DATASHEET

milliK

Isotech

Distributed by AKRIBIS

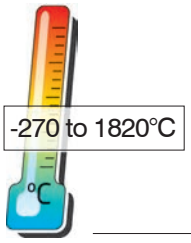

Precision Thermometer
milliK

- Wide Range of Sensors, SPRTs, PRTs, Thermistors, Thermocouples and 4-20mA Transmitters
- High Accuracy, < ±5ppm for PRTs, ±2μV for Thermocouples and ±1μA for Transmitters
- Logs and Controls Isotech Temperature Sources Massive logging capacity - supports Dry Blocks and Liquid Baths

The milliK Precision Thermometer from Isotech sets a new standard for the high accuracy measurement and calibration of Platinum Resistance Thermometers, Thermistors, Thermocouples and Process Instrumentation (4-20mA) over the range -270°C to 1820°C.

In addition to low uncertainty measurements from Reference Standards and Industrial sensors, the milliK can control Isotech temperature sources, sequencing through a programmable list of temperature set points and log data to internal memory or a USB drive.

The milliK has two input channels for sensors and a third channel for current. It can be expanded to become a measuring system with up to 33 channels reading SPRTs, RTDs, Thermistors, or Thermocouples with the option to control calibration baths and log readings accurately.

Benefiting You

The milliK sets a new standard for value, versatility and accuracy - < ±5ppm over range for PRTs, ±2μV for Thermocouples and ±1μA for current transmitters, see table.

Supporting a wide range of sensors and functions it replaces individual devices making it a cost effective calibration solution.

A robust design and operation from AC or DC power allows the milliK to be used in the laboratory, test room or out in the field.

The milliK can display in °C, °F, K, Ohms, mV and mA with numeric and graphical display modes. The large back lit display makes configuring the instrument and setting the scrolling strip charts intuitive. The USB port allows for the use of a mouse, keyboard or USB Drive.

Built on World Leading Technology

In 2006 Isotech launched the microK range of thermometry bridges which quickly established themselves as the instrument of choice for National Metrology Institutes and Primary Laboratories with innovative features, accuracy and versatility.

In response to industry demands for greater accuracy, the milliK now brings the same design philosophy used in the microK to those outside the Primary Laboratory. Users calibrating industrial sensors in the laboratory, pharmaceutical plants, food and beverage plants, aerospace, power industries and service companies will welcome the milliK as a solution to increase measurement confidence, ensure high accuracy traceable calibration, improve quality as well as ensure safety and lower energy consumption.

The Isotech milliK
High Accuracy Measurement
Controls Calibration Baths
Logs Data

No Compromise Design

The design team have considered industrial users and applications in order to avoid measurement errors and problems encountered in some instruments from other manufacturers:

- **Eliminates Thermal EMF Errors in PRTS**
  Fast current reversal technology and solid state switching eliminate thermal EMF effects avoiding the errors that occur with fixed DC instruments.
- **Lead Wire Correction**
  PRT lead wire errors are eliminated for up to 30m of four core screened cable. Also supports lead wire correction for three wire PRTs.
- **Galvanic Isolation**
  Not only are the two sensor channels galvanically isolated, the 4 - 20mA input is also separately isolated. The benefits of the advanced design are no ground loops, improved safety and noise immunity.

High Resolution

The display resolution is 0.0001°C (0.1mK) made possible by using a powerful Sigma Delta Analogue to Digital converter to achieve a true measuring resolution of just 28μΩ equivalent to 0.00007°C (0.07mK) for PRT inputs.

Expandable

The millisKanner adds eight channels, and each can be configured individually as a SPRT, PRT, Thermistor or Thermocouple input. A maximum of four millisKanners can be added, providing up to 32 channels - all controlled from the milliK touch screen or an RS232 connection.

AKRIBIS · www.akribis.info · contacto@akribis.info

Reliable
Like the award winning microK range, the milliK is all solid state. There are no mechanical relays, switches or potentiometers which would reduce reliability.

Input Connectors
No compromise design ruled out lower cost problematic connectors and the SPRT / PRT inputs are via the highest quality gold plated push / pull self latching circular connectors overcoming the problems seen elsewhere where thermometers have been designed to a budget.

Outstanding CJC Performance and Flexibility
Again, the no compromise design philosophy led to a specially developed rugged thermocouple connector made from alumina and incorporating a digital temperature sensor for optimal cold junction accuracy.

Three CJC modes allow thermocouple operation with internal automatic compensations, external 0°C reference systems or the milliK can measure the junction with a probe on an unused channel, useful for automated systems.

21st Century Design
Utilising a powerful internal operating system and fast 32 Bit processor the milliK has the power and capacity to overcome the memory limitations of older instruments.

Store Probe Data
There is sufficient memory for an almost unlimited number of standard probes, allowing the storing of calibration data for both resistance thermometers and thermocouples. The digital matching of probe data allows the instrument to show the true temperature. The instrument will warn if a probes calibration time has expired.

Data Logging
Older instruments are limited to a maximum number of logged data points, the milliK is limited only by storage space. The internal memory can store more than six months of data, and with a low cost USB Memory stick the milliK can log continuously for a lifetime

Data Management
Probe data and logged measurements can be exported to a USB Memory drive at the push of a button. Additionally, the instrument is future proof with future software updates applied from a USB drive.

Connectivity and Communications
With USB host, two serial interfaces and Ethernet it is easy to communicate with the milliK whether it is on the bench next to a PC or remotely using a LAN or WAN connection. These interfaces are fitted as standard.

The milliK includes a PC lead and software.

Open Calibration
The milliK is readily calibrated against resistance and voltage standards. There are no internal adjustments and the calibration commands are simply sent via RS232 or from the front panel (password protected). The procedure is open and fully documented unlike some other instruments where there is no choice but to return to the manufacturer.

1 *The milliK can connect to Isotech temperature sources*

Dry Blocks (Basic & Site only), Liquid Baths and Furnaces

Can cycle the bath through a series of temperatures logging the data - all without a PC.

2 *Wide range of sensors*

The milliK can use Standard Reference probes and read from industrial sensors being calibrated, including 4 - 20mA transmitters - all to high accuracy.

3 *Expandable*

The milliK can be expanded to have a maximum of 33 high accuracy channels. The millisKanner has eight expansion channels, with each channel configurable for SPRT, PRT, Thermistor or Thermocouple input type.

4 *Logs*

The milliK can record time stamped data to internal memory or a USB Memory Drive.

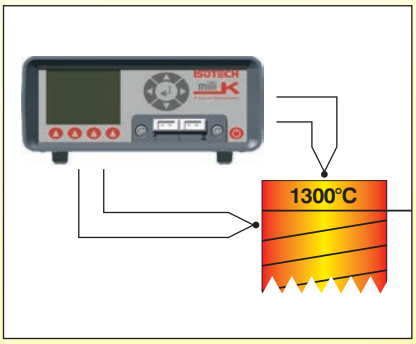

5 *Safety*

The milliK inputs are galvanically isolated, with the 4 - 20mA input separately isolated avoiding problems with high voltage pick up common when using thermocouples in high temperature furnaces.

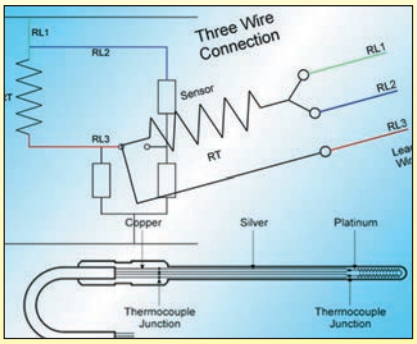

6 *Designed to eliminate and protect against real world problems*

The milliK eliminates thermal EMF errors, compensates for lead wire resistance and warns if a probe is out of calibration.

AKRIBIS · www.akribis.info · contacto@akribis.info

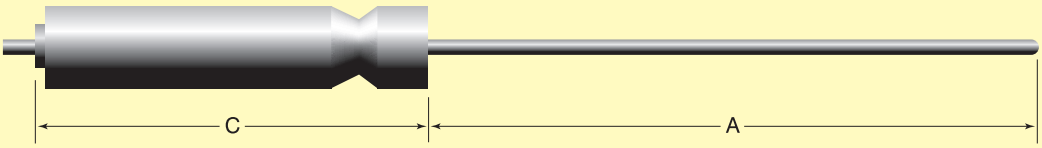

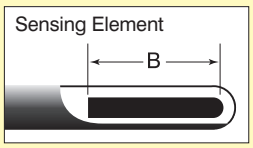

■ **Recommended** Probes (Fit milliK Case)

Model	Maximum Range	Diameter	Length (A)	Sensing Length (B)	Handle (C)	Cable	Application
935-14-61/TTI	-50°C to 250°C	4mm	300mm	6mm	19 x 120mm	2m PTFE	Fast Response, Low Stem Conduction
935-14-116/TTI	-100°C to 450°C	6mm	350mm	25mm	19 x 120mm	2m PTFE	General Purpose

For further options and details, see Reference Probes - Semi Standards, pages 76-81.
For laboratory standard thermometers we recommend for SPRTs the Isotech Model 909Q and for thermocouples the Model 1600 Type R, see Catalogue 1: Solutions from Primary & Secondary Laboratories.

Optional Carrying Case
Part number: 931-22-102

- The choice for high accuracy temperature measurement - expandable for multi-channel operation
- Higher Accuracy than DAQ Systems
- Ideal for industrial sensor calibration alongside Dry Block and Liquid Baths.
- Expandable to 33 channels with no loss of accuracy

milliK shown with optional channel expander

UKAS CALIBRATION 0175

UKAS Calibration available for these systems - *International Traceability - Best Practice*

AKRIBIS · www.akribis.info · contacto@akribis.info

Specifications

Input Channels	3	
Channels 1+2	SPRTs, PRTs, Thermistor and Thermocouples	
Channel 3	Process Inputs 4 - 20mA Isolated 24VDC Power Supply Included	
Ranges	SPRTs:	0-115Ω
	PRTs:	0-460Ω
	Thermistors:	0-500kΩ
	Thermocouples:	±115mV
	4-20mA:	0-30mA
Display Units	°C, °F, K, Ω, mV, mA	

Accuracy	Initial	Over 1 year
SPRTs/PRTs:	5ppm	7ppm
Thermistors:	50ppm	150ppm
Thermocouples:	2μV	4μV
4-20mA:	0.01%	0.02%

Temperature Accuracy	Initial	Over 1 year
SPRTs/PRTs (at 0°C):	3mK	4mK
(over full range):	5mK	7mK
Thermistors:	50ppm	150ppm

Thermocouples:	Ice Point Ref		Internal CJC	
	Initial	1 Year	Initial	1 Year
Type B @ 1000°C	±0.12°C	±0.14°C	±0.12°C	±0.14°C
Type E @ 600°C	±0.02°C	±0.05°C	±0.10°C	±0.20°C
Type J @ 600°C	±0.03°C	±0.05°C	±0.12°C	±0.23°C
Type K @ 600°C	±0.04°C	±0.06°C	±0.13°C	±0.25°C
Type L @ 600°C	±0.03°C	±0.05°C	±0.12°C	±0.23°C
Type N @ 600°C	±0.04°C	±0.06°C	±0.10°C	±0.19°C
Type R @ 1000°C	±0.09°C	±0.12°C	±0.14°C	±0.21°C
Type S @ 1000°C	±0.10°C	±0.14°C	±0.16°C	±0.24°C
Type T @ 200°C	±0.02°C	±0.03°C	±0.10°C	±0.18°C
Au-Pt @ 600°C	±0.06°C	±0.08°C	±0.10°C	±0.15°C

Resolution	Resistance (PRTs):	0.00001Ω
	(Thermistors):	0.001Ω
	Voltage:	0.00001mV
	Current:	0.001mA
	Temperature:	0.0001°
Temperature Conversions	PRTs:	IEC60751(2008), Callendar-van Dusen, ITS90
	Thermocouples:	IEC584-1 1995 (B,E,J,K,N,R,S,T), L, Au-Pt
	Thermistors:	Steinhart-Hart, polynomial
Sensor Currents	SPRTs/PRTs:	1mA and 1.428mA ±0.4% (reversing)
	Thermistors:	5μA (reversing)
Keep-Warm Current	SPRTs/PRTs:	1mA and 1.428mA

Input Connectors	SPRTs/PRTs:	LemoEPG.1B.306. HLN 6-pin gold plated contacts
	Thermocouples:	Miniature Thermocouple socket (ASTM E 1684-05)
	4-20mA:	4mm sockets
Interfaces	10/100MBit Ethernet (RJ45 socket) USB (2.0) host 2 x RS232 (9-pin D-type plug, 9600 Baud)	
Display	89mm / 3.5” QVGA (320 x 240) colour TFT LCD with LED backlight	
Operating Conditions	Operating:	0-45°C / 32-113°F, 0-99% humidity
	Full Specification:	15-30°C / 50-85 °F, 10-90% humidity
Statistics	In Addition to Instantaneous Display user can select mean of 2 - 100 measurements with Standard Deviation	
Measurement Time	PRTs (4-wire): 0.4s (3-wire): 0.7s Thermistors: 0.4s Thermocouples (ice point): 0.4s (internal CJC): 0.7s (external CJC): 1.0s	
Cable Length	Limited to 10Ω per core and 10nF shunt capacitance (equivalent to 100m of typical 4-core screened PTFE cable)	
Logging	Capacity to store > 180 Days of time stamped measurements to internal memory	
Recommended Probes	Isotech Semi Standard PRTs Isotech Model 909 SPRT	
Power	88-264V (RMS), 47-63Hz (universal), 6W maximum or 4 x AA cells	
Dimensions	255mm x 255mm x 114mm / 10” x 10” x 4.5” (W x D x H)	
Weight	2.25kg / 5lb	
Optional Carring Case	931-22-102	

***NOTE**: Due to our program of continual development and improvement, we reserve the right to amend or alter characteristics and design without prior notice.*

AKRIBIS · www.akribis.info · contacto@akribis.info