USER GUIDE

XMW85

Vaisala · Authorized Partner

Distributed by AKRIBIS

M213257EN-B

User Guide

Carbon Dioxide, Humidity, and Temperature Transmitters

XMW85

VAISALA

AKRIBIS · www.akribis.info · contacto@akribis.info

PUBLISHED BY

Vaisala Oyj
Vanha Nurmijärventie 21, FI-01670 Vantaa, Finland
P.O. Box 26, FI-00421 Helsinki, Finland
+358 9 8949 1
vaisala.com
docs.vaisala.com

© Vaisala 2026

No part of this document may be reproduced, published, or publicly displayed in any form or by any means, electronic or mechanical (including photocopying), nor may its contents be modified, translated, adapted, sold, or disclosed to a third party without prior written permission of the copyright holder. Translated document and translated portions of the document are based on the original English version. Parts of the translation may have been created using machine-assisted translation. In ambiguous cases, the English version is applicable, not the translation.

The contents of this document are subject to change without prior notice.

Local rules and regulations applicable to the products and services may vary, and they shall take precedence over the information contained in this document. Vaisala makes no representations on this document's compliance with the local rules and regulations applicable at any given time, and hereby disclaims any and all responsibilities related thereto. You are instructed to confirm the applicability of the local rules and regulations and their effect on the intended use of the products and services.

This document does not create any legally binding obligations for Vaisala towards customers or end users. All legally binding obligations are set forth exclusively in the applicable contract or in the relevant set of General Conditions of Vaisala (vaisala.com/policies).

This product contains software developed by Vaisala or third parties. Use of the software is governed by license terms and conditions included in the applicable contract or, in the absence of separate license terms and conditions, by the General License Conditions of Vaisala Group.

Table of contents

1. About this document ... 7
1.1 Version information ... 7
1.2 Documentation conventions ... 7
1.3 Trademarks ... 7
1.4 Patent notice ... 8

2. Product overview ... 9
2.1 Introduction to XMW85 ... 9
2.2 Transmitter parts ... 11
2.3 Display ... 12
2.3.1 Startup screens ... 12
2.3.2 Measurement screen ... 13
2.3.3 Error message screen ... 14
2.4 Safety ... 14

3. Installation ... 15
3.1 Selecting location ... 15
3.2 Opening and closing the transmitter ... 16
3.3 Wiring ... 18

4. Modbus communication ... 21

5. Maintenance ... 23
5.1 Cleaning ... 23
5.2 Replacing the CO_2 measurement module (GM10) ... 23
5.3 Replacing the INTERCAP humidity sensor ... 24

6. Troubleshooting ... 26
6.1 Solving typical problems ... 26
6.2 Error messages on display ... 27
6.3 Modbus communication in error state ... 28

7. Technical data ... 29
7.1 XMW85 specifications ... 29
7.2 Spare parts and accessories ... 32
7.3 XMW85 dimensions ... 33

8. Vaisala services ... 34
8.1 Service centers ... 34
8.2 Technical support ... 34
8.3 Warranty ... 34

Appendix A: Modbus reference ... 35
A.1 Function codes ... 35

A.2 Data encoding.....35
A.2.1 32-bit floating point format.....35
A.2.2 16-bit integer format.....36
A.3 Modbus registers.....36
A.3.1 Measurement data registers.....36
A.3.2 Status registers.....37
A.3.3 Test value registers.....38
A.4 Modbus communication example.....39
A.5 Device identification objects.....40

Online store.....41

Recycling.....41

List of figures

Figure 1 XMW85 series transmitter parts....11
Figure 2 XMW85 series component board parts inside the transmitter cover....12
Figure 3 Example startup screens....13
Figure 4 Example measurement screens....13
Figure 5 Example error message on display....14
Figure 6 Examples of good installation locations....15
Figure 7 Examples of unsuitable installation locations....16
Figure 8 Wiring for XMW85....18
Figure 9 Routing cable from behind....19
Figure 10 Locations of breakaway tabs....20
Figure 11 Wiring from below with cable tie strain relief....20
Figure 12 XMW85 component board with DIP switches and screw terminals....21
Figure 13 Modbus device address DIP switch example....22
Figure 14 Disconnecting GM10 module....24
Figure 15 Dimensions of XMW85....33

List of tables

Table 1 Document versions (English) 7
Table 2 Applicable patents or applications 8
Table 3 XMW85 transmitter models 9
Table 4 Output parameters 10
Table 5 Troubleshooting table 26
Table 6 Error messages on display 27
Table 7 Measurement performance of XMW85 RH & T models 29
Table 8 Measurement performance of XMW85 CO_2, RH & T models 29
Table 9 XMW85 operating environment 30
Table 10 XMW85 inputs and outputs 31
Table 11 XMW85 mechanical specifications 31
Table 12 XMW85 compliance 32
Table 13 Spare parts and accessories 32
Table 14 Modbus function codes 35
Table 15 Interpretation of 16-bit signed integer values 36
Table 16 Modbus measurement data registers, metric (read-only) 36
Table 17 Modbus measurement data registers, non-metric (read-only) 37
Table 18 Modbus status registers (read-only) 37
Table 19 Modbus test registers (read-only) 38
Table 20 Device identification objects 40

1. About this document

1.1 Version information

This document provides instructions for using and maintaining Vaisala XMW85 transmitters.

Table 1 Document versions (English)

Document code	Date	Description
M213257EN-B	February 2026	Updated content in this version: • Measurement range and operating temperature range for RH & T models updated in XMW85 specifications (page 29). • Information about Vaisala services added.
M213257EN-A	September 2025	First version.

1.2 Documentation conventions

WARNING! Alerts you to a hazardous situation that, if not avoided, could result in death or serious injury.

CAUTION! Alerts you to a hazardous situation that, if not avoided, could result in minor or moderate injury.

NOTICE! Alerts you to a situation that, if not avoided, could result in the product to be damaged, or important data to be lost.

Highlights important information on using the product.

1.3 Trademarks

Vaisala®, CARBOCAP®, and INTERCAP® are registered trademarks of Vaisala Oyj.

Modbus® is a registered trademark of Schneider Automation Inc.

All other product or company names that may be mentioned in this publication are trade names, trademarks, or registered trademarks of their respective owners.

1.4 Patent notice

This product is protected by the following patents and patent applications and their corresponding national rights:

Table 2 Applicable patents or applications

Issuing office	Patent number
United States Patent and Trademark Office	US 9,733,404
	US 12,007,349
European Patent Office	EP2893770
	EP4102393
Japan Patent Office	JP7356486
Chinese Patent Office	CN114624296

2. Product overview

2.1 Introduction to XMW85

Vaisala XMW85 is a configurable Modbus RTU transmitter designed for standard demand-controlled ventilation (DCV) and indoor air quality monitoring (IAQ). It is available in two models: 3- in-1 (CO_2, humidity, and temperature), and 2-in-1 (humidity and temperature). The optional local display shows temperature in metric or non-metric units.

Table 3 XMW85 transmitter models

Model	Measurements	Display	Units on display
XMW85H	Relative humidity Temperature	—	—
XMW85HD	Relative humidity Temperature	Yes	%RH °C
XMW85HE	Relative humidity Temperature	Yes	%RH °F
XMW85G	Carbon dioxide Relative humidity Temperature	—	—
XMW85GD	Carbon dioxide Relative humidity Temperature	Yes	ppm %RH °C
XMW85GE	Carbon dioxide Relative humidity Temperature	Yes	ppm %RH °F

The following features are provided by the XMW85 transmitters:

- Reliable transmitters with Modbus RTU support over RS-485.
- User-exchangeable INTERCAP sensor for easy field replacement.
- Field-replaceable GM10 CO_2 module for simple field service.
- Excellent stability with the advanced proprietary CARBOCAP technology.
- Optimized for easy installation and low maintenance.

The XMW85 transmitters can be accessed with the Modbus RTU protocol over an RS-485 interface. The communication settings for the protocol are entered with DIP switches on the component board.

Table 4 Output parameters

Parameter	Symbol	Unit(s)	Description
Relative humidity	RH	%	Ratio of the partial pressure of water vapor in the air to the saturation vapor pressure of air at the current temperature.
Temperature	T	°C, °F	Temperature in Celsius or Fahrenheit scale.
Carbon dioxide	CO_2	ppm	Concentration of carbon dioxide gas (CO_2).

All XMW85 models measure relative humidity (RH) and temperature (T). Humidity measurement uses the Vaisala INTERCAP humidity sensor. If necessary, the INTERCAP sensor can be easily exchanged in the field with practically no downtime.

The XMW85G, XMW85GD, and XMW85GE models measure also carbon dioxide (CO_2).

The CO_2 measurement is based on the Vaisala proprietary CARBOCAP sensor, which uses a silicon-based microchip emitter instead of an incandescent light bulb. The internal reference in the CO_2 sensor guarantees the best stability and operation also in constantly occupied buildings without frequent readjustments.

CARBOCAP sensors give correct CO_2 measurements immediately when powered on. As they have a built-in reference measurement, they do not need a lengthy learning phase before the measured values are correct. Proper operation can be verified immediately after snapping on the device cover.

2.2 Transmitter parts

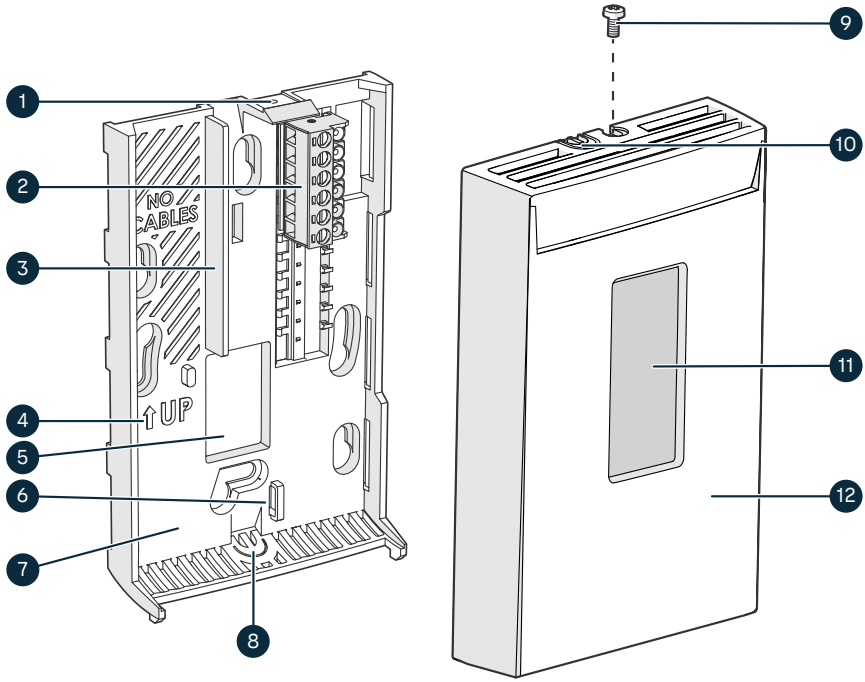

Figure 1 XMW85 series transmitter parts

1 Opening tab
2 Screw terminals. Wiring information is marked on the mounting base next to the terminals.
3 Barrier to prevent the cable from being routed below the GM10 measurement module. The area to avoid is marked **NO CABLES** on the mounting base.
4 Orientation arrow. Should point up after mounting base has been installed.
5 Opening for cable when wiring from behind (recommended)
6 Place for cable tie (optional, for cable strain relief)
7 Mounting base
8 Breakaway tab for routing the cable from below
9 Locking screw. Supplied with the transmitter.
10 Breakaway tab for routing the cable from above
11 Display (on models with the letter D and E)
12 Transmitter cover, including component board (see also Figure 2 (page 12))

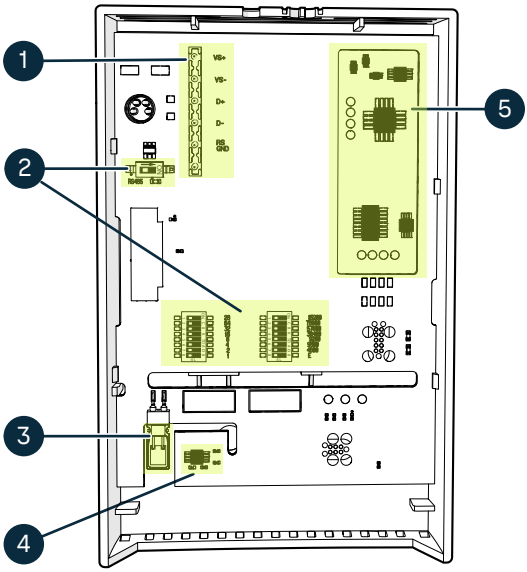

Figure 2 XMW85 series component board parts inside the transmitter cover

1 Pins connecting the transmitter cover to the screw terminals when the transmitter cover is in place
2 DIP switches for Modbus settings
3 Vaisala INTERCAP humidity sensor
4 Active temperature sensor
5 GM10 carbon dioxide measurement module

More information

- Wiring (page 18)

2.3 Display

The XMW85 transmitters with the letter **D** or **E** in the model name (for example, XMW85GD) are equipped with a display.

2.3.1 Startup screens

When an XMW85 transmitter with a display is powered on, it shows first the Vaisala splash screen and then the info screen. The startup screens are shown for a few seconds each.

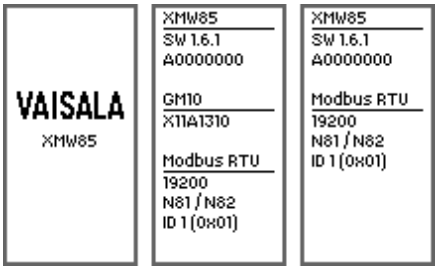

Figure 3 Example startup screens

The info screen shows the following information:

- Transmitter model, software version, and serial number.
- In 3-in-1 models only: serial number of the connected GM10 CO_2 measurement module. If the module is disconnected, no serial number is shown.
- Modbus settings that have been selected with the DIP switches (serial bit rate, parity, number of data bits, number of stop bits, and product code).

2.3.2 Measurement screen

After the startup screens the transmitter shows the measurement screen, displaying the measured parameters. If the device is equipped with an CO_2 measurement module, the screen shows also an air quality indicator based on the current CO_2 level.

- **Good** air quality: 0–800 ppm CO_2
- **Fair** air quality: 800–1200 ppm CO_2
- **Poor** air quality: > 1200 ppm CO_2

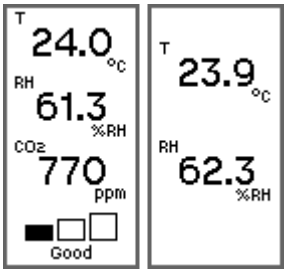

Figure 4 Example measurement screens

The models with the letter D display the temperature measurement data in Celsius scale. The models with the letter E in the name display the temperature measurement in Fahrenheit scale.

2.3.3 Error message screen

If there is a problem with a measurement, the affected readings are replaced with dashes. The alarm indicator and an error message also appear on the screen. If more than one error is active, the display cycles through the errors, showing each error for a few seconds.

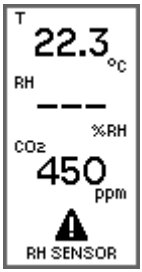

Figure 5 Example error message on display

More information

- Solving typical problems (page 26)
- Error messages on display (page 27)

2.4 Safety

The XMW85 transmitter delivered to you has been tested for safety and approved as shipped from the factory. Note the following precautions:

CAUTION! Electricity hazard
Handling energized wires can cause electric shock. Prepare or connect only de-energized wires.

CAUTION! Modification of the product can result in injury or damage the product. Do not modify the product or substitute parts unless instructed to do so. Improper modification voids your warranty.

Electrostatic Discharge (ESD) can cause immediate or latent damage to electronic circuits. Avoid touching exposed component contacts during installation and maintenance.

3. Installation

3.1 Selecting location

Select a location that represents well the area of interest. Interior walls and columns are typically suitable locations. The installation height should be 1.2–1.8 m (4–6 ft).

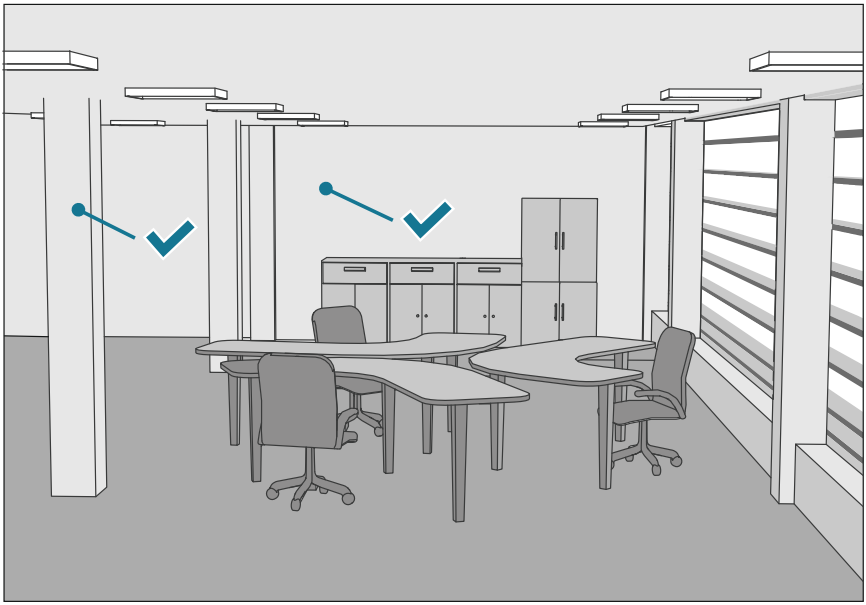

Figure 6 Examples of good installation locations

Seal the cable opening when leading a cable through the wall. The hole will supply air from outside the room into the transmitter and affect the measurement readings. For example, fresh concrete binds CO_2 and may cause low readings, especially in new buildings.

Avoid installing in the following locations:

- Near doors or windows.
- Near heat and moisture sources.
- In direct sunlight.
- In locations that are blocked by furniture.
- Close to the discharge of supply air ducts.
- On the floor or the ceiling.
- On points that experience excessive vibration.

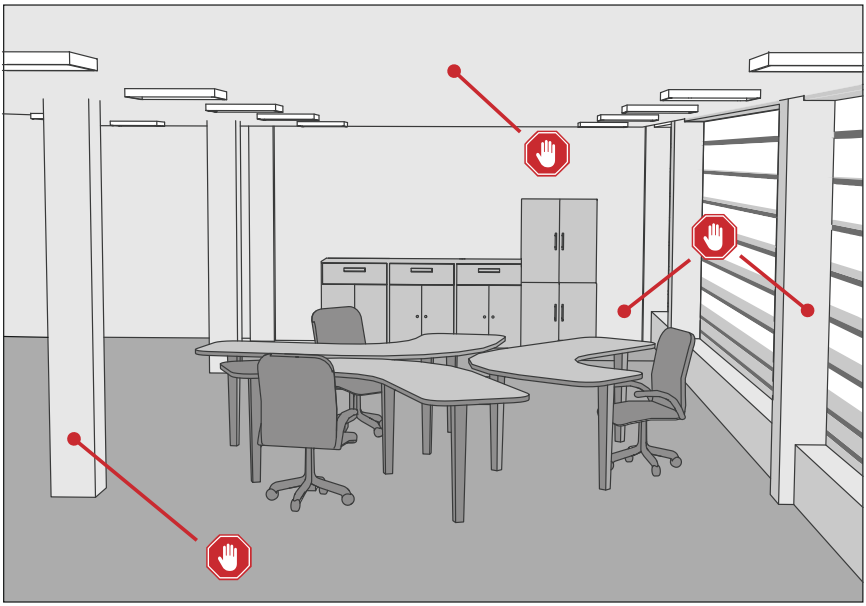

Figure 7 Examples of unsuitable installation locations

3.2 Opening and closing the transmitter

The XMW85 transmitters are delivered from the factory with a pull tab that makes it easy to open the transmitter for installation.

1. To open the transmitter after it has been installed:
   a. Loosen the locking screw if it has been installed.
   b. Use a flat screwdriver to push down the opening tab that holds the transmitter cover and mounting base together, and pull the top of the transmitter cover away from the mounting base.

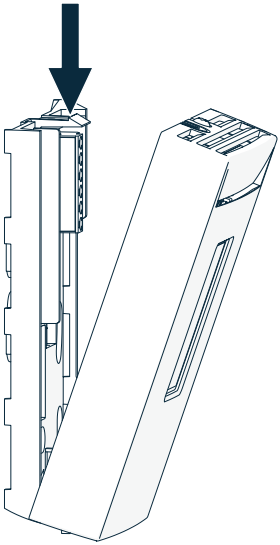

NOTICE! Be careful when opening the transmitter:
- Pushing down too hard can break off the opening tab.
- Inserting the screwdriver too far into the transmitter enclosure may damage transmitter components.

2. To close the transmitter:
   a. Align the bottom of the cover with the bottom of the mounting base.
   b. Tilt the top of the cover forward until the tab catches with an audible snap. Note that closing the transmitter starts it up if power is supplied to the screw terminals.
   c. Pull on the cover gently to make sure it is properly closed.
   d. Attach the locking screw if desired.

3.3 Wiring

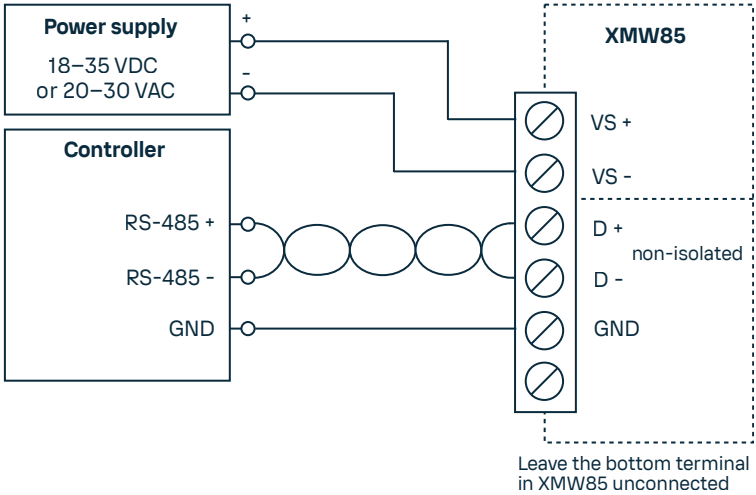

Figure 8 Wiring for XMW85

Connect the wiring to the screw terminals on the mounting base. The terminal assignments are marked next to the screw terminals. Do not connect wiring to unmarked terminals.

Note that the RS-485 ground terminal is internally connected to the power supply ground terminal. Use a floating power supply or a separate RS-485 isolator device if ground loops cause problems.

Because there is no built-in isolation, connect the common grounding wire (in addition to the signal pair) between the RS-485 controller and XMW85 (terminal ground).

CAUTION! Leaving the grounding wire disconnected can result in non-functioning communications and even damage the device if there is large ground potential difference.

Maximum wire size is 1.5 mm^2 (16 AWG). Route the cable through the hole in the mounting base if possible.

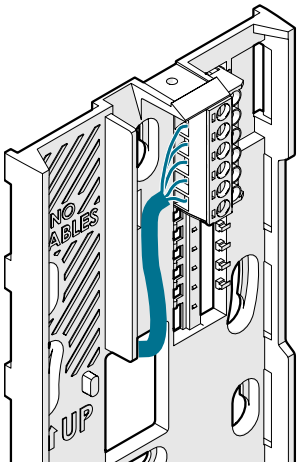

Figure 9 Routing cable from behind

CAUTION! Electricity hazard
Handling energized wires can cause electric shock. Prepare or connect only de-energized wires.

NOTICE! If the transmitter has a CO_2 measurement module, do not route the cable through the area marked **NO CABLES** on the mounting base. That space is taken up by the CO_2 measurement module when the transmitter cover is attached.

You can also bring the cable to the housing from above or below, but you have to break off the small plastic tab that covers the hole on top or bottom of the housing.

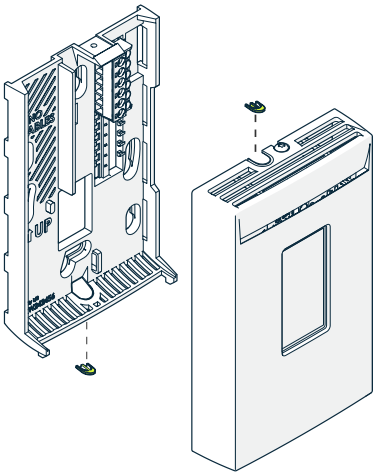

Figure 10 Locations of breakaway tabs

When wiring from below, you can secure the cable with a cable tie to provide strain relief.

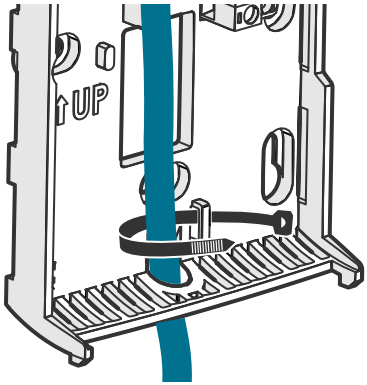

Figure 11 Wiring from below with cable tie strain relief

After completing the wiring, connect the transmitter cover to the mounting base. Note that closing the transmitter starts it up if power is supplied to the screw terminals.

More information

- Transmitter parts (page 11)

4. Modbus communication

The Modbus variant used in XMW85 is Modbus RTU.

You can use up to 8 transmitters on the same RS-485 line. You must configure each transmitter on the line to have a different Modbus address.

> Before taking the transmitter into use, check that the Modbus device address, bit rate setting, and parity setting match the settings in your system.
> The number of stop bits is not significant. The device supports automatically both 1 and 2 stop bits.

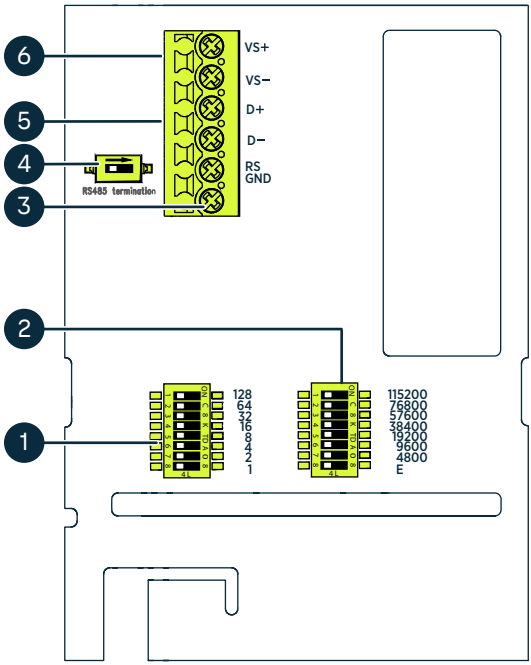

Figure 12 XMW85 component board with DIP switches and screw terminals

1. DIP switches for setting the XMW85 Modbus device address
2. DIP switches for selecting Modbus communication bit rate and parity (None/Even). Bit rates 76800 and 115200 are not supported.
3. Screw terminal not used in XMW85
4. DIP switch for 120 Ω RS-485 bus termination. Switch RS-485 bus termination **ON** only on the last device of the wiring if there is no separate terminator on the bus.
5. RS-485 (Modbus) screw terminals
6. Power supply input (18–35 V DC or 20–30 V AC) screw terminals

Make selections with the DIP switches by sliding the DIP switch to the right (**ON**). Keep the other DIP switches on the left position (**OFF**).

Setting Modbus device address with DIP switches

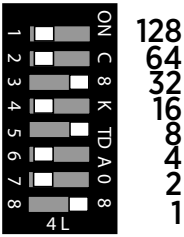

Figure 13 Modbus device address DIP switch example

DIP switches 32, 8, and 1 set to ON	The Modbus device address is encoded in eight bit binary form, with each numbered switch representing a single bit. This example shows address 41 selected: DIP switches 32, 8, and 1 (decimal: 41, binary: 00101001) are set to **ON**.

Modbus device address ranges

The Modbus device address range for the transmitter is 1–247. Up to 255 is possible, but non-standard.

If no address is selected (0), the device is offline and will not respond to any Modbus requests.

More information

- Modbus registers (page 36)

5. Maintenance

5.1 Cleaning

The housing of the transmitter can be cleaned by wiping with a moistened lint-free cloth. Do not use cleaning agents or solvents, or blow pressurized air into the transmitter housing.

If you suspect the CO_2 measurement module is dirty, do not attempt to open it. Instead, replace it with a new part.

More information

- Spare parts and accessories (page 32)

5.2 Replacing the CO_2 measurement module (GM10)

- GM10 spare part module (Vaisala item code GM10SP80)
- Flat head screwdriver (for opening the transmitter)

To replace the module:

1. Disconnect the transmitter cover from the mounting base.
2. Locate the GM10 module in the transmitter. The module is a separate component board with a golden cuvette that contains the CARBOCAP sensor. The module is connected to the main transmitter board with a connector, and held in place by a plastic clip on the other side.

3. Disconnect the module by carefully lifting it from the connector side.

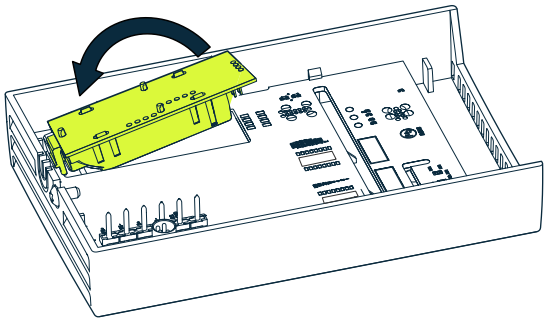

Figure 14 Disconnecting GM10 module

4. Take the new GM10 module and place it in the opening for the module so that the plastic clip meets the component board. Then lower the connector end of the module in place.
5. Push down on the module to secure the connector.
6. Reconnect the transmitter to the mounting base.
7. Check the output of the transmitter (or the display if included on the model) to verify that the CO_2 measurement is working normally and is not in error state.

More information

- Transmitter parts (page 11)
- Modbus communication in error state (page 28)

5.3 Replacing the INTERCAP humidity sensor

- INTERCAP® sensor (Vaisala item code 15778HM)
- Flat head screwdriver (for opening the transmitter)

NOTICE! To avoid contaminating or damaging the sensor:
- Handle the sensor by its plastic frame.
- Do not touch the sensor surface in the middle.
- Wear lint-free ESD gloves.

To replace the sensor:

1. Disconnect the transmitter cover from the mounting base.

2. Locate the INTERCAP sensor on the component board.
3. Disconnect the old INTERCAP sensor by pulling it straight out of its socket.

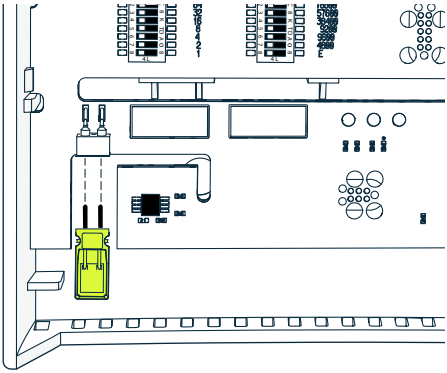

4. Insert the new INTERCAP sensor in the socket.
5. Reconnect the transmitter cover to the mounting base.
6. Check the output of the transmitter (or the display if included on the model) to verify that the humidity measurement is working normally and the transmitter is not in error state.

More information

- Transmitter parts (page 11)
- Modbus communication in error state (page 28)

6. Troubleshooting

6.1 Solving typical problems

If you experience problems with XMW85 transmitters, first see the following table concerning the behavior and error indications of the transmitter. If you cannot locate the source of the error and return the transmitter to operational state, contact Vaisala.

Table 5 Troubleshooting table

Problem	Solution
The device is not responding	• Power-cycle the XMW85 transmitter by detaching the transmitter cover. • Check the power supply voltage. • Check wiring, including RS-485 bus polarity. • Check that the grounding wire is connected between the transmitter and the controller. • Compare the DIP switch settings to your Modbus host settings. • Check that RS-485 termination is enabled only on the last device of the wiring. • Alternatively, try operation without RS-485 termination at all.
Display shows 1 or more error codes.	Check meaning of the error code(s) and proceed accordingly.
Unexpected value in Modbus response	Change the register number and/or data encoding settings in your Modbus host system.
No CO_2 measurement result and/or non-zero status code returned	1. Device is warming up, try again after 20 seconds. 2. Power-cycle the transmitter by disconnecting the screw terminal block from the mounting base. 3. Check that the CO_2 measurement module (GM10) is properly attached. 4. Contact Vaisala for a replacement GM10 module.
RS-485 port is offline. Display shows invalid bit rate "1" on the info screen and no error code.	Check that you have selected only one Modbus communication bit rate with the DIP switches.

More information

- Transmitter parts (page 11)
- Error messages on display (page 27)
- Technical support (page 34)

6.2 Error messages on display

Table 6 Error messages on display

Error message	Possible cause	Solution
CO_2 SENSOR	CO_2 measurement module (GM10) is disconnected.	Open the transmitter and check if the module is installed securely. • If the module is loose or entirely disconnected, reinstall it. • If the module appears to be installed but the problem persists, disconnect and reconnect the module carefully.
	CO_2 measurement module (GM10) must be replaced.	Replace the module with a verified working module.
	CO_2 reading is over 6000 ppm.	• Use a portable instrument to verify the CO_2 reading at the installation location. Avoid breathing on the instruments while checking. • Check for sources of CO_2 in the measured area, such as people working right next to the transmitter.
RH SENSOR	Humidity sensor is disconnected.	Open the transmitter and check the condition of the humidity sensor. • If the sensor is missing or damaged, replace it. • If the sensor is wet, wait for it to dry or dry it very gently with clean instrument air.
	Humidity sensor is damaged.	
	Humidity sensor is wet.	
T SENSOR	Temperature reading is outside the scaled output range.	1. Verify the ambient temperature with a portable instrument. 2. Open the transmitter and check if the active temperature sensor on the component board has been damaged. 3. If the error persists, contact Vaisala support.
	Temperature sensor is damaged.	
INTERNAL	Problem with transmitter software.	1. Restart the transmitter. 2. If the error persists, contact Vaisala support.
OFFLINE	Address 0 is selected on the DIP switches and the Modbus functionality is disabled.	Select a unique Modbus address on the DIP switches.

More information

- Modbus communication (page 21)
- Replacing the CO2 measurement module (GM10) (page 23)

‣ Replacing the INTERCAP humidity sensor (page 24)

6.3 Modbus communication in error state

If the transmitter detects a serious hardware or software error, each affected parameter register returns the Not-A-Number (NaN) value on Modbus, or value 32768 (0x8000) on integer-type registers.

Examples of situations that may cause the error state:

- The transmitter measures over 6000 ppm CO_2.
- The CO_2 measurement module (GM10) is disconnected.

7. Technical data

7.1 XMW85 specifications

Table 7 Measurement performance of XMW85 RH & T models

Property	Description/Value
Relative humidity	
Measurement range	0–100 %RH
Accuracy:	
in temperature range +10 ... +30 °C (+50 ... +86 °F)	±3 %RH (0–70 %RH) ±5 %RH (70–100 %RH)
in temperature range −5 ... +10 °C, +30 ... +55 °C (+23 ... +50 °F, +86 ... +131 °F)	±7 %RH (0–100 %RH)
Stability in typical HVAC applications	±2 %RH over 2 years
Humidity sensor	Vaisala INTERCAP®
Temperature	
Measurement range	−20 ... +70 °C (-4 ... +158 °F)
Accuracy:	
at +10 ... +30 °C (+50 ... +86 °F)	±0.5 °C (±0.9 °F)
at −5 ... +10 °C, +30 ... +55 °C (+23 ... +50 °F, +86 ... +131 °F)	±1.0 °C (±1.8 °F)
Temperature sensor	Digital temperature sensor

Table 8 Measurement performance of XMW85 CO_2, RH & T models

Property	Description/Value
Carbon dioxide	
Measurement range	0–2000 ppm
Accuracy: [1)]	
at +20 ... +30 °C (+68 ... +86 °F)	±(30 ppm +3 % of reading)
at +10 ... +20 °C (+50 ... +68 °F) and +30 ... +40 °C (+86 ... +104 °F)	±(35 ppm +3.7 % of reading)
at +0 ... +10 °C (+32 ... +50 °F) and +40 ... +50 °C (+104 ... +122 °F)	±(40 ppm +4.8 % of reading)

Property	Description/Value
Stability in typical HVAC applications	±(15 ppm +2 % of reading) over 5 years
Warm-up time	1 min 10 min for full specification
Response time (63 %)	60 s
Carbon dioxide sensor	CARBOCAP® GM10
Relative humidity	
Measurement range	0–95 %RH
Accuracy:	
in temperature range +10 ... +30 °C (+50 ... +86 °F)	±3 %RH (0–70 %RH) ±5 %RH (70–100 %RH)
in temperature ranges 0 ... +10 °C, +30 ... +50 °C (+32 ... +50 °F, +86 ... +122 °F)	±7 %RH (0–100 %RH)
Stability in typical HVAC applications	±2 %RH over 2 years
Product lifetime	> 15 years
Humidity sensor	Vaisala INTERCAP®
Temperature	
Temperature sensor	Digital temperature sensor
Measurement range	0 ... +50 °C (+32 ... +122 °F)
Accuracy:	
at +10 ... +30 °C (+50 °F ... +86 °F)	±0.5 °C (±0.9 °F)
at −5 ... +10 °C, +30 ... +55 °C (+23 ... +50 °F, +86 ... +131 °F)	±1.0 °C (±1.8 °F)

1) *Accuracy applicable to 2000 ppm measurements at 1013 hPa pressure. Pressure or temperature dependencies not included in the values.*

Table 9 XMW85 operating environment

Property	Description/Value
Maximum wind/flow speed	30 m/s
Operating temperature	RH & T models: −20 ... +70 °C (-4 ... +158 °F) [1) 2)] CO_2, RH & T models: 0 ... +50 °C (+32 ... +122 °F)
Operating humidity	0–100 %RH, non-condensing

Property	Description/Value
Storage temperature	Without display: –40 ... +70 °C (–40 ... +158 °F) With display: –30 ... +70 °C (–22 ... +158 °F)
IP rating	IP30: Protected against solid foreign objects of 2.5 mm Ø and greater.

1) *Not for permanent installation in temperatures > +60 °C (+140 °F).*
2) *Display performance may vary near the extremes of the operating temperature range.*

Table 10 XMW85 inputs and outputs

Property	Description/Value
Supply voltage	18–35 V DC 24 V AC ±20 % 50/60 Hz
Digital output	Modbus RTU
Modbus RTU address range	1–247 (up to 255 possible, non-standard)
Bit rates	4800, 9600, 19200, 38400, 57600
Parity	None or Even
Stop bits	Supports automatically both 1 and 2 stop bits

Table 11 XMW85 mechanical specifications

Property	Description/Value
Housing material	ABS/PC UL-V0 approved
Housing color	White (RAL9003)
Max. wire size	1.5 mm^2 (16 AWG)
Weight:	
RH & T models	Without display: 104 g (3.67 oz) With display: 113 g (3.99 oz)
CO_2, RH & T models	Without display: 113 g (3.99 oz) With display: 122 g (4.30 oz)

Table 12 XMW85 compliance

Property	Description/Value
EU directives and regulations	EMC Directive (2014/30/EU) RoHS Directive (2011/65/EU) as amended by 2015/863
Safety	EN 61326-1, basic electromagnetic environment
EMC emissions	CISPR 32 / EN 55032, Class B
Compliance marks	CE, China RoHS, RCM

7.2 Spare parts and accessories

Information on spare parts, accessories, and calibration products is available online at vaisala.com and store.vaisala.com.

Table 13 Spare parts and accessories

Item	Item code
CO_2 module	GM10SP80
INTERCAP® humidity sensor	15778HM
10 pcs of INTERCAP sensors	INTERCAPSET-10PCS

7.3 XMW85 dimensions

All dimensions are in millimeters (mm).

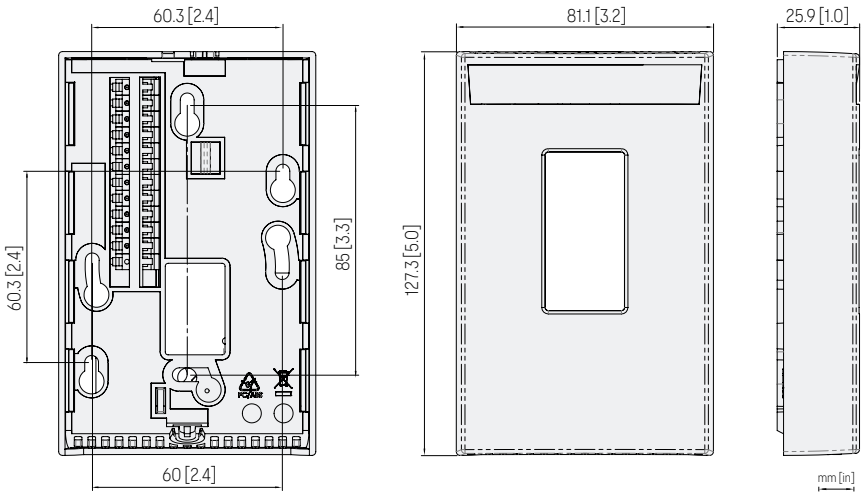

Figure 15 Dimensions of XMW85

8. Vaisala services

8.1 Service centers

Vaisala offers comprehensive customer care throughout the product life cycle. Our service centers offer maintenance, calibration, upgrade, and repair services. All the services are provided worldwide with fast deliveries. For more information, go to vaisala.com/services.

The services are available from:

- Vaisala Online Store, store.vaisala.com
- Vaisala Services, helpdesk@vaisala.com

8.2 Technical support

You can contact Vaisala technical support at vaisala.my.site.com/myvaisala or helpdesk@vaisala.com. You can find all our support channels at vaisala.com/support.

When contacting technical support, provide the following as applicable:

- Product name, model, and serial number
- Software/Firmware version
- Name and location of the installation site
- Name and contact information of a technical person who can provide further information
- Diagnostics package for the application

If applicable, also provide the following details:

- What failed (what worked / did not work)?
- Where did it fail (location and environment)?
- When did it fail (date, immediately / after a while / periodically / randomly)?
- How many failed (only one defect / other same or similar defects / several failures in one unit)?
- What was done when the failure was noticed?
- What was connected to the product and to which connectors?
- What is the input power source type, voltage, and what else (such as lighting, heaters, and motors) was connected to the same power output?
- Are all parts connected and grounded properly? Take a photo to help the troubleshooting.

8.3 Warranty

For warranty terms and conditions and the warranty claim process, see vaisala.com/warranty.

Note that warranty coverage may not apply if the product is damaged due to normal wear and tear, exceptional operating conditions, negligent handling or installation, or unauthorized modifications. See the applicable supply contract or Conditions of Sale for details of the warranty for each product.

Appendix A. Modbus reference

A.1 Function codes

Table 14 Modbus function codes

Function code (decimal)	Function code (hexadecimal)	Name
03	0x03	Read Holding Registers
04	0x04	Read Input Registers [1)]
43/14	0x2B / 0x0E	Read Device Identification

1) *The Read Input Registers function code is provided to ensure compatibility with Modbus clients that expect measurement data to be available on "Input registers" instead of "Holding registers". The register numbers and content are exactly the same on XMW85 despite of which function code is used to read them.*

A.2 Data encoding

In the data registers, the numeric values are available in one or two formats with separate register addresses: 32-bit IEEE floating point format and/or 16-bit signed integer format.

A.2.1 32-bit floating point format

Registers using **32-bit float** data format are encoded using the **binary32** encoding defined in IEEE 754. The format is also known as "single-precision floating point format".

The least significant 16 bits of a floating point number are placed at the Modbus register listed in the table, while the most significant 16 bits are placed in the register with number/ address + 1, as specified in Open Modbus TCP Specification, Release 1.0. This is also known as "little-endian" or "Modicon" word order.

Despite the specification, some Modbus masters may expect a "big-endian" word order (most significant word first). In such case, you must select "word-swapped" floating point format in your Modbus master for the Modbus registers of the device.

A complete 32-bit floating point value should be read in a single Modbus transaction.

Reading the measurement data registers with incorrect floating point format setting may occasionally result in correct-looking values. It is highly recommended to verify that you have configured the floating point format correctly on your Modbus host system by reading a floating point value from the test value register 7938 (0x1F01). The returned value is exactly -123.45 if your Modbus client is configured correctly.

A.2.2 16-bit integer format

Table 15 Interpretation of 16-bit signed integer values

Value	Description
0x0000–0x7FFE	Value in range 0–32766
0x8002–0xFFFF	Value in range -32766 ... -1 (2's complement)
0x8000	Value is not available

The 16-bit integer value for measured temperature and humidity is scaled by 10 to include the necessary decimal.

A.3 Modbus registers

NOTICE! Registers are numbered in decimal, starting from 1. Register addresses in actual Modbus messages (Modbus Protocol Data Unit (PDU)) are in hexadecimal and start from zero.

Accessing unavailable (temporarily missing) measurement data does not generate a Modbus exception. "Unavailable" value (a quiet NaN for floating point data or 0x8000 for integer data) is returned instead. An exception is generated only for any access outside the applicable register ranges.

A.3.1 Measurement data registers

Table 16 Modbus measurement data registers, metric (read-only)

Register number	Address	Register description	Data format	Unit
1	0x0000	Measured CO_2 value	32-bit float	ppm
3	0x0002	Measured humidity	32-bit float	%RH
5	0x0004	Measured temperature	32-bit float	°C

Register number	Address	Register description	Data format	Unit
257	0x0100	Measured CO_2 value	16-bit integer	ppm
258	0x0101	Measured humidity (RH * 10)	16-bit integer	%RH
259	0x0102	Measured temperature (T * 10)	16-bit integer	°C

Table 17 Modbus measurement data registers, non-metric (read-only)

Register number	Address	Register description	Data format	Unit
6401	0x1900	Measured CO_2 value	32-bit float	ppm
6403	0x1902	Measured humidity	32-bit float	%RH
6405	0x1904	Measured temperature	32-bit float	°F
6657	0x1A00	Measured CO_2 value	16-bit integer	ppm
6658	0x1A01	Measured humidity (RH * 10)	16-bit integer	%RH
6659	0x1A02	Measured temperature (T * 10)	16-bit integer	°F

A.3.2 Status registers

Table 18 Modbus status registers (read-only)

Register number	Address	Register description	Data format	Notes
513	0x0200	Device status	16-bit integer	**0x0000**: Status OK; if other values are returned, see Troubleshooting.
514	0x0201	Error code	32-bit integer	Used by Vaisala Technical Support when solving device problems

Register number	Address	Register description	Data format	Notes
518	0x0205	Humidity measurement status	16-bit integer	**0x0000**: Status OK **0x0001**: Measurement not supported **0x0004**: Under range **0x0008**: Over range **0x0080**: Sensor failure **0x0100**: Measurement not ready [1)]
519	0x0206	Temperature measurement status		
520	0x0207	CO_2 measurement status		

1) Applicable to CO_2 measurement only.

More information

- Solving typical problems (page 26)

A.3.3 Test value registers

Read the known test values from the test registers to verify the functionality of your Modbus implementation.

Table 19 Modbus test registers (read-only)

Register number	Register address	Register description	Data format	Test value
7937	0x1F00	Signed integer test	16-bit integer	-12345
7938	0x1F01	Floating point test	32-bit float	-123.45
7940	0x1F03	Text string test	text	Text string: "-123.45"

A.4 Modbus communication example

Reading CO_2 concentration value

The device address used in the following example is 240 (0xF0). The values returned by the device differ depending on the ambient conditions. Your device might not return exactly the same values.

Request		Response	
Bytes on the line	**Description**	**Bytes on the line**	**Description**
(silence for 3.5 bytes)	Start of Modbus RTU frame	(silence for 3.5 bytes)	Start of Modbus RTU frame
0xF0	Transmitter address	0xF0	Transmitter address
0x03	Function (Read Holding Registers)	0x03	Function (Read Holding Registers)
0x00	Register address	0x04	Number of data bytes
0x00		0xE6	Value of first register (least significant word)
0x00	Number of 16-bit registers to read (2)	0x3A	
0x02		0x44	Value of second register (most significant word)
0xD1	Modbus RTU checksum	0x17	
0x2A		0x7E	Modbus RTU checksum
(silence for 3.5 bytes)	End of Modbus RTU frame	0xB7	
		(silence for 3.5 bytes)	End of Modbus RTU frame

Communication description	
Register number	1 (1-based Modbus register number) = address 0x0000 (0-based address used in actual communication).
Data format	Two 16-bit Modbus registers interpreted as IEEE 754 binary32 floating point value, least significant word first.
Returned value	0x4417 E63A, which is binary32 representation of 607.6 (ppm CO_2).

A.5 Device identification objects

Table 20 Device identification objects

Object ID	Object ID (hexadecimal)	Object name	Example contents
0	0x00	VendorName	“Vaisala”
1	0x01	ProductCode	"XMW85"
2	0x02	MajorMinorVersion	Software version (for example, "1.6.1")
3	0x03	VendorUrl	“https://www.vaisala.com/”
4	0x04	ProductName	Product name, for example, "Vaisala XMW85 Carbon Dioxide, Humidity and Temperature Transmitter"
128	0x80	SerialNumber [1)]	Transmitter serial number, for example, "J1140501"
145	0x91	ProductCode (CO_2 sensor) [1)] [2)]	"GM10"
152	0x98	SerialNumber (CO_2 sensor) [1)] [2)]	CO_2 sensor serial number, for example, "X11A1310"

1) Vaisala-specific device information object.
2) Available only with devices with CO_2 measurement.

Online store

Accessories, spare parts, and calibration and repair products are available online at store.vaisala.com.

Recycling

Recycle all applicable material according to local regulations.

VAISALA

vaisala.com

AKRIBIS · www.akribis.info · contacto@akribis.info