USER GUIDE

WX-001-0200

Radwag

Distributed by AKRIBIS

User manual

IMMU-49-01-08-23-EN

Stent weighing kit

VGV 103-139

radwag.com
Scan the QR code to view additional scientific material that may be of interest to you. There you will find more useful information in an accessible format!

AKRIBIS www.akribis.info contacto@akribis.info

JULY 2023

Contents

1. GENERAL 4
2. DESIGN OF THE KIT 5
3. UNPACKING 5
4. INSTALLATION OF THE KIT 6
4.1. Operation 7

1. GENERAL

A stent is a kind of a prosthesis that is inserted into blood vessels to make them patent again. Thanks to the stent, dozens of human beings can be saved. Its shape, size and weight must be adapted to blood vessels. Importantly the place of stent application must be sterile. These properties require the use of higher-resolution balances to inspect such a prosthesis – stent.

The stent weighing kit has been designed to weigh such a sensitive sample as stent as precisely as possible and simultaneously in an easy and ergonomic way. The aforesaid precision is attributable to a new series of XA 5Y.M.A 5 and XA 5Y.M microbalances, while ergonomics to specially designed weighing pans and extra draft shields.

The structures of weighing pans that form the kit allow weighing stents of various size, for example 5,5 × 140 mm, 6 × 60 mm, 8 × 40 mm, 8 × 40 mm, 19 × 10 mm and 1,6 × 19 mm. Thanks to a well-thought-out design of the kit and dedicated applicators, the operator can put a stent on a special weighing pan for increased work ergonomics and elimination of cross-contamination.

In view of diverse shapes and sizes of stents, the kit is supplied with two kinds of weighing pans, dedicated shields and applicators suited in terms of size of stents. Since RADWAG microbalances are versatile, both right- and left-handed people may use them.

The entire design of the kit that involves the fork-shaped weighing pan and extra draft shield has eliminated difficulties related to weighing such lightweight high-volume samples as stents. As a result stent weighing results correspond to balance precision results.

AKRIBIS · www.akribis.info · contacto@akribis.info

2. DESIGN OF THE KIT

The stent weighing kit contains 7 items:

1. draft shield base,
2. fork-shaped weighing pan for large stent weighing,
3. fork-shaped weighing pan for small stent weighing,
4. large draft shield,
5. small draft shield,
6. large stent applicator.
7. small stent applicator.

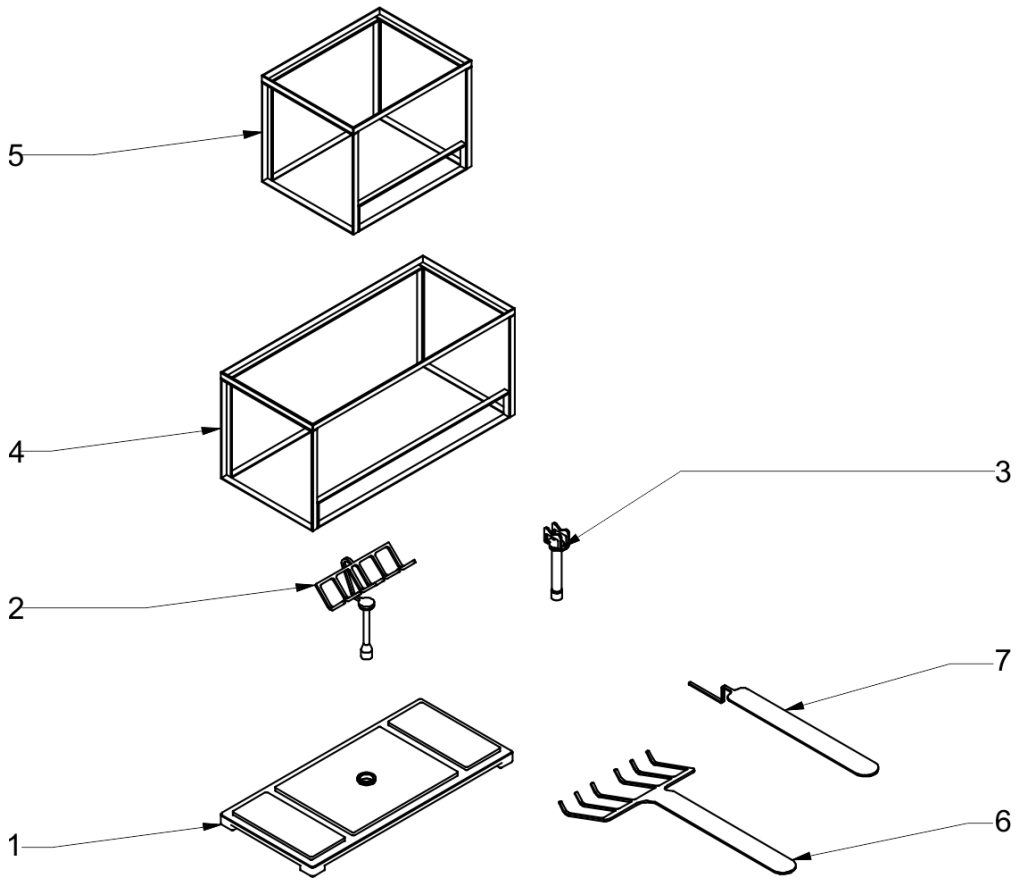

3. UNPACKING

Unpack a delivered packaging, remove foam protectors and then carefully take the kit out of the box.

4. INSTALLATION OF THE KIT

Note:
All actions must be taken carefully and gently in order not to damage the balance.

Before installing the kit, disassemble a standard weighing pan and shields. In so doing, follow the description in the balance manual.

Depending on needs, you need to fix all elements of the standard small or large stent weighing kit (the figure below shows the example of installation of a large stent weighing kit):

- draft shield base (1)
- fork-shaped weighing pan for large stent weighing (2)
- large draft shield (4)

After installing all elements and connecting the extra equipment, you can connect the balance to the power supply by means of the power adapter supplied.

Next tare the balance and start weighing filters.

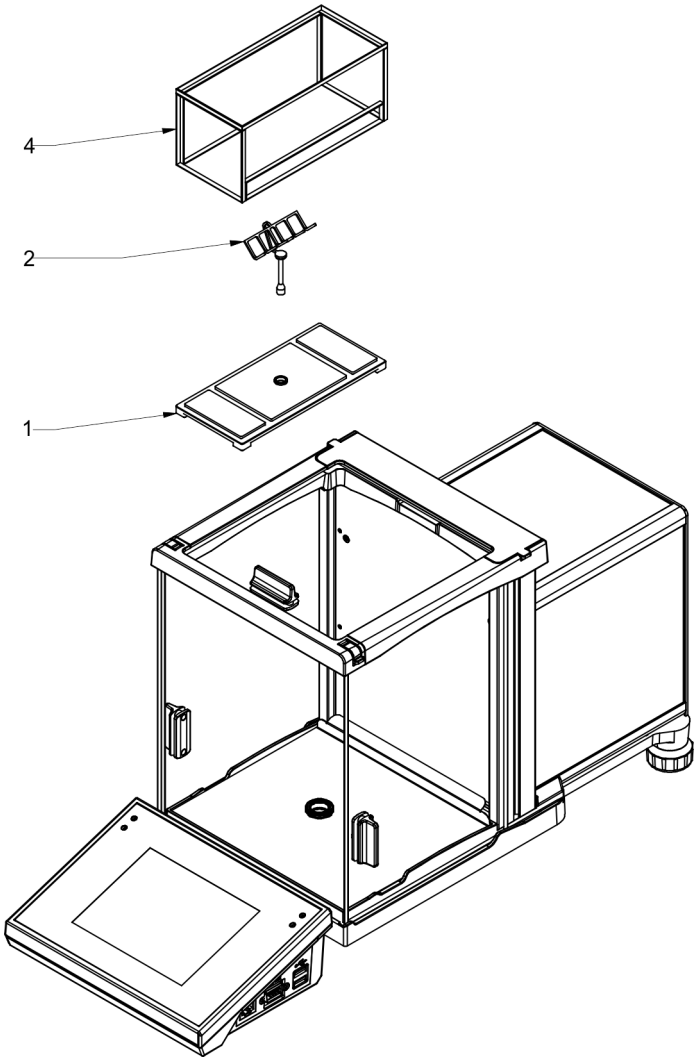

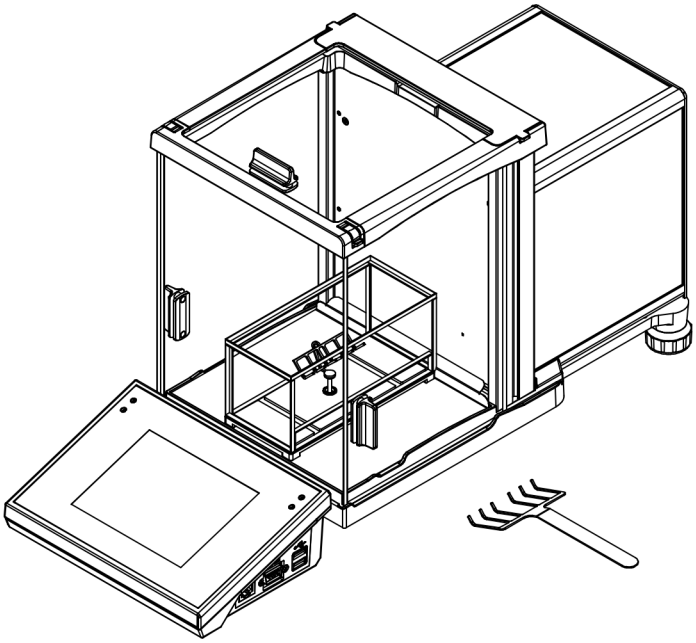

The view of the balance with the kit after installation.

4.1. Operation

When the device is already prepared, you can start weighing stents. While weighing, follow the guidelines presented in the balance manual.