USER GUIDE

WLC 2/A2/C/2 with 4IN/4OUT Module

Radwag

Distributed by AKRIBIS

User manual

ITKU-105-14-02-22-EN

WLC

WLC/A1/C/2 Precision Scale
WLC/A2/C/2 Precision Scale
WLC/A2 Precision Scale

radwag.com
Scan the QR code to view additional scientific material that may be of interest to you.
There you will find more useful information in an accessible format!

AKRIBIS www.akribis.info contacto@akribis.info

FEBRUARY 2022

PRECAUTIONS

Prior to installation, use or maintenance activities, carefully read this user manual and follow the provided guidelines.

	Prior to the first use, carefully read this user manual. Use the weighing device only as intended.
	Place weighed loads in the centre of the weighing pan.
	Load the weighing pan with loads of gross weight which does not exceed the maximum capacity.
	Mind not to leave heavy loads on the weighing pan for longer periods of time.
	Protect the indicator against considerable temperature variation, solar and UV radiation, substances causing chemical reactions.
	The C32 scale must not be operated in hazardous areas endangered with explosion of gases, and in dusty environments.
	In case of damage, immediately unplug the device from the mains.
	Scales to be decommissioned must be decommissioned in accordance with valid legal regulations.
	Do not let battery discharge in case of prolonged storage of the device in low temperature.
	A worn out battery can be replaced only by the manufacturer or by the authorized service.
	Accumulators do not belong to regular household waste. The European legislation requires discharged accumulators to be collected and disposed separately from other communal waste with the aim of being recycled. Symbols on batteries identify harmful compounds: Pb = lead, Cd = cadmium, Hg = mercury. Dear user, you are obliged to dispose of the worn out batteries as regulated.
	If the scale is to be operated in conditions that are difficult due to electrostatics (e.g. printing house, packing centre, etc.), you must connect it to the earth wire. To enable this, the device features functional earthing terminal, marked with ⏚ symbol.

CONTENTS

1. INTENDED USE 5
2. WARRANTY CONDITIONS 6
3. MAINTENANCE ACTIVITIES 6
3.1. Cleaning ABS Components 6
3.2. Cleaning Glass Components 7
3.3. Cleaning Stainless Steel Components 7
3.4. Cleaning Powder-Coated Components 7
3.5. Cleaning Aluminium Components 8
4. SERVICE AND REPAIR 8
5. RECYCLING 8
6. MECHANICAL DESIGN 9
6.1. Dimensions 9
6.2. Connectors Arrangement 10
6.3. RS232 Connectors 10
6.4. Inputs / Outputs 10
6.4.1. Technical Specifications 11
6.4.2. I/O Schematic Diagrams 11
6.5. Operation panel 12
7. INSTALLATION 13
7.1. Unpacking and Installation 13
7.2. Levelling 13
7.3. Connecting the Scale to the Mains 14
7.4. Warm-Up Time 14
7.5. Battery Charge Status 14
7.6. Battery Charge Status Check 15
8. OPERATING THE MENU 15
8.1. Return to the Weighing Mode 16
9. WEIGHING 16
10. DIAGRAMS OF CONNECTION CABLES 17
11. TECHNICAL SPECIFICATIONS 18
12. TROUBLESHOOTING 18
13. ERROR MESSAGES 19

1. INTENDED USE

WLC/A precision scales enable fast and accurate mass measurements under laboratory and industrial conditions. The devices are equipped with an internal battery which allows their operation in places where there is no access to the mains. The WLC series features a stainless steel weighing pan, and a backlit LCD guaranteeing clear weighing result presentation.

WLC/A precision scales are equipped with the following interfaces: 2 x RS232, USB type A, and USB type B, wireless communication (option). The interfaces enable cooperation between the scale and peripheral devices (e.g. printer, computer, USB flash drive).

⚠	***This equipment has been tested and found to comply with the limits for a Class A digital device, pursuant to part 15 of the FCC Rules. These limits are designed to provide reasonable protection against harmful interference when the equipment is operated in a commercial environment. This equipment generates, uses and can radiate radio frequency energy and, if not installed and used in accordance with the instruction manual, may cause harmful interference to radio communications. Operation of this equipment in a residential area is likely to cause harmful interference in which case the user will be required to correct the interference at his own expense.***
⚠	***This equipment has been tested and found to comply with the limits for a Class A according to standards, listed in declaration of conformity, required by European regulations in order to use CE marking. This equipment is not intended for use in residential environments and may not provide adequate protection to radio reception in such environments. Class A products may also be utilized in residential/domestic environments but may cause interference and require the user to take adequate corrective measures.***

2. WARRANTY CONDITIONS

A. RADWAG feels obliged to repair or exchange all elements that appear to be faulty by production or by construction.
B. Defining defects of unclear origin and means of their elimination can only be realized with assistance of manufacturer and user representatives.
C. RADWAG does not bear any responsibility for damage or losses resulting from unauthorized or inadequate performing of production or service processes.
D. The warranty does not cover:
   - mechanical damage caused by product exploitation other than intended, damage of thermal and chemical origin, damage caused by lightning, overvoltage in the power network or other random event,
   - inappropriate cleaning habits.
E. Loss of warranty takes place if:
   - a repair is carried out outside RADWAG authorized service point,
   - service claims intrusion into mechanical or electronic construction by unauthorized people,
   - the device does not bear company security stickers.
F. Warranty conditions outline the warranty period for rechargeable batteries attached to the device for 12 months.
G. For detailed warranty conditions read the warranty certificate.
H. Contact with the central authorized service: +48 (48) 386 63 30.

3. MAINTENANCE ACTIVITIES

In order to ensure safety in the course of cleaning, it is necessary to disconnect the device from the mains. With this condition met, uninstall the weighing pan and other detachable components.

⚠	***Cleaning the weighing pan while still installed may cause damage of the measuring system.***

3.1. Cleaning ABS Components

To clean dry surfaces and avoid smudging, use clean non-colouring cloths made of cellulose or cotton. You can use a solution of water and detergent (soap, dishwashing detergent, glass cleaner). Gently rub the cleaned surface and let it dry. Repeat cleaning process if needed.

In the case of hard to remove contamination, e.g. residues of adhesive, rubber, resin, polyurethane foam etc., you can use a special cleaning agents based on a mixture of aliphatic hydrocarbons that do not dissolve plastics. Before using the cleanser for all surfaces we recommend carrying out tests. Do not use cleansers containing abrasive substances.

AKRIBIS · www.akribis.info · contacto@akribis.info

3.2. Cleaning Glass Components

Select dissolvent depending on a dirt. Never soak the glass panes in alkaline solutions since they interact with glass and may cause damage. Do not use cleansers containing abrasive substances.

For organic dirt use acetone first, next use water or detergent. For other than organic dirt use diluted acid solutions (soluble salts of hydrochloric or nitric acid) or base solutions (ammonium or sodium base).

To remove ACIDS use protophilic solvent (sodium carbonate), to remove BASE use protogenic solvent (mineral acid of various concentration).

In case of heavy contamination use brush and detergent, nevertheless avoid detergents containing large and hard molecules which could potentially scratch glass panes.

At the end of the cleaning process rinse the pane using distilled water. Use soft brush with wooden or plastic handle exclusively in order to avoid risk of scratches. Do not use wire brush. Rinsing is a necessary cleaning process stage allowing to remove remaining soap, detergents and other cleansers from the panes prior their reinstallation. After preliminary cleaning process stage, rinse the pane using running water first, distilled next.

Avoid drying the panes either using paper towel or forced air circulation since some fibres, grains or contamination of other type could permeate into the panes thus causing weighing errors. We do not recommend using driers when drying measuring glass tools. It is a frequent treatment to leave glass components on a rack to dry.

3.3. Cleaning Stainless Steel Components

Avoid using cleansers containing any corrosive chemicals, e.g. bleach (including chlorine). Do not use cleansers containing abrasive substances. Always remove the dirt using microfiber cloth to avoid damage of protective coating.

In case of a daily maintenance:

1. Remove the dirt using cloth dipped in warm water.
2. For best results, add a little bit of dishwashing detergent.

3.4. Cleaning Powder-Coated Components

For preliminary cleaning process stage you need running water or wet sponge featuring large holes, this will help you to remove loose, heavy dirt. Do not use cleansers containing abrasive substances. Next, using cloth and cleanser-water solution (soap, dishwashing liquid) gently rub the cleaned surface.

Avoid using cleanser without water since it may result with damage of the cleaned surface, please mind that large amount of water mixed with cleanser is a must.

3.5. Cleaning Aluminium Components

While cleaning aluminium components use products acid by nature, e.g. spirit vinegar, lemon. Do not use cleansers containing abrasive substances. Avoid using hard brush, this may cause scratches.

It is recommended to use microfibre cloth. While polishing the surface use circular movements. Use clean, dry cloth to make the surface shine.

4. SERVICE AND REPAIR

⚠	***In case of any sign of damage, it is necessary to disconnect the device form the mains immediately. The damaged component must be replaced or repaired by RADWAG service directly.***

In case of any problems with correct operation of the scale, contact the closest manufacturer's service point. In case of defects, deliver the faulty product to the manufacturer's service point. If the product cannot be delivered to the manufacturer's service point, call the service and report the defect. Repair scope and method will be set up.

⚠	***The user is NOT ALLOWED to carry out any kind of repair of the device himself/herself. Any attempt of scale modification, repair etc., by unauthorized persons, will result with loss of validity of manufacturer-issued certificates, declarations and warranty.***

5. RECYCLING

HY10 scales must be recycled, they are not to be treated as a regular household waste. Scales to be decommissioned must be decommissioned in accordance with valid legal regulations.

6. MECHANICAL DESIGN

6.1. Dimensions

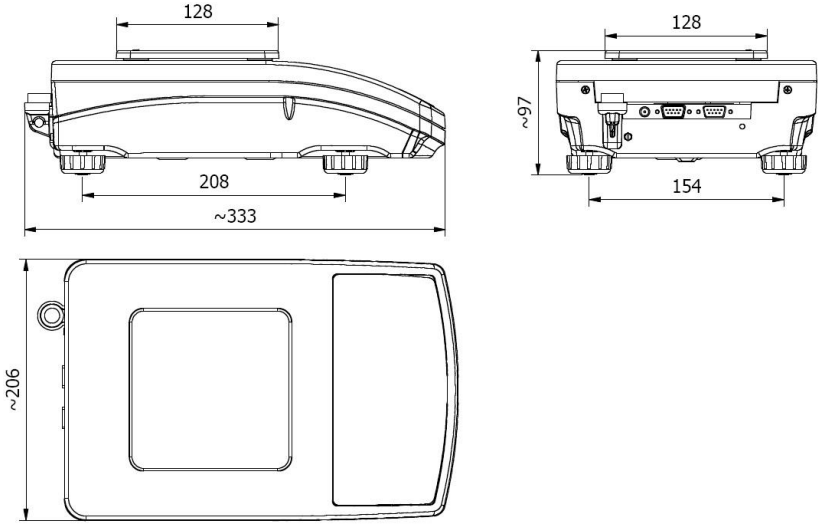

WLC/A1, WLC/A1/C/2 precision scale

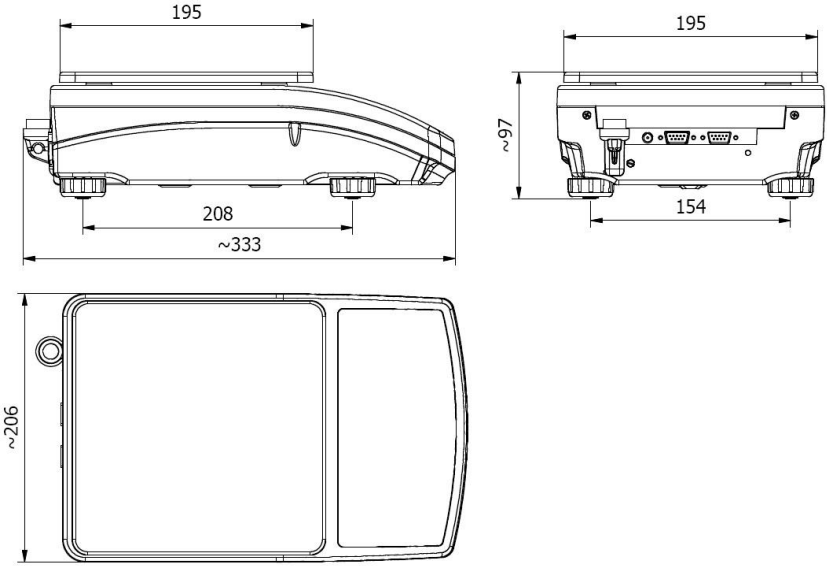

WLC/A2, WLC/A2/C/2 precision scale

6.2. Connectors Arrangement

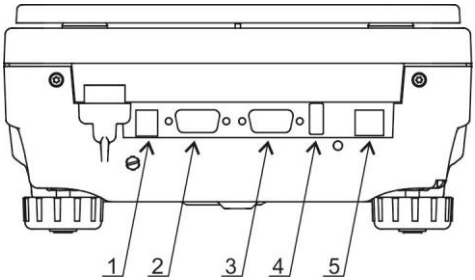

Connectors view

1- power supply socket 12 VDC
2- RS232 (1) connector
3- RS232 (2) connector
4- USB A "host"
5- USB B "device"

6.3. RS232 Connectors

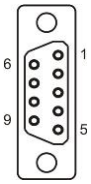	**RS232 (1) connector DB9/M (male)** Pin2 – RxD Pin3 – TxD Pin4 – 5 VDC Pin5 – GND
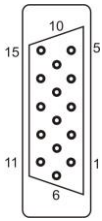	**RS232 (2) connector DSUB15/F (female)** Pin8 - TxD2 Pin9 - 5 VDC Pin10 - GNDRS Pin13 - RxD2

6.4. Inputs / Outputs

Standard C32 scale is equipped with 4 optoisolated inputs and 4 semiconductor outputs (solid-state relays). The signals are sent via DSUB15/F connector.

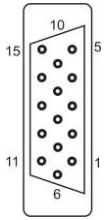	**IN/OUT connector DSUB15/F (female)** Pin1 – GNDWE Pin2 - OUT1 Pin3 - OUT2 Pin4 – COMM Pin6 - IN4 Pin7 - IN3 Pin11 - IN2 Pin12 - IN1 Pin14 - OUT4 Pin15 - OUT3

6.4.1. Technical Specifications

Output parameters	
Output quantity	4
Output type	Solid-state relay
Cable cross-section	0.14 - 0.5 mm^2
Maximum output current	0.5 A DC
Maximum output voltage	30 VDC

Input parameters	
Input quantity	4
Input type	Optoisolated
Cable cross-section	0.14 - 0.5 mm^2
Input voltage range	5÷24VDC

6.4.2. I/O Schematic Diagrams

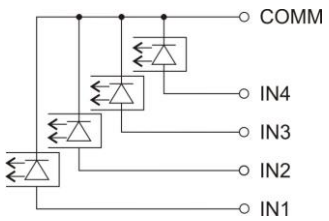	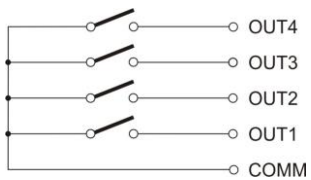
4 inputs	*4 outputs*

6.5. Operation panel

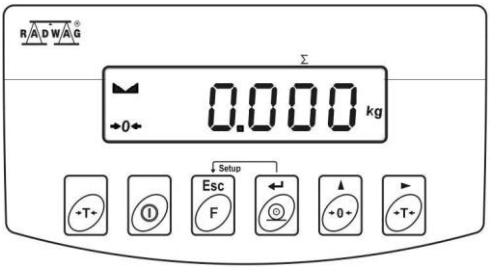

Operation panel of WLC A1, WLC/A2 precision scale

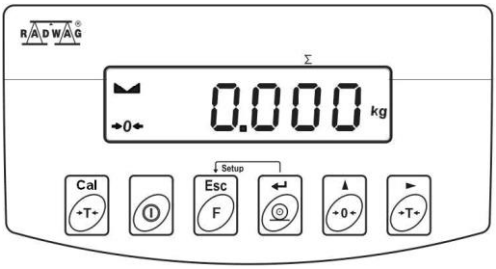

Operation panel of WLC/A1/C/2, WLC/A2/C/2 precision scales

Keys:

	Press to switch the weighing device on/off – hold the key for about 1 second.
F Esc	Function key, press to change the working mode.
	Press to send the weighing result to a printer or computer.
	Press to zero the scale.
	Press to tare the scale.
Cal	Press to perform internal adjustment manually (Applies exclusively to WLC/A1/C/2, WLC/A2/C/2 balances).

⚠	***Upon pressing [F Esc] + [◎ ↵] keys combination, functions of given keys change. Detailed information concerning use of [F Esc] + [◎ ↵] keys combination is to be found further down this manual.***

7. INSTALLATION

7.1. Unpacking and Installation

- Unpack the device and place it on a flat and even surface. Keep it far away from any sources of heat.
- Install the weighing pan, follow the below figures:

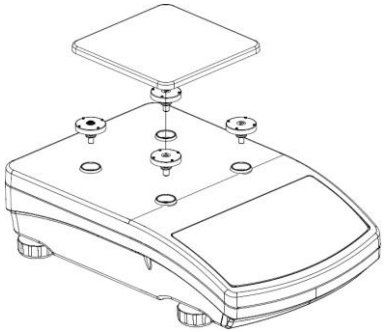	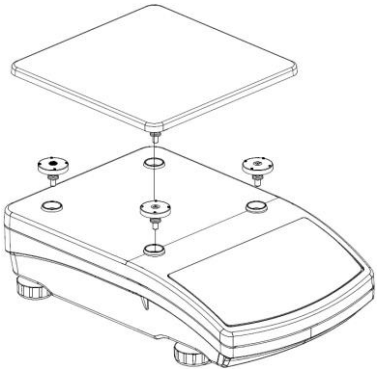
WLC/A1, WLC/A1/C/2 precision scale	*WLC/A2, WLC/A2/C/2 precision scale*

7.2. Levelling

To level the weighing instrument turn its feet. Keep turning the feet until the air bubble takes central position:

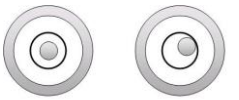

7.3. Connecting the Scale to the Mains

The weighing device can be connected to the mains only with a power supply that comes standard with the particular model. Nominal voltage of the power supply (specified on the power supply data plate) has to be compatible with the mains nominal voltage.

Procedure:

- Connect the power supply to the mains. Plug it to the power supply socket (back side of the scale housing).
- Press key. The key is also used to switch the scale on/off.
- Display test proceeds (all symbols are backlit for a moment), program name and number is displayed first, ZERO indication with reading unit next (displayed reading unit is conditioned by scale type).
- In case the weighing result is not zero after indication stabilisation, press key.

7.4. Warm-Up Time

- For correct scale operation, the workroom temperature must range between +15°C ÷ +30°C.
- It takes 30 minutes for the device to warm up.
- During the thermal stabilization, the indications on the screen can change.
- If you want to carry out adjustment operation, make sure that your device is thermally stable.
- Temperature and humidity variations during operation may cause indication errors. To remove the indication errors perform user adjustment.

7.5. Battery Charge Status

The scale of standard design is equipped with an internal battery. Battery state is signalled by pictogram, the pictogram is displayed in the top bar of the display.

pictogram display mode	**Meaning**
No pictogram	Battery charged. Regular scale operation.
Pictogram displayed continuously	Too low battery charge (the scale is about to shut down). Charge the battery immediately.
Blinking pictogram, blink frequency: ca. 1 s	Battery charge in progress. The device is connected to the power supply charging the battery.
Blinking pictogram, blink frequency: ca. 0.5 s	Battery error. Battery is damaged.

7.6. Battery Charge Status Check

- Press F Esc and →T← ► keys combination.
- Depending on the battery state, a respective status is displayed on the screen for 2s:

80%	Battery power supply. Battery power given in %.
CHArGE	Battery charge in progress. The device is connected to the power supply charging the battery.
-Err5-	Battery error. Battery is damaged.

- Next, the home screen is displayed automatically.

8. OPERATING THE MENU

In order to navigate the program menu use the operation panel.

F Esc + ◎ ↵	Press to enter the main menu.
→0← ▲ + →T← ►	Press to enter tare manually. Press to enter tare from tare database. Press to change value by 1 digit up. Press to scroll the menu up.
F Esc + →T← ►	Press to check battery/accumulator state.
F Esc + →0← ▲	Press to view date/time.
→0← ▲	Press to scroll the menu down. Press to change current parameter value.
→T← ►	Press to enter given submenu. Press to modify given parameter.
◎ ↵	Press to confirm modification.
F Esc	Press to exit, function remains unmodified. Press to move one menu level up.

8.1. Return to the Weighing Mode

Introduced menu modifications are automatically saved to scale memory upon return to the home screen. To return to the home screen press F Esc key repeatedly.

9. WEIGHING

Load the weighing pan. Read the result when stability marker is displayed. To assure long-term operation and correct mass measurements, follow the rules presented below:

Load the weighing pan steadily avoiding mechanical shocks.	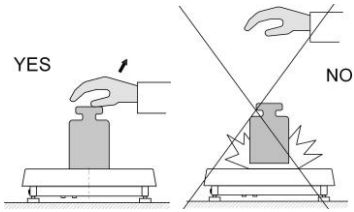
Place weighed loads centrally on the weighing pan (eccentricity errors are specified by EN 45501 standard, point 3.6.2.).	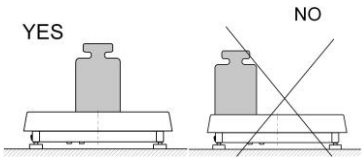
Do not apply concentrated force (total load in one point).	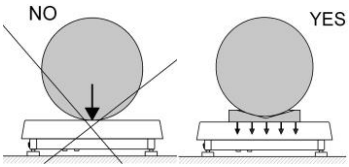
Avoid side loading, in particular side shocks.	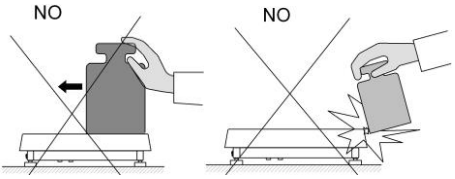

10. DIAGRAMS OF CONNECTION CABLES

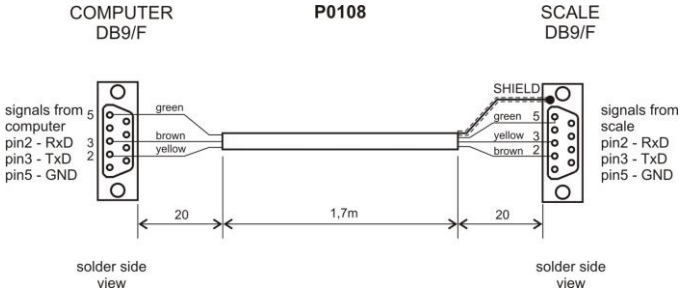

scale – computer cable

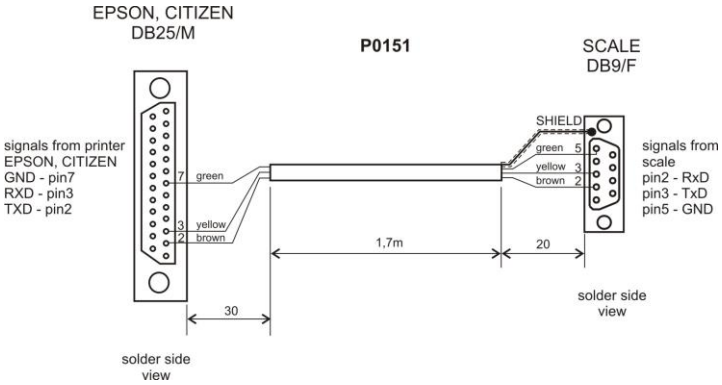

scale - printer cable (EPSON)

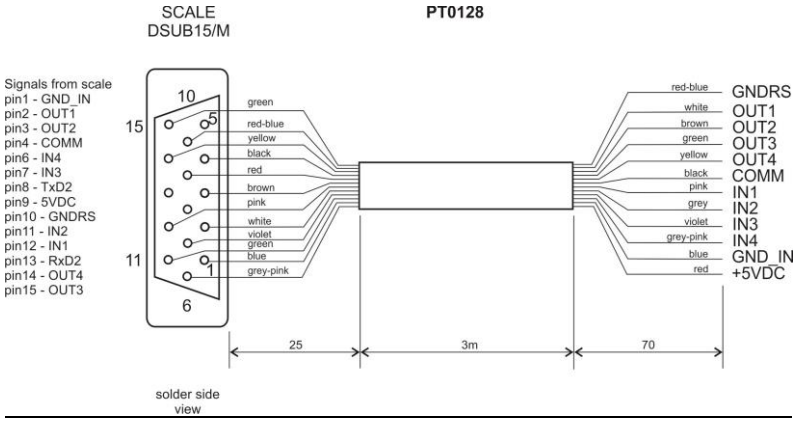

I/O cable

11. TECHNICAL SPECIFICATIONS

For technical specifications of respective scales go to RADWAG website www.radwag.com.

12. TROUBLESHOOTING

Problem	Cause	Solution
Scale start-up fail.	Power supply disconnected.	Connect the power supply to the scale.
	Battery discharged.	Connect the power supply to the mains, charge the battery.
	No battery (not installed or installed incorrectly).	Check if the battery is installed correctly (polarization).
The scale switches off automatically.	<7.4.t1> parameter set to value enforcing scale shut-down after particular time interval.	Go to <P7.Othr> menu, set <7.4.t1> parameter to 'nonE' value.
During the start-up, message 'LH' is displayed.	Weighing pan loaded during the start-up.	Unload the weighing pan. Zero indication is displayed.
Communication with the computer not established.	Incorrect computer port set in parameter <5.1.1.Prt>.	Enter <P5.ducE / 5.1.PC> submenu and set correct <5.1.1.Prt> parameter value.
	Incorrect transmission parameters for the selected computer port.	Enter <P4.Conn> menu and set correct transmission parameters for the selected computer port.
	Incorrect printout frequency for continuous transmission.	Enter <P5.ducE / 5.1.PC> submenu and set correct <5.1.3.Int> parameter value.
No printout on a scale-connected printer.	Incorrect printer port set in <5.2.1.Prt> parameter.	Enter <P5.ducE / 5.2.Prtr> submenu and set correct <5.2.1.Prt> parameter value.
	Incorrect transmission parameters for the selected printer port.	Enter <P4.Conn> menu and set correct transmission parameters for the selected printer port.
	No variable declared in weighing printout project.	Enter <P6.Prnt / 6.2.GLP> submenu and declare variables that are to be printed.
Communication with the additional display not established..	Incorrect additional display port set in <5.3.1.Prt> parameter.	Enter <P5.ducE / 5.3.AdSP> submenu and set correct <5.3.1.Prt> parameter value.
	Incorrect transmission parameters for the selected computer port.	Enter <P4.Conn> menu and set correct transmission parameters for the selected additional display port.
Displayed mass unit does not comply with the scale data plate.	Changed scale start unit in <9.1.UnSt> parameter.	Enter <P9.Unit / 9.1.UnSt> submenu and set unit complying with the scale data plate.
	Changed custom unit in <9.2.Unin> parameter.	Enter <P9.Unit / 9.2.Unin> submenu and set unit complying with the scale data plate.

13. ERROR MESSAGES

- E r r 2 -	Value beyond zero range.
- E r r 3 -	Value beyond tare range.
- E r r 4 -	Adjustment weight or start mass out of range (±1% for adjustment weight, ±10 for start mass).
- E r r 5 -	Battery error. Battery is damaged.
- E r r 8 -	Time of the following operations exceeded: taring, zeroing, start mass determining, adjustment process.
- n u l l -	Zero value from converter.
- F U L L -	Weighing range exceeded.
- L H -	Start mass error, indication out of range (±10% of start mass).
- H i -	Display range of total mass on scale display exceeded in 'Totalizing' mode.
- u L o -	Too low battery charge. The scale is about to shut down.
- E r r L o -	- Determined mass of single part in 'Parts counting' mode too small. - Value of 'Min' threshold is greater than value of 'Max' threshold in '+/- control' mode.
- E r r H i -	- Entered value of single part greater than maximum capacity in 'Parts counting' working mode. - Entered value of 'Max' threshold greater than maximum capacity in '+/- control' mode. - Entered reference mass greater than maximum capacity in 'Percent weighing' mode.