USER GUIDE

WLC 10.X7

Radwag

Distributed by AKRIBIS

User manual

IMMU-167-08-05-26-EN

X7 Series

AS X7 Analytical Balances
PS X7 Precision Balances
WLC X7 Precision Balances

radwag.com
Scan the QR code to view additional scientific material that may be of interest to you.
There you will find more useful information in an accessible format!

AKRIBIS · www.akribis.info · contacto@akribis.info

If you are reading this, it means that you are bound to achieve success. You have purchased a device that has been designed and manufactured to give you years of service. Congratulations and thank you for selecting RADWAG product.

MAY 2026

CONTENTS

1. GENERAL INFORMATION 7
1.1. Dimensions 7
1.2. Connectors 9
1.3. Connection cables – diagrams 10
1.4. Intended use 10
1.5. Precautions 10
1.6. Warranty conditions 11
1.7. Supervision over metrological parameters 11
1.8. User manual significance 11
1.9. Balance user training 11
2. TRANSPORT AND STORAGE 11
2.1. Delivery checklist 11
2.2. Package 12
3. UNPACKING AND INSTALLATION 12
3.1. Place of Use and Assembling 12
3.2. Standard delivery components list 12
3.3. Settings 14
3.4. Maintenance activities 15
3.5. Powering the Device 20
3.6. Temperature stabilisation time. 20
3.7. Connecting additional hardware 20
4. START-UP 21
5. KEYBOARD – BUTTONS FUNCTIONS 21
6. WEIGHING MODE HOME SCREEN 22
7. OPERATING BALANCE MENU 24
7.1. Entering balance menu 24
7.2. Screen scrolling 24
7.3. Soft keys list 25
7.4. Runnining software functions 25
7.5. Return to Weighing Mode 26
7.6. Buttons, Labels and Text Fields Configuration 27
7.6.1. Quick Access Keys 29
7.6.2. Labels 32
7.6.3. Text fields 34
7.6.4. Bar graphs 35
8. ADMINISTRATOR PANEL 37
8.1. Password settings 37
8.2. Operator accounts settings 38
8.3. Permissions management 39
9. WEIGHING OPERATION 40
9.1. Good weighing practice 40
9.2. Logging 41
9.3. Units 42
9.4. Weighing unit selection 42
9.5. Weighing units accessibility 42
9.6. Start unit selection 43

9.7. User-defined Unit 43
9.8. Balance zeroing 44
9.9. Balance taring 44
9.10. Weighing profile 45
9.11. <Weighing> - readout mode settings 46
9.12. Proximity sensors 48
9.13. Autotare 48
9.14. Print mode 49
9.15. Minimum sample weight 50
9.16. Cooperation with Titrators 52
9.17. Dual Range Balances and Weighing 52
9.18. Weighing loads suspended under the balance 53
10. MISCELLANEOUS PARAMETERS 54
11. ADJUSTMENT 60
11.1. Internal adjustment 60
11.2. External adjustment 60
11.3. User adjustment 61
11.4. Adjustment test 61
11.5. Automatic adjustment 61
11.6. Automatic adjustment time 61
11.7. Report printout 62
12. DETERMINING PRINTOUT CONTENT 62
12.1. Adjustment report 62
12.2. Header, footer, glp printouts 63
12.3. Non-standard Printouts 66
12.3.1. Inserting texts 66
12.4. Variables 70
13. WORKING MODES – GENERAL INFORMATION 70
13.1. Working modes accessibility 71
13.2. Running working mode 71
13.3. Parameters Related to a Working Mode 72
14. PARTS COUNTING 73
14.1. Supplementary Settings for Parts Counting Mode 73
14.2. Parts counting – quick access keys 74
14.3. Setting Reference Mass by Entering Determined Part Mass 74
14.4. Setting Reference Mass by Determining Part Mass 75
14.5. Acquiring Part Mass From a Database 76
14.6. Single Part Mass Update in the Database 76
14.7. Parts counting procedure 76
15. CHECKWEIGHING 77
15.1. Supplementary Settings for Checkweighing Mode 77
15.2. Checkweighing – quick access keys 78
15.3. Making Use of Checkweighoing Thresholds 78
16. DOSING 79
16.1. Supplementary Settings for Dosing Mode 80
16.2. Dosing – quick access keys 80
16.3. Making Use of Products Database for Dosing Operation 80

17. PERCENT WEIGHING 81
17.1. Supplementary Settings for Percent Weighing Mode 81
17.2. Percent weighing – quick access keys 81
17.3. Comparison of Sample to Reference Mass 82
18. DENSITY OF SOLIDS 84
18.1. Supplementary Settings for Solids Density Mode 86
18.2. Solids density – quick access keys 86
18.3. Solids density determination 86
19. DENSITY OF LIQUIDS 88
19.1. Supplementary Settings for Liquids Density Mode 88
19.2. Liquids density – quick access keys 88
19.3. Liquids density determination 89
20. ANIMAL WEIGHING 90
20.1. Supplementary Settings for Animal Weighing Mode 90
20.2. Animal weighing – quick access keys 91
20.3. Animal weighing - statistics 92
21. STATISTICS 93
21.1. Supplementary Settings for Statistics Mode 93
21.2. Statistics – quick access keys 93
21.3. Parameters for Series of Measurement 93
22. PEAK HOLD 95
22.1. Supplementary Settings for Peak Hold Mode 95
22.2. Peak hold – quick access keys 95
22.3. Means of Operation 95
23. FORMULATIONS 96
23.1. Supplementary Settings for Formulations Mode 97
23.2. Formulations – quick access keys 97
23.3. Adding Formulation to Formulations Database 97
23.4. Using Formulations for Weighing 99
23.5. Performed formulations report 104
24. ADDING 105
24.1. Supplementary Settings for Adding Mode 105
24.2. Adding – quick access keys 105
24.3. Means of Operation 105
25. STATISTICAL QUALITY CONTROL - SQC 107
25.1. Working mode activation 107
25.2. Additional settings related to sqc 109
25.3. Control 109
25.4. Product control report 111
26. PACKAGED GOODS CONTROL 113
26.1. Pgc mode start-up 113
26.2. Control settings 113
26.3. Pgc mode local settings 114
26.4. Editing Product for Control Process 115
26.5. Control start procedure 116
26.6. Control abort procedure 118

26.7. Aborted control restoring, power loss case....118
26.8. Non-destructive average tare control....118
26.9. Non-destructive empty-full control....122
26.10. Destructive Empty-Full and Full-Empty Control....123
26.11. Control Accordant with Internal Criteria....124
26.12. Reports....125
27. DATABASES....126
27.1. Database connected operations....126
27.2. Products....128
27.3. Operators....128
27.4. Packaging....129
27.5. Customers....129
27.6. Formulations....129
27.7. Formulations reports....130
27.8. Ambient conditions....130
27.9. Weighing records....130
27.10. Alibi....131
27.11. Control reports....131
27.12. Average tares....132
28. COMMUNICATION....133
28.1. Rs 232 ports setting....133
28.2. Ethernet port settings....133
28.3. Wi-fi port settings....133
28.4. Usb ports....136
29. PERIPHERAL DEVICES....139
29.1. Computer....139
29.2. Printer....140
29.3. Record of Measurement Data Onto a USB Flash Drive....143
29.4. Additional display....144
29.5. Barcode reader....145
29.6. External buttons....145
29.7. Ambient conditions module....146
30. AMBIENT CONDITIONS....147
31. COMMUNICATION PROTOCOL....148
31.1. List of Commands....149
31.2. Response format....150
31.3. Manual printout / automatic printout....162
32. PERIPHERAL DEVICES....163
33. ERROR MESSAGES....163
34. ADDITIONAL EQUIPMENT....164
35. BALANCE DATA....164

1. GENERAL INFORMATION

1.1. Dimensions

AS X7 series

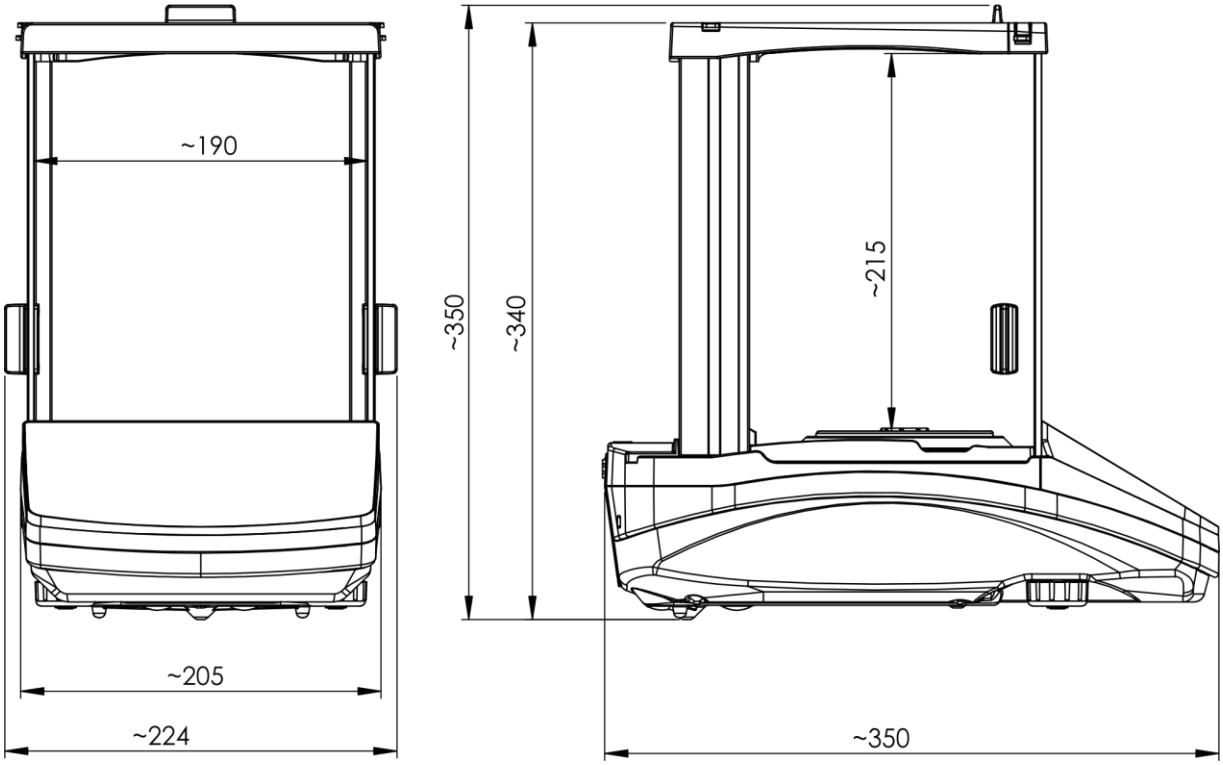

PS X7 series; d=0.001g

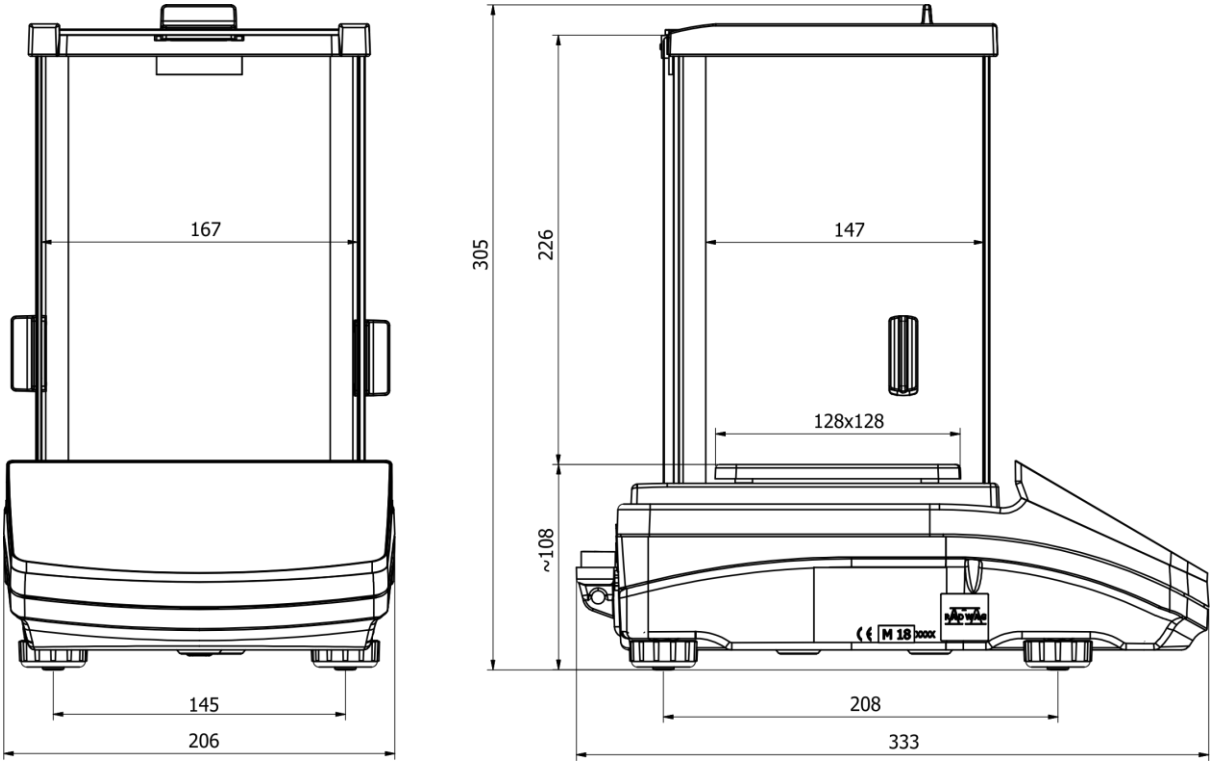

PS X7 series; d=0.01g

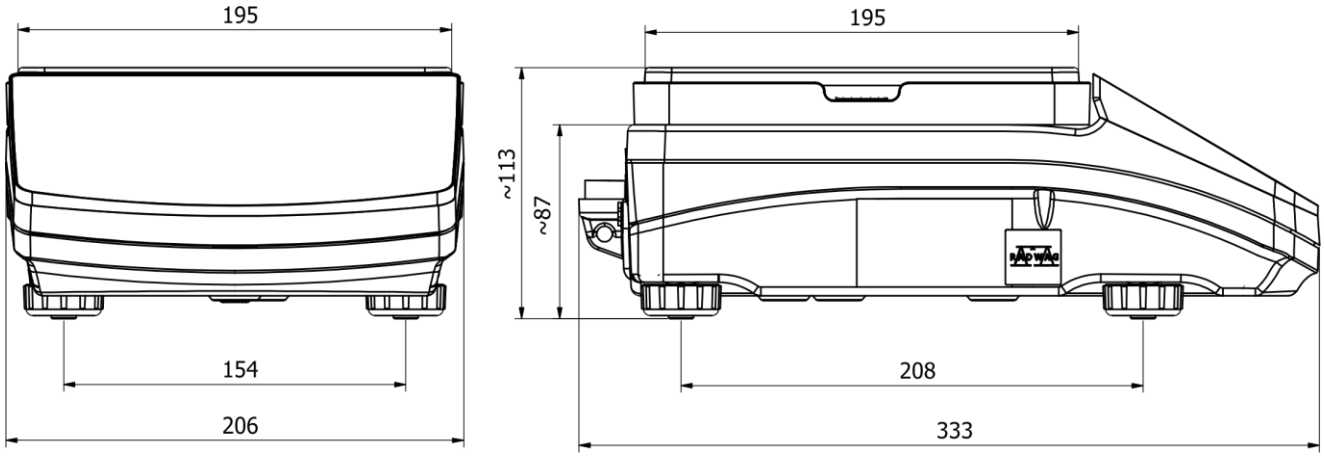

WLC X7 series

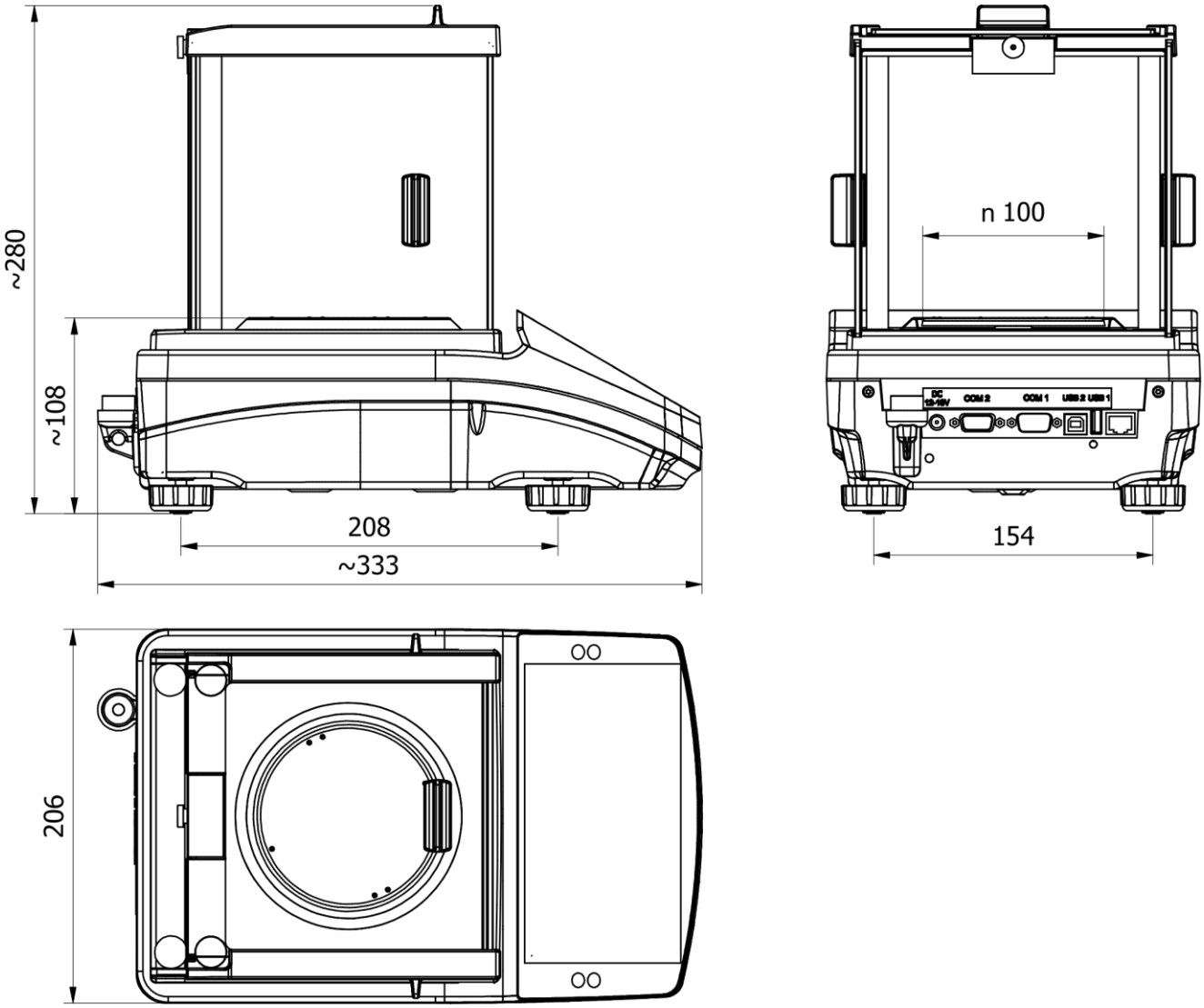

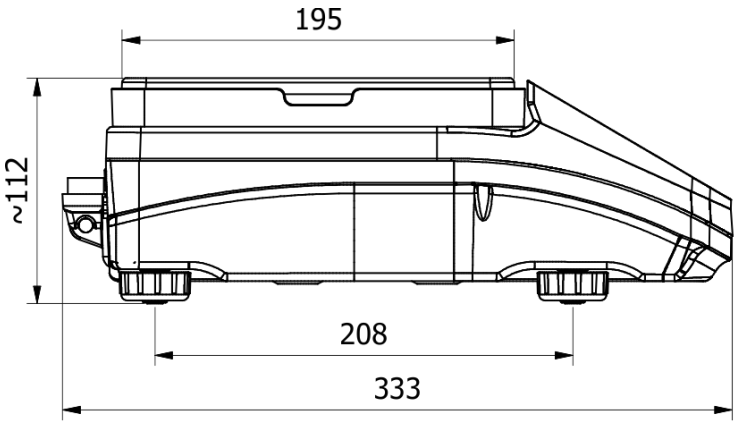

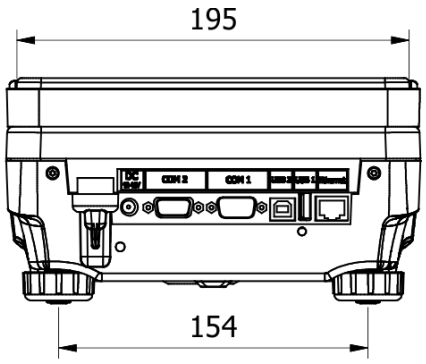

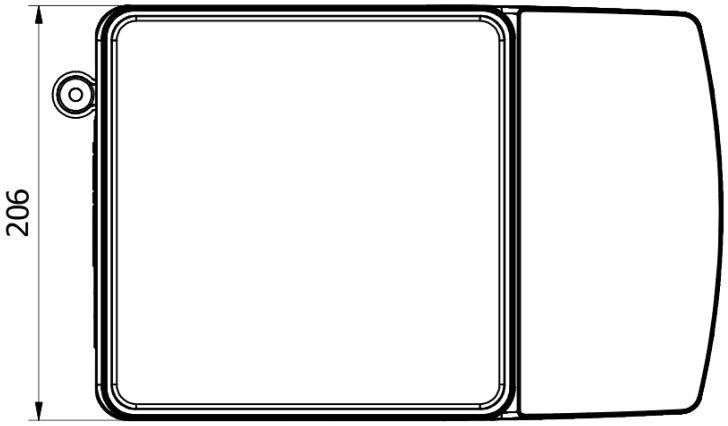

1.2. Connectors

X7 balances	
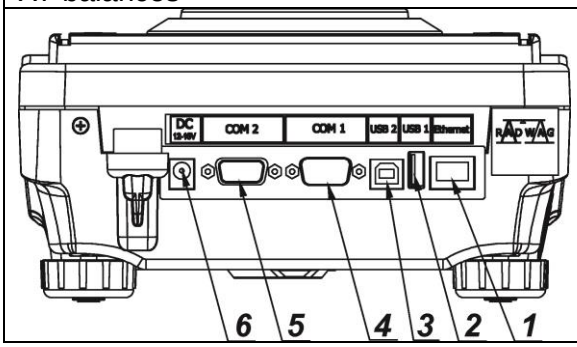	1. Ethernet RJ45 connector 2. USB 1, Type A connector 3. USB 2, Type B connector 4. COM 1 connector 5. COM 2 connector 6. Power supply socket

AS X7 balances	
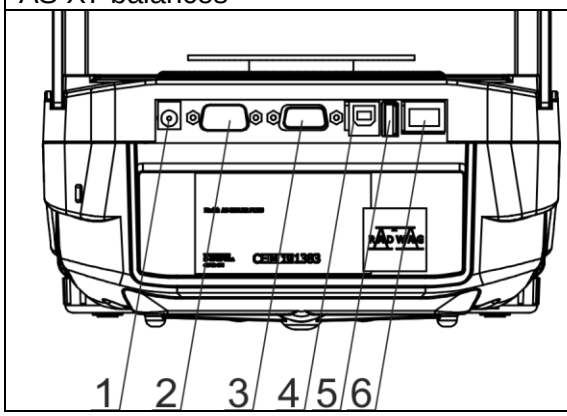	1. power supply seat 2. DB9/M connector (external buttons) 3. COM 1 connector (e.g. printer) 4. USB 2 type B connector (e.g. computer) 5. USB 1 type A connector (e.g. computer keyboard) 6. RJ45 Ethernet connector

1.3. Connection cables – diagrams

CAUTION!
„Ethernet-scale" cable is a standard network cable terminated with RJ45 on both ends.

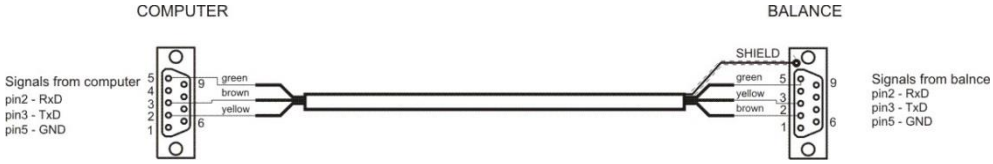

Scale – computer cable (RS232)

1.4. Intended use

X7 series balances are designed to provide accurate measurement of weighed loads, performed under laboratory conditions.

1.5. Precautions

- Prior to first use, it is highly recommended to carefully read this User Manual, and operate the balance as intended.
- Do not operate the touch panel using sharp-edged tools (knife, screwdriver, etc.).
- While loading the balance make sure that loads are placed in the very centre of the weighing pan.
- Load the weighing pan with loads, gross weight of which does not exceed instrument's measuring range (maximum capacity).
- Do not leave heavy loads on the weighing pan for a longer period of time.
- In case of failure, immediately unplug the instrument from the mains.
- Balances to be decommissioned, should be decommissioned in accordance with valid legal regulations.
- Do not use the balance is areas endangered with explosion. The X7 series is not designed to operate in EX zones.

NOTE:
This equipment has been tested and found to comply with the limits for a Class B digital device, pursuant to part 15 of the FCC Rules. These limits are designed to provide reasonable protection against harmful interference in a residential installation. This equipment generates uses and can radiate radio frequency energy and, if not installed and used in accordance with the instructions, may cause harmful interference to radio communications. However, there is no guarantee that interference will not occur in a particular installation. If this equipment does cause harmful interference to radio or television reception, which can be determined by turning the equipment off and on, the user is encouraged to try to correct the interference by one or more of the following measures:
- Reorient or relocate the receiving antenna.
- Increase the separation between the equipment and receiver.
-Connect the equipment into an outlet on a circuit different from that to which the receiver is connected.
-Consult the dealer or an experienced radio/TV technician for help.

NOTE:
This device complies with part 15 of the FCC rules. Operation is subject to the following two conditions:
(1) this device may not cause harmful interference, and
(2) this device must accept any interference received, including interference that may cause undesired operation.

NOTE:
The grantee is not responsible for any changes or modifications not expressly approved by the party responsible for compliance. Such modifications could void the user's authority to operate the equipment.

1.6. Warranty conditions

A. RADWAG feels obliged to repair or exchange all elements that appear to be faulty by production or by construction,
B. Defining defects of unclear origin defects and means of their elimination can only be realized with assistance of manufacturer and user representatives,
C. RADWAG does not bear any responsibility for defects or losses resulting from unauthorized or inadequate performing of production or service processes,
D. Warranty does not cover:
   - mechanical defects caused by product exploitation other than intended, defects of thermal and chemical origin, defects caused by lightning, overvoltage in the power network or other random event,
   - balance defects if it is utilized contrary to its intended use,
   - balance defects, if service claims removing or destroying protective stickers which secure the balance's housing against unauthorized access,
   - mechanical defects or defects caused by liquids and natural wear,
   - balance defects caused by inappropriate setting or by electrical wiring failures,
   - defects caused by overloading the mechanical measuring system,
   - maintenance activities (cleaning).
E. Loss of warranty takes place if:
   - a repair is carried out outside RADWAG sales office or authorized service point,
   - service claims intrusion into mechanical or electronic construction by unauthorized people,
   - other version of the operating system is installed in a balance,
   - the balance does not bear company protective stickers.
F. Detailed warranty conditions are listed on a service card.

1.7. Supervision over metrological parameters

Metrological parameters of a balance need to be checked by a user in determined time intervals. Inspection frequency is conditioned by ambient conditions in which a balance is used, kind of carried out processes and adopted quality management system.

1.8. User manual significance

It is very important to read the user manual carefully before switching on and starting up balance operation, even if you are experienced and have worked with this type of balance before.

1.9. Balance user training

The balance should be utilized and supervised only by users who are trained and experienced in such type of weighing instruments.

2. TRANSPORT AND STORAGE

2.1. Delivery checklist

Upon delivery it is necessary to check the package, make sure that your package bears no signs of damage.

2.2. Package

Keep all package elements should your device be transported in the future. Remember that only original packaging can be used for shipping purposes. Prior packing uncouple any cables, remove any separable components (weighing pan, shields, inserts). Pack the device components into an original packaging. The original packaging protects the equipment against potential damage during transportation.

3. UNPACKING AND INSTALLATION

Cut the adhesive tape. Take the device out of the packaging. Open the accessory box, take the device components out of it.

3.1. Place of Use and Assembling

- The balance should be stored and used in locations free of vibrations and shakes, free of air movement and dust.
- Ambient air temperature should not exceed the range of: +10 °C ÷ +40 °C.
- Ambient relative humidity should not exceed 80%.
- During balance operation, ambient temperature in the weighing room should not change rapidly.
- The balance should be located on a stable wall console desk or a stable working table which is not affected by vibrations and distant from heat sources.
- Take special precaution when weighing magnetic objects, as part of the balance is a strong magnet.

3.2. Standard delivery components list

- balance
- bottom insert (*AS balance exclusively*)
- centring ring (*AS balance exclusively*)
- weighing pan, open-work pan for AS with d=0,01/0,1mg *and d=1mg* exclusively
- draft shield (AS and PS balances, d=0.001g, exclusively).
- power supplier

AS X7	

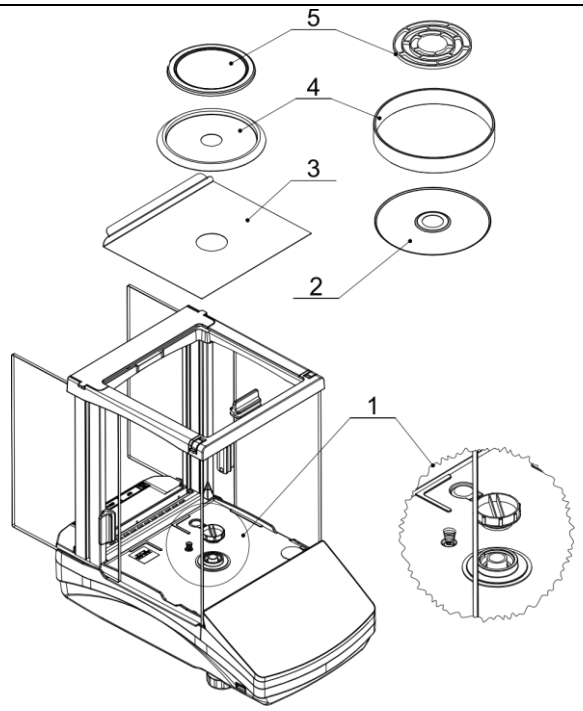	• remove a transport lock (1) – gently press the transport lock and turn it accordingly to <OPEN> instruction, keep the transport lock should your balance be transported in the future.
	• Install components following the above diagram:
	  • bottom insert (3),
	  • centring ring [embossment side up] (2),
	  • draft shield (4).
	  • weighing pan (5),
	
	CAUTION! AS balance with d=0,01/01mg *and d=1mg* is equipped with 2 weighing pans (standard and open-work). Remember to calibrate the balance upon changing the pan.

PS X7; d=0.001g	PS X7; d=0.01g
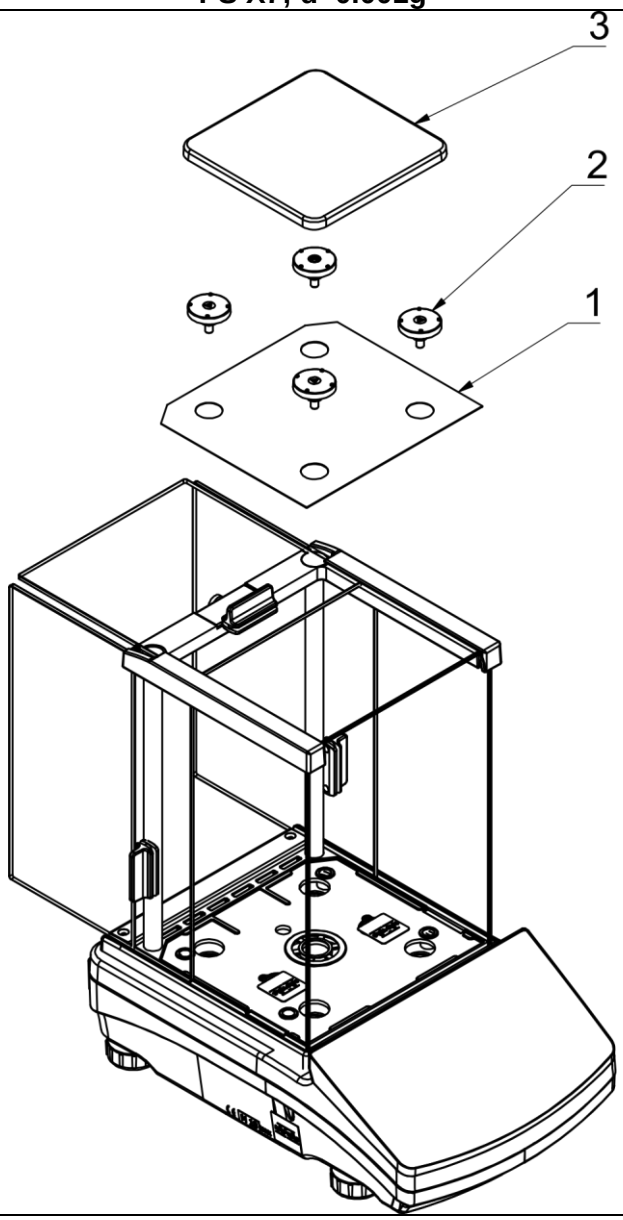	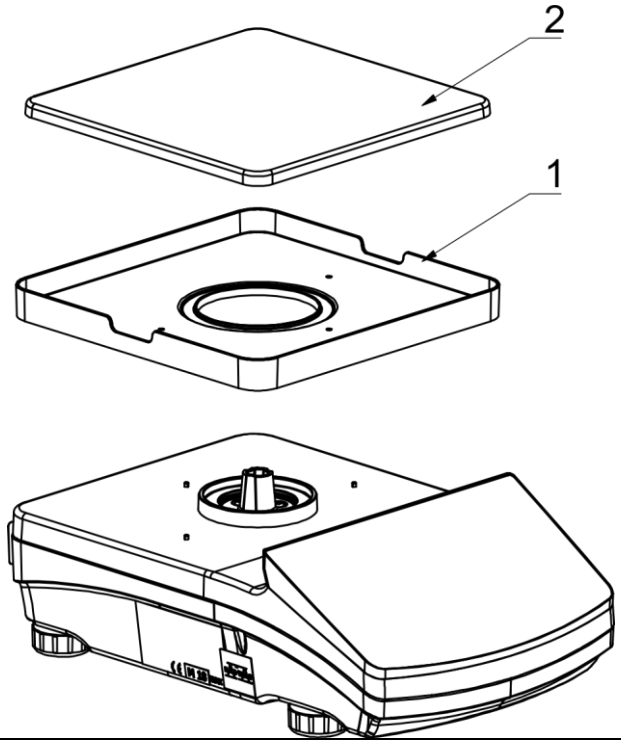
Install elements as showed in the diagram above: weighing chamber cover (1); weighing pan mandrels (2) and weighing pan (3).	Install elements as showed in the diagram above: weighing pan cover (1); weighing pan (2). Put the weighing pan on a projecting mandrel. From its bottom, the weighing pan has a tongue that should enter the hole in the body of the mandrel. It will assure a stable and firm position of the weighing pan in relation to the cover.

WLC X7, pan fi 100 mm	WLC X7, pan 195x195 mm
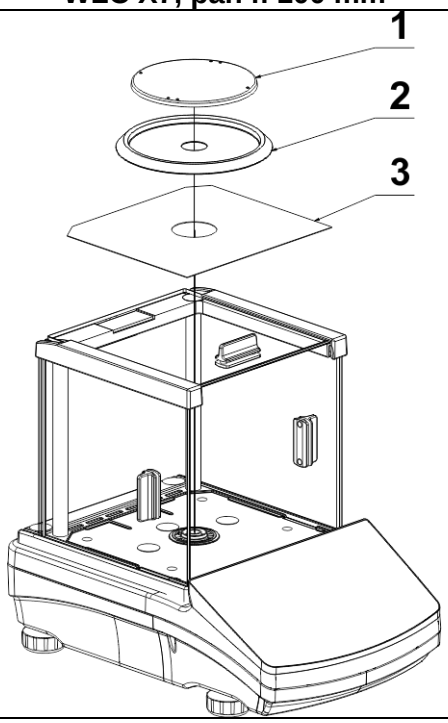	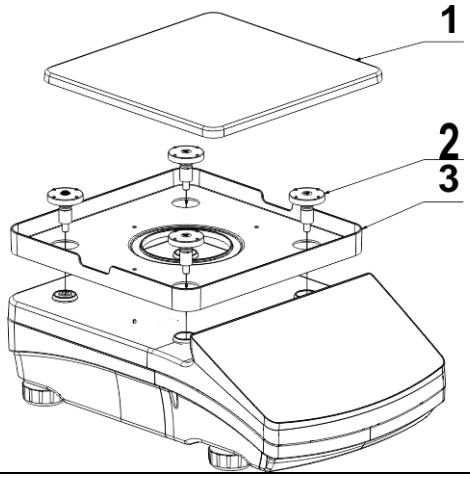
Install elements as showed in the diagram above: • weighing chamber cover (3), • weighing pan cover (2), • weighing pan (1).	Install elements as showed in the diagram above: • weighing pan cover (3); • weighing pan mandrels (2) • weighing pan (1).

3.3. Settings

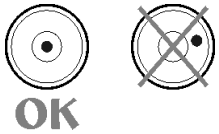

It is necessary to level the balance prior connecting it to the mains. To level the balance turn its feet until an air bubble takes central position.

The balance shall firmly rest on a surface, each of the feet must be supported.

AS X7 series balances are equipped with **Level Sensing System** System which allows monitoring of the balance level. Level monitoring is performed uninterruptedly in the course of balance operation. Level status is signalled with a respective pictogram, displayed in the lower right corner of the operation panel screen, on the quick access keys toolbar.

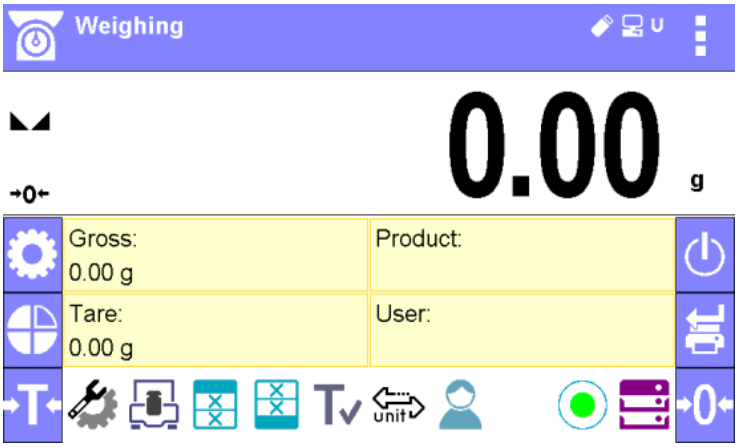

The system monitors balance level state. In case of level deviation, position of level marker is displayed on the screen (correct levelling, incorrect levelling) and/or respective alarm is activated. Balance level setting proceeds.

Levelling procedure:

- Press < > level status button located on the top of the display.
- Control panel of level function is displayed. Next to the level indicator, pictograms of balance's feet are displayed with the suggested direction of their rotation.

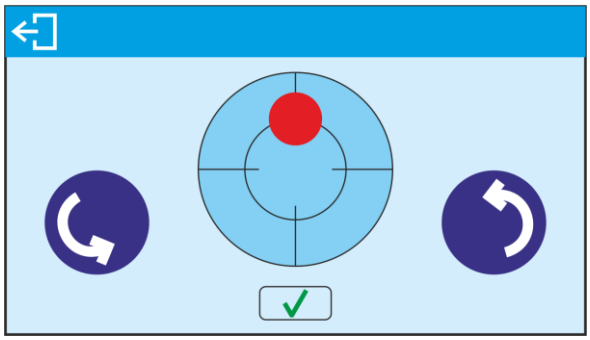

- Level the balance by turning its feet left/right, follow the pictograms, level marker moves towards the centre of the circle.
- When the marker takes central position, its colour turns from red to green – the balance is correctly levelled.

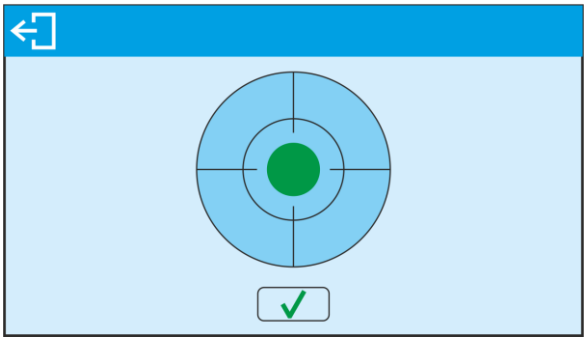

Go to the home screen.

3.4. Maintenance activities

1. Disassembly a weighing pan and other detachable components (the components differ depending on a balance type – see *Unpacking and Installation* section). Be careful while detaching the components so as not to cause any damages to the balance mechanism.
2. Using handheld vacuum cleaner remove dust from the weighing chamber.
3. Using a dry flannel cloth clean glass parts (mild cleanser may be applied if it does not contain any abrasive substances) – for draft shield disassembly instruction go to the next section of this manual.
4. Using a dry flannel cloth clean disassembled components (mild cleanser may be applied if it does not contain any abrasive substances).

CAUTION!
Cleaning draft shield while still installed may cause damage of the measuring system.

In order to ease cleaning of glass draft shield panes, it is permissible to remove them following the below instruction.

Cleaning ABS components:

To clean dry surfaces and avoid smutching use clean non-colouring cloths made of cellulose or cotton. You can use a solution of water and detergent (soap, dishwashing detergent, glass cleaner). Gently rub the cleaned surface and let it dry. Repeat cleaning process if needed.

In the case when contamination is hard to remove, e.g. adhesive, rubber, resin, polyurethane foam residues etc., you can use a special cleaning agents based on a mixture of aliphatic hydrocarbons that do not dissolve plastics. Before using the cleanser for all surfaces we recommend carrying out tests. Do not use products containing abrasive substances.

Cleaning draft shield panes:

Select dissolvent depending on a dirt. Never soak the glass panes in alkaline solutions since they interact with glass and may cause damage. Do not use abrasive substances.

For organic dirt use acetone first, next use water or detergent. For other than organic dirt use diluted acid solutions (soluble salts of hydrochloric or nitric acid) or base solutions (ammonium or sodium base).

To remove ACIDS use protofilic solvent (sodium carbonate), to remove BASE use protogenic solvent (mineral acid of various concentration).

In case of heavy contamination use brush or detergent nevertheless avoid detergents containing large and hard molecules which could potentially scratch glass panes.

Use soft brush with wooden or plastic handle exclusively to avaoid risk of scratches. Do not use wire brush.

At the end of the cleaning process rinse the pane using running water first, distilled next.

Rinsing is a necessary cleaning process stage allowing to remove remaining soap, detergents and other cleansers from the panes prior their reinstallation.

Avoid drying the panes either using paper towel or forced air circulation since some fibres, grains or contamination of other type could permeate into the panes thus causing weighing errors.

One shall not use driers when drying measuring glass tools.

It is a frequent treatment to leave glass components on a rack to dry.

Cleaning stainless steel components

When cleaning stainless steel components, the following table should be followed, which lists the types of contamination and ways of removing it.

Fingerprints	*Clean with alcohol or dilutant.* *Rinse with clean water and wipe dry.*
Oils, fats, greases	*Wash with organic solvents and then clean with warm water with soap or mild detergent.* *Rinse with clean water and wipe dry.*
Temperature stains and discolorations	*Wash with a gentle abrasive cleaner, clean lightly according to the direction of the surface structure.* *Rinse with clean water and wipe dry.*
Strong discoloration	*Clean lightly according to the direction of the surface structure.* *Rinse with clean water and wipe dry.*
Traces of rust	*Moisten with oxalic acid solution and leave for about 15-20 minutes, then wash with warm water with soap or mild detergent. Rinse with clean water and wipe dry.*
Paints	*Wash with paint solvent and then rinse with warm water with soap or mild detergent.* *Rinse with clean water and wipe dry.*

Scratches on the surface	*Gently polish the surface with a non-woven fabric (iron-free) according to the direction of the surface structure. Wash with a gentle abrasive cleaner. Rinse with clean water and wipe dry.*

Cleaning powder-coated components:

For preliminary cleaning stage you need running water or wet sponge featuring large holes, this will help you to remove loose, heavy dirt.

Do not use cleansers containing abrasive substances.

Next using cloth and cleanser-water solution (soap, dishwashing liquid) gently rub the cleaned surface.

Avoid using cleanser without water since it may result with damage of the cleaned surface, please mind that large amount of water mixed with cleanser is a must.

Cleaning aluminium components:
While cleaning aluminium components use products acid by nature, e.g. spirit vinegar, lemon. Do not use abrasive substances. Avoid using hard brush, this may cause scratches. It is recommended to use illigram cloth.

While polishing the surface use circular movements. Use clean, dry cloth
AS X7 series balances; disassembly steps:

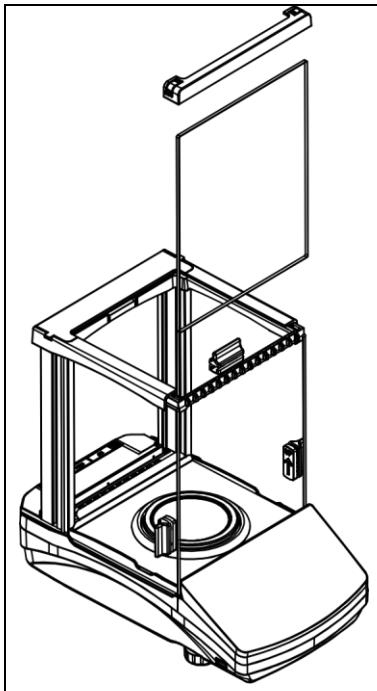	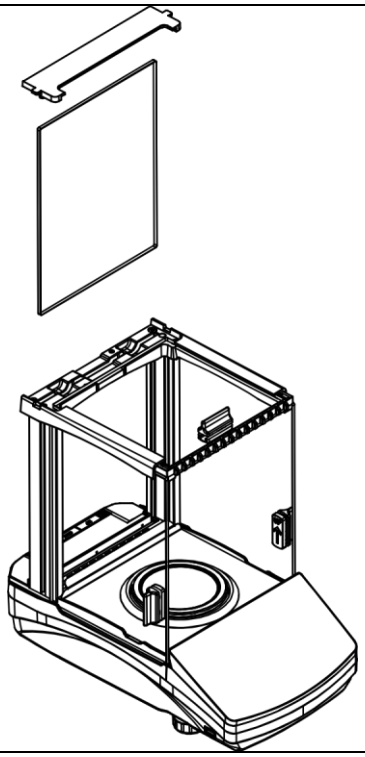
Detach the front part of the frame and take out the front pane.	Detach the back part of the frame and take out the back pane.

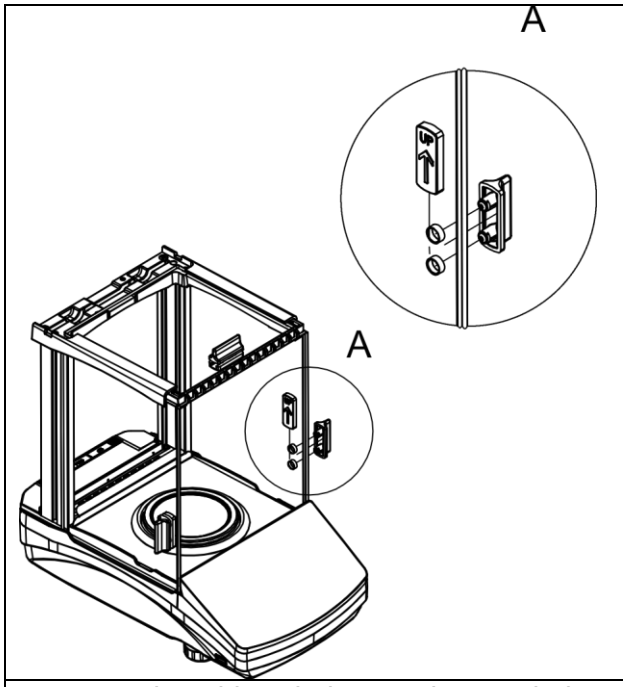	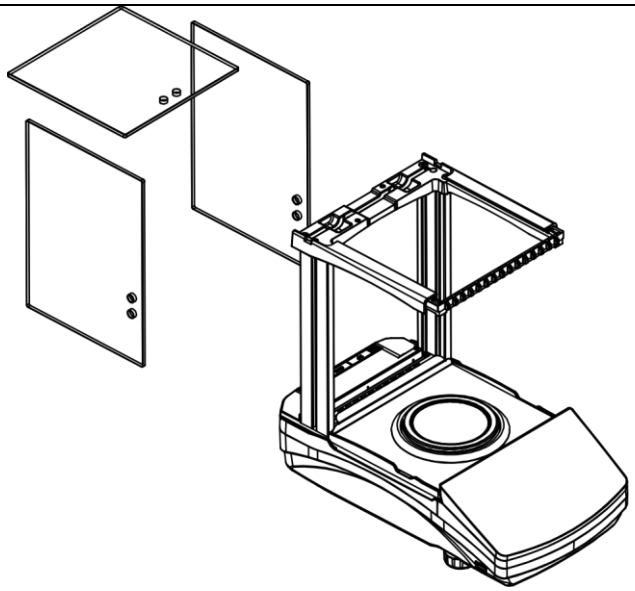
Remove the side window and top window handles.	Remove the left and the right side and top pane.
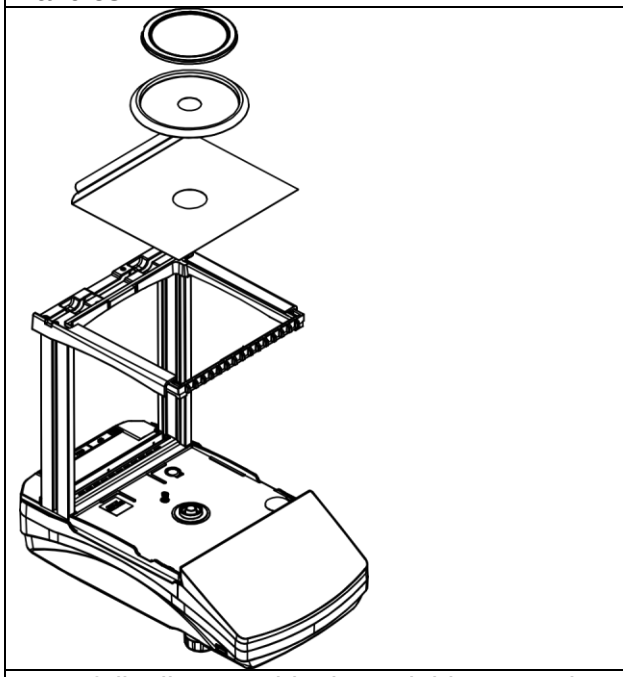	
Carefully disassemble the weighing pan, the draft shield and the bottom insert.	

Clean the weighing chamber and the panes. All the operations have to be done carefully. Pay special attention to the spot where the weighing pan is installed; dirt and other small elements might enter the balance construction through this opening. This may cause incorrect operation of the instrument.

PS X7 series balances d=0.001g; disassembly steps:

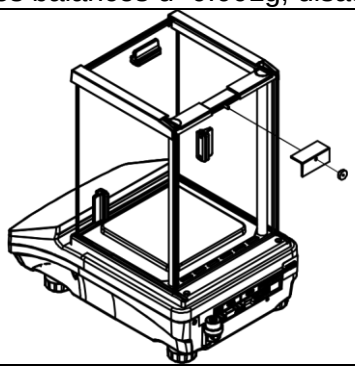	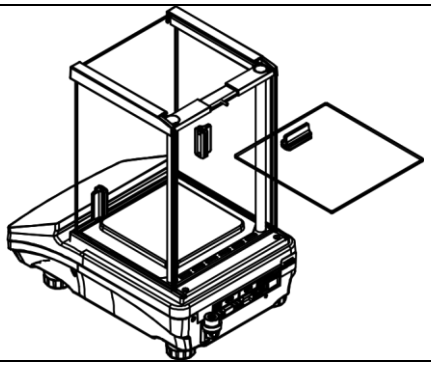
Unscrew a securing nut and disassemble the top pane protection.	Pull out the top pane from cabinet guides.
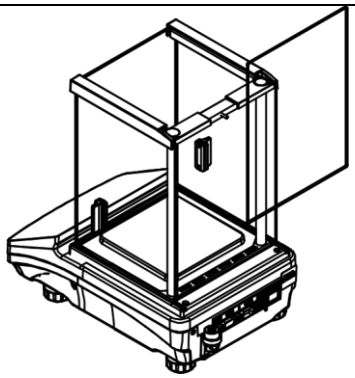	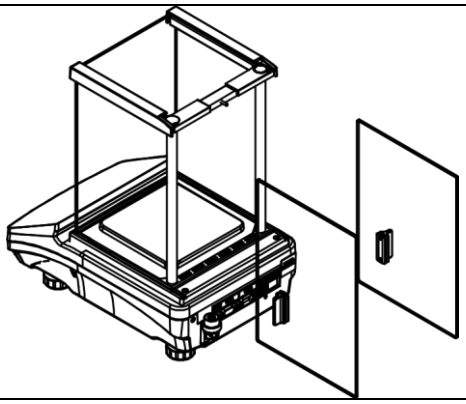
Take out the rear pane of the cabinet.	Pull out side panes of the cabinet.
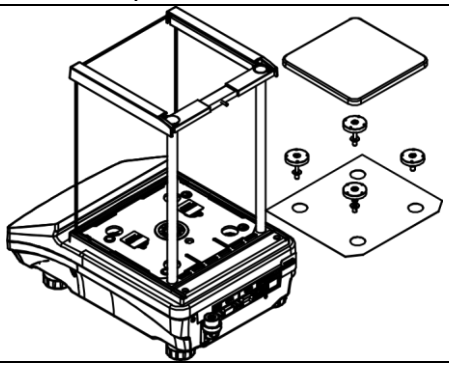	
Carefully disassemble the weighing pan, its mandrels and lower cover.	

Carefully clean the cabinet and panes after they have been disassembled. All activities must be taken with care, making sure pollutants and other minor elements do not penetrate the interior of the balance through holes that mandrels go into. It may cause the balance to malfunction.

Upon maintenance is completed carry out the same set of actions in a reverse order. Pay a special attention to the left and the right side panes, assembly them on the correct side of the balance.

3.5. Powering the Device

Balance can be connected to the mains only with a power adapter that comes standard with the particular model. Nominal power supply of the power adapter (specified on the power adapter data plate) should be compatible to the power from the mains.
Plug the balance to the mains – connect the power adapter to the socket, next connect its connector to port located at the back of the balance housing.
Test of the display unit takes place right after connecting the balance to the power, all the elements and pictograms are backlit for a short time. Next, the name and the program number appears, the indication gets to ZERO (displayed reading unit depends on the balance). During the balance start, the test of an internal mass adjustment mechanism occurs (single location and elevation of the internal mass adjustment).

If the indication is different than zero, please press →0← button.

CAUTION!
If the balance is "verified", automatic adjustment occurs right after switching the balance on.

3.6. Temperature stabilisation time.

Before start of measuring processes, it is necessary to wait until the balance reaches thermal stabilisation.
For balances that were stored in much lower temperatures before plugging to mains (e.g. during winter period), thermal stabilisation period shall take at least 4 hours for PS and WLC balances, and 8 hours for AS balances. During the thermal stabilization, the indications on a display panel can change. It is recommended that ambient temperature changes at place of use were insignificant (slow to change).

Thermal stabilization also applies to the level monitoring system of AS X7 balances.

3.7. Connecting additional hardware

Use only accessories and peripheral equipment recommended by the manufacturer. The balance must be disconnected from the mains before connecting or disconnecting any peripherals (printer, PC computer, computer keyboard). On connecting the peripherals, plug the balance to the mains.

4. START-UP

- Insert the power cable into the mains socket, and then power cable plug into the socket located at the back of the balance housing.
- If the balance does not activate automatically (*a LED light glows on the right side of the housing, below proximity sensors graphic design, and the* <> *pictogram shows up on the screen),* double click any place on the touch screen.
- The start-up procedure will be initiated automatically.
- After the end of the start-up procedure, the home screen of the program will be displayed.
- The balance activates with the unlogged operator (no operator). To start working, log in (the login procedure has been described further in the manual).

	Activate the balance without any load – with an empty weighing pan. *As per regulations of EN 45501 standard, the mass below -20d cannot not be displayed in verified balances. If the mass drops below this value, the home screen will show the <Low mass> message. This being the case, press →0← key to zero the balance.*

	Do not disconnect the balance from the mains during breaks between measuring series. It is advisable to press the OFF key on the right side of the screen to turn the balance screen off.
	The screen is inactive when the LED light on the right side of the housing glows, below proximity sensors graphic design, and when the screen cyclically displays <> pictogram.
	To turn the balance on, double click any place of the touch screen. After the end of the start-up procedure, the balance will be ready for further weighing.

5. KEYBOARD – BUTTONS FUNCTIONS

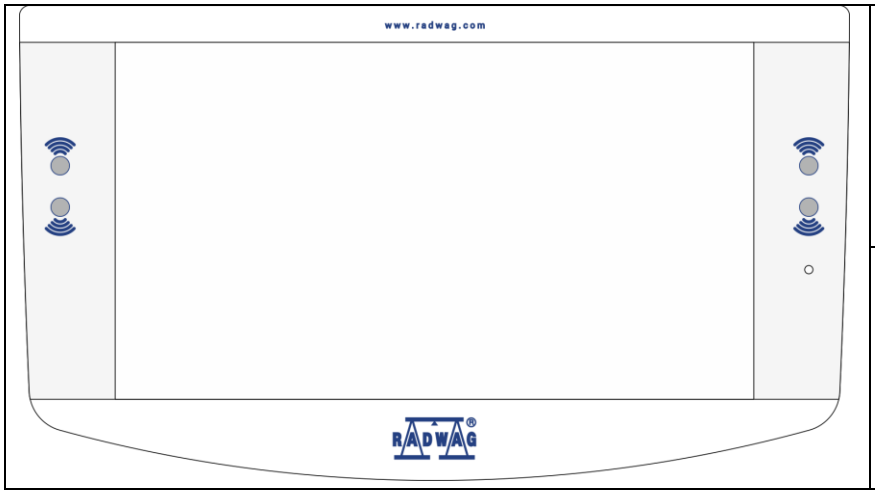

	Proximity sensors that you can freely program useful functions for.
	The LED light that informs you about inactive screen.

AKRIBIS · www.akribis.info · contacto@akribis.info

6. WEIGHING MODE HOME SCREEN

⚠	*Some screen views showed in the manual are for reference and do not reflect a real design of the balance screen.*

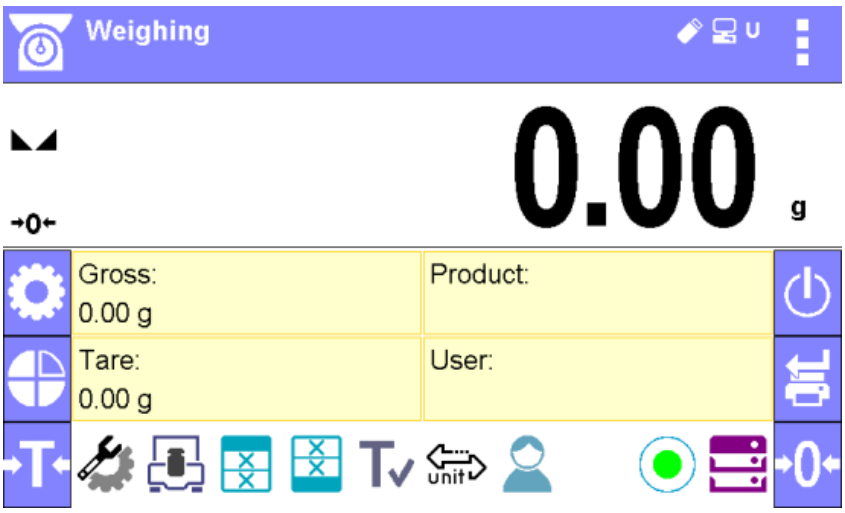

The home screen of balance software can be divided into 5 sections:

- Top section displaying data on active working mode (pictogram and name), metrologically important data and button enabling selection of functions available for a particular working mode.

The top bar displays the following information:

Weighing	Working mode name and symbol.
	Symbol informing that wireless communication is on.
	Symbol informing that communication with a USB flash drive is on.
	Symbol informing that PC keyboard is connected.
	Symbol informing that printer is connected via USB.
	Symbol informing that communication with a PC computer is on.
	Symbol informing that data is saved to moisture illigra memory.
A	Symbol informing that ACAI function in Parts Counting mode is active.
E2R	Symbol informing that the moisture illigra connects with E2R system.
F	Symbol informing that the weighing profile is active.

- Section presenting the weighing result.

- Section comprising supplementary information on currently performed operations, and function buttons.

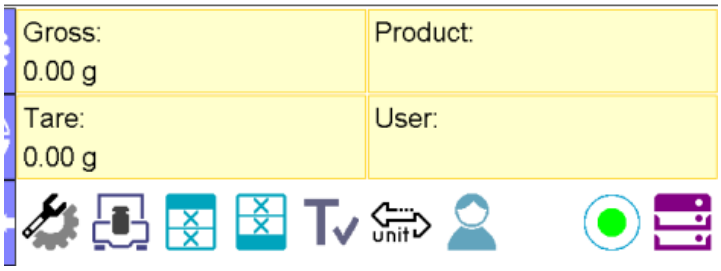

CAUTION!
Data and buttons contained in the workspace are freely configurable. For detailed information on data and buttons configuration refer to section 7 of this user manual.

- On the left side of the information field are functional keys that cannot be deleted or modified:

Key	Description
	<Setup> functional key to enter the main menu.
	<Profile> functional key to select the balance working profile.
	Balance tarring procedure.

- On the right side of the information field are further functional keys that cannot be deleted or modified:

Key	Description
	Balance screen shutdown.
	Approval of changes/Printout of the result in the printer or computer.
	Balance zeroing procedure.

7. OPERATING BALANCE MENU

Operation of balance software menu is intuitive and uncomplicated. The touch panel makes the software operation easy. Pressing a function key, a soft key or an area on the display initiates an assigned function or process
Touch screen operation is also possible while wearing gloves.

7.1. Entering balance menu

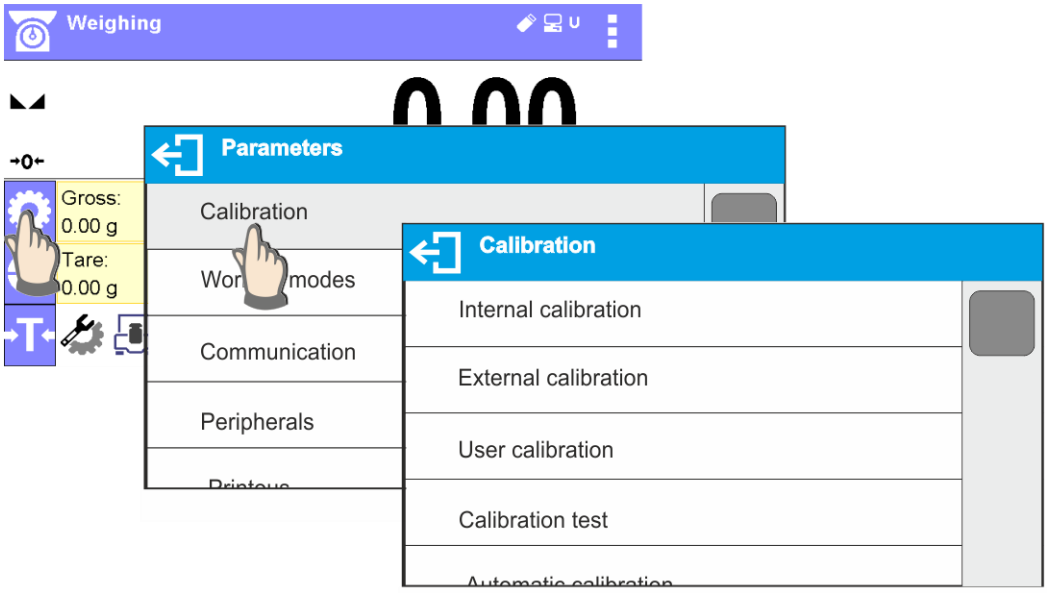

In order to enter balance menu, press <PARAMETERS> button. Clicking any button comprised within information section, or clicking any button with particular parameter name, results with change of colour. This is for signalling purposes. If a given area has any function or action assigned, then it is performed automatically upon clicking (e.g. adjustment procedure), respectively a particular window with parameters or list of appropriate settings is displayed.

7.2. Screen scrolling

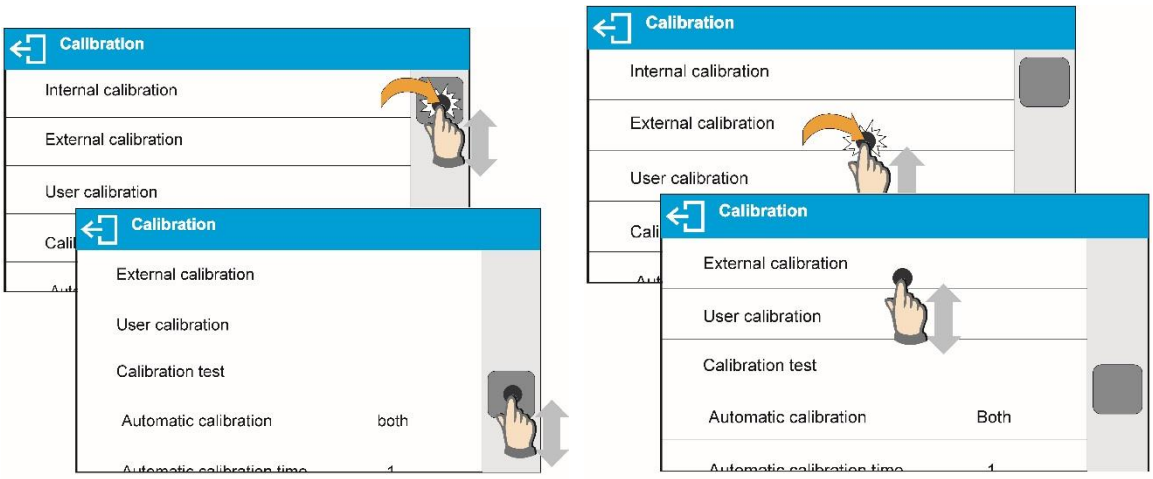

There are two methods for scrolling the screen of parameters window. The first one requires pressing, holding down and scrolling up or down the scrollbar located on the left. The second one requires pressing, holding down and scrolling up or down any point of the displayed window.

7.3. Soft keys list

	Press to enter the main menu.		Press to clear the editing field.
	Press to scroll the menu „up”, or „down”.		Press to enable / disable an on-screen keyboard.
	Press to confirm changes.		Press to export databases (key active upon plugging a pen drive).
	Press to resign form introducing function modifications.		Press to import databases (key active upon plugging a pen drive).
	Press to add a new record to a database.		Exporting the specific report or report base in the form of a .txt file (the key is active after you have connected the pendrive mass memory device).
	Press to print out a particular record from a database.		Press to search particular database entry by name.
	Press to select variables, out of the list, for a printout.		Press to search particular database entry by code.
			Press to delete database’s content

7.4. Runnining software functions

- Quick access key,

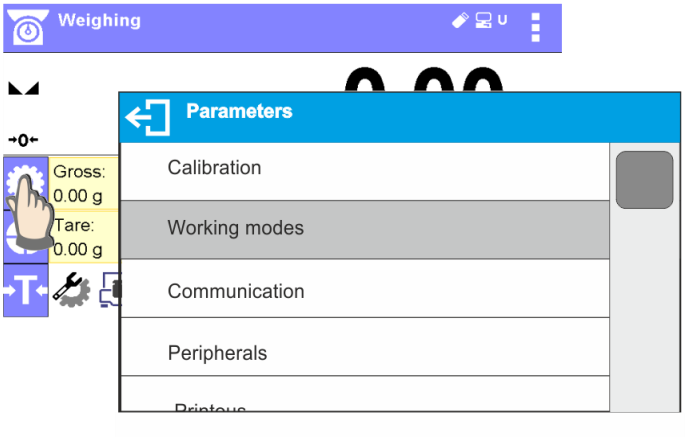

Press to enter parameters setup.

- Label,

Press to enter tare value.

- Text field with function assigned,

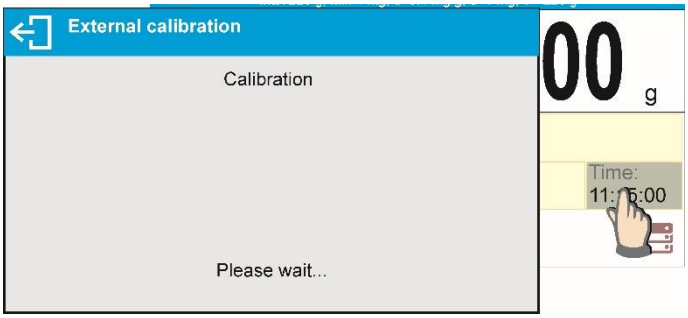

Press to develop an internal adjustment operation (internal adjustment function is assigned to the text field).

- Functions selections pictogram,

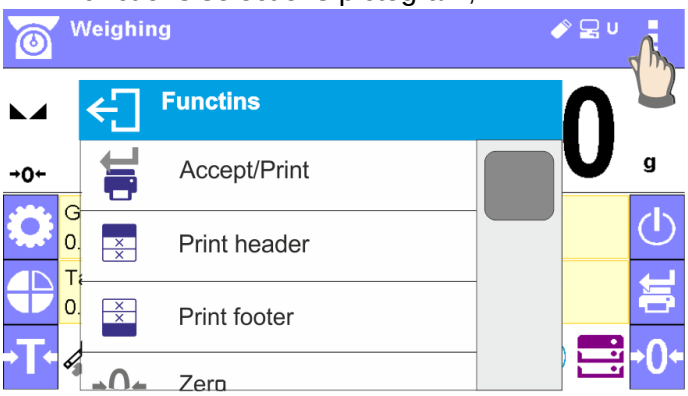

Press to select respective function out of list comprising functions available for a particular working mode.

CAUTION!
For instruction on configuration of buttons, labels and text fields refer to section 7.6 of this user manual.

7.5. Return to Weighing Mode

Introduced modifications are automatically saved in menu on return to the weighing mode.

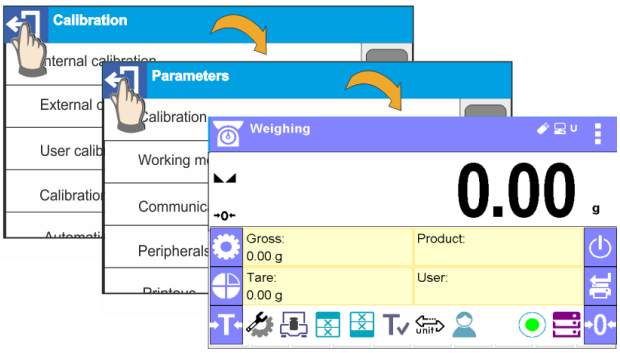

press soft key repeatedly, keep pressing the key until the balance home screen is displayed

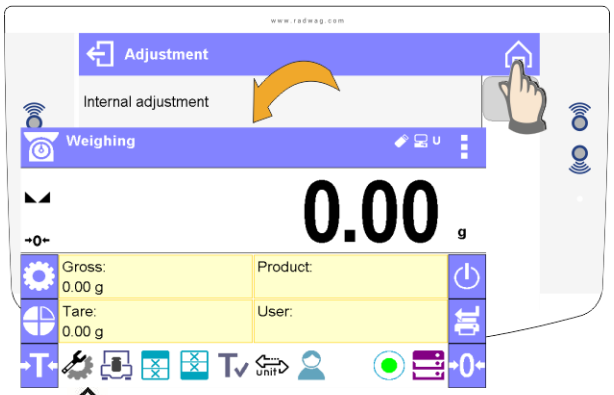

press soft key located on the balance overlay for immediate display of a home screen

7.6. Buttons, Labels and Text Fields Configuration

Area beneath weight indication section can be freely programmed. It is divided into active fields taking form of a table: 3 rows, 10 columns.

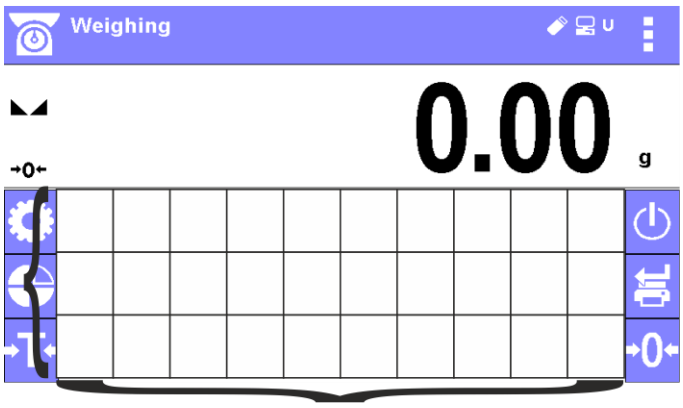

The division lines presented above are not visible on the balance screen, they serve only for informative purposes.
The keys on the left and right side of this field are permanent and cannot be deleted or modified.
The items below show examples of graphic designs that demonstrate the code of conduct and do not fully reflect the real views in the balance.

This section is designed to comprise user-selected widgets: buttons, labels, text fields, bar graphs.

- **button** – pictogram to which a particular function is assigned, the function is triggered upon pressing the pictogram;
- **label** – field for information, its content is stable. The content depends on displayed option, wherein the options change in course of balance operation. The label may be active or passive. Active label, when pressed, triggers function that is assigned to it, e.g. selecting product out of products database. Passive label provides you with information on current state, no function is assigned to it;
- **text field** – field for information, both content (text and variables of line 1 and 2) and function assigned to text field are programmable. The field may be active or passive. Its operation is likewise as for label, the only difference is that for the text field it is the user who specifies which function is to be assigned to it. The function does not have to refer to displayed information, e.g. the text field displaying date and time may trigger balance calibration upon being pressed;
- **bar graph** – option available for *Checkweighing* and *Dosing* modes, field providing information on Min and Max threshold – *Checkweighing* mode, and target weight – *Dosing* mode, the given information is presented in a graphic form, bar graph colour informs whether weight stays within the specified tolerance or is out of it.

The section may be set up freely in a way matching your needs. Each of the modes may be configured independently.

Set up rules:
1. Widgets dimensions (width x height)
    - button – 1x1
    - label – 2x1; 3x1; 4x1; 5x1
    - text field – 2x1; 3x1; 4x1; 5x1; 6x1; 7x1; 8x1; 9x1; 10x1
    - bar graph – 5x1; 10x1

To quickly restore the default widgets layout press any widget and hold it until a window with available options is displayed. Select **<Default screen settings>** and confirm.

Exemplary arrangement and dimensions of labels and text fields.

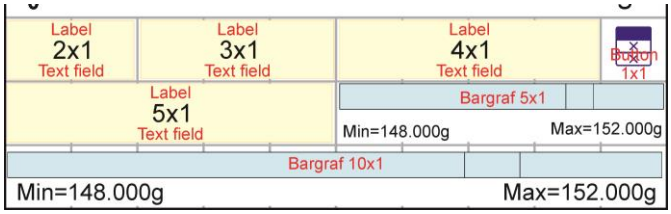

2. Always click extreme left side of a particular field that is to hold a selected widget.

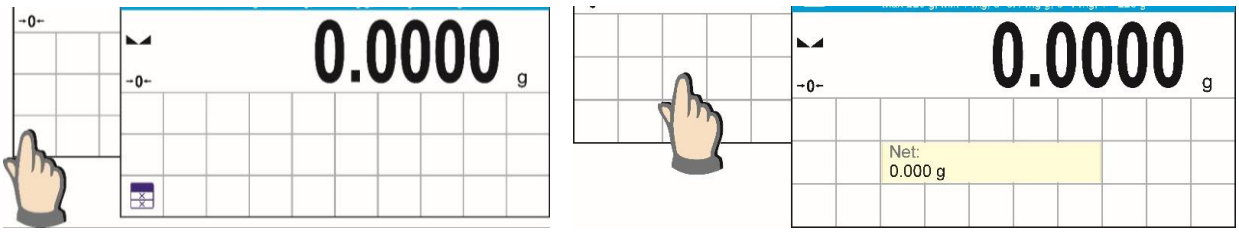

3. A new widget can only take such area that holds no other widgets yet. The software automatically detects which widgets can be applied for a particular area, this is conditioned by widget dimensions.

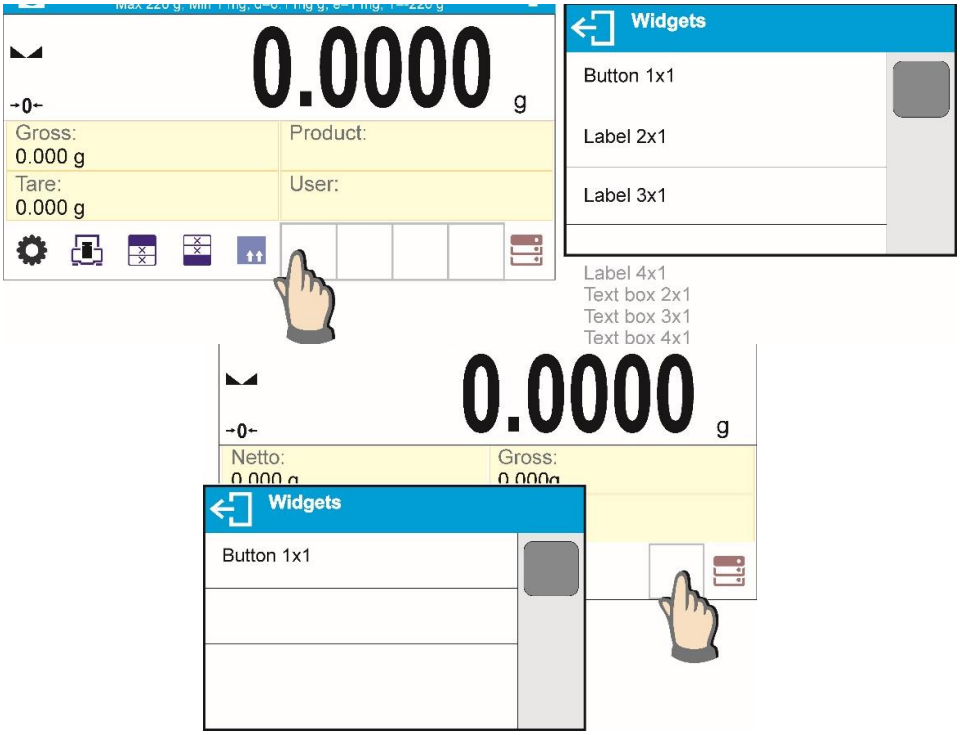

4. It is possible to change functions assigned to an already applied widget. The applied widget, if not needed, can be removed.

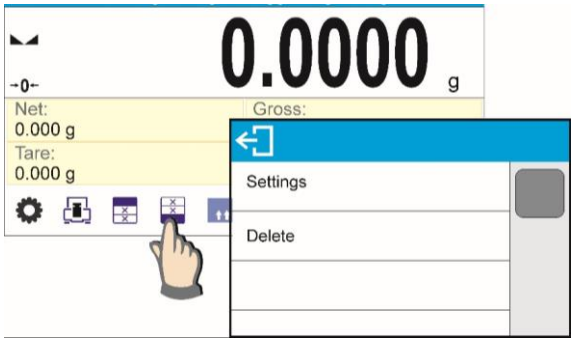

5. In order to rearrange widgets layout, it is necessary to delete already applied widgets first, and define new arrangement of buttons, labels and text fields next.

7.6.1. Quick Access Keys

You can define quick access keys, the keys are displayed underneath weight indication section. Quick access key provides direct access to the most frequently operated functions, it is selected from a list of available keys.

Procedure:

Press and hold for a while the spot where a given key is to be placed.

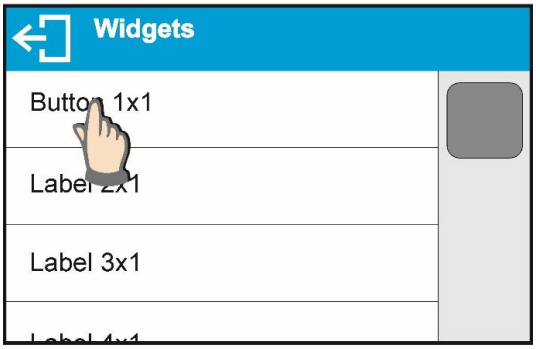

Select option: key 1x1.

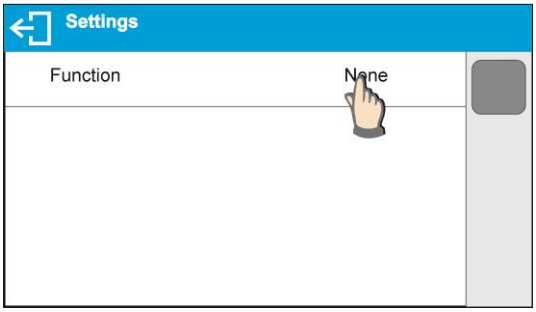

Enter particular key setup.

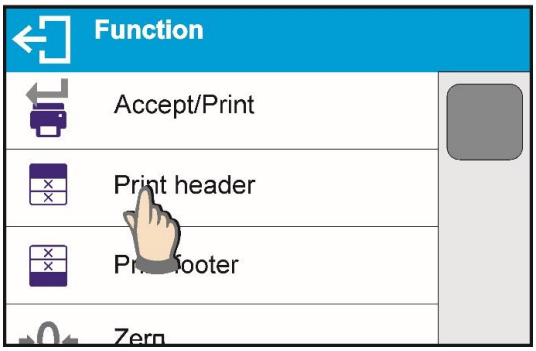

Select the key.

The selected key is displayed automatically on a home screen.

Quick access keys list:

Key	Function	Modes featuring the key
	Accept/Print	All modes
	Print header	All modes
	Print footer	All modes
	Zero	All modes
	Tare	All modes
	Change unit	All modes (Parts Counting and Percent Weighing modes excluded)
	Select unit	All modes (Parts Counting and Percent Weighing modes excluded)
	Parameters	All modes
	Databases	All modes
	User	All modes
	Product	All modes
	Customer	All modes
	Packaging	All modes
	Adjustment	All modes
	Variable 1	All modes
	Variable 2	All modes
	Variable 3	All modes
	Hide/show last digit	All modes (Parts Counting and Percent Weighing modes excluded)
	Working mode parameters	All modes
	Set part mass	Parts Counting mode exclusively
	Determine part mass	Parts Counting mode exclusively
	Determine mass using 5 parts	Parts Counting mode exclusively
	Determine mass using 10 parts	Parts Counting mode exclusively

	Determine mass using 20 parts	Parts Counting mode exclusively
	Determine mass using 50 parts	Parts Counting mode exclusively
	Determine mass using 100 parts	Parts Counting mode exclusively
	Thresholds	Checkweighing mode exclusively
	Min threshold	Checkweighing mode exclusively
	Max threshold	Checkweighing mode exclusively
	Target value	Dosing mode exclusively
	Set reference mass	Percent Weighing mode exclusively
	Determine reference mass (set as 100%)	Percent Weighing mode exclusively
	Start	Solids and Liquids Density modes and Formulations mode
	Results	Statistics mode exclusively
	Finish	Statistics mode exclusively
	Finish	Peak Hold mode exclusively
	Formulation	Formulations mode exclusively
	Profile	All modes
	Level *(only AS X7 balances)*	All modes
	Turn the balance screen off	All modes

7.6.2. Labels

You can select label size and type of information to be displayed for a particular label.
In order to select a particular label, use a list of available labels. Upon label selection, specify type of information to be displayed for the label. The selected label is displayed automatically on a specified home screen spot.

Procedure:

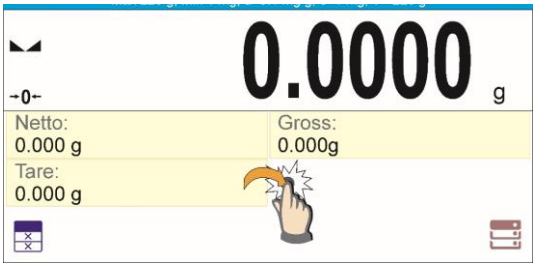

Press and hold for a while the spot where a given label is to be placed.

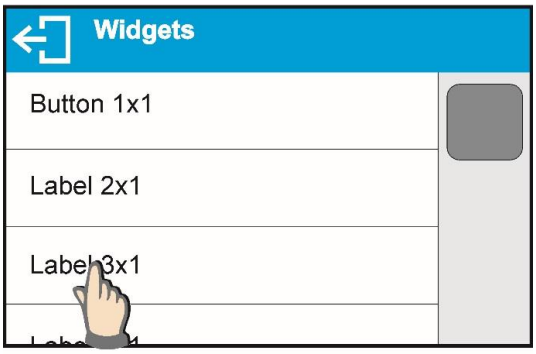

Select a label and its size.

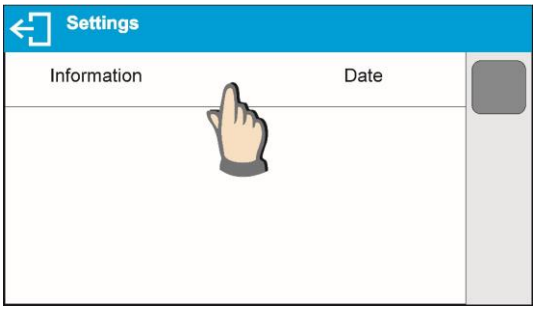

Label settings window opens, click INFORMATION field in order to see a list of information type available for the selected label.

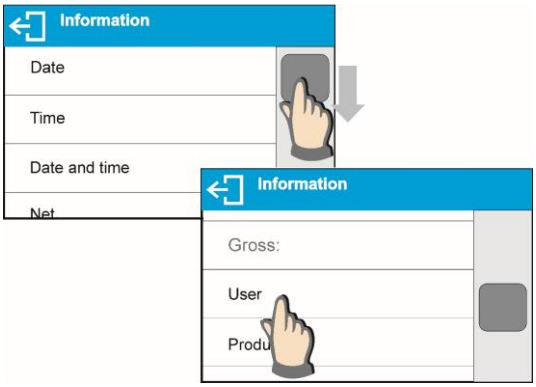

Select data to be displayed.

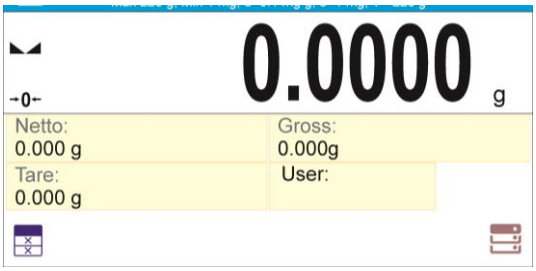

The selected label is displayed automatically on a home screen.

Information type:

Label information type	Modes featuring the information
Date	All modes
Time	All modes
Date and time	All modes
Net weight	All modes
Tare	All modes
Gross weight	All modes
User	All modes
Product	All modes
Packaging	All modes
Customer	All modes
Variable 1	All modes
Variable 2	All modes
Variable 3	All modes
MSW value	Weighing mode exclusively
MSW tare	Weighing mode exclusively
MSW status	Weighing mode exclusively
Part mass	Parts Counting mode exclusively
Thresholds	Checkweighing mode exclusively
Min threshold	Checkweighing mode exclusively
Max threshold	Checkweighing mode exclusively
Target value	Dosing mode exclusively
Reference mass	Percent Weighing mode exclusively
Weighing in air	Solids and Liquids Density Determination modes exclusively
Weighing in liquid	Solids and Liquids Density Determination modes exclusively
Liquid	Solids Density Determination mode exclusively
Temperature	Solids Density Determination mode exclusively
Liquid density	Solids Density Determination mode exclusively
Sinker volume	Liquids Density Determination mode exclusively
Number	Statistics mode exclusively
Sum	Statistics mode exclusively
Mean	Statistics mode exclusively
Min	Statistics mode exclusively
Max	Statistics mode exclusively
Difference	Statistics mode exclusively
SDVP *(standard deviation of population)*	Statistics mode exclusively
SDVS *(standard deviation of a sample)*	Statistics mode exclusively
RDVP *(coefficient of variance for population)*	Statistics mode exclusively
RDVP *(coefficient of variance for the sample)*	Statistics mode exclusively
Threshold	Peak Hold mode exclusively
Formulation	Formulation mode exclusively
Sum	Formulation mode exclusively
Target value	Formulation mode exclusively

The above presented information type has been designed for WEIGHING working mode.
The information may vary depending on the working mode and functions relating to the particular mode. Detailed description for a given information type is provided within section overviewing a respective mode.

7.6.3. Text fields

You can select text field size and type of information to be displayed in the first and the second line of the field, plus you can decide on a function that is to be assigned to a particular text field.
Upon completed setup operation, the selected text field is displayed automatically on a specified home screen spot.

Procedure:

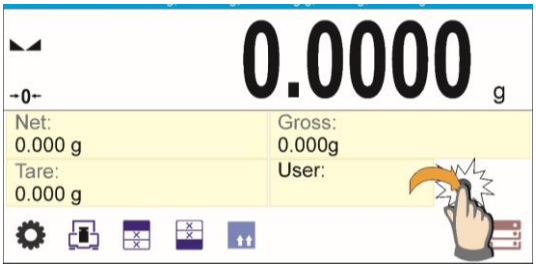

Press and hold for a while the spot where a given key is to be placed.

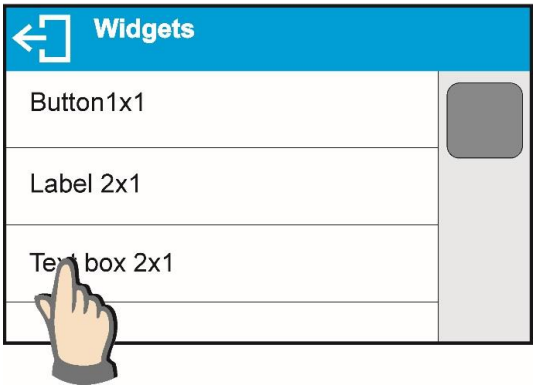

Select text field and its size.

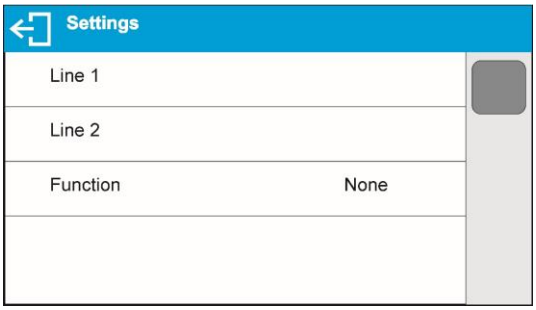

Text field settings window opens.
Define particular text field parameters:

- Line 1: e.g. text <Time:>,

- Line 2: e.g. variable {3}, variable for current time displaying (other variables refer to point for non-standard printouts defining),

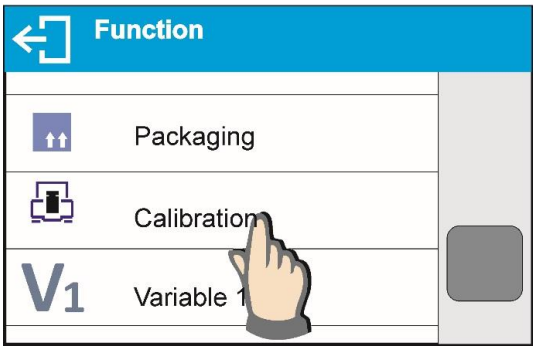

- function: e.g. adjustment.

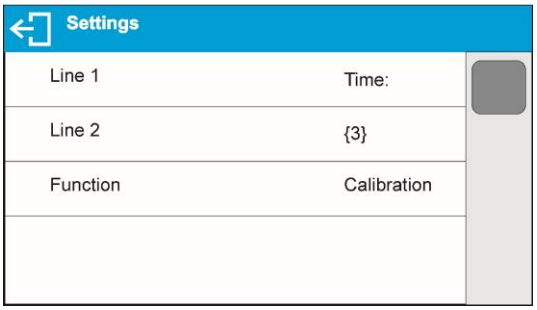

When all text field parameters have been defined, the window displays respective values.

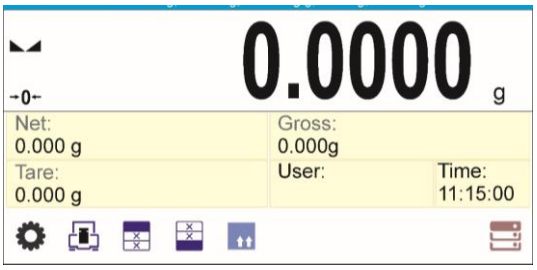

The defined text field is displayed automatically on a home screen.

7.6.4. Bar graphs

Bar graph function is accessible for all weighing modes. The bar graph presents in a graphic form how much of balance capacity is in use. Additionally it shows Min and Max thresholds positions for Checkweighing mode, and for Dosing mode it shows target weight value along with permissible tolerance.
You can select bar graph size and turn on/off <Zoom> function. This function rescales bar graph in order to improve visualization of indication.

Procedure:

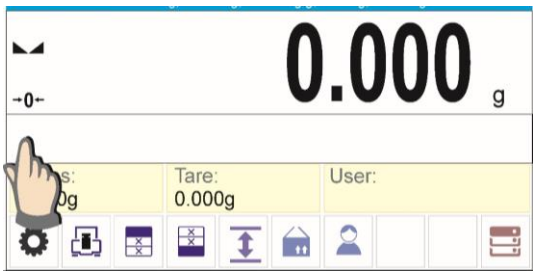

Press and hold for a while the spot where bar graph is to be placed.

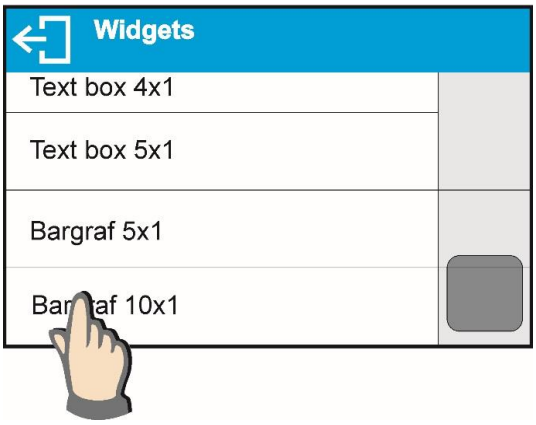

Select bar graph and its size.

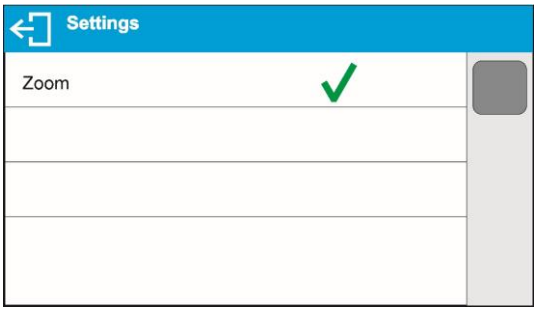

Bar graph settings window opens.

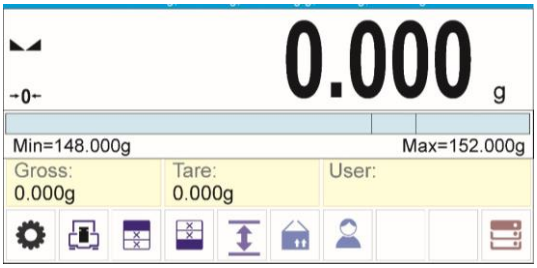

The selected bar graph is displayed automatically on a home screen.

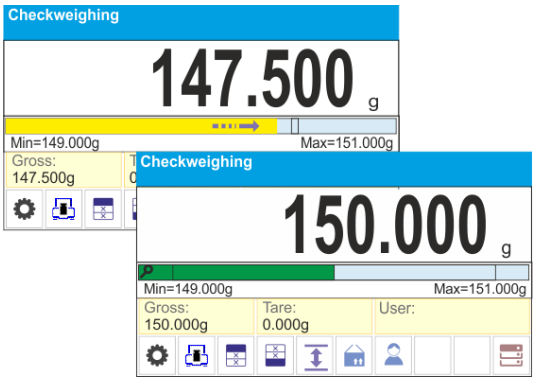

Example for bar graph with <Zoom> function on:

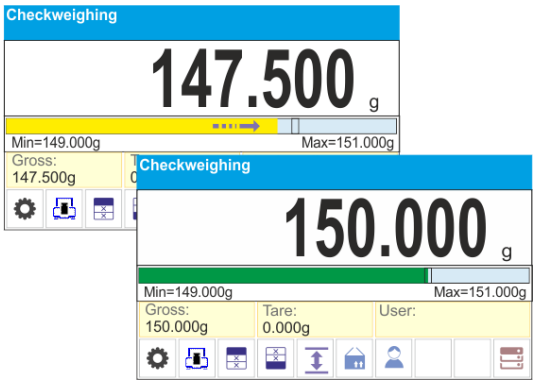

Example for bar graph with <Zoom> function off:

8. ADMINISTRATOR PANEL

This menu enables to determine: activities to be carried out by an operator with certain permissions, password strength and permissions for unlogged operator.

CAUTION: Only operator with Administrator permissions can modify permission-related parameters.

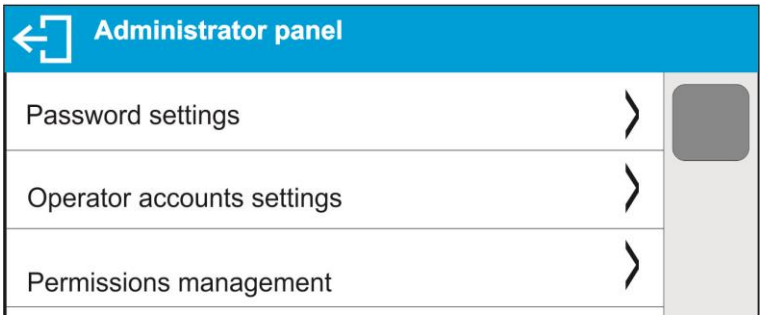

8.1. Password settings

This submenu is designed to set the password sophistication rate.

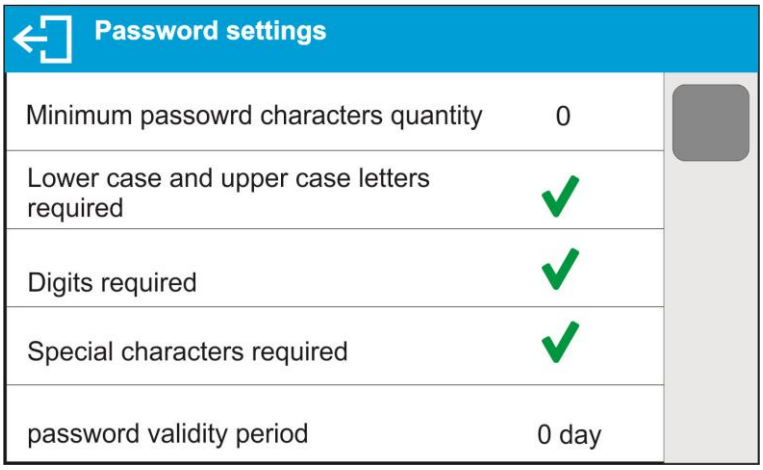

Minimum password characters quantity	Determining the quantity of characters in the operator's password. For the '0' value, set any quantity of characters.
Lower case and upper case letters required	Parameters specifying requirements regarding password characters type and format.
Digits required	
Special characters required	
Password validity period	Determining the time interval in days after which the password has to be changed. For the '0' value, password change is not required.

8.2. Operator accounts settings

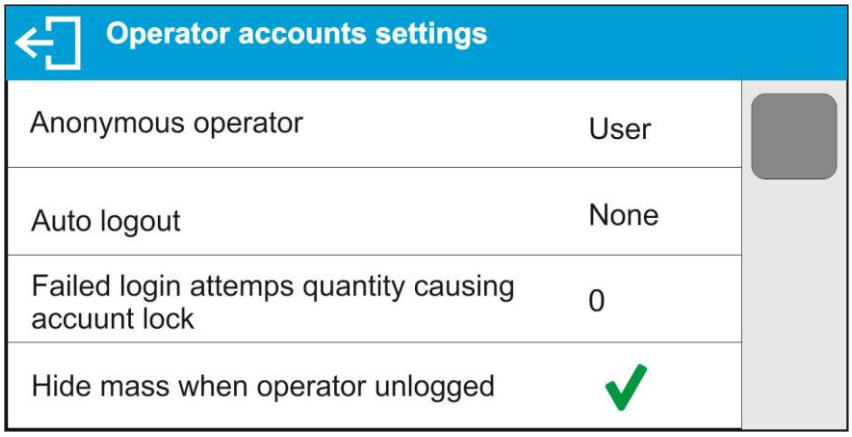

Unlogged operator permissions
The Administrator can assign an unlogged balance operator (so-called anonymous operator) with permissions.

Procedure:
Enter <Operator accounts settings> submenu, select <Anonymous operator> option, next set respective permissions: Guest, Operator, Advanced operator, Administrator.

Caution: An operator assigned with ***<Guest>*** *permission level is not permitted to modify program settings.*

Auto logout
With Auto logout function on, the operator is logged out automatically if the balance is not operated within a specified time interval, given in minutes.
By default, the function is disabled (<None> entry set).

Procedure:
Enter <Operator accounts settings> submenu, select <Auto logout> parameter, next set respective value: none/3/5/15/30/60. The time is given in [min].

Failed login attempts quantity causing account lock
An option to set the number of incorrect logins by an operator that will result in account access being blocked.
By default, the function is disabled (<0> entry set).

Procedure:
Enter <Operator accounts settings> submenu, select <Failed login attempts quantity causing account lock> parameter, next set respective value:

Caution: *after the occurrence of incorrect logins (mistakes when entering the password) in the number specified in this parameter, the account of the given operator gets blocked. In this case, the administrator must intervene to unblock the account.*

Hide mass when operator unlogged
Option to disable the mass result display if the operator is not logged in.
By default, the function is disabled (<None> entry set).

Procedure:
Enter <Hide mass when operator unlogged> option and set it to active.

8.3. Permissions management

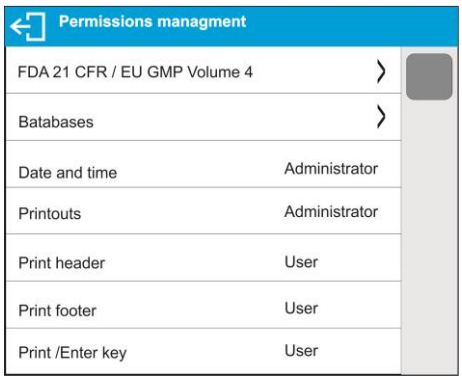

Caution: *When the* ***<Guest>*** *option is set for individual parameters, their settings can be freely accessed (there is no need to log in).*

Each option can be assigned with a permission level to edit it.
Parameter values:

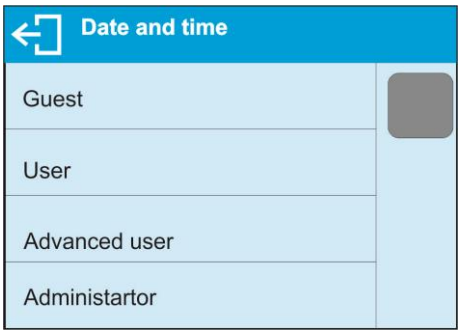

Databases

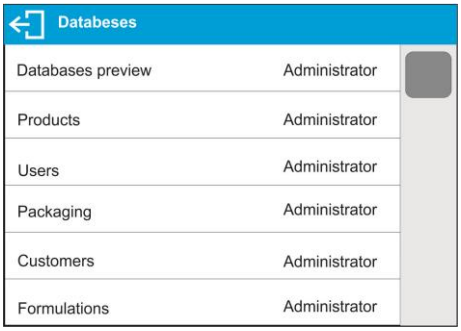

Default balance settings enable an operator who is logged as the **Administrator** to modify settings of particular databases.
The values can be changed depending on the needs.
The editing permissions for the other options available in this menu can be changed on a similar basis.

9. WEIGHING OPERATION

Load a weighed object on a balance weighing pan. On stabilization of weighing result, indicated by stability marker ◣◢ visible on the left side of balance display, read the measurement result.
Record / printout of the measurement result is available on pressing <PRINT> key:

- for verified balances – only stable measurement result can be saved or printed (stability marker ◣◢ visible on balance's display),
- for non-verified balances – stable or unstable measurement result can be saved or printed (regardless of stability marker ◣◢ absence). If unstable measurement result is printed then it is accompanied by question mark <**?**> in front of printed mass value.

9.1. Good weighing practice

In order to ensure long lasting use of a balance plus correct and reliable measurement of weighed loads, follow below procedures:

- Start the balance with no load on the weighing pan (permissible value of load on the weighing pan on balance start is ±10% of its maximum capacity).

- Load the weighing pan steadily avoiding shocks:

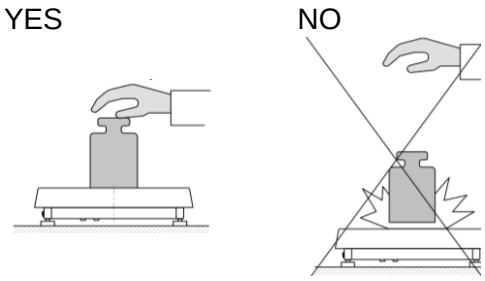

- Place weighed loads centrally on the weighing pan:

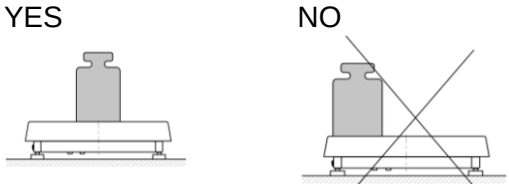

- Avoid side loading, in particular side shocks:

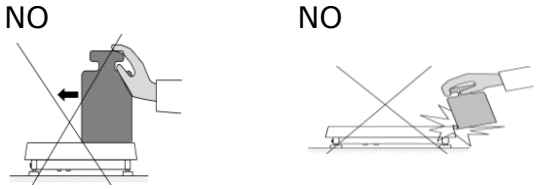

Prior to weighing or in the case of ambient condition changes, it is necessary to carry out balance adjustment.

- Prior to the measurement, it is recommended to load the weighing pan, several times, with mass close to the maximum capacity. In the case of instruments offering two reading units (d), the initial load of the weighing pan depends on the reading unit value.

  Example: For AS 82/220.X7 balances with d_1=0.01 mg and d_2=0.1 mg load the weighing pan as follows: 50 g weight for easurements with d_1=0.01 mg and 200 g weight for measurements with d_2=0.1 mg.

- Make sure that the unloaded weighing instrument indicates zero (→0←pictogram) and check whether the measurement is stable (pictogram ◣◢); if ot, press →0← key.

- Press unit key to set the unit.

	Do not disconnect the balance from the mains during breaks between measuring series. It is advisable to press the OFF key on the right side of the screen to turn the balance screen off.
	The screen is inactive when the LED light on the right side of the housing glows, below proximity sensors graphic design, and when the screen cyclically displays <*double tap on screen to turn device on*> message.
	To turn the balance on, double click any place of the touch screen. After the end of the start-up procedure, the balance will be ready for further weighing.

9.2. Logging

Full access to user parameters and to editing databases requires logging as an operator with **<Administrator>** permissions level. The logging procedure should be carried out on each switching on of the balance.

First Log In operation – procedure:

- Run home screen and press <> button, operators database window opens with list of available users,
- Select <Admin> option, the software activates an on-screen keyboard, use it to enter operator's password: „1111",
- Press ✓ button to confirm,
- Home screen of the software is displayed again automatically,
- When logged, add users and set the permissions levels (for the procedure of assigning permissions levels read section 25).

On future Logging In, select a user from the list and enter the password, the software initiates operation with permissions level set for the selected user.

Log out operation – procedure:

- Run home screen and press **<>** button, operators database window opens,
- Press **<Log out>** soft key (located as position no. 1 in the list of operators),
- Home screen of the software is displayed again automatically.

Permissions levels
Balance software comprises 4 permissions levels: administrator, advanced operator, user, guest.

Permissions level dependent access to edition of user parameters, databases and software functions.

Permissions levels	*Enabled operations*
Guest	Minimum permission level
User	Free editing of parameters of <Readout> submenu. Modification of settings for <Misc.> parameter group, except for settings for <Date and Time>. The operator can start and carry out all weighing processes. The operator can preview information recorded in <Databases>, (s)he can define universal variables.

Advanced User	Free editing of parameters of the following submenus: <Readout>; <Working modes>; <Communication>; <Peripherals>; <Misc.>. Access to <Date and Time> submenu denied. The advanced operator can start and carry out all weighing processes.
Administrator	Access to all user parameters and functions, editing databases enabled.

9.3. Units

UNITS parameter group enables you to change availability of mass units (the change can be performed in-course of balance operation), and to define two custom units, thus positively effecting comfort and speed of operation. It is possible to change unit to other than unit [g] during weighing process or during operation of other modes. Working modes *Parts Counting* and *Percent Weighing* are exceptions.

9.4. Weighing unit selection

Change of weighing unit is carried out by pressing the weighing unit icon visible next to the value of measurement result, or by clicking key (if displayed in an information section). Clicking the unit triggers its replacement, the clicked unit is replaced with the unit that is next on the list of available units.
Another option for unit replacement is selecting a particular unit out of the units list, to view the list click key (if displayed in an information section).

Units list:

Unit	Denotation	Verified balance	Verified balance	Denotation	Verified balance
gram	[g]	tak	Taele Tajwan	[tlt]	nie
miligram	[mg]	tak*	Taele Chiny	[tlc]	nie
kilogram	[kg]	tak*	Momme	[mom]	nie
karat	[ct]	tak*	Grain	[gr]	nie
funt	[lb]	nie	Newton	[N]	nie
uncja	[oz]	nie	Tical	[ti]	nie
uncja troy	[ozt]	nie	baht	[baht]	nie
pennyweight	[dwt]	nie	tola	[tola]	nie
Taele Hongkong	[tlh]	nie	mesghal	[msg]	nie
Taele Singapur	[tls]	nie			

** - Accessibility of measuring units is conditioned by balance type.*

9.5. Weighing units accessibility

You may declare which units shall be accessible while selecting a temporary unit by means of unit key. Units with parameter value set to <Yes ✓> option are available for selection in particular working modes, i.e. modes facilitating units change.

	Units with parameter value set to <No ✓> option will not be accessible while operating the balance.

9.6. Start unit selection

Upon selection of start unit, the balance activates with the specified start unit for these modes where change of the unit is possible.
Ability of selecting a given unit depends on the balance status, i.e. if the balance is verified or not.

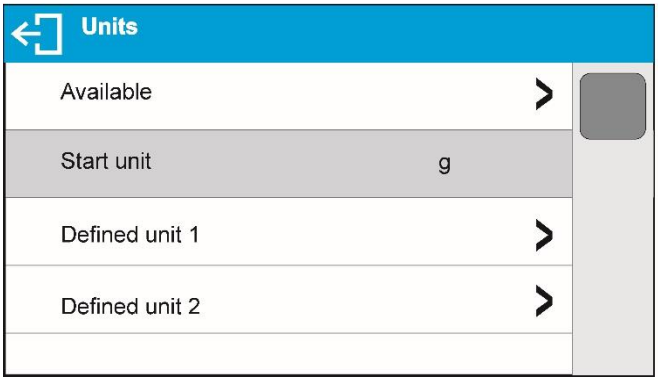

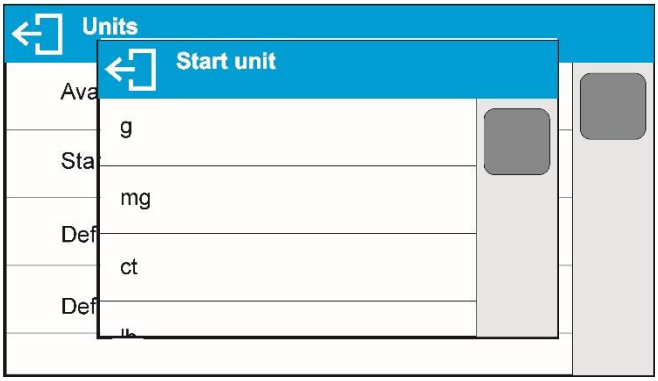

9.7. User-defined Unit

You may declare two units. Displayed value of a user-defined unit is a multiplication of measured mass value and a coefficient specified for the particular user-defined unit. The units can be freely named with use of 3 characters maximum. By default the names are displayed as **[u1]** – user unit 1, and **[u2]** – user unit 2.

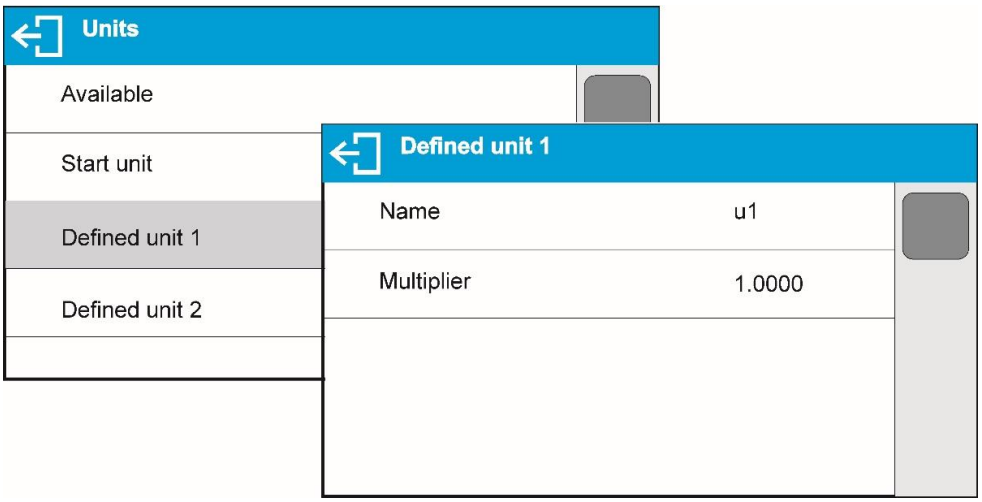

9.8. Balance zeroing

Zeroing is a function allowing to zero mass indication. In order to zero mass indication, press →0← button. Mass indication of zero value shall be displayed together with precise zero →0← and stability markers.
Zeroing process is an equivalent for determining new zero point, recognized by the balance as precise zero. Zeroing is possible only for stable status of display indication.

CAUTION!
Zeroing is only possible within the following ranges:
- for verified balance, from -3% to +1% of the balance's maximum capacity.
- for non-verified balance, from -3% to +95% of the balance's maximum capacity.

If the zeroing value is greater than the maximum capacity range specified above, the display will show the message Err2.

9.9. Balance taring

Taring is a function allowing to determine net weight of a measured object. In order to determine net weight of the object, place object's container (packaging) on the weighing pan, and on stabilization of measurement result press →T← key. The display indicates mass equal zero and symbols: Net and . On taking off the weighed load and its packaging from the weighing pan, the display indicates sum of total tared mass with minus sign.

The software enables assigning tare value to a database-stored product. Using this option, the software automatically uploads data on tare value for a particular product upon its selection from the database.

CAUTION!
Taring negative values is impossible. On taring negative values the balance responds with an error message. In such case, zero balance indication and repeat taring procedure.

Manual tare determination

Procedure:

- While in optional mode press quick access key T✓,
- An on-screen numeric keyboard is displayed,
- Enter tare value and press ✓ key,
- The balance returns to the weighing mode, and the display indicates entered tare value with minus '–' sign.

Deleting tare

The tare value indicated on balance display can be deleted by pressing →0← key on balance overlay, or by using programmable function key <Deactivate tare>.

PROCEDURE 1 – on taking the tared load off the weighing pan

- Press →0← key.
- The NET marker is deleted, and new zero point of the balance is determined.

PROCEDURE 2 – with tared load on the weighing pan

- Press →0← key.
- The NET marker is deleted, and new zero point of the balance is determined.

- When tare value exceeds 2% of the maximum capacity, respective message is displayed in order to inform a user about the fact.

PROCEDURE 3 - when the tared load is on the weighing pan or upon taking the tared load off the weighing pan:

- press <Tx> - deactivate tare programmable button,
- the NET marker is deleted,
- the display indicates tare value,
- to restore the last tare value press < T← > - restore tare button.

Selecting tare value out of TARE DATABASE

Procedure:

- While in optional mode, press button located in a top left hand corner of the mass display.
- Wait for a respective window to open, next select <PACKAGING>.
- Window with a list of tare values recorded into tare database opens.
- Select the packaging that is to be used.
- The balance returns to the weighing mode, and the display indicates selected tare value with a minus '–' sign.

Or

- While in optional mode, press button (if displayed on the screen),
- Window with a list of tare values recorded into tare database opens.
- Select the packaging that is to be used.
- The balance returns to the weighing mode, and the display indicates selected tare value with a minus '–' sign.

AUTOTARE function

Autotare function provides automatic taring of the packaging during the weighing process when packaging mass for each of the product is different. Description of this function is to be found further down this manual.

Deleting tare

Entered tare value can be deleted by pressing →0← button on the overlay or by entering tare value of 0.000g (see description above).

9.10. Weighing profile

To simplify weighing instrument operation, there are 4 profiles in the software. Their settings are selected and saved so that the weighings for respective requirements and conditions are optimized.
Profile settings apply to settings for specific working mode and are grouped in the following parameter: *Setup/Working modes/Weighing/Readout*.
For detailed description of these settings go to the next section of this user manual.

These are the following profiles:

- **User** – the basic profile for which filter settings are selected in a way enabling fast and precise weighing.
- **Fast** – profile enabling weighing of any mass regardless of the working mode. When running the balance for the first time, this profile is started automatically. For this profile the parameters are selected in a way enabling obtaining the measurement result as fast as it is possible,
- **Fast dosing** – the profile is dedicated for fast dosing.

- **Precision** – the profile is dedicated for precise dosing of any mass regardless of the working mode. For this profile the weighing process takes most of the time, but the result is the most accurate and precise,

Caution: You can modify all settings of User profile. Settings of other profiles (Fast, Fast dosing and Precision) can be modified only to a limited extend.

On the top bar of the display, pictogram (a letter) informing you on currently selected profile is displayed. The profile can be selected individually for working mode. The balance saves the last used profile in each working mode (with your modifications) and starts operation with that profile selected.

Profile pictogram:

No.	*Pictogram*	*Description*
1	**U**	**User** profile
2	**F**	**Fast** profile
3	**D**	**Fast dosing** profile
4	**P**	**Precision** profile

Profile selection.

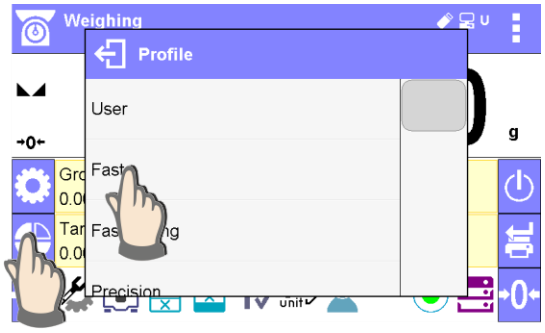

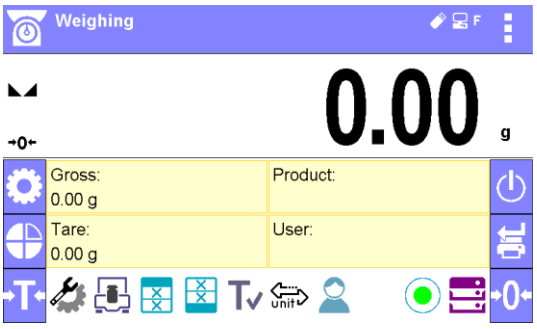

9.11. <Weighing> - readout mode settings

The software allows setup of operating parameters (filters, value release and autozero function, deleting the last digit and other settings) separately for each working mode. Only for **User** profile you can modify all settings. For other profiles (**Fast, Fast dosing, Precision**) **Filter and Value release** parameters are default and cannot be modified.
It enables customizing the instrument and utilizing its properties depending on your needs and expectations, or on specific requirements for selected working mode (e.g. DOSING); as a result the device operation is quick and easy.

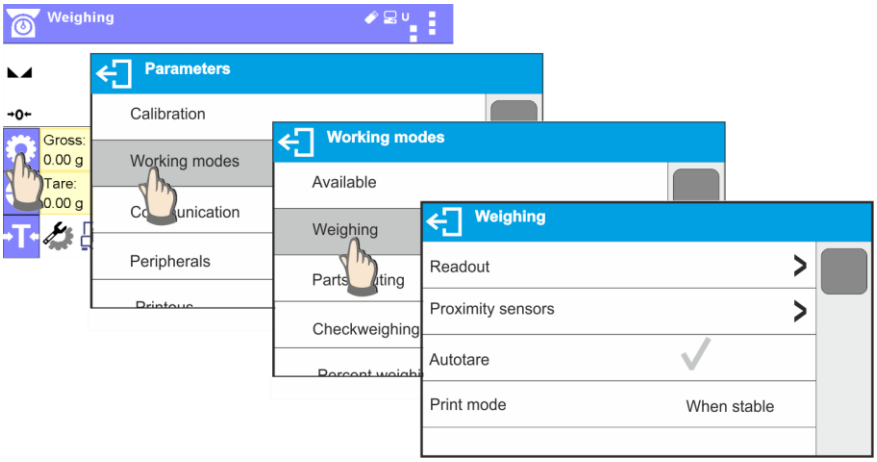

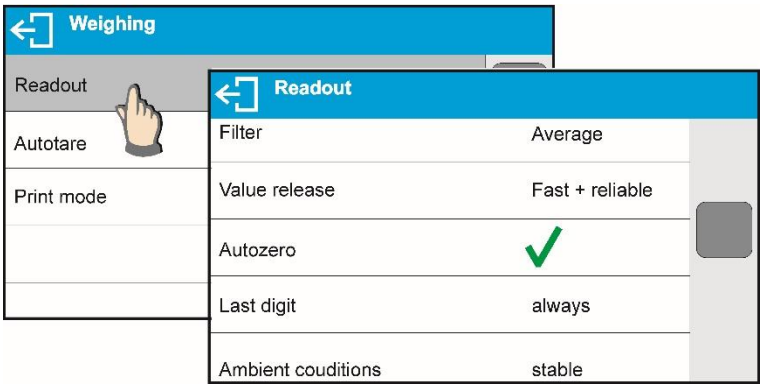

Filter level setting (function unavailable for the following profiles: Fast, Fast dosing, Precision)

Filter settings adjustment depends on the working environment. For the best possible conditions the filter can work in a very fast mode (V.FAST value for Filter parameter); however, if the conditions are poor (shakes, drafts), the filter should be set to slow or very slow option (SLOW or V. SLOW value for Filter parameter). The effectiveness of the filter is different throughout the weighing range. The filter works slower when “approaching” the weighed mass, it works more intensively for weighed mass within the set range of the filter (parameter for setting filter range is accessible only from the service menu – the user does not have any access to it).

Depending on the filter, the weighing time is shorter (V.FAST and FAST) or longer (SLOW and V. SLOW).

CAUTION!

The higher filter level, the longer weighing time.

Value release (function unavailable for the following profiles: Fast, Fast dosing, Precision)

Since ambient conditions at a workplace vary, it is necessary to determine the value release parameter in the most preferable way enabling balance adaptation, parameter options are: FAST.+REL., FAST or RELIABLE. Depending on the selected option, weighing time is either shorter or longer.

Autozero function

The software features an autozero function (Auto) ensuring precise mass indication. This function automatically controls and corrects zero indication. When Autozero is enabled, it compares balance indications at declared time interval e.g. 1s, provided that weighing pan is unloaded and display indication is close to zero. If results vary less than declared AUTOZERO range e.g. one division, balance zeroes automatically, marker of stable measurement result – ◣◢, and precise zero marker – →0← are displayed.

If AUTOZERO function is enabled, then each weighing process starts from precise zero point. There are, however, some cases when this function can be a disturbing factor for the measuring process; e.g. very slow placing of a load on the weighing pan (load adding). Here, zero indication correction can also correct actual indication of loaded mass.

Last digit display

Function enables displaying the last digit of decimal place for a weighing result. There are three available options:

- Always: all digits visible,
- Never: last digit is not displayed,
- When stable: last digit is displayed only for a stable weighing result.

Balance ambient conditions

Parameter relating to ambient and environmental conditions in which the balance operates. There are two options: STABLE and UNSTABLE. Selecting STABLE mode makes the balance work much faster, i.e. weighing takes much less time than for UNSBABLE mode. If the ambient conditions are unstable it is recommended to use UNSTABLE mode. By default, the parameter is set to STABLE option.

9.12. Proximity sensors

The balance features two proximity sensors enabling touch-free balance control.
The software detects two motions performed around the sensors:

1. hand in a close vicinity to the left sensor <Left sensor>,
2. hand in a close vicinity to the right sensor <Right sensor>.

Each motion can trigger optional balance function. For available functions list refer to point 7.6.1. Upon completed configuration procedure, the software runs function assigned to a particular proximity sensor having detected motion around it. To provide correct operation, it is necessary to set the right proximity sensors sensitivity (read point 9 for detailed instruction).

9.13. Autotare

Autotare is used for quick determination of net weight for loads with different tare values, wherein they are measured one after another.
When the function is active (<AUTOTARE> parameter set to <YES> option), the operating process takes the following steps:

- Make sure that the weighing pan is empty and press button responsible for zeroing,
- Put product packaging on a weighing pan (packaging weight value must be greater than set AUTO THRESH value),
- After measurement stabilization, **automatic taring** of the packaging mass proceeds (**Net** marker appears in the upper part of the display),
- Put product that is to be packed into the packaging;
- The display shows net weight of the product;
- Take off the product together with the packaging;
- The balance cancels tare value (packaging weight recorded in balance storage during the first step of the operating process) after the gross mass value (set in **<AUTO THRES>** parameter) has been exceeded; the entered tare value is cancelled automatically (**Net** marker disappears from the top section of the display), net weight is displayed;
- Put packaging of the next product on a weighing pan, automatic taring of the packaging weight proceeds after measurement stabilization (**Net** marker appears in the top section of the display);
- Put a next product that is to be packed.

For correct operation of the balance with AUTOTARE function it is necessary to adjust the threshold value.

<AUTO THRES> parameter is connected with the following functions:
- automatic tare,
- automatic operation,

No automatic taring takes place as long as the gross weight value stays within the range set in **<AUTO THRES>** parameter.

9.14. Print mode

Function designed to enable print mode setting, it activates key.
Print mode options:
- <WHEN STAB>, for this option stable measurement result, along with the settings for parameter <GLP PRINTOUT>, is sent to the printer port. On pressing key, when the result is not stable (no marker on a display), the balance software sends the measurement result to the port after reaching stability for the measurement.
- <EACH>, for this option every single pressing of button results with sending the measurement indication to the printer port along with the settings for <GLP PRINTOUT> parameter. Every single indication is sent (stable and unstable). For unstable indication <?> character appears at the beginning of the printing frame.
  This function applies to non-verified balances exclusively.
- <AUTO> - select this option to enable automatic printing of measurements. If this option has been selected, remember to set <AUTO THRES> parameter to suit your needs.

Automatic operation procedure:
- Press →0← button to zero the balance (marker of stable measurement and zero marker →0← are shown on a display)
- Deposit load, the balance sends the first stable measurement to the printer port,
- Remove the load from the pan,
- Next measurement is possible when the indication is lower than the set value of <AUTO THRES.> parameter (next measurement does not require zero value).

For automatic operation adjust the threshold value. For automatic operation, the measurement will not be send from the computer to the printer as long as the mass measurement stays within the set value range **<AUTO THRES>**.
<AUTO THRES> parameter is connected with the following functions:
- automatic tare,
- automatic operation,
- auto with interval.

<AUTO+INT.> select this option to start automatic printout and record of indications in Weighings database and Alibi database, carried out in a cyclic manner in a specified time interval. The interval is set in minutes, in parameter P2.2.3.3 <AUTO INT.>. Interval range is 1-9999 min.

CAUTION!
Each result is printed and recorded (stable and unstable for a non-verified balance, stable for a verified balance).
Automatic operation with interval starts at the moment of switching the function on and it lasts until it is switched off. The first stable weighing result of value greater than AUTO THRES value is printed as a first measuremnt. The following measurements are printed with frequency set in INTERVAL parameter. Automatic operation with interval stops when the option is off.
On switching the function of auto print with interval, PRINT button becomes inoperative (no indication is printed when pressed).

9.15. Minimum sample weight

Weighing mode comprises <Minimum sample weight> function. In order to use this function it is necessary to enter minimum sample weight (MSW) value and tare values for which the MSW value is to be obligatory. For standard X7 series models the values equal zero.
Only authorized RADWAG employee or operator with Administrator permissions level, providing that balance factory settings enable this, can carry out procedure aiming to determine minimum sample weight and next enter the respective data.
If you want to use this function, and your balance menu contains no minimum sample weight data, ask the nearest RADWAG office for help.
Authorized RADWAG employee determines minimum sample weight for specified tare containers, using. The determination is carried out using mass standards on site, requirements of applied quality system are adhered to. Obtained value is entered into software, <Minimum sample weight>.
Balance software enables defining tare value with assigned minimum sample weight value.
<Minimum sample weight> function guarantees that results of weighing operation are comprised within set tolerance, accordant to applied quality management system of particular company.
Caution! *This function is valid for weighing mode exclusively.*

Options:

- **Mode**
  None – minimum sample weight function off
  Block – select to make the balance display respective pictograms informing on mass (whether it is out-of-tolerance low or out-of-tolerance high); with this option on, the software disables confirmation of the measurement that is out-of-tolerance low
  Warn – select to make the balance display respective pictograms informing on mass (whether it is out-of-tolerance low or out-of-tolerance high); with this option on, the software enables confirmation of the measurement that is out-of-tolerance low
- **Tare –** maximum tare value for which minimum sample weight value is obligatory (read examples below)
- **Minimum mass** – minimum sample weight determined for particular balance on site using respective method.

Example 1 for AS 220.X7 with d=0.0001 g:

No.	*Tare value*	*Minimum Sample Weight*	*Operation*
2	10.0000 g	1.0000 g	Minimum sample weight refers to all net weights subjected to weighing in a tare container of mass 0,0001g – 9,9999g inclusive (<TARE> button used). The program identifies setting specifying that minimum sample weight is valid exclusively for samples weighed in a tare container of weight covered by the above specified range. If taring function is not used or tare container weight is covered by range 10,0000g – Max, then pictogram informing on use of minimum sample weight goes blank.

Example 2 for AS 220.X7 with d=0.0001 g:

No.	*Tare value*	*Minimum Sample Weight*	*Operation*
1	220.0000 g	0.5000 g	Minimum sample weight refers to all net weights subjected to weighing in a tare container of mass covered by full weighing range (<TARE> button used). The program identifies setting specifying that minimum sample weight is valid exclusively for samples weighed in a tare container. If taring function is not

			used, then pictogram informing on use of minimum sample weight goes blank.

Example 3 for AS 220.X7 with d=0.0001 g:

No.	*Tare value*	*Minimum Sample Weight*	*Operation*
1	0.0000 g	0.2500 g	Minimum sample weight refers to all net weights subjected to weighing where no tare container is used (<TARE> button not used). The program identifies setting specifying that minimum sample weight is valid exclusively for samples not weighed in a tare container. If taring function is used, then pictogram informing on use of minimum sample weight goes blank.

As a user you can preview entered data, but you are not allowed to edit it.

Weighing with use of <MINIMUM SAMPLE WEIGHT> function

If in course of weighing you want to obtain information stating whether particular measurement is out-of-tolerance high, specified for minimum sample weight, then <Minimum sample weight> function shall be on, to turn the function on go to weighing mode settings.

Procedure (Administrator exclusively):

1. Weighing mode settings,
2. Press <Minimum sample weight> field,
3. Press <Mode> field,
4. Settings window is displayed with the following options:
   Block – select to make the balance display respective pictograms informing on mass (whether it is out-of-tolerance low or out-of-tolerance high); with this option on, the software disables confirmation of the measurement that is out-of-tolerance low,
   Warn – select to make the balance display respective pictograms informing on mass (whether it is out-of-tolerance low or out-of-tolerance high); with this option on, the software enables confirmation of the measurement that is out-of-tolerance low.
5. Select respective option and return to the home screen
6. Section presenting the weighing result comprises additional pictogram providing supplementary information. The pictogram changes in course of weighing operation informing you on the weighed sample mass with reference to declared minimum sample weight value

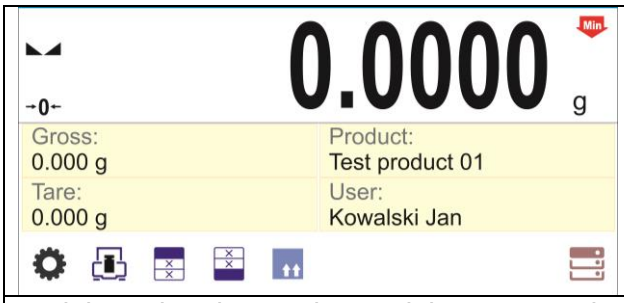	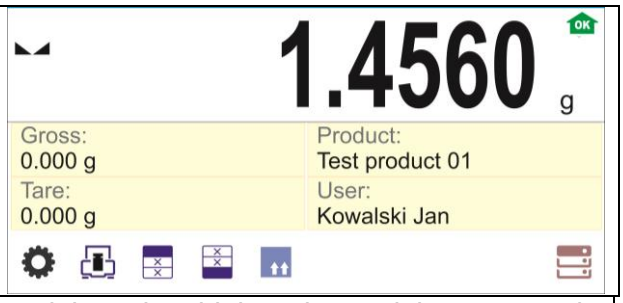
Weight value lower than minimum sample weight specified for a particular tare range.	Weight value higher than minimum sample weight specified for a particular tare range.

Pictograms for minimum sample weight:

Min	Weight value lower than specified minimum sample weight
OK	Weight value higher than or equal to specified minimum sample weight

CAUTION!

If more than one reference tare value has been programmed (along with min load values assigned to them) then indicated value automaticaly turns to range respective for tare container weight. Requested minimum load changes simultaneously.

9.16. Cooperation with Titrators

In order to provide correct cooperation with Titrators, go to settings of standard printout content and set <Mass value for a titrator> parameter to <Yes> value. With this, other variables for the printout are turned off.

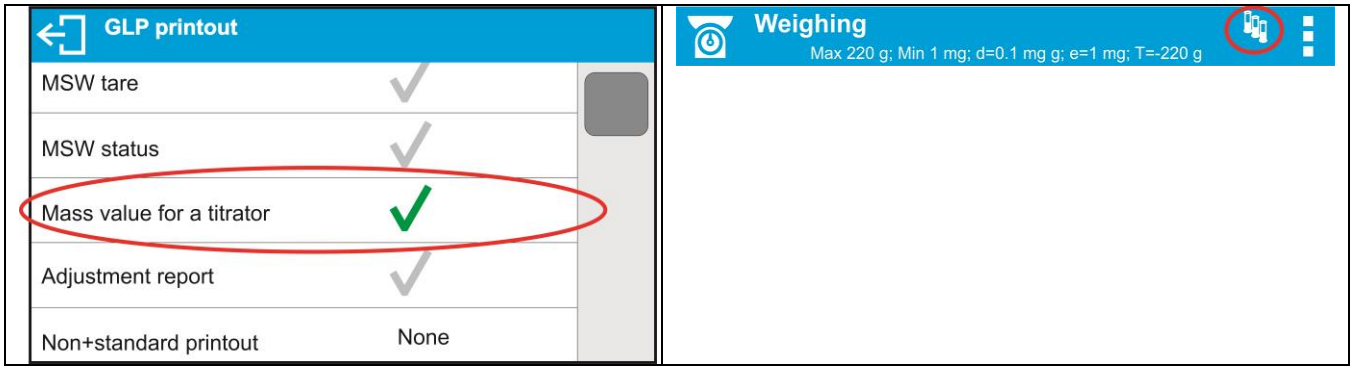

With <Yes> value on, a respective pictogram is displayed in the top bar of a home screen. The pictogram informs on special format of mass printout, tolerable by TITRATORS.

9.17. Dual Range Balances and Weighing

(refers PS 200/2000.X7 and WLC 1/10.X2 balances)

An example for PS 200/2000.X7 balance

PS 200/2000.X7 balance is a dual range weighing device with readability for **I weighing range** d_1 = 0.001g, and d_2 = 0.01g for **II weighing range**.

Transition from weighing with accuracy of the **I weighing range** to weighing with accuracy of the **II weighing range** takes place automatically on exceeding Max1 200g. On entering the accuracy of the II weighing range, the display indicates **II** pictogram on its right side, last but one digit turns to grey colour.

From now on the balance continues weighing in the II weighing range.

To return to weighing with accuracy of the **I weighing range**:

- take the load off the weighing pan

- as the indication returns to zero and when symbols **→0←** and ◣◢ are displayed, press →0← button

The balance returns to weighing with readability d_1=0.001g, the **II weighing range** symbol gets blanked, last but one digit is no longer grey.

9.18. Weighing loads suspended under the balance

Standard balances can weigh loads under the balance. Such a working mode requires positioning the balance above certain level. To do so, you can use a frame that comes as an additional equipment.

If you use this function, you need to do as follows:

1. remove the plastic plug located in the base of the balance,
2. the suspension will be visible through the hole – it is factory-installed as a permanent unit,
3. install a relevant hook in the suspension hole (the hook is not a standard equipment) for suspending loads as well as a connector and weighing pan for placing loads.
4. put the load on the weighing pan and weigh it,
5. once the weighing procedure that involves suspension is completed, disassemble all previously mounted pieces and put the plastic plug back on.

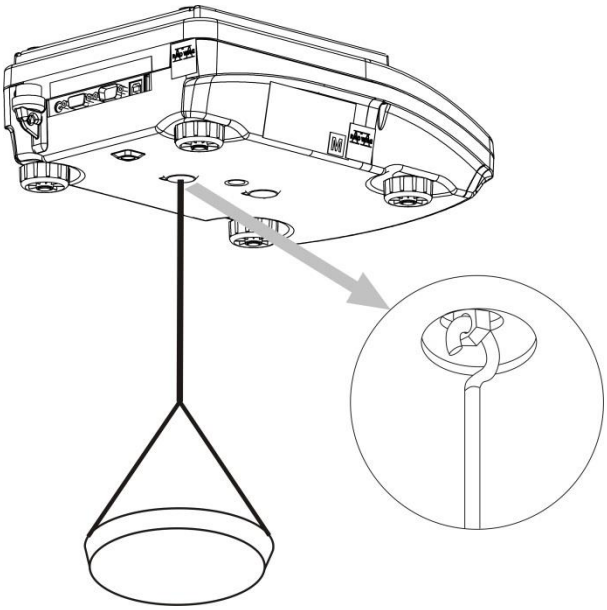

Note:
It is forbidden to rotate, turn or bend the suspension. Otherwise the balance mechanism may get damaged.
Press →0← or →T← to zero masses of all suspended elements, e.g. hook, weighing pan, connector, etc.

10. MISCELLANEOUS PARAMETERS

A user can set up parameters which influence balance operation. These parameters are to be found in parameters group **MISC**.
Settings modification for particular parameters of this parameter group proceeds likewise as described in point 7.

Menu language
Language parameter enables selecting the language of the balance menu descriptions.
Available languages: POLISH, ENGLISH, RUSSIAN, SPANISH, FRENCH, GERMAN, ITALIAN, CZECH, CHINESE, ARABIC, TURKISH, KOREAN.

Permissions
Permissions parameter enables choosing access level for a particular user, one that is not logged in.
Available access levels: ADMINISTRATOR / ADVANCED USER / USER / GUEST
Depending on selected permissions level, you can enter balance parameters and modify the settings, as far as possible for a particular level. Logging in operation is not required (for permissions overview read point 8.2).

Extension Module
Extension module allows to:
- activate compliance with FDA 21 CFR procedures,
- run communication protocol extension, and
- enable standard licence (demo version).

In order to run the mode, a license number is required for particular option release. To get the licence number, contact the device manufacturer and provide the value of <LICENCE> parameter, 2-digit number on the basis of which, in the headquarters of the manufacturer, a respective password, enabling to run a particular extension module, is generated.

Procedure:
Enter < Misc.> submenu, select <Extension modules> parameter and follow the prompts.

„Beep" sound – reaction to operation of pressing a key
Sound parameter enables switching on/off a 'beep' sound responsible for informing a user about pressing any key of balance overlay or display, or about proximity sensors response.

Procedure:

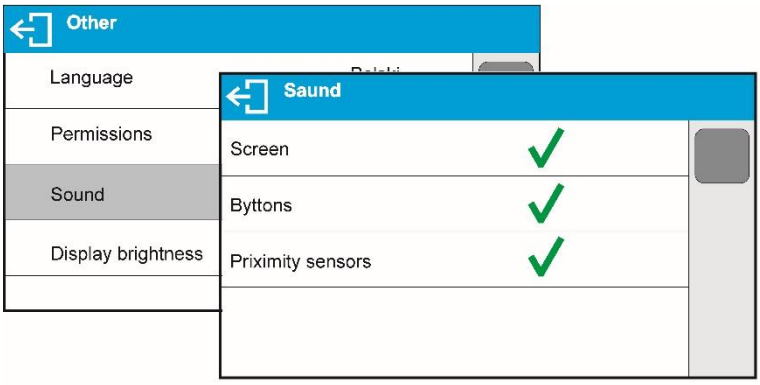

Date and time
The group of parameters responsible for setting date and time of the balance internal clock.

Date format
Date form. Parameter enables altering the date format on the printout [YYYY.MM.DD; YYYY.DD.MM; DD.MM.YYYY; MM.DD.YYYY; YYYY/MM/DD; YYYY/DD/MM; DD/MM/YYYY; MM/DD/YYYY; YYYY-MM-DD; YYYY-DD-MM; DD-MM-YYYY; MM-DD-YYYY; YYMMDD; YYDDMM; DDMMYY; MMDDYY; D.M.YY; D/M/YY; D.M.YYYY; DD.MM.YY; DD/MM/YY; DD-MM-YY; DD-MMM-YY; DD.MMM.YYYY; DD.MMM.YYYY; M/D/YY; M/D/YYYY; MM/DD/YY; YY-M-DD; YY/MM/DD; YY-MM-YY; YYYY-M-DD];, where: YYYY – year; MM – month; DD – day.

Time format
This parameter allows you to select the time format in the printout [12h/24h].
If you set [**12h**] in the **TIME** parameter**,** the time displayed will be accompanied by the <A> or <P> letter. **A** represents time before 12 (midday), while **P** is for time after 12 (midday). **AM** or **PM** will be included in the time printout.

Date
Date parameter enables setting the current date.

Procedure:

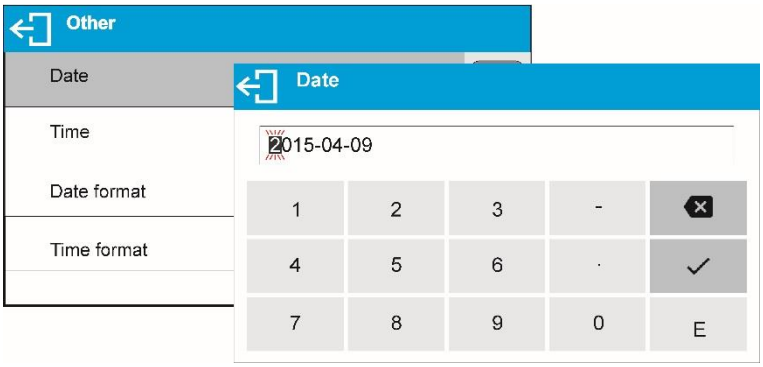

Time
Time parameter enables setting the current time. Procedures for change of time settings and date settings are likewise.

Internet time
This parameter allows you to activate the Internet clock synchronisation, using the connection to the network via ETHERNET or WiFi, and connecting to the specific NTP server. Once this option has been enabled, the program automatically corrects the date and time as per the NTP server every hour.

Synchronisation *(the parameter is invisible if <Internet time> is disabled)*
Forcing the manual time synchronisation as per the specific NTP server.

Time zone (the parameter is invisible if <Internet time> is disabled)
Setting the time zone for the balance working area.
For Poland, set UTC+1.

NTP server address *(the parameter is invisible in <Internet time> is disabled)*
Setting the NTP server address for the balance working area.
For Poland, set *80.50.231.226.*

RTC calibration
This parameter allows you to carry out the balance internal clock calibration. This option is available only to the operator logged as an administrator and only if the <Internet time> parameter is disabled.

Every balance is assigned the internal clock coefficient in the factory. When the operator can detect a serious mistake in the time displayed, he can carry out the clock calibration procedure on his own.

Procedure

1. **Set the correct date and time in the balance as per the template, e.g. Internet time.**
2. Run Setup/Miscellaneous/Date and time/RTC calibration

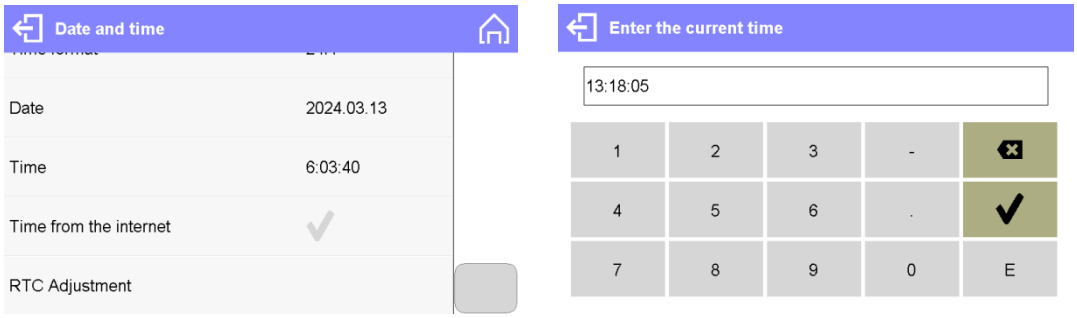

3. **Enter the current time as per template (the same as before).**
4. Wait for at least 12 hours, more than 24 hours at best
5. Run Setup/Miscellaneous/ Date and time/RTC calibration – activated: 2024.02.28,

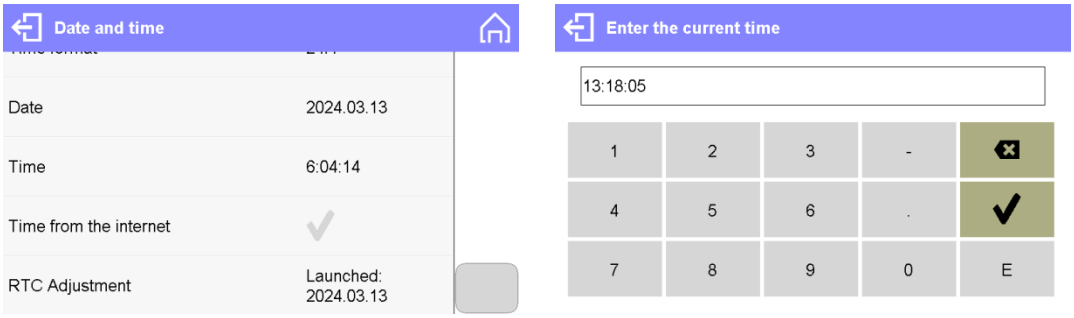

6. **Enter the current time as per template (the same as before).**
7. The RTC calibration summary box will be displayed.

8. The RTC calibration procedure has been successfully completed. Press key to close the window and return to the home screen. The program will enter corrections for the real time clock automatically.

Backlight and adjusting display brightness
Display brightness parameter enables setting the brightness of the backlight or switching off the display brightness completely.

Procedure:

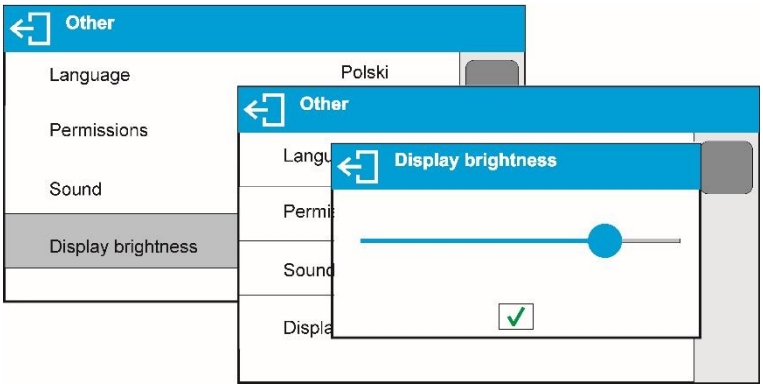

Proximity sensors sensitivity adjustment
Proximity sensors sensitivity parameter specifies distance within which the sensors can be operated, its scale is expressed in percent and it ranges from 0% to 100%. For lower percent value the proximity sensors operate at a shorter distance.
Usually the sensitivity value is comprised within 50%-70% limits.

Procedure:

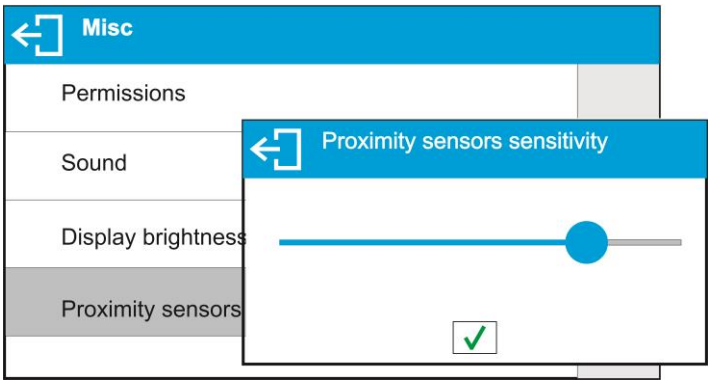

Backlight turn-off time
<BACKLIGHT OFF> parameter enables activation of display stand-by mode, the stand-by mode is activated when no weighing process is carried out (stable indication is a necessary condition for activation of the stand-by mode).
NONE – backlit turn-off time not activated.
0.5; 1; 2; 3; 5 – time given in minutes.
If the software registers stable indication for a specified time interval, set in parameter <BACKLIGHT OFF>, than the display goes out immediately. The backlight activates upon change of indication (no stability pictogram on the display) or pressing any key on the balance keypad. The display remains blank also when balance menu is entered.

Auto switch-off
<AUTO OFF> parameter enables automatic display deactivation (the parameter functioning is likewise to ⏻ button functioning). Upon display deactivation the other subassemblies are powered and the balance turns to stand-by mode.
NONE – auto switch-off not activated.
0.5; 1; 2; 3; 5 – time given in minutes.

If the software registers stable indication for a specified time interval, set in parameter <AUTO OFF>, than the display is turned-off immediately.

To start-up the balance, it is necessary to press ⏻ button located on the balance keypad. The balance automatically returns to weighing operation.
Balance cannot be turned off if any process is started or if balance menu is entered.

How to restore operator's default settings
This parameter allows you to quickly restore default settings in the operator's menu.

Digit separator
This parameter allows you to to select the decimal separator in the mass printout.

Procedure:

- Enter <Miscellaneous> submenu.
- Select <Digit separator> to see the edition box.
- Select either of the following:
    - Dot (.)
    - Comma (,)

Select the value to return to the submenu box.

Autotest GLP

AUTOTEST GLP function is designed to aid a user in assessing balance's operation and diagnosing the reasons for occurrence of errors in weighing which exceed the maximum permissible values for a given balance model.
By means of a simple, repeatable and fully documented way, the function enables optimizing balance's settings to maintain the best possible repeatability and weighing time at workstation. The main purpose of the function is the possibility of monitoring the above-mentioned parameters at optional moment and saving records from the carried out tests in the form of printed reports of the tests that are automatically generated at the end of examination. Up to 50 reports can be recorded.
The test controls repeatability of placing the interval weight and determining error of indication with reference to balance's maximum capacity.

Testing procedure:

- deposit internal weight twice,
- deposit internal weight ten times, calculate the value of standard deviation,
- perform balance adjustment,
- print a report.

Test results provide balance data, calculated error for Max capacity and value of repeatability of indication expressed as standard deviation.

An exemplary report:

….....
--------- Autotest GLP: Report ---------
Balance type PS 3000.X7
Balance ID 400010
User Admin
Software rev. v.0.4.9
Date 2013.07.16
Time 09:17:16

Number of measurements 10
Reading unit 0.001/0.01 g
Internal weight mass 1402.094 g
Filter Average
Value release Fast &Reliable

Deviation for Max. *-0.118 g*
Repeatability *0.0088 g*
Signature

….....

Procedure:

Enter <OTHER> parameters' group, start <AUTOTEST GLP> parameter.

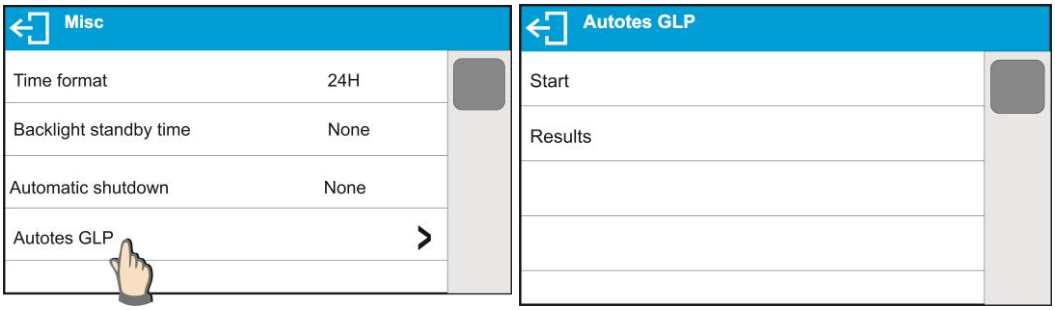

Press <Start> field. Autotest GLP procedure starts, it is carried out automatically. Autotest procedure progress bar is displayed.

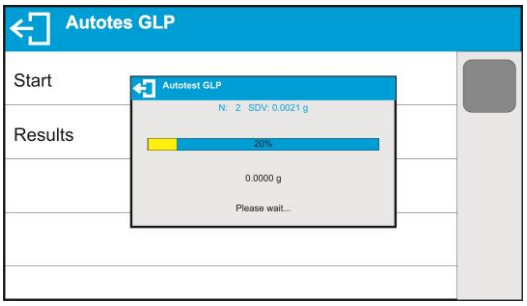

Press ⇦ or ⌂ button to abort the procedure, you can do it at any time.
On completed procedure the parameter screen is displayed, value informing on recorded autotest number, to be found in <RESULT> field, is increased by <1>. To view particular results press <RESULTS> field and select the given autotest.

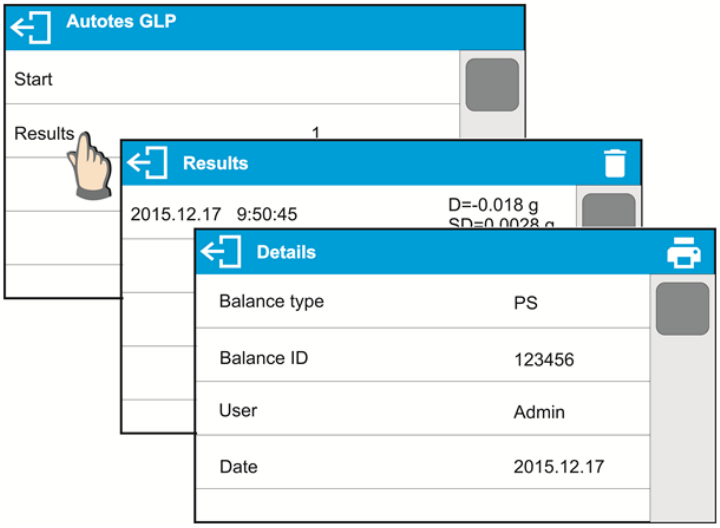

To print a report go to <Details> window and press printer pictogram. The software can store up to 50 reports.

11. ADJUSTMENT

In order to ensure the highest weighing accuracy, it is recommended to periodically introduce a corrective factor of indications to balance memory, the said factor must be referred to a mass standard. In other words, balance adjustment shall be performed from time to time.

Adjustment should be carried out:

- Before the beginning of weighing procedure,
- If long breaks between following measuring series occur,
- If temperature inside the balance changes more than: 1°C or 2°C for AS series balances or 2°C for PS series balances.

Types of adjustment:

- Internal automatic adjustment
- Manual internal adjustment
- Adjustment with an external weight of declared mass which cannot be modified or of any mass, but not lower than 30% of maximum range.

CAUTION!
In case of verified balances (with an internal automatic adjustment system) only automatic internal adjustment and manual internal adjustment are available. Remember to carry out the adjustment process when there is no load on the pan! When the weighing pan is loaded, command ***<RANGE EXCEEDED>*** *is displayed. In such a case remove the load and restart the the adjustment process. Adjustment process can be aborted if necessary by pressing button at any time during the process.*

11.1. Internal adjustment

Internal adjustment is carried out by means of an internal adjustment weight button, when pressed, automatically triggers adjustment process. Upon adjustment process completion respective message, informing about process end and about its status, is displayed.

CAUTION!
Adjustment procedure requires stable environmental conditions (no air drafts or ground vibrations). The process must be carried out with an empty weighing pan.

11.2. External adjustment

External adjustment is carried out by means of an external mass standard of specified accuracy class and weight. Both, accuracy class and mass standard weight depend on balance type and max capacity. The process takes semi-automatic form, successive stages are signalled with prompts.

CAUTION!
External adjustment is possible for balances that are not a subject to conformity assessment (verification).

Process stages:

- Enter <Adjustment> submenu, next select “External adjustment” option,
- “Remove weight” prompt is displayed.
- Take the weight off the weighing pan and press ✓ button. Whereas balance determines start mass, “Adjustment; Please wait…” prompt is displayed,
- Upon completed start mass determination procedure “Put weight …” prompt is displayed along with particular mass standard value.
- Put the required weigh on a pan and press ✓ button,
- Upon completed procedure “Remove weight” prompt is displayed.
- Take the weight off the weighing pan, wait for <Adjustment> window to be displayed again.

11.3. User adjustment

User adjustment is carried out with an optional standard of mass ranging between 0,3 Max and Max. User adjustment and external adjustment procedures are likewise with one exception, before user adjustment start, a message box for entering mass of a standard used for user adjustment is opened.

CAUTION!
User adjustment is possible for balances that are not a subject to conformity assessment (verification).

In order to start user adjustment, enter <Adjustment> submenu and select ‘User adjustment’ option. Then follow the commands displayed on a screen.

11.4. Adjustment test

<Adjustment test> function enables comparing the result of an internal automatic adjustment with the value recorded in balance factory parameters. The comparison is used for determining balance sensitivity drift over time.

11.5. Automatic adjustment

This menu is for declaring a value initiating an automatic adjustment. Accessible options:

- None – automatic adjustment disabled,
- Time – adjustment takes place in time intervals declared in menu <Automatic adjustment time> (10.6),
- Temperature – adjustment is triggered by temperature change only,
- Both – adjustment is triggered by both, temperature changes and time.

CAUTION!
Parameter settings can be modified only for balances that are not a subject to conformity assessment (verification).

11.6. Automatic adjustment time

<Automatic adjustment time> parameter determines time interval between successive internal adjustments carried out automatically. The time interval is declared in hours and ranges between 0.5 and 12 hours.
To set time interval for automatic adjustment:

- select <Automatic adjustment time> option,
- using displayed menu, select appropriate time interval (given in hours) which is a time gap elapsing from the last carried out internal automatic adjustment until activation of the following automatic internal adjustment.

CAUTION!
Parameter settings can be modified only for balances that are not a subject to conformity assessment (verification).

11.7. Report printout

Adjustment report is generated automatically at the end of each adjustment process or adjustment test and next it is sent to communication port assigned for PERIPHERAL DEVICES/PRINTER (by default it is COM1). Report content is declared in PRINTOUTS/ADJUSTMENT REPORT menu. Instruction on how to declare settings for this option is to be found further down this manual, read sections referring to printouts.

The report can be printed using balance-connected printer or sent to a computer and saved for archiving purposes as a file.

12. DETERMINING PRINTOUT CONTENT

12.1. Adjustment report

ADJUSTMENT REPORT is a group of parameters enabling to declare data that is to be printed on an adjustment printout.

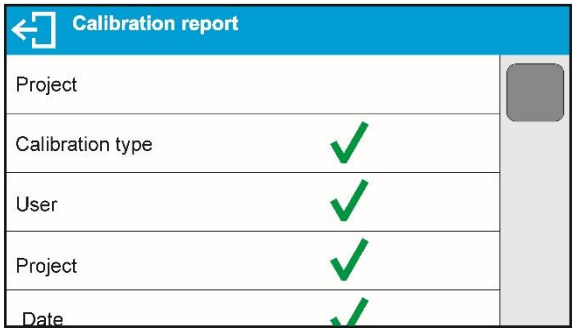

Variable	Overview
PROJECT	Option enables naming the project (name associated with a particular type of weighing). The name may consist of maximum 31 characters.
CALIB TYPE	Option enables printing out the type of the adjustment being carried out.
USER	Option enables printing out the name of a logged-in user.
PROJECT	Option enables printing out the name of the project (see parameter Project).
DATE	Option enables printing out the date of the carried out adjustment.
TIME	Option enables printing out the time of the carried out adjustment.
BALANCE ID	Option enables printing out the balance ID number.
CAL. DIFFER	Option enables printing out the difference between mass of an adjustment weight measured during the last adjustment and the current measured mass of this weight.
DASHES	Option enables printing out dashes that separate the date of a printout from a signature.
SIGNATURE	Option enables providing an area for the signature of a user performing the adjustment.

- Procedure for naming the project

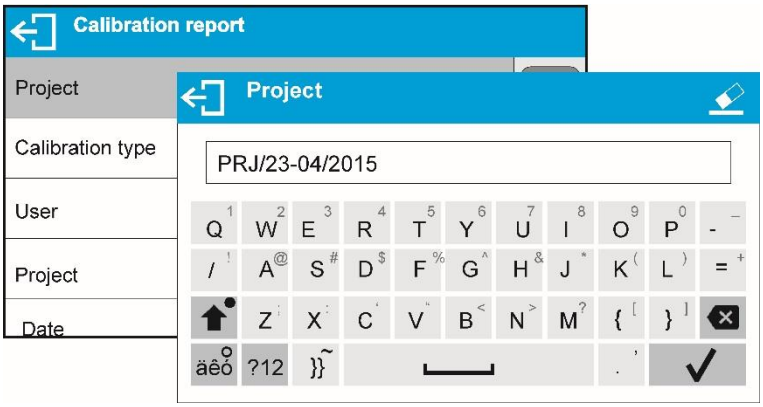

For the parameters described above, one of these values must be selected:

NO – do not print
YES – print

An exemplary report:

```
--------------Cal.  Report---------------
Calib. type                    Internal
User                             Admin
Project                Project name-1
Date                        04.06.2013
Time                      10:54:27 AM
Balance ID                     353870
Cal. differ.                   0.045 g
-----------------------------------------
Signature:

.........................................
```

12.2. Header, footer, glp printouts

HEADER group of parameters enabling to declare data that is to be printed on a header printout.

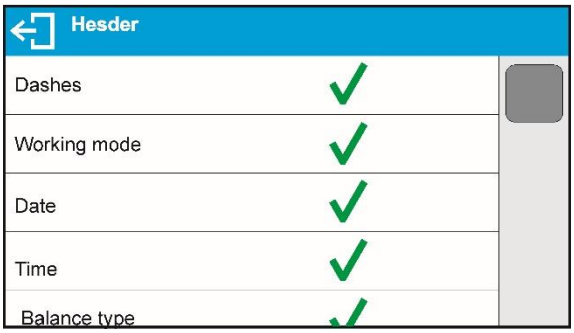

GLP PRINTOUT group of parameters enabling to declare data that is to be printed on a measurement result printout

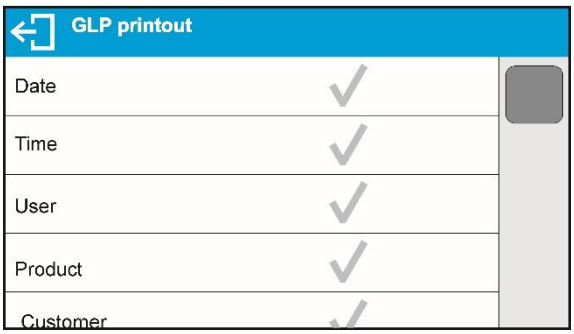

FOOTER group of parameters enabling to declare data that is to be printed on a footer printout

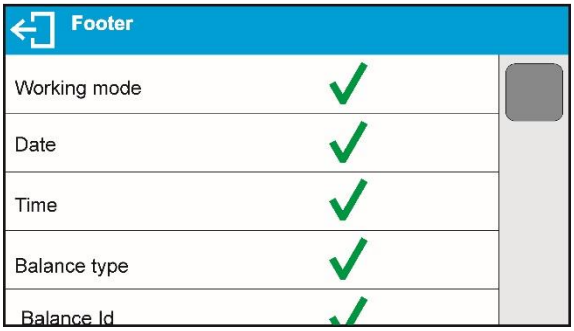

Printout variables list

Variable	Overview	Active for
WORKING MODE	Option enables printing out the name of a working mode.	Header Footer
BALANCE TYPE	Option enables printing out the balance type.	Header Footer
BALANCE ID	Option enables printing out the balance ID number.	Header Footer
USER	Option enables printing out the name of a logged-in user.	Header GLP printout Footer
PRODUCT	Option enables printing out the name of a currently selected product.	Header GLP printout Footer
CUSTOMER	Option enables printing out the name of a currently selected Customer.	Header GLP printout Footer
PACKAGING	Option enables printing out the name of a currently selected packaging.	GLP printout
DATE	Option enables printing out the date of the carried out adjustment.	Header GLP printout Footer
TIME	Option enables printing out the time of the carried out adjustment.	Header GLP printout Footer
VARIABLE 1	Option enables printing out the value of VARIABLE 1.	Header GLP printout Footer
VARIABLE 2	Option enables printing out the value of VARIABLE 2.	Header GLP printout Footer

VARIABLE 3	Option enables printing out the value of VARIABLE 3.	Header GLP printout Footer
NET	Option enables printing out net weight value in a basic unit (calibration unit).	GLP printout
TARE	Option enables printing out the tare value in the current unit.	GLP printout
GROSS	Option enables printing out the gross mass value in the current unit.	GLP printout
CURR.RES	Option enables printing out the current measurement result (NET weight) in a current unit.	GLP printout
CAL.REPORT	Option enables printing out a report from the last adjustment, according to the settings declared for the adjustment report printout (see sec. 11.1 of this user manual).	Header GLP printout Footer
DASHES	Option enables printing out separating dashes.	Header Footer
EMPTY LINE	Option enables printing out an empty separating line.	Header Footer
SIGNATURE	Option enables providing an area for the signature of a user performing the adjustment.	Footer
PROFILE	Option enables printing out the name of currently selected Profile.	Header GLP Printout Footer
NSTD. PRNT.	Option enables printing out one of 100 non-standard printouts on the footer printout. You can choose one of the following options: NONE / non-standard printout name. The way of entering non-standard printouts is described further down this user manual.	Header GLP printout Footer

For the parameters described above, one of these values must be selected:

NO - do not print
YES - print

Exemplary reports:

Header

```
----------------------------------------
Working modes                   Weighing
Date                          24.07.2013
Time                             7:37:30
ScaleType                             AS
Balance ID                      10353870
User                          ADMIN ENG
Product                           Tablet
```

GLP printout

```
Date                          04.06.2013
Time                        11:11:24 AM
Product                           NAZWA
    0.000 g
```

Footer

```
----------------------------------------
Date                          24.07.2013
Time                             7:41:10
User                          ADMIN ENG

Signature

.........................................
```

12.3. Non-standard Printouts

The balance software enables entering 100 non-standard printouts. Each of them can consist of approximately 1900 characters.

Non-standard printout may include:

- variables dependent on the working mode and other needs (mass, date etc.)
- permanent text from the user menu.

Non-standard printout can have approximately 1900 characters.

12.3.1. Inserting texts

Variables list:

Symbol	Description
{0} [1)]	Standard printout in a calibration unit
{1} [1)]	Standard printout in a current unit
{2}	Date
{3}	Time
{4}	Date and time
{5}	Working mode
{6}	Net weight in a current unit
{7}	Net weight in a calibration unit
{8}	Gross weight in a calibration unit
{9}	Tare in a calibration unit
{10}	Current unit
{11}	Calibration unit
{12}	Min threshold
{13}	Max threshold
{15}	Statistics: Number
{16}	Statistics: Sum
{17}	Statistics: Mean
{18}	Statistics: Minimum
{19}	Statistics: Maximum
{20}	Statistics: SDVP
{21}	Statistics: D
{22}	Statistics: RDVP
{23}	Statistics: SDVS
{24}	Statistics: RDVS
{32}	Factory no.
{35}	Parts counting: Mass standard weight
{36}	Percent weighing: Reference mass

{45}	Target value
{46}	Tolerance
{49}	Parts counting: Reference sample quantity
{50}	Product: Name
{51}	Product: Code
{52}	Product: EAN code
{53}	Product: Mass
{54}	Product: Tare
{56}	Product: Minimum
{57}	Product: Maximum
{66}	Product: Tolerance
{70}	Variable 1
{71}	Variable 2
{72}	Variable 3
{75}	User: Name
{76}	User: Code
{77}	User: Access level
{80}	Packaging: Name
{81}	Packaging: Code
{82}	Packaging: Mass
{85}	Customer: Name
{86}	Customer: Code
{87}	Customer: VAT no.
{88}	Customer: Address
{89}	Customer: Postal code
{90}	Customer: City
{146}	Gross weight in current unit
{147}	Tare weight in current unit
{150}	Paper crop for EPSON printers
{151}	Form feed for PCL printers
{155}	Cooperation with RADWAG CONECT PC software

{275}	Ambient conditions readout date and time
{276}	THB: Temperature
{277}	THB: Humidity
{278}	Internal sensor: Temperature 1
{280}	THB: Pressure
{281}	Air density
{284}	THB: Temperature from an additional sensor
{58} 2)	Product:PGC mode
{100} 2)	PGC Report: Batch number
{101} 2)	PGC Report: Start date
{102} 2)	PGC Report: End date
{103} 2)	PGC Report: Result
{104} 2)	PGC Report: Batch quantity
{105} 2)	PGC Report: Measurement quantity
{106} 2)	PGC Report: T1 error value
{107} 2)	PGC Report: 2T1 error value
{108} 2)	PGC Report: T1 error quantity
{109} 2)	PGC Report: Permissible T1 error quantity
{110} 2)	PGC Report: 2T1 error quantity
{111} 2)	PGC Report: Sum
{112} 2)	PGC Report: Min
{113} 2)	PGC Report: Max
{114} 2)	PGC Report: Average
{115} 2)	PGC Report: Average limit
{116} 2)	PGC Report: Standard deviation
{117} 2)	PGC Report: Measurements
{118} 2)	PGC Report: Unit
{119} 2)	PGC Report: Report no.
{120} 2)	Average tare report: Date
{121} 2)	Average Tare Report: Result
{122} 2)	Average Tare Report: Standard deviation
{123} 2)	Average Tare Report: 0.25T1
{124} 2)	Average Tare Report: Measurement quantity
{125} 2)	Average Tare Report: Measurements
{126} 2)	Average Tare Report: Report no.

CAUTION!

1) *{0} and {1} variables format terminates with CR LF charcters, with this the newline occurs by default.*
2) *Variables are not operated by **Standard** software version.*

Every single printout can contain max 1900 characters (letters, numerals, non-standard characters, spaces). A user can apply non-standard characters depending on type of data that is to be printed out.

An example:

“RADWAG”
DATE: <current measurement date>
TIME: <current measurement time>
PRODUCT MASS: <current mass indication>

*****SIGNATURE:.....

<current working mode>

Enter printout content settings and design the printout using respective data variables and characters for text format.

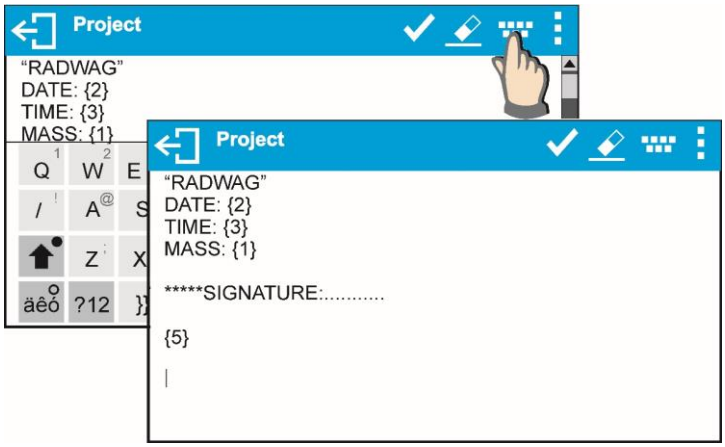

If you want to carry out HEADER or GLP or FOOTER printout using EPSON printer (equipped with autocutter blade) and crop the paper beneath the respective printout, then you have to select an option of non-standard printout comprising {151} variable, and set this option in header, GLP printout or footer settings, respectively.
Means for entering control codes is described in point 21 of this user manual.
In such case <SUFFIX> command should stay empty. Paper must be cropped underneath the FOOTER.

Exemplary settings:

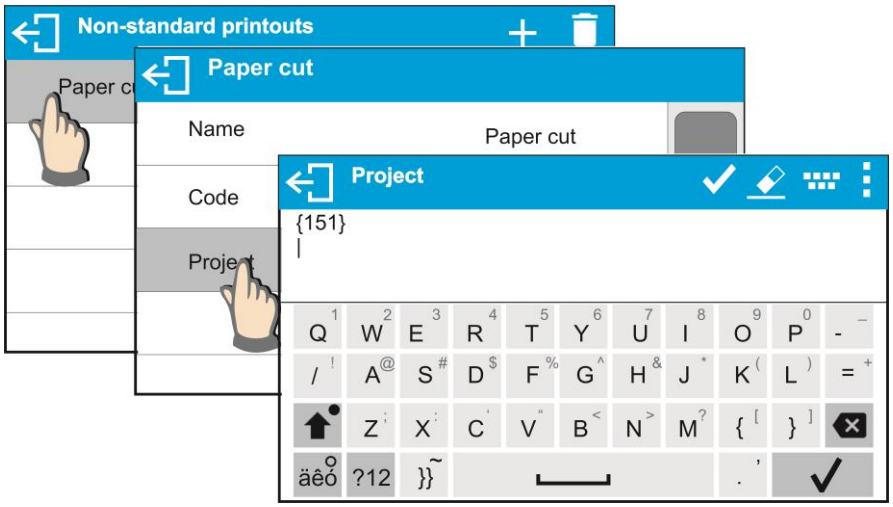

Means for inserting texts
- by an on-screen keyboard
- by a computer keyboard of USB type

A computer keyboard of USB type can be connected to a balance, this enables easier and quicker editing of the printouts.
Willing to insert any text, it is necessary to select a respective menu option and, using the keyboard, type the text.

12.4. Variables

Variable is defined as alphanumeric data which can be linked to printouts, products or other information related to weighing. Every variable is characterized by its content, the content must be given. Variables are used for entering various data during the weighing process, e.g. serial number or batch number. The program allows to enter 3 variables. Each can consist of max 31 characters.
In order to insert a variable content, you need to enter variable settings (VARIABLE 1, VARIABLE 2, VARIABLE 3) and enter the respective values using direction keys (arrows) on the balance keypad or a computer keyboard. Procedure for entering texts is the same as for non-standard printouts.

13. WORKING MODES – GENERAL INFORMATION

Standard version of X7 series balances features the following working modes:

	Weighing Means of operation: weight of a load is determined through an indirect measurement. A balance measures gravitational force which attracts the load. An obtained result is processed to a digital format and displayed in a form of measurement result.
	Parts Counting Means of operation: based on a determined mass of a single part it is possible to count another parts, assuming that mass of a single part is determined with sufficient accuracy, and that the following parts are equal in mass.
	Checkweighing Means of operation: control of sample mass with applied thresholds. A user should specify the value of min threshold <LO> and max threshold <HI>.
	Dosing Means of operation: a user should specify sample's target mass to be obtained by pouring.
	Percent Weighing Means of operation: control of percent ratio of a sample in relation to a standard (reference). Obtained data provides percent ratio on how test sample differs from the accepted standard (reference).
	Density of solids Means of operation: based on Archimedes principle, a balance determines density of solids. The mode requires an optional density determination kit.

	Density of liquids Means of operation: based on Archimedes principle, a balance determines density of liquids. The mode requires an optional density determination kit.
	Animal Weighing Means of operation: mass measurement takes place with application of filters dampening animal moves on a weighing pan, thus enabling obtaining a correct measurement result.
	Statistics Means of operation: carried out measurements are used to calculate statistical data, such as Min, Max, deviation, etc.
	Peak Hold Means of operation: max temporary indication occurring in course of the weighing process is hold on a display.
	Formulations Means of operation: by mixing specified ingredients you can obtain particular mixture, in order to program given formulation you have to specify weight of particular ingredients.
	SQC is a mode useful in the course of packing process. It aims at monitoring and/or controlling product packing. It enables detecting product deficiency and excess.
	Control of packaged goods in accordance with regulation on Packaged goods (function disabled for standard balance models).

Particular working modes settings feature specific functions. The functions enable adapting mode operation to your individual needs. The special settings are activated on selecting a respective profile. A detailed description of specific functions is provided within description of working modes.

13.1. Working modes accessibility

Group of parameters enabling you to declare which functions are to be accessible. You can deactivate functions that are not used in course of balance operation, to do it, value **<NO>** has to be selected for a particular parameter.

Procedure:

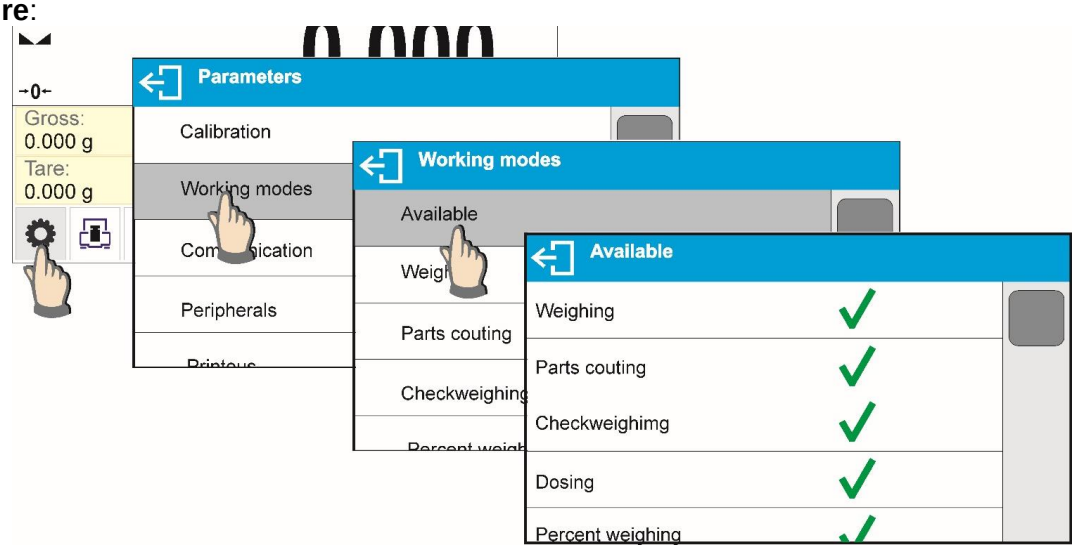

13.2. Running working mode

To run working mode other than currently operated one:

- press pictogram of currently used working mode, the pictogram is located in the top left hand corner,

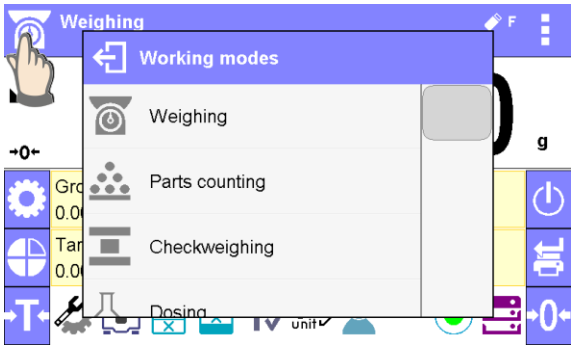

- wait for the available working modes list to be displayed,
- select the working mode you need to operate.

13.3. Parameters Related to a Working Mode

Each working mode has programmable parameters determining its functioning. Read point 8 of this user manual for description of possible settings for WEIGHING working mode. Settings for other working modes are specified within particular working mode description.

14. PARTS COUNTING

<Parts counting> is a working mode enabling determination of quantity of small parts with equal weight. Determined mass of a single part is used for the counting procedure. The single part mass may be:

- determined from a reference quantity of parts subjected to weighing,
- acquired from database of products,
- entered manually as a numeric value.

Procedure for activation of Parts Counting mode

Select <Parts counting> mode, home screen featuring parts counting pictogram in a top bar is automatically displayed.

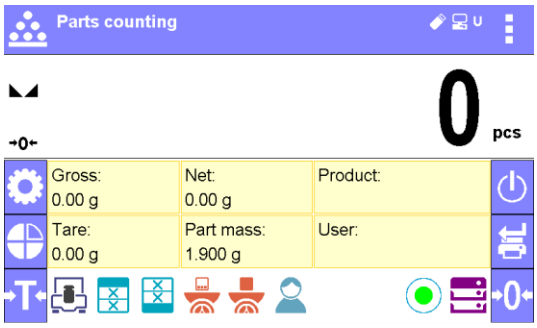

Info field provides the following information:

- Gross weight,
- Tare weight,
- Net weight,
- Part mass,
- Product,
- User,
- Keys: parameters, adjustment, print header, print footer, set part mass, determine part mass (from a reference quantity of parts), determine mass using 10 parts, product, user, databases.

14.1. Supplementary Settings for Parts Counting Mode

The supplementary settings enable adjusting the working mode to your needs and requirements. To access the settings follow the below procedure.

Procedure:

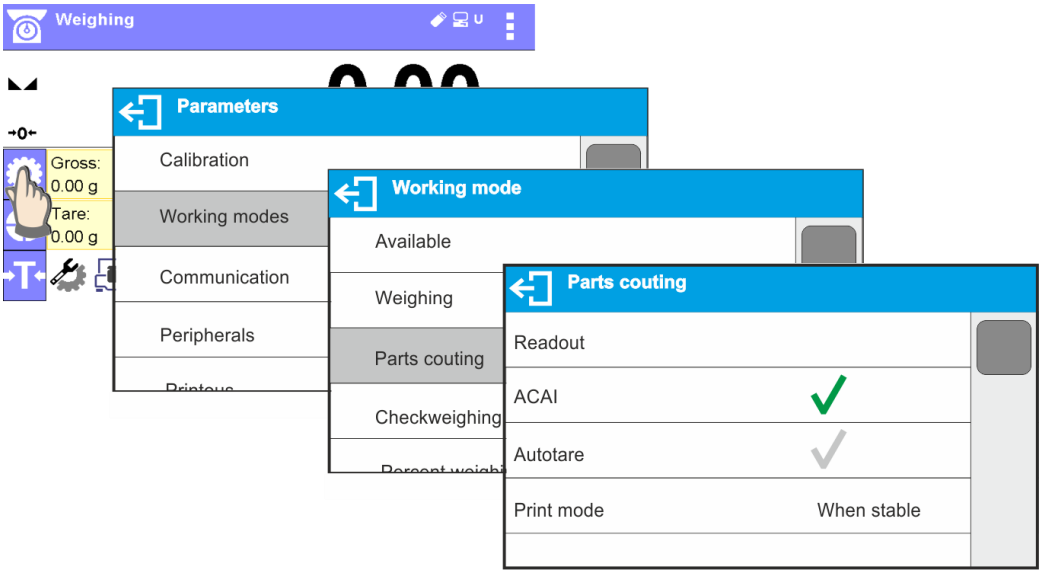

ACAI, Automatic Accuracy Correction, provides the following options:

- YES, single part mass is updated,
- NO, single part mass is not updated.

Upon ACAI function activation, pictogram is displayed in the top bar during determination of a single part mass.

Means of operation of ACAI function:

1. Number of pieces (on adding) on balance weighing pan has to be greater than before.
2. Number of pieces (on adding) on balance weighing pan must be less than twice the amount displayed before adding the pieces.
3. Current quantity of parts must be within ± 0,3 tolerance of the total value.
4. Measurement result has to be stabilised.

For means of other functions operation read section 9.11 „WEIGHING mode settings".

14.2. Parts counting – quick access keys

Each working mode features automatically displayed set of default keys. The set can be modified by assigning out-of-list quick access keys to on-screen keys. Such operation requires particular permissions level.
Read section 7.6.1 for list of quick access keys.

14.3. Setting Reference Mass by Entering Determined Part Mass

Procedure:

- Press <Set part mass> key or the label Part mass: 0.000g, <Part mass> editing window featuring an on-screen keyboard is displayed,

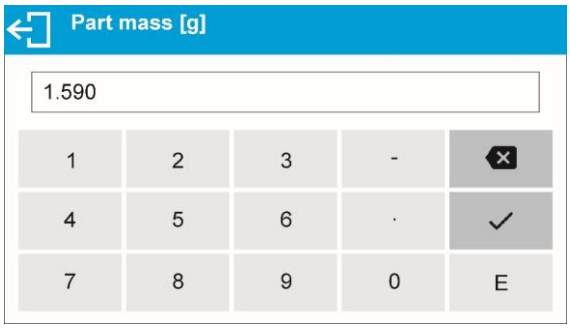

- Enter the requested value and confirm by pressing key, <Parts counting> mode is run with automatically specified part mass.

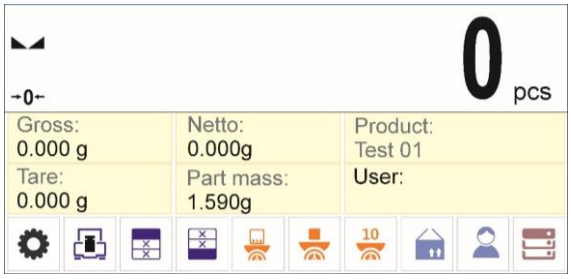

CAUTION!
If you enter weight of value that is lower than 0.1 reading unit, then ***<Value too low>*** *message is displayed.*

14.4. Setting Reference Mass by Determining Part Mass

Procedure:

- Put a container on a weighing pan, tare its mass,
- Press <Determine part mass> button, <Reference quantity> editing window featuring an on-screen keyboard is displayed,
- Enter the requested value and confirm by pressing key,

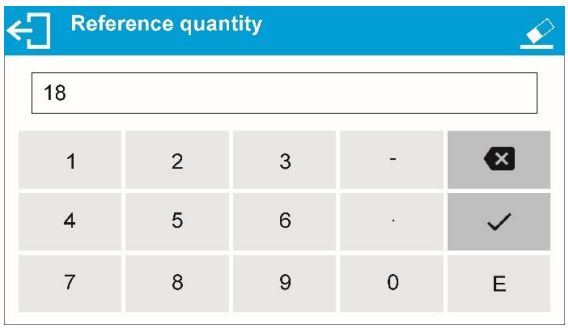

- Message on number of parts to be loaded is displayed: **<Number of parts to be loaded: 18>**,

- Put specified number of pieces on the weighing pan, when the result is stable (stability pictogram displayed) press key to confirm,

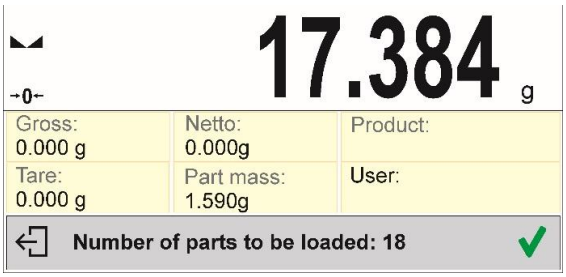

- The software automatically recalculates single part mass, next it moves to <Parts counting> mode displaying number of parts loaded on the weighing pan (**pcs** marking).

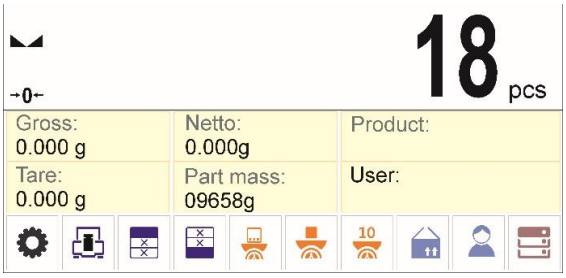

CAUTION!

It is important to remember the following:

- *Total mass of all parts loaded on the weighing pan must not exceed the maximum capacity (weighing range) of the balance;*
- *Total mass of all parts loaded on the weighing pan must not be lower than value declared in parameter **"Minimal reference mass"**. Unless this condition is met, the balance displays a message: **<Sample mass too low>**;*
- *Mass of a single part must not be lower than **0,1** of balance reading unit. Unless this condition is met, the balance displays a message: **<Single part mass to low>**.*

14.5. Acquiring Part Mass From a Database

Each product recorded in a database of products features set of information which allow to identify it. Among the information there is mass value used during part counting process.

Procedure:

Operating <Parts counting> mode, press < Product> button and using the list select a particular product. The program returns to <Parts counting> mode with single part weigh value set automatically on the basis of data recorded for a selected product.

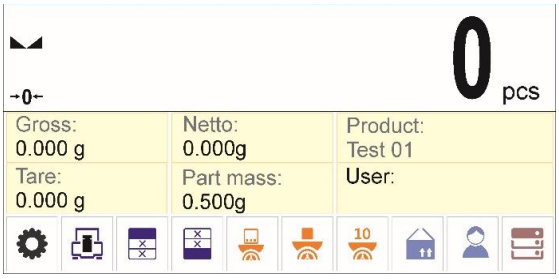

Entering reference mass to balance memory

Procedure for entering single part mass to products database:

- Press < Databases> button,
- While in database press <Products> button,
- Press + button (add product), located in the top bar,
- Fill in fields referring to product (Name, Code, EAN, Mass – for Parts Counting mode it is single part weight),
- Return to <Parts counting> mode.

14.6. Single Part Mass Update in the Database

- Determined single part mass can be assigned to a product in the database of products.
- Press <Products> database .
- Determine single part mass (13.3, 13.4).
- Press **<Assign reference sample mass>** button, reference sample mass for the product is recorded as **<Mass>**.

14.7. Parts counting procedure

The first step for Parts Counting mode is obtaining data on mass of a single part. Select one of available options:

- Give weight value of a single part (see point 13.3) and put parts to be counted on the weighing pan, balance displays totalized parts.

- Determine mass of a single part from a given quantity of parts (see point 13.4.). Put parts to be counted on the weighing pan, the balance displays totalized parts. In course of calculation,

  ACAI function pictogram <A> is displayed (providing the function is active).

- Acquire mass of a single part from database of products (see point 13.5.) by selecting a desired product record. Put parts to be counted on the weighing pan, the balance displays totalized parts.

***CAUTION!** Any additional elements (packaging) shall be tared prior to counting process start.*

With single part mass set, put parts to be counted into tare container weight of which has been stored by balance memory.
Number of weighed pieces is displayed on a screen.

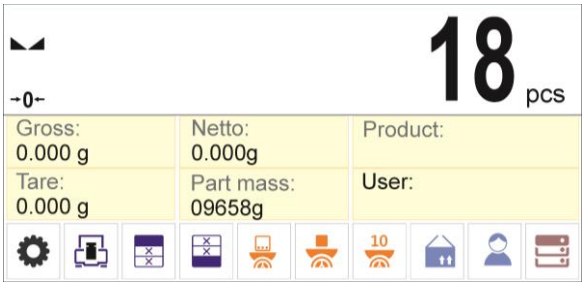

Stable measurement (stability pictogram displayed) can be printed, to do it press button.

15. CHECKWEIGHING

<Checkweighing> is a working mode using two thresholds (Min and Max) for control of samples weight. Usually the weight is considered to be correct if it is comprised within threshold values.

Procedure for activation of checkweighing mode

Select <Checkweighing> mode, home screen featuring checkweighing pictogram in a top bar is automatically displayed.

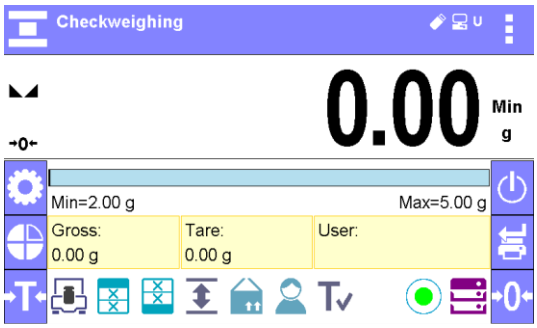

Info field provides the following information:

- Bar graph with checkweighing thresholds
- Gross weight,
- Tare weight,
- User,
- Keys: parameters, adjustment, print header, print footer, specify checkweighing thresholds, product, user, databases.

15.1. Supplementary Settings for Checkweighing Mode

The supplementary settings enable adjusting the working mode to your needs and requirements.
For means of operation of these functions read point 9.11 „WEIGHING mode settings”.
You can place the bar graph within information field area. Below the bar graph, Min and Max threshold values are displayed.

15.2. Checkweighing – quick access keys

Each working mode features automatically displayed set of default keys. The set can be modified by assigning out-of-list quick access keys to on-screen keys. Such operation requires particular permissions level.
Read section 7.6.1 for list of quick access keys.

Additional function in <Checkweighing> is <Result control>.

- **Result control**
  - YES, set to print and save only those measurements which are comprised within the Lo and Hi thresholds.
  - NO, set to print and save all measurements.

15.3. Making Use of Checkweighoing Thresholds

In order to use checkweighing thresholds:

- Select product <> with Min and Max threshold declared
- Enter numerical value for the thresholds using <> or <> or < > button, in this case thresholds do not refer to any product.

PROCEDURE 1 – selecting product from Products Database

- Press < Products Database> key.
- Using product list, select the product that is to be weighed.
- The balance displays threshold values under the bar graph within INFO area. Bar graph colour corresponds to the current status of weight:
  - Yellow colour: weight value below Min threshold value
  - Green colour: weight value within set threshold values
  - Red colour: weight value above Max threshold value

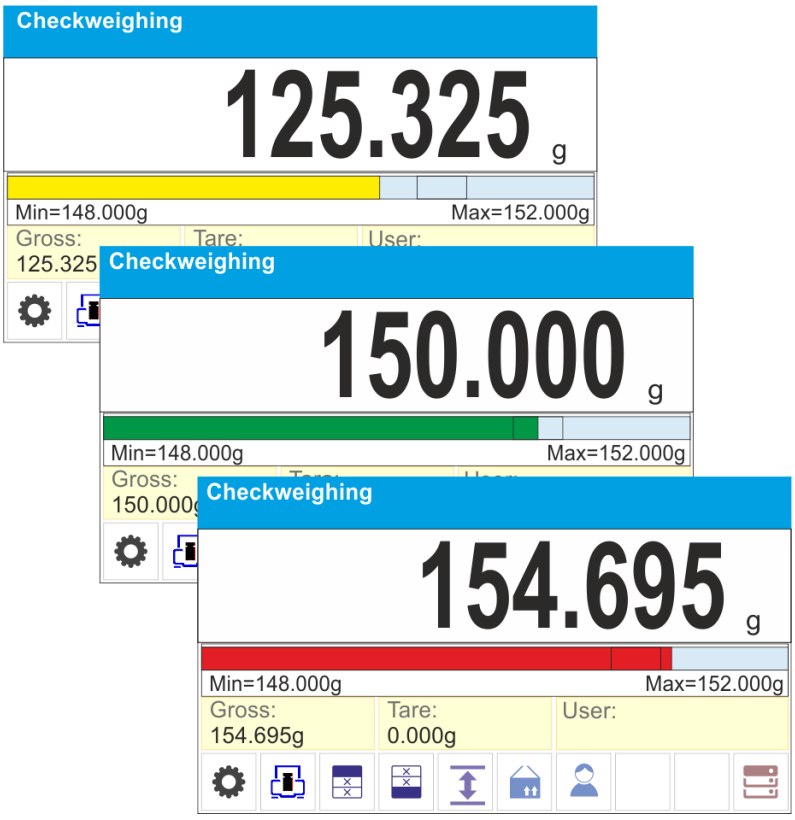

PROCEDURE 2 – entering checkweighing thresholds manually

- Press <Checkweighing Thresholds> button,
- Window with an on-screen numeric keyboard is displayed, use it to enter Min threshold value,
- Press <✓> button for confirmation,
- Window with an on-screen numeric keyboard is displayed, use it to enter Max threshold value,
- Press <✓> button for confirmation,
- Home screen of the mode is displayed with entered threshold values.

CAUTION!
Max threshold value has to be greater than Min threshold value.

For thresholds value modification the following buttons are used:

- - Min threshold value modification, enter the new value using an on-screen numeric keyboard, next press <✓> button for confirmation. Upon confirmation, home screen of checkweighing mode is automatically displayed.
- - Max threshold value modification, enter the new value using an on-screen numeric keyboard, next press <✓> button for confirmation. Upon confirmation, home screen of checkweighing mode is automatically displayed.

16. DOSING

<**Dosing**> is a working mode for performance of sampling process, wherein the sampling takes as long as it is necessary to obtain pre-defined target weight.

Procedure for activation of dosing mode

Select <Dosing> mode, home screen featuring dosing pictogram in a top bar is automatically displayed.

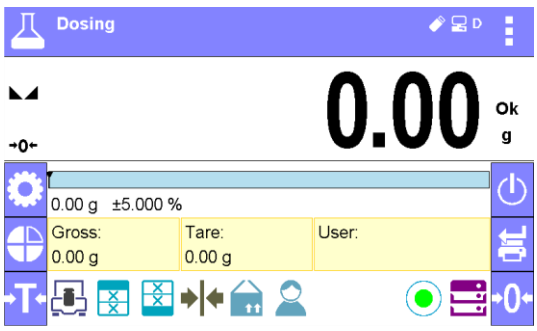

Info field provides the following information:

- Bar graph with target value
- Net weight,
- Tare weight,
- User,
- Keys: parameters, adjustment, print header, print footer, specify target value, product, user, databases.

16.1. Supplementary Settings for Dosing Mode

The supplementary settings enable adjusting the working mode to your needs and requirements.
For means of operation of these functions read point 9.11 „WEIGHING mode settings”.
You can place the bar graph within information field area. Below the bar graph, Min and Max threshold values are displayed.

16.2. Dosing – quick access keys

Each working mode features automatically displayed set of default keys. The set can be modified by assigning out-of-list quick access keys to on-screen keys. Such operation requires particular permissions level.
Read section 7.6.1 for list of quick access keys.

16.3. Making Use of Products Database for Dosing Operation

The operator can use target value assigned to a product or values recorded in Product Database. Additionally, option of user-defined temporary target values is at user disposal. Mass field is the target value for Product Database.

PROCEDURE 1 – selecting product from Products Database

- Press <Products Database> button.
- Using product list, select the product that is to be weighed.
- Target and tolerance values are displayed automatically within bar graph area.
- Target value with minus sign is displayed
- The balance displays threshold values under the bar graph within INFO area.

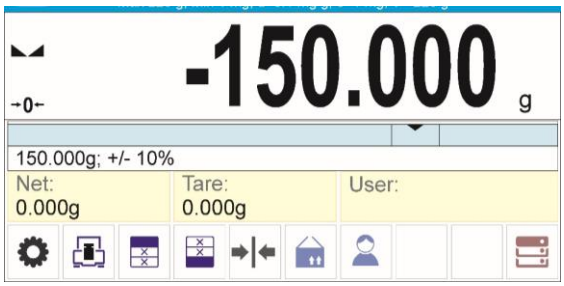

- Bar graph colour corresponds to the current status of weight:
  - Yellow colour: weight value below Target Value - Tolerance
  - Green colour: weight value within tolerance, Target Value +/- Tolerance
  - Red colour: weight value above Target Value + Tolerance

PROCEDURE 2 – target value entered manually

- Press < Target Value> button,
- Window with an on-screen numeric keyboard is displayed, use it to enter the target value,
- Confirm the entered value,
- Window with an on-screen numeric keyboard is displayed again, use it to enter the sampling tolerance value,
- Confirm the entered value, home screen of the mode is displayed.

17. PERCENT WEIGHING

<% Percent weighing> is a working mode for comparison of a measured sample with the reference mass. The result is expressed in [%].

Procedure for activation of Percent Weighing mode

Select <% Percent Weighing> mode, home screen featuring percent weighing pictogram % in a top bar is automatically displayed.

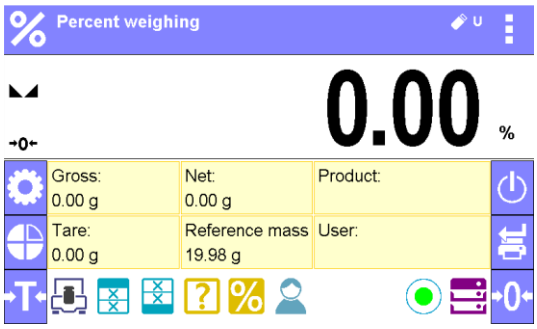

Info field provides the following information:

- Gross weight,
- Tare weight,
- Net weight,
- Reference mass,
- Product,
- User,
- Keys: parameters, adjustment, print header, print footer, set reference mass, determine reference mass (set as 100%), product, user, databases.

17.1. Supplementary Settings for Percent Weighing Mode

The supplementary settings enable adjusting the working mode to your needs and requirements.
For means of operation of these functions read point 9.11 „WEIGHING mode settings".

17.2. Percent weighing – quick access keys

Each working mode features automatically displayed set of default keys. The set can be modified by assigning out-of-list quick access keys to on-screen keys. Such operation requires particular permissions level.
Read section 7.6.1 for list of quick access keys.

17.3. Comparison of Sample to Reference Mass

Comparison of samples and reference mass can be carried out by means of:

- <Set reference mass> button used for entering reference mass value
- <Determine referernce mass (set as 100%)> button used for accepting current mass loaded on a weighing pan as a reference mass,
- <Product> button used for selecting a product, out of products database, for which mass parameter has been defined.

PROCEDURE 1 – determining reference mass manually

- Press < Set reference mass > button.
- Using an on-screen keyboard of a displayed window, enter reference mass value and press < > button for confirmation.

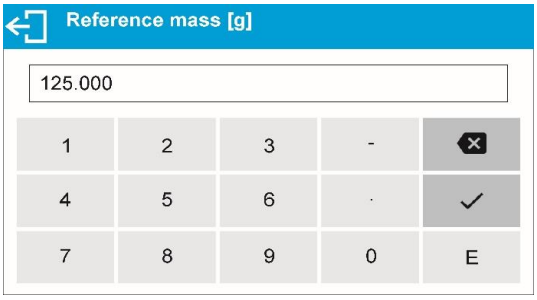

- Mass of all weighed products is compared to reference mass, the weight difference is displayed in [%].

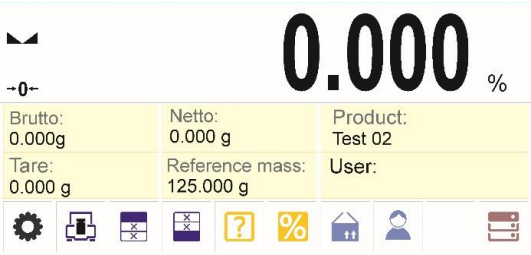

PROCEDURE 2 – accepting currently loaded mass as reference mass

- Put the sample on a weighing pan.
- On measurement result stabilization, press < Determine reference mass (set as 100%)> button, dialog bar with prompts is displayed at the bottom, follow the prompts.

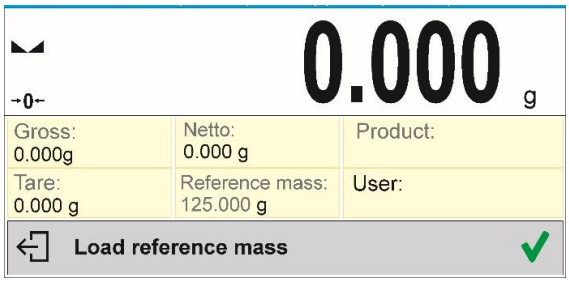

- Load the part to be weighed and upon measurement stabilization press button for confirmation,

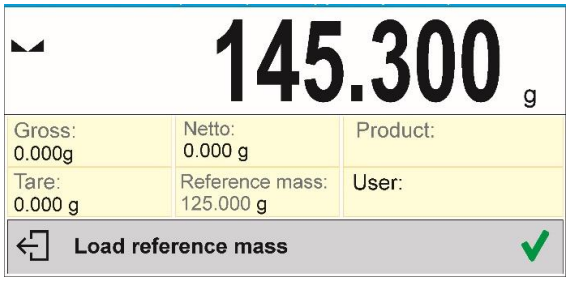

- 100.000% indication is displayed, loaded part weight is accepted as a reference mass, it is automatically recorded and displayed in reference mass field.

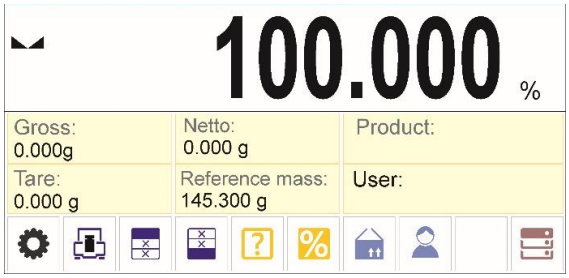

- Remove the sample form the weighing pan.
- All samples weighed afterwards are compared with the reference mass, and the display indicates the difference, expressed in [%], for each weighed sample in relation to the reference mass.

PROCEDURE 3 – selecting product from Products Database

- Press <Product> button, using displayed product list select the product that is to be weighed.
- ,,Info" field automatically displays new information on reference mass and product.

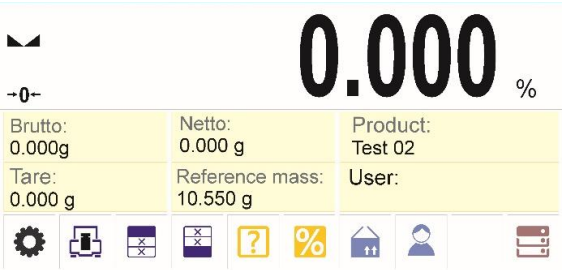

- Reference mass relating to the product is recorded automatically and displayed in reference mass field.
- 0.000 % indication is displayed (for unloaded pan).
- All samples weighed afterwards are compared with the reference mass, and the display indicates the difference, expressed in [%], for each weighed sample in relation to the reference mass

18. DENSITY OF SOLIDS

<Solids density> is a working mode enabling determination of density of a representative sample material.
In order to operate this mode, an optional density kit (supplementary equipment), appropriate to a model of used balance, is required. Prior to installing the kit it is necessary to remove the weighing pan and a draft shield.

Kit intended for PS balances featuring 128x128 mm weighing pan

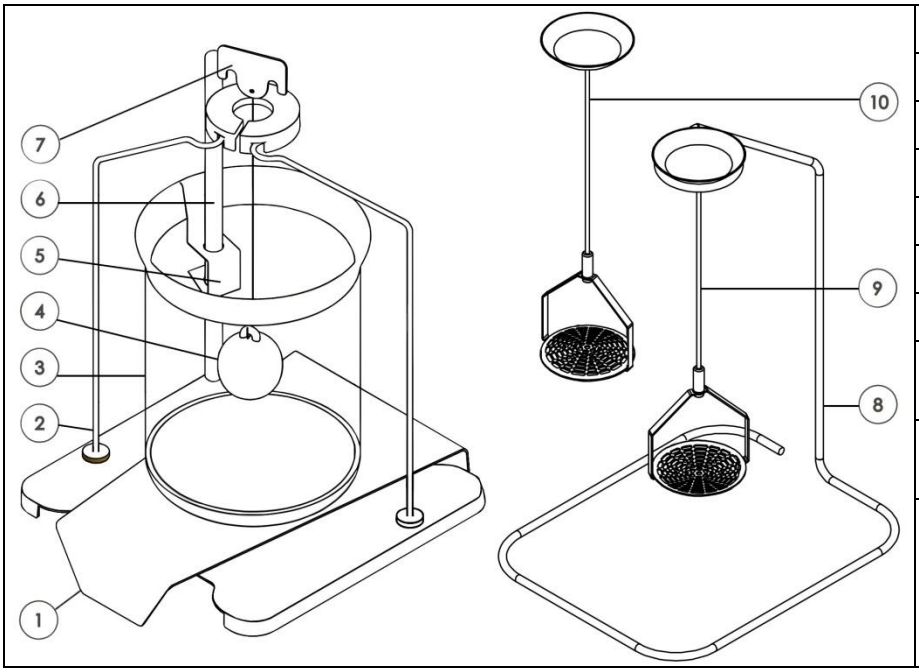

1	Beaker base
2	Stand
3	Beaker
4	Sinker
5	Thermometer holder
6	Thermometer
7	Hanger
8	Additional stand for a set of pans or a sinker
9	Weighing pan for solids density determination
10	Weighing pan for density determination of solids with density lower that density of water

Kit intended for AS balances.

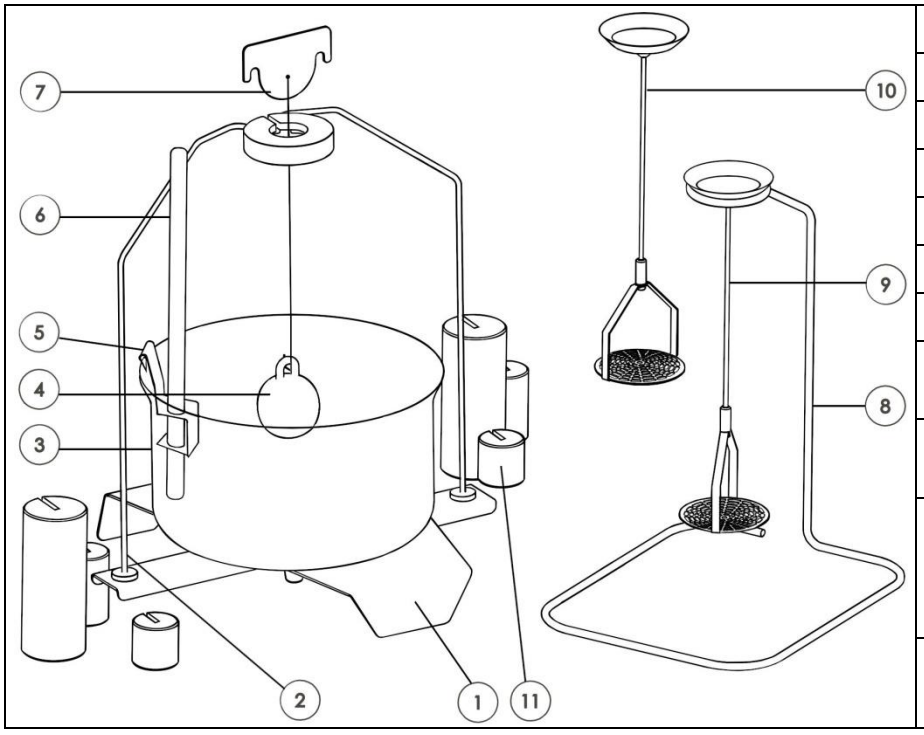

1	Beaker base
2	Stand
3	Beaker
4	Sinker
5	Thermometer holder
6	Thermometer
7	Hanger
8	Additional stand for a set of pans or a sinker
9	Weighing pan for solids density determination
10	Weighing pan for density determination of solids with density lower that density of water
11	Weights

Installation procedure:

AS balances	PS balances
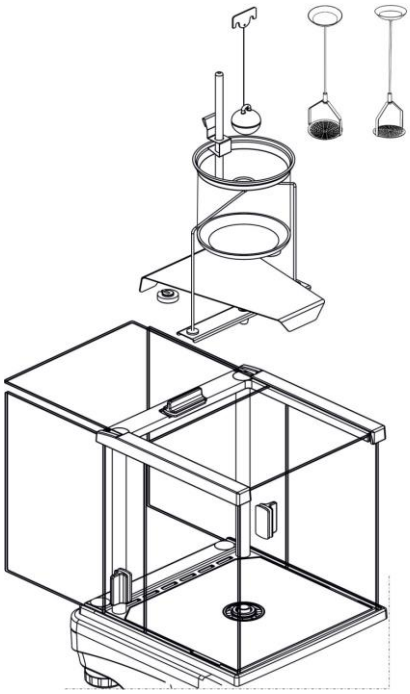	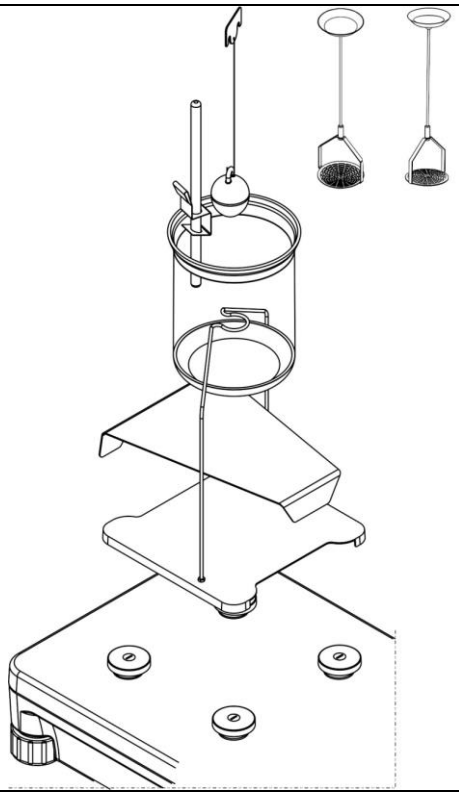

CAUTION!

- *Components of density determination kit shall be stored in a respective box.*
- *Weighing pans and sinker shall not be put directly on a table, this might cause their damage.*
- *Weighing pans and sinker, if not operated, shall be put on an additional stand.*
- *If the kit has been installed and -nuLL- message is displayed than the balance shall be loaded with weights set (12). Thus prepared balance can be used for density determination.*

Procedure for activation of Solids Density mode

Select <Solids Density> mode, home screen featuring solids density pictogram in a top bar is automatically displayed.

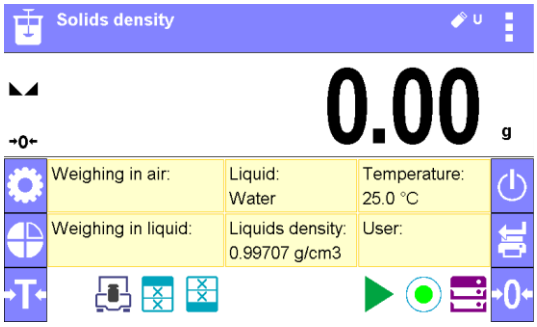

Info field provides the following information:

- Weighing in air,
- Weighing in liquid,
- Liquid,
- Liquid density,
- Temperature,
- User,
- Keys: parameters, adjustment, print header, print footer, product, user, start, databases.

18.1. Supplementary Settings for Solids Density Mode

The supplementary settings enable adjusting the working mode to your needs and requirements.

Liquid
Parameter allowing to specify liquid used for measurement performance: Water/Ethanol/Other.

Liquid density
Parameter allowing to enter density of liquid used for measurement performance. This parameter is operable only when OTHER option for LIQUID parameter has been selected.

Temperature
Parameter allowing to enter temperature of liquid used for measurement performance. Temperature value is necessary in order to take the right liquid density value needed for density calculation.
Balance software stores tables with density of water and ethanol in relation to temperature.

For means of operation of these functions read point 9.11 „WEIGHING mode settings".

18.2. Solids density – quick access keys

Each working mode features automatically displayed set of default keys. The set can be modified by assigning out-of-list quick access keys to on-screen keys. Such operation requires particular permissions level.
Read section 7.6.1 for list of quick access keys.

18.3. Solids density determination

Prior to procedure start, it is necessary to set process-related parameters:

- Liquid type
  - Distilled water
  - Ethanol
  - Other liquid with determined density
- Liquid temperature
  (required if either distilled water or ethanol is used as liquid for measurement performance)
- Liquid density
  The parameter is set automatically, after the temperature has been entered, if either distilled water or ethanol is used as liquid. In case of using liquid other than distilled water or ethanol, it is necessary to enter its density manually.

The density of solids is calculated using the following formula:

$$\rho = \frac{A}{A-B}\rho_o$$

ρ - density of a sample
A - sample's mass measured in the air
B - sample mass measured in liquid
ρ_o - liquid density

Determination of density for a particular solid consists in weighing the solid in the air first (using a top weighing pan (4) of the density determination kit), and in the liquid next (using a bottom weighing pan (2) of the density determination kit). Upon completed procedure the result is displayed automatically.

Procedure:

1. Install density determination kit.
2. Enter <SOLIDS DENSITY> function.

3. Prepare sample that is to be measured.
4. Start the process by pressing <Start> button.
5. Select liquid type intended for the test performance.
6. Enter the liquid temperature (the program displays the most recently operated temperature value).
7. If liquid assigned to OTHER parameter is used, enter its density for measurement temperature.
8. The following message is displayed in a bottom bar: Weighing in air. Load object.
9. Put your sample on a top weighing pan (sample weight measurement carried out in the air), confirm the indication upon stabilization.

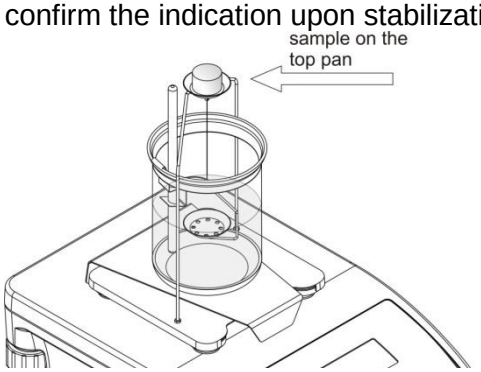

10. The following message is displayed in a bottom bar: Weighing in liquid. Load object.
11. Now put your sample on a bottom weighing pan (sample weight measurement carried out in the liquid), confirm the indication upon stabilization.

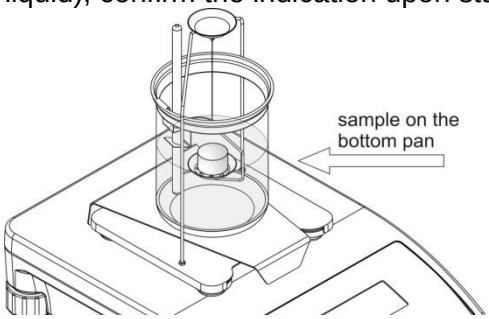

12. Upon confirmation of the second indication, the software automatically calculates measured solid density, which is next displayed together with a respective message, report on measurement is sent to a selected printer port.

1.981312 g/cm3 Weighing in air: 26.9823 g Liquid: Water Temperature: 25 C Weighing in liquid: 13.4038 g Liquids density: 0.9970 g/cm3 User: Indication	----------Solids density---------- Date 2015.04.29 Time 6:44:00 Balance Id 1236 User Admin Liquid Water Temperature 25.0 °C Liquids density 0.99707 g/cm3 Waighing in air 26.9823 g Waighing in liquid 13.4038 g Density 1.981312 g/cm3 ---------- Signature 1 .....
	An exemplary report

The report can be printed repeatedly, press <> key.

To finish density determination process, press key. The home screen for solid density mode is displayed. The next measurement can be started now. The balance operates with previously entered settings (liquid, temperature) thus providing quicker start of the very measurement.

19. DENSITY OF LIQUIDS

<Liquids density> is a working mode enabling determination of density of liquid with use of representative sample of a given liquid.
In order to operate this mode, an optional density kit (supplementary equipment), appropriate to a model of used balance, is required. Density determination kit is the same for solids and for liquids (for the kit description read the previous section).

The density of liquids is calculated using the following formula:

$$\rho = \frac{A - B}{V} + d$$

ρ - density of liquid
A - sinker weight measured in the air
B - sinker weight measured in water
V - volume of the sinker
d - air density (max 0,001 g/cm^3)

Procedure for activation of Solids Density mode

Select <Liquids Density> mode, home screen featuring liquids density pictogram in a top bar is automatically displayed.

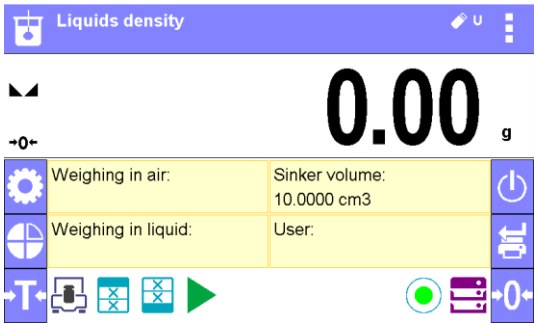

Info field provides the following information:

- Weighing in air,
- Weighing in liquid,
- Sinker volume,
- User,
- Keys: parameters, adjustment, print header, print footer, product, user, start, databases.

19.1. Supplementary Settings for Liquids Density Mode

The supplementary settings enable adjusting the working mode to your needs and requirements.

Sinker volume

Parameter allowing to enter volume of the sinker.

For means of operation of these functions read point 9.11 „WEIGHING mode settings”.

19.2. Liquids density – quick access keys

Each working mode features automatically displayed set of default keys. The set can be modified by assigning out-of-list quick access keys to on-screen keys. Such operation requires particular permissions level.
Read section 7.6.1 for list of quick access keys.

19.3. Liquids density determination

Glass-made sinker (9) is a basic component for liquid density determination. Its volume, given on a sinker hanger, is precisely calculated. Prior to determination, enter the sinker volume value into balance memory.
Determination of density for a particular solid consists in weighing the sinker in the air first, and in the liquid next. Upon completed procedure the result is displayed automatically.

Procedure:

1. Install density determination kit.
2. Enter <LIQUIDS DENSITY> function.
3. Prepare sample that is to be measured (pour tested liquid to the beaker).
4. Start the process by pressing <Start> key.
5. Enter the sinker volume (the program displays volume of the most recently used sinker).
6. The following message is displayed in a bottom bar: **Weighing in air. Place sinker.**
7. Hang the sinker on a stand (sinker weight measurement carried out in the air), confirm the indication upon stabilization.

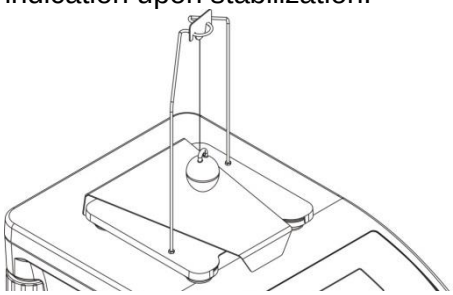

8. The following message is displayed in a bottom bar: **Weighing in liquid. Place sinker.**
9. Now take the sinker out of the stand and put a beaker on the beaker basis (the beaker cannot be in contact with the stand), gently hang the sinker on the stand making sure that it is completely immersed in the liquid (measurement carried out in the liquid), confirm the indication upon stabilization.

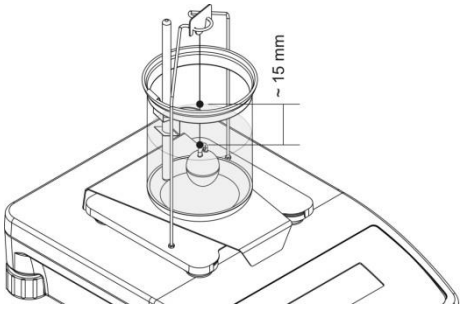

10. Upon confirmation of the second indication, the software automatically calculates measured liquid density, which is next displayed together with a respective message, report on measurement is sent to a selected printer port.

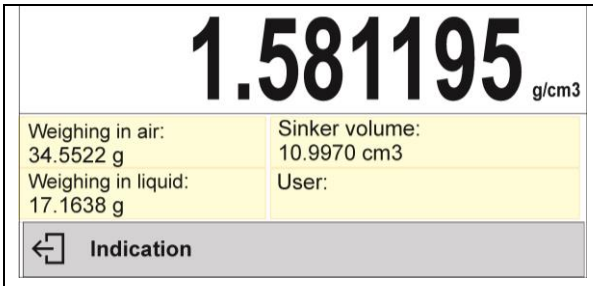

An exemplary report:

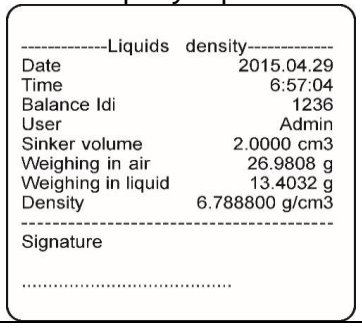

----------Liquids density----------

Date	2015.04.29
Time	6:57:04
Balance Idi	1236
User	Admin
Sinker volume	2.0000 cm3
Weighing in air	26.9808 g
Weighing in liquid	13.4032 g
Density	6.788800 g/cm3

Signature

.....

The report can be printed repeatedly, press <> key.

To finish density determination process, press key. The home screen for liquid density mode is displayed. The next measurement can be started now. The balance operates with previously entered settings (sinker volume) thus providing quicker start of the very measurement.

20. ANIMAL WEIGHING

<Animal weighing> is a working mode allowing reliable determination of mass of weighed objects in motion. In principle, this type of objects generate unstable measurement, thus it requires using a different filtering method of measurement signal.

Procedure for activation of Animal Weighing mode

Select < Animal Weighing> mode, home screen featuring animal weighing pictogram in a top bar is automatically displayed.

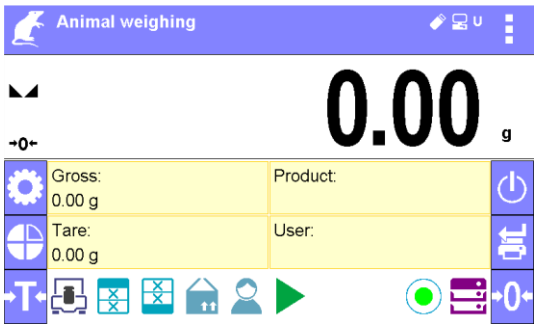

Info field provides the following information:

- Gross weight,
- Tare weight,
- Product,
- User,
- Keys: parameters, adjustment, print header, print footer, product, user, databases.

20.1. Supplementary Settings for Animal Weighing Mode

The supplementary settings enable adjusting the working mode to your needs and requirements.

Averaging time

Time interval within which measurements are analysed. Obtained data is used for calculation of measurement result. The result is given in [s].

Autostart

Parameter determining whether the measurement is to be carried out manually (on pressing key) or automatically:

- YES: automatically performed operation,
- NO: manually performed operation.

Automatic operation basis: the object is measured automatically when put on a weighing pan and when the indication exceeds pre-set threshold value (respective message is displayed).

On completed measurement procedure the following message is displayed.

“Freezed” measurement result is displayed.

Measurement of the next object begins after removing one object from the weighing pan (the indication is below the threshold value) and loading the pan with the next object at the moment when the indication exceeds the set threshold value.

Auto threshold

Value expressed in mass units.
In order to start the measurement, the indicated value has to be greater than the threshold value.

For means of operation of other settings read point 9.11 „WEIGHING mode settings”.

20.2. Animal weighing – quick access keys

Each working mode features automatically displayed set of default keys. The set can be modified by assigning out-of-list quick access keys to on-screen keys. Such operation requires particular permissions level.
Read section 7.6.1 for list of quick access keys.

Procedure for animal weighing

- Set the function parameters (averaging time, autostart, auto thres).
- Load the object that is to be weighed on a weighing pan, press < > key; for automatic operation, mass determination process starts when the pre-set auto threshold mass is exceeded.

- On completed mass determination process, „freezed” weighing result is displayed, the mass is automatically printed using the printer.

The weighing result can be printed repeatedly, press < > key.

- The next measurement can be carried out when < > key is pressed:
  - for manual operation press < > key,
  - for automatic operation, remove weighed object form the weighing pan and load the new object.

20.3. Animal weighing - statistics

Every measurement is saved in the balance memory together with its respective number. This function allows users to test items in the so-called series for which the balance program makes automatic statistical calculations.
For every series of measurements, the following operations are allowed: result preview, report printout, all statistics results deletion.
For the sake of smooth use of statistics options, you can use additional keys:

- enter the series statistical result preview option,

- print out results with their automatic deletion (end of series).

Procedure 1:

1. Press <Results> key.

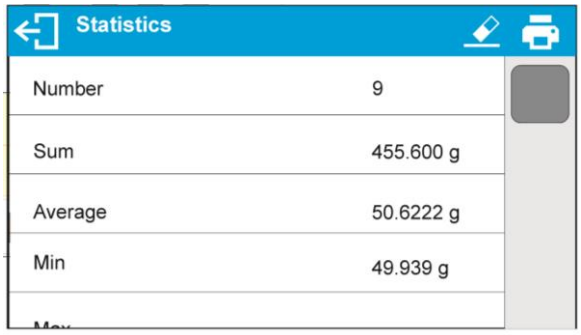

2. The screen will show measurement results and the top bar will display the following options: Delete, Print.

3. Select:

   – - to print the report out,

An exemplary report:

```
-------------- Statistics --------------
Number                              9
Sum                           455.600 g
Average                      50.6222 g
Min                           49.939 g
Diff                          51.380 g
Difference                     1.441 g
SDVP                         0.39605 g
SDVS                         0.38505 g
RDVP                            0.78 %
RDVS                            0.82 %
----------------------------------------
```

   – - if you want to delete all information on statistics.

Procedure 2:

Press <End> key to automatically print statistical data out and delete these data instantly

21. STATISTICS

<Statistics> is a working mode allowing to acquire data from series of measurements and to produce statistics using the acquired data. Settings of this function determine which data is displayed.

Procedure for activation of Statistics mode

Select <Statistics> mode, home screen featuring statistics pictogram in a top bar is automatically displayed.

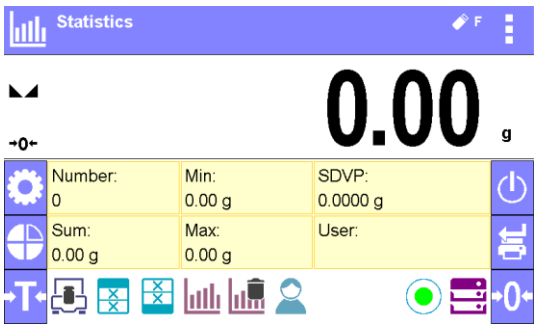

Info field provides the following information:

- N (number of samples),
- Sum (total weight of samples within a series)
- Min (minimum value in a series)
- Max (maximum values in a series)
- SDVP (standard deviation of population)
- User
- Keys: parameters, adjustment, print header, print footer, statistics, delete statistics, product, user, databases.

21.1. Supplementary Settings for Statistics Mode

The supplementary settings enable adjusting the working mode to your needs and requirements.
For means of operation of these functions read point 9.11 „WEIGHING mode settings".

21.2. Statistics – quick access keys

Each working mode features automatically displayed set of default keys. The set can be modified by assigning out-of-list quick access keys to on-screen keys. Such operation requires particular permissions level.
Read section 7.6.1 for list of quick access keys.

21.3. Parameters for Series of Measurement

For each series of measurements it is possible to overview the results, print a report, delete results of all statistics.

Procedure 1:

- Press <Results> button

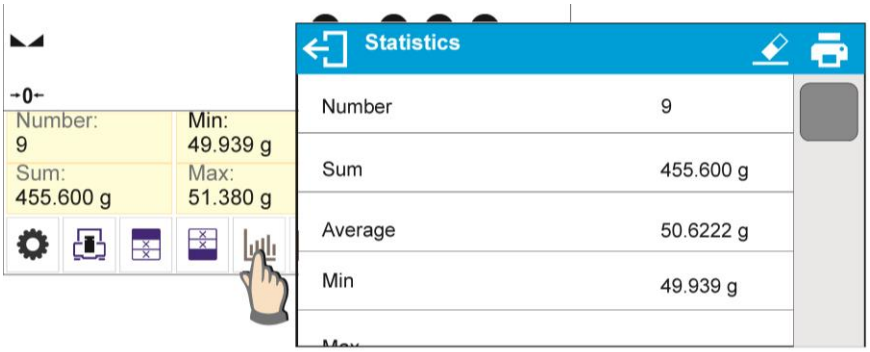

- Results of performed measurements are displayed, top bar features delete and print options.
- Select:
  - , if you want to print a report

```
-------------- Statistics -------------
-
Number                              9
Sum                       455.600 g
Average                  50.6222 g
Min                       49.939 g
Max                       51.380 g
Diff                       1.441 g
SDVP                     0.39605 g
SDVS                     0.38505 g
RDVP                        0.78 %
RDVS                        0.82 %
----------------------------------------
```

  - , if you want to delete all information on statistics

Procedure 2:

- press <Finish> button, statistical data is printed and deleted automatically.

22. PEAK HOLD

< Peak Hold> is a working mode allowing you to snap value of maximum force applied to the weighing pan during one loading. Apart from standard settings for this mode (described in the weighing mode), additional parameter has been introduced, it sets threshold value determining function activation.

Procedure for activation of Peak Hold mode

Select <Peak Hold> mode, home screen featuring peak hold pictogram in a top bar is automatically displayed.

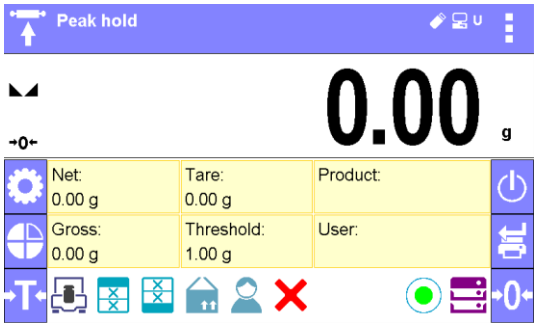

Info field provides the following information:

- Net
- Gross
- Tare
- Threshold
- Product
- User
- Keys: parameters, adjustment, print header, print footer, product, user, delete, databases.

22.1. Supplementary Settings for Peak Hold Mode

The supplementary settings enable adjusting the working mode to your needs and requirements.

THRESHOLD – function determining start point for peak hold control performed by the balance software. Remember to set this threshold prior to the measuring process.

For means of operation of these functions read point 9.11 „WEIGHING mode settings".

22.2. Peak hold – quick access keys

Each working mode features automatically displayed set of default keys. The set can be modified by assigning out-of-list quick access keys to on-screen keys. Such operation requires particular permissions level.
Read section 7.6.1 for list of quick access keys.

22.3. Means of Operation

- Enter <PEAK HOLD> mode
  Once you select the mode, the function is active. In order to provide proper operation, set the threshold in grams determining point beyond which the function starts to register maximum force apllied.
- From now on the balance registers and holds every single weighment which is above the threshold, and which is higher than the result of the previous peak hold. If the software detects

mass above the threshold, the highest detected indication is held on the main display and the pictogram <Max> is shown on the right over the measuring unit.

- Press button in order to print the result.
- The start of the next process of peak hold measurement is possible only after removing the load from the weighing pan and pressing button. This causes returning to the home screen of <PEAK HOLD> mode, pictogram <Max> is automatically deleted.

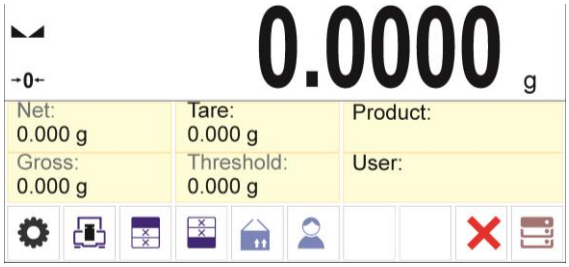

23. FORMULATIONS

<■■ Formulations> is a working mode allowing you to prepare multi-ingredient mixture. The whole process is performed automatically.
While making mixtures you can:

- **use formulations database**, the program helps you dose particular ingredients, you are prompted with messages providing you with respective instruction,
- make mixture on your own, without using formulations database, with this option you control ingredients dosing, sequence and quantity by yourself.

If you want to use formulations database, first you have to make formulation, next apply it. Making formulations is possible using Formulation Database option. Read down below for detailed procedure.

Procedure for activation of Formulations mode

Select <■■ Formulations> mode, home screen featuring animal weighing pictogram ■■ in a top bar is automatically displayed.

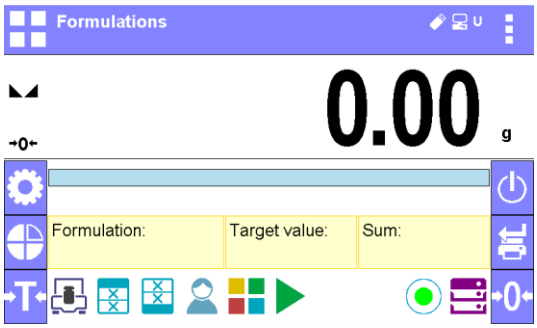

Info field provides the following information:

- Bar graph,
- Formulation,
- Target value,
- Sum,
- Keys: parameters, adjustment, print header, print footer, product, user, formulation, start, databases.

CAUTION!
Information area may contain bar graph – a graphic interpretation of ingredient weight which informs if the weight stays within correct thresholds and specified +/- tolerance.

23.1. Supplementary Settings for Formulations Mode

The supplementary settings enable adjusting the working mode to your needs and requirements.

Multiplier
Option designed to allow preparation of respectively larger amount of particular mixture, made in accordance with selected formulation, within one weighing process:

- **YES**, on selecting a formulation for processing, the software asks you to specify multiplier value, each ingredient is next multiplied by this value in course of weighing, i.e. entered multiplier value is valid for all the ingredients.
- **NO**, entering multiplier value is disabled, by default the value is set to <1>.

23.2. Formulations – quick access keys

Each working mode features automatically displayed set of default keys. The set can be modified by assigning out-of-list quick access keys to on-screen keys. Such operation requires particular permissions level.
Read section 7.6.1 for list of quick access keys.

23.3. Adding Formulation to Formulations Database

Formulation database menu has been designed to enable adding formulations. You can add up to 100 formulations consisting of 25 ingredients maximally.

Formulation database contains formulations names, ingredients names and their weight. For formulation you can use a database-recorded product or product with unspecified name. For each used product enter weight value determining how much of the ingredient is to be added to mixture, next specify tolerance thresholds for dosing. Weight value and tolerance enable display of bar graph providing information on amount of dosed ingredient (read Dosing section for detailed description of bar graph).
While adding formulation, first it is necessary to name products required for the formulation. In course of adding, specify ingredients and their weight.
Particular procedure steps are displayed in a form of prompts.
Make sure you know complete recipe as it is necessary to specify name and weight of each mixture ingredient.

Procedure:

- Enter <Databases> submenu, press <Formulations> key.
- Press < + Add> key for adding a new formulation.

New record is added and edited automatically. Enter necessary data.

List of information defined for formulation:

- Name: click Name button, new window opens, go to the window and enter formulation name.

- Code: click code button, new window opens, go to the window and enter code number.
- Ingredients: click ingredients button, list of formulation ingredients is displayed (for new formulation the list is empty), add the ingredients:
  - press <+ Add> button,

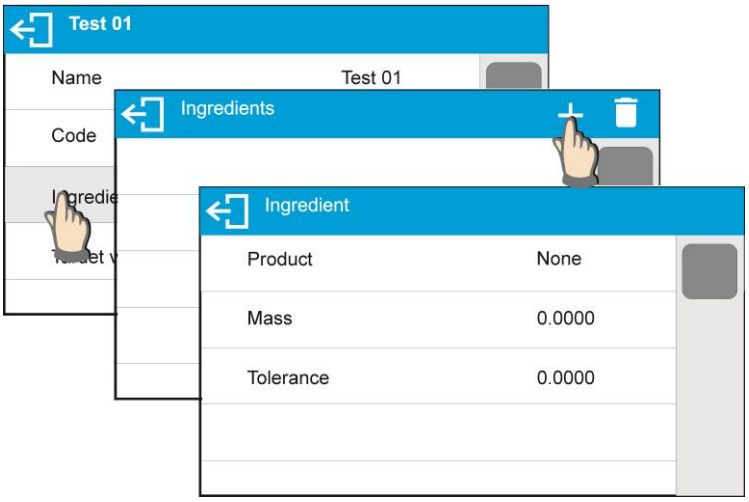

  - new record is added and edited automatically, enter respective ingredient data,
  - press button to go one level up,

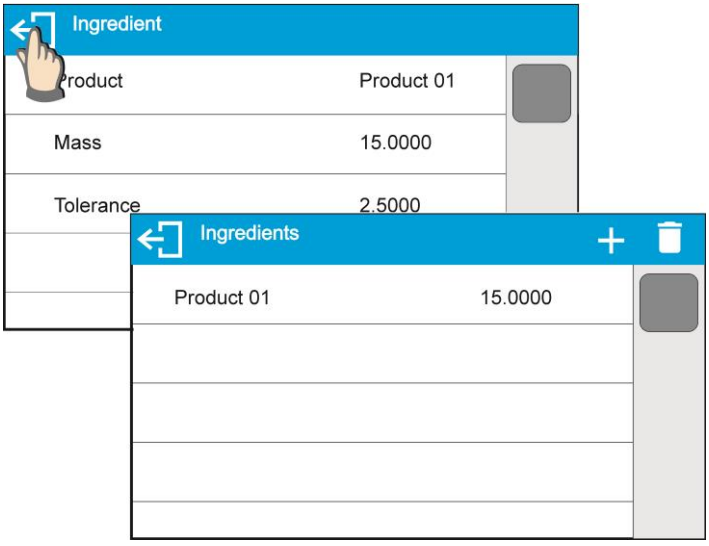

  - enter remaining formulation ingredients.
- Target value – target weight, total mass of all the ingredients, non-editable option, it is updated automatically by the program upon each ingredient adding.

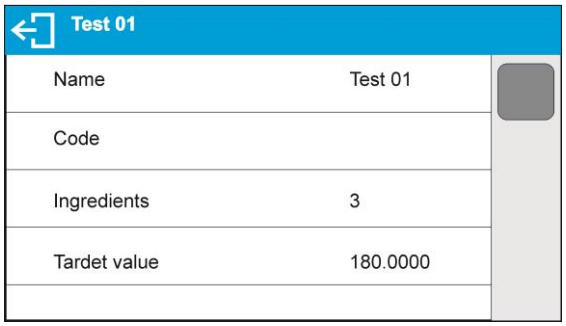

- Go back to the home screen.

23.4. Using Formulations for Weighing

With FORMULATIONS function launched, you can prepare mixture either manually or by selecting formulation out of database.

Mixture preparation options:
- formulation that is not saved in the Formulation Database – i.e. “manually”,
- formulation that is saved in the Formulation Database,
- formulation that is saved in the Formulation Database – using multiplier function.

Select a particular formulation, weigh each of its ingredients. Wait for the indication to stabilize next press <✓> button, with this weight of each ingredient is tared, i.e. it is accepted for the total mass of the formulation.

Press <⇦> button to cancel the formulation making process. Now you can prepare a different formulation.

PROCEDURE 1 – Preparing formulation that is not saved in the Formulation Database – i.e. “manually”.

Following the prompts:
- load container intended for the ingredients,
- go to quick access bar and press Start <▶> button,
- list of formulations is displayed,
- press <None> button,

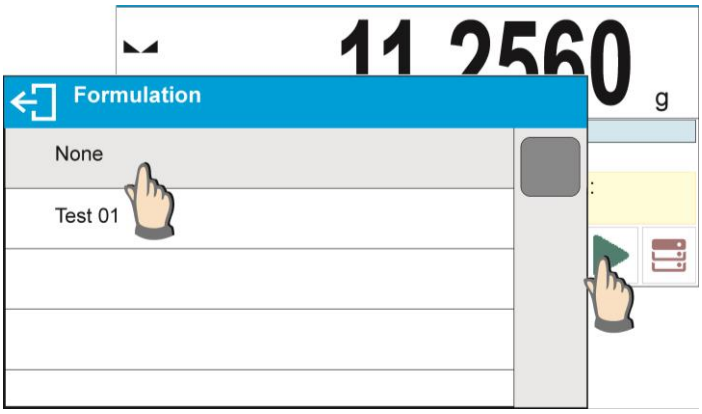

- home screen is displayed, container weight is tared automatically, navigation bar with messages for ease of operation is shown,

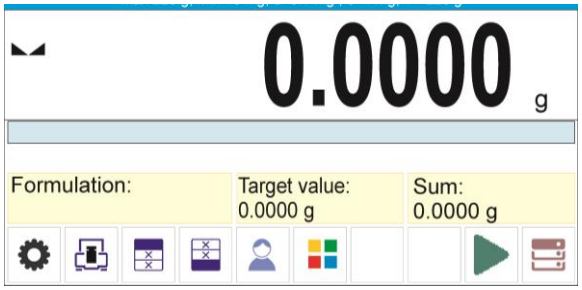

- pour specified amount of ingredient no. 1,
- press <✓> button to confirm,
- ingredient weight 1 is recorded into balance memory (Sum field provides weight of dosed ingredient no.1), indication is tared,

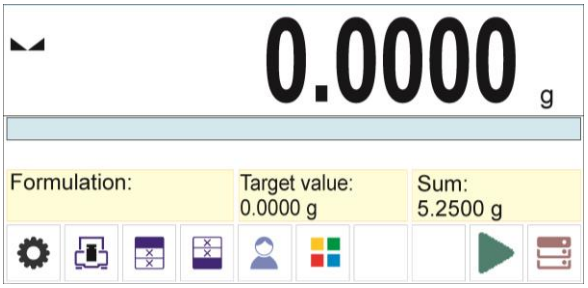

- repeat the steps for remaining mixture ingredients,
- having completed dosing press button,

  wait to see the following message: Weigh to reach specified weight? ✓, press ✓ button in order to boost mixture weight to a specified value,
- main window displays net weight of already weighed ingredients, respective message is provided at the bottom bar,

- boost mixture weight, weigh as much as required to provide specified weight value,

- press ✓ button to confirm, mixture dosing ends, formulation report is printed and recorded in a database (read next section of this manual to view an example of the report), the following message is displayed: Completed ✓,
- press ✓ button in order to proceed to other opersations.

or:

- with the last ingredient dosed and weighed, press button,
- wait to see the following message: Weigh to reach specified weight?, press button again in order to resign from boosting mixture weight to a specified value, if there is such a need,
- wait to see the following message: Confirm to finish,
- press button to confirm, mixture dosing ends, formulation report is printed and recorded in a database (read next section of this manual for an example of the report), the following message is displayed: Completed,
- press button in order to proceed to other opersations.

PROCEDURE 2 – Preparing formulation that is saved in the Formulation Database. Basic option for creating recipes.

Following the prompts:

- load container intended for the ingredients,
- go to quick access bar and press Start < > button,
- list of formulations is displayed, select the formulation that is to be carried out,

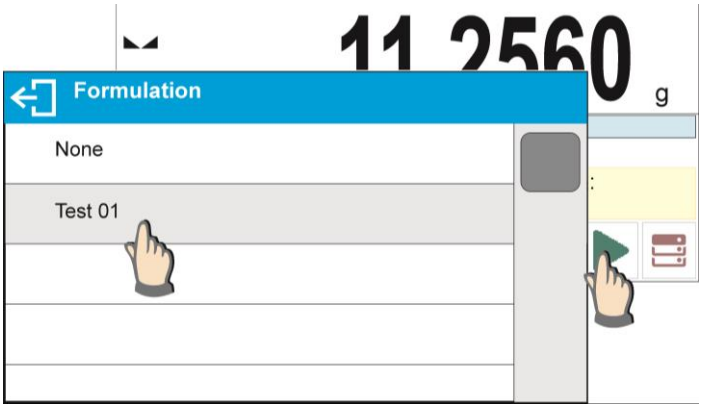

- home screen is displayed, container weight is tared automatically, <Formulation> field provides formulation name, <Target value> field provides total weight value for a selected formulation, navigation bar with messages for ease of operation and with names of particular mixture ingredients is shown,

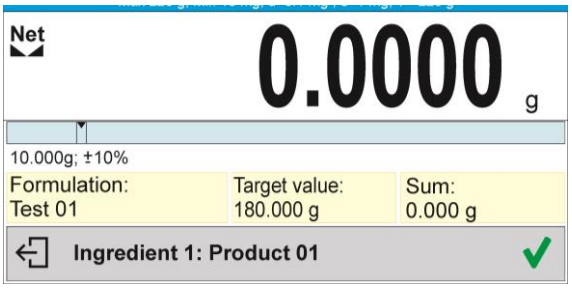

At the top of information area there is a bar graph, underneath the bar graph weight value that is to be dosed is displayed. Bar graph colour changes gradually depending on the ingredient weight (read Dosing section for detailed description of bar graph).

- pour specified amount of ingredient no. 1,
- press < > button to confirm,

- weight of ingredient 1 is recorded into balance memory (Sum field provides weight of dosed ingredient no.1), indication is tared,

- repeat the steps for remaining mixture ingredients,
- when dosing is completed formulation report is printed and recorded in a database (read next section of this manual to view an example of the report), the following message is displayed:

- press ✓ button in order to proceed to other opersations,
- press button to abort formulation any time you need.

PROCEDURE 3 – Preparing formulation that is saved in the Formulation Database – using multiplier function.

Go to Formulation mode settings and set <Multiplier> parameter to <YES> value, next follow the below procedure.

Procedure:

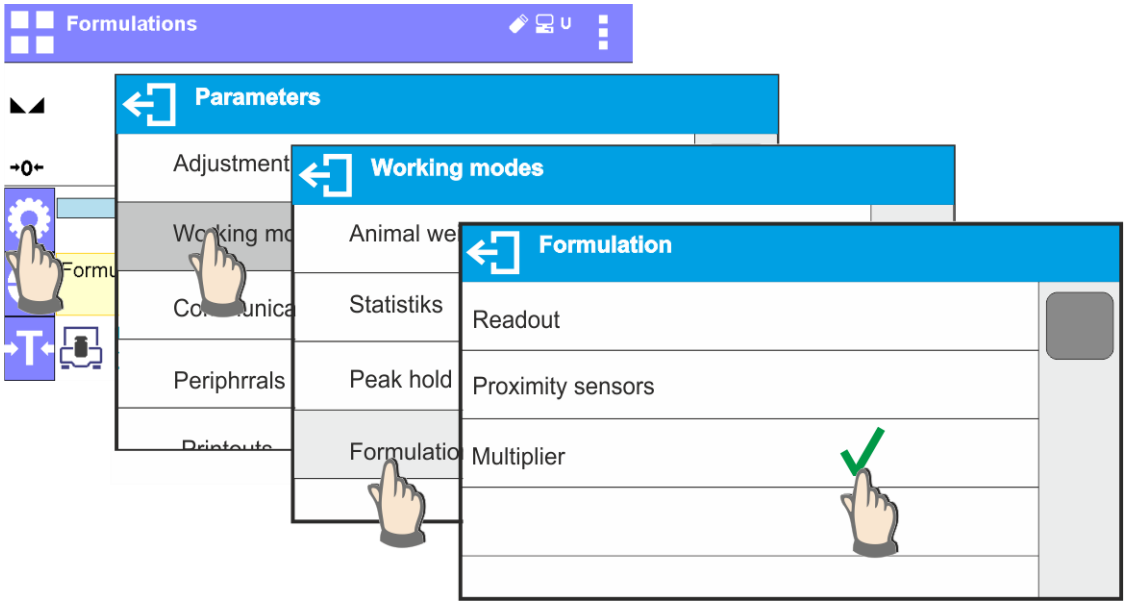

- With <YES> value selected, the program asks you to specify multiplier value prior to each process start.

Following the prompts:

- load container intended for the ingredients,
- go to quick access bar and press Start <▶> button,
- list of formulations is displayed, select the formulation that is to be carried out,

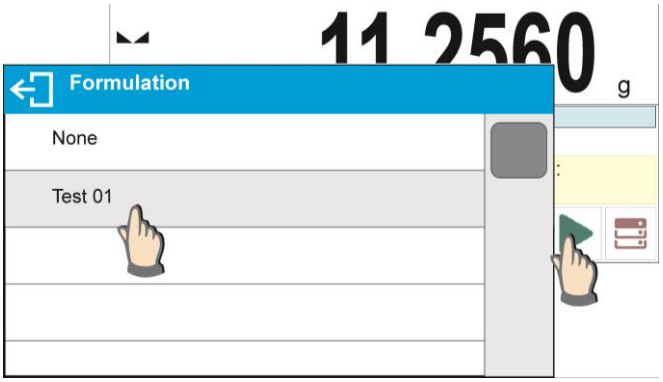

- window with numeric keyboard is displayed, enter the multiplier value,

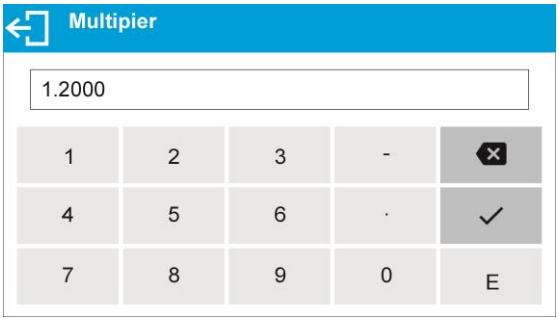

- home screen is displayed, container weight is tared automatically, <Formulation> field provides formulation name, <Target value> field provides total weight value for a selected formulation, navigation bar with messages for ease of operation and with names of particular mixture ingredients is shown,

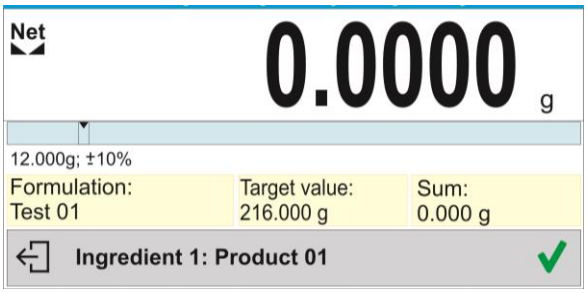

Weight of ingredient from bar graph area is also multiplied by the multiplier

- now follows steps like for formulation without the multiplier.

23.5. Performed formulations report

Upon each completed formulation process the program generates a report. The report is recorded in <Formulations reports> database. Report file name contains date and time of particular process performance.

Report example:

---------- Formulation Report ----------

User	*Nowak Jan*
Formulation name	*Test 1*
Start date	*2015.07.10 13:21:40*
End date	*2015.07.10 13:22:28*
Ingredients quantity	*5*
Measurements quantity	*5*
---------- Ingredient 1 ----------	
Name	*Product 01*
Weight	*19.994 g*
---------- Ingredient 2 ----------	
Name	*Product 02*
Weight	*49.993 g*
---------- Ingredient 3 ----------	
Name	*Product 03*
Weight	*9.999 g*
---------- Ingredient 4 ----------	
Name	*Product 04*
Masa	*1.001 g*
---------- Ingredient 5 ----------	
Name	*Product 05*
Weight	*19.995 g*
Sum	*100.982 g*
Target value	*101.000 g*
Difference	*-0.018 g*
Status	*Completed*

Signature

.....

24. ADDING

<Σ Adding> function allows you to add net masses of weighed samples.
This function enables adding maximum 9999 ingredients in one cycle or such quantity of samples which value of totalized masses is possible to be displayed on 8-section display.

Procedure for activation of Adding mode:

- Enter <Adding> mode. Program automatically returns to the home screen and displays Σ pictogram in the upper part of the display:

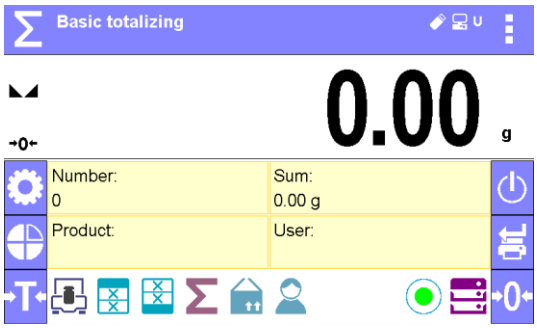

Info field provides the following information:

- Quantity (quantity of samples measured in a series)
- Sum (total mass of samples in a series)
- User
- Buttons: parameters, adjustment, print header, print footer, results, product, user, databases

24.1. Supplementary Settings for Adding Mode

The supplementary settings enable adjusting the working mode to your needs and requirements.
For means of operation of these functions, read point 9.11 *<WEIGHING> mode settings.*

24.2. Adding – quick access keys

Each working mode features automatically displayed set of default keys. The set can be modified by assigning out-of-list quick access keys to on-screen keys. Such operation requires particular permissions level. Read section 7.6. for list of quick access keys.

24.3. Means of Operation

- Enter <ADDING> mode. Data on quantity of ingredients, that are added to the total sum, and the total mass are displayed in the home screen.
- Load the weighing pan with the first sample. Confirm its mass when stable by pressing button. Sample mass is saved to the sum. In the bottom line, data on ingredients quantity and total sum is changed and data on saved measurement is printed.

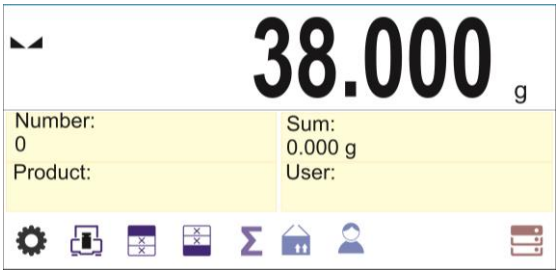

1. Net	38.00 g
Tare	0.000 g
Gross	38.00 g

- Next, take off the first sample and load the weighing pan with the second one. Confirm its mass when stable by pressing button.
- Add rest of the samples left in a measurement series.

On adding all samples, end adding procedure by following the steps:

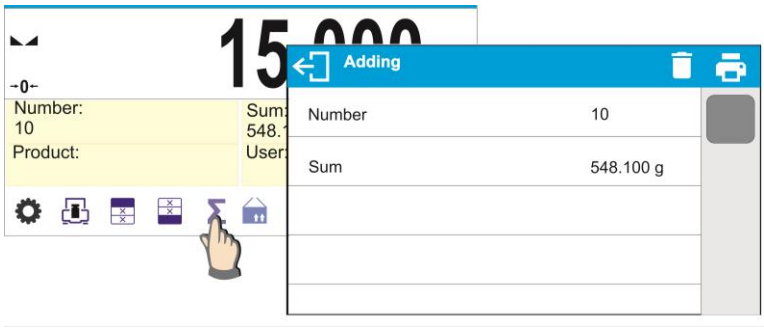

Results of carried out measurements and the following options are displayed: Delete, Print.
Select option:

– - to print the summary without deleting results, you can continue adding masses on returning to the home screen
– - to delete measurement series and, at the same time, to print the summary.

An exemplary printout:

```
1. Net          38.000 g
Tare             0.000 g
Gross           38.000 g

.
.
.

10. Net         15.000 g
Tare             0.000 g
Gross           15.000 g
----------Adding----------
Sum              0.00 g
-------------------------
```

CAUTION: On adding process completion, only a summary is printed. The masses of particular samples are printed on confirmation.

If samples are measured with packagings, load the weighing pan with the packaging, wait for stabilization and press →T← button.

CAUTION: for ADDING mode, on pressing button (confirming mass of measured sample) data connected with the measurement is printed. The following data can be printed: ***Measurement number****,* ***NET mass*** *(in calibration unit),* ***TARE mass*** *(in current unit),* ***GROSS mass*** *(in current unit), and* ***current result*** *(in current unit). Data for printing is to be set in GLP PRINTOUT parameter - see point 12.2 of this user manual. Other information (except the above-listed), such as: USER, PRODUCT, DATE, TIME, VARIABLE 1, VARIABLE 2, CALIBRATION REPORT, NON-STANDARD PRINTOUT are not printed in this mode, regardless their settings.*

25. STATISTICAL QUALITY CONTROL - SQC

The **<Statistical Quality Control>** working mode proves useful for various product packing procedures in order to monitor and/or supervise packing. It allows detecting excessive and insufficient product quantity in packaging. If samples are weighed and results stored in the base, the program can be used to analyse trends displayed in the form of diagrams.
Thanks to the program, you can inspect the batch of up to 250 samples.
Every control is saved in the database in the <Control Reports> menu and you can see its results at any time. The following data are calculated and stored in the base for each batch: maximum value, minimum value, standard deviation, average values for each batch, etc.

The SQC control can be manual (press <PRINT> key for each measurement) or automatic (measurements are automatically recorded after the result for each sample has stabilised).

The balances are supplied with a statistical control module based on a database with a list of goods with errors declared for each product: <T4->; <T3->; <T2->; <T1->; <T1+>; <T2+>; <T3+>; <T4+>.
The control that starts from the balance is automatically terminated after a suitable number of samples, specified by the user in the SQC mode settings, have been inspected. Once the control is over, a final report with all required information on control is generated, and it is possible to print it out via the printer connected. The control data are automatically saved in the Control Report Base too.

The sequence of operations under the control:

- operator selection,
- product selection,
- control start,
- weighing record collection**,**
- automatic end of control after weighing a specific number of samples (batch),
- printout of the control report.

25.1. Working mode activation

To start control:

- An operator permitted to conduct the control must be logged in.

Note:

1. *To start control, it is necessary to select an operator with **<Operator>** permission level. If no operator has been logged into the balance, the following message will be displayed upon program control launch: **<Operator not logged in>***
2. *The logging procedure is described in the point 9 of the manual, while operator permission assignment in the point 10 of the manual.*

- Enter general parameters of the **<SQC>** working mode into the balance memory; see description in point 25.2.
- Select relevant product (press relevant button in the button bar <> with properly entered control-related data).

  Note:
  The product data that must be entered before the control starts can be found in the table below. The SQC option is visible only when the SQC mode is currently used. Other product settings do not matter while working in the SQC mode.

Mass	Nominal mass of the product.
Tare	Packaging mass in the adjustment unit.
SQC mode	Full Empty-full Full-empty

Batch portion	If the SQC Empty-full or full-empty mode is selected, a relevant batch portion value must be set.
SQC unit	g mg ml
Density	If [ml] unit is selected, set a correct liquid density value to assure proper volume-into-mass calculation.
SQC	
Threshold mode	Declare if threshold values will be entered as mass units [g] - <Absolute value> or percent from product nominal value - <Relative value>.
Threshold base	Declare which of the values: nominal or average is to be the base value for calculation of thresholds as per declared error values.
Batch quantity	Declare quantity of the batch in question.
Error value [T4-]	The value of the T4 limit error, minus from the nominal mass.
Error value [T3-]	The value of the T3 limit error, minus from the nominal mass.
Error value [T2-]	The value of the T2 limit error, minus from the nominal mass.
Error value [T1-]	The value of the T1 limit error, minus from the nominal mass.
Error value [T1+]	The value of the T1 limit error, plus from the nominal mass.
Error value [T2+]	The value of the T2 limit error, plus from the nominal mass.
Error value [T3+]	The value of the T3 limit error, plus from the nominal mass.
Error value [T4+]	The value of the T4 limit error, plus from the nominal mass.
Disqualifying quantity of samples [Qn-T4]	The value of limit of T4 error occurrence, minus from nominal mass.
Disqualifying quantity of samples [Qn-T3]	The value of limit of T3 error occurrence, minus from nominal mass.
Disqualifying quantity of samples [Qn-T2]	The value of limit of T2 error occurrence, minus from nominal mass.
Disqualifying quantity of samples [Qn-T1]	The value of limit of T1 error occurrence, minus from nominal mass.
Disqualifying quantity of samples [Qn+T1]	The value of limit of T1 error occurrence, plus from nominal mass.
Disqualifying quantity of samples [Qn+T2]	The value of limit of T2 error occurrence, plus from nominal mass.
Disqualifying quantity of samples [Qn+T3]	The value of limit of T3 error occurrence, plus from nominal mass.
Disqualifying quantity of samples [Qn+T4]	The value of limit of T4 error occurrence, plus from nominal mass.

Note:
The product edition in the database is described in the point 27.2 of the manual.

- Return to the home screen of the **<SQC>** mode and press the on-screen functional key: ▶ (control start) that can be found in the lower part of the screen.
- The **<Batch Number>** edit box and an on-screen keyboard will be automatically displayed (only when you select <YES> for <Ask about batch number> in the mode settings).
- Enter the desired batch number for the product in question and press ✓ to confirm.

Note: *The operator can abort the control at any time by pressing the on-screen functional key:* ⇦ *(control stop), located in the lower part of the screen.*
During control, other on-screen buttons, functional keys, balance keyboard keys are blocked.

25.2. Additional settings related to sqc

These settings allow adapting the working mode to own requirements.

The SQC process is related to such settings as:

- **Ask about batch number**

  Set <YES> value to make the program request you to enter product batch number before the control procedure starts.
  Procedure:
  Select <Ask about batch number> to display the box with setpoints: <No> - option disabled, <Yes> - option enabled.
  Select the desired value and wait for the program to display the previous box.

- **Batch number**

  The parameter allowing you to enter the number for identification of batch of products in question.
  Procedure:
  Select the parameter: <Batch number> and you will see the <Batch number> edit box with a numerical keyboard.

  Enter the desired value of the batch number and press ✓ to confirm.

- **Automatic tarring**

  Set <YES> value to automatically tare the balance reading value after accepting particular measurements during control. The control does not require unloading after saving the measurement. Make sure the total mass of test samples and container does not exceed the maximum loading capacity of the balance.
  Procedure:
  Select the parameter: <Automatic tarring> and you will see a box with setpoints: <No> - option disabled, <Yes> - option enabled.
  Select the desired value and wait for the program to display the previous box.

- **Printout mode**

  The working mode selection. For the <When stable> setting, you can accept the result by manually pressing the pictogram in the lower bar of the screen. For the <Auto> setting, actions are taken in accordance with the description in the point 9.14.

The principle of using other settings is included in the point 9.11 *Additional weighing parameters.*

25.3. Control

Before the procedure start, select the product of your interest from the product base. To do so, use a quick-access key: <Product>. After selecting the product, you can initiate the control procedure. To do so, press ▶ key in the lower bar of the screen. The program will automatically display the box with keyboard that you can use to enter the batch number applicable to the product in question, if such an option is enabled. After entering the batch number and accepting it, the program proceeds and shows further steps.
During the control, the program analyses measurement results on an ongoing basis and displays them in relevant fields of the screen to inform the operator about control results.

Messages displayed during control:

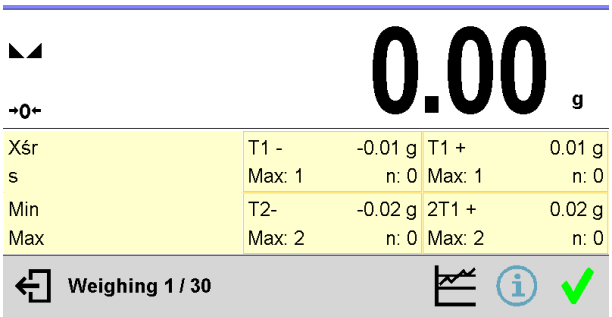

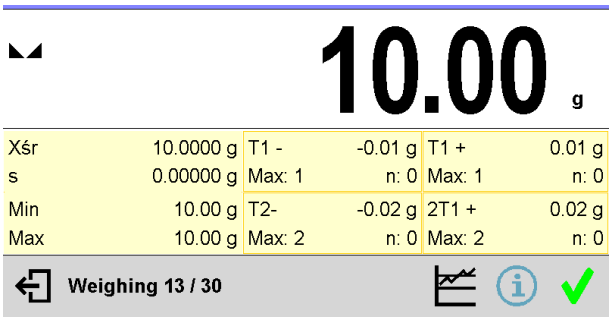

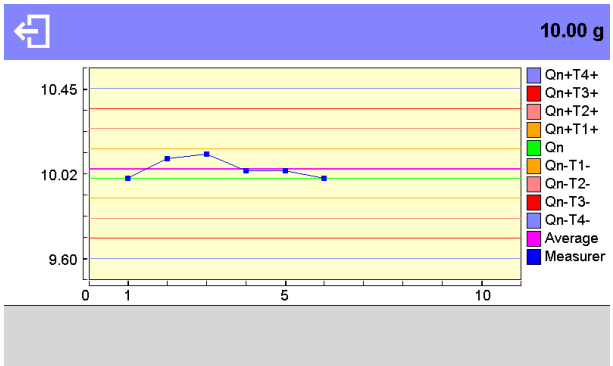

xśr	-	Average mass of the product in question.
s	-	Standard deviation for weighed samples
Min	-	Minimum mass of weighed samples
Max	-	Maximum mass of weighed samples
T1-	-	Nature of **T1-** negative errors – in sample: **-0,100g** – value of **T1-** negative error, **Max –** disqualifying quantity of **T1-** negative errors, **n –** real number of **T1-** negative errors**.**
T2-	-	Nature of **T2-** negative errors – in sample: **-0,200g** – value of **T2-** negative error, **Max –** disqualifying quantity of **T2-** negative errors, **n –** real number of **T2-** negative errors**.**
T1+	-	Nature of **T1+** negative errors – in sample: **-0,50g** – value of **T1+** negative error, **Max –** disqualifying quantity of **T1+** negative errors, **n –** real number of **T1+** negative errors**.**
T2+	-	Nature of **T2+** negative errors – in sample: **-0,100g** – value of **T2+** negative error, **Max –** disqualifying quantity of **T2+** negative errors, **n –** real number of **T2+** negative errors**.**
Weighing 1/10	-	Command related to the course of the procedure.
	-	Change of working area: numerical data/diagram.
	-	Control and measurement result information key.
	-	Measurement approval.
	-	End of control.

Control status

The control status is supplied with a relevant graphic interpretation (background colour) that informs you about exceeded limit values of error quantity. Values and quantities of errors are entered by the operator for the test product.

T1+ : 0.050 g Max: 3 n: 2	- orange colour is a warning – emergence of another **T1+** error will cause the control result to be negative,
T2+ : 0.100 g Max: 1 n: 2	- red colour is a warning – **T2+** error has emerged and caused the control result to be negative.

After the end of the control, a summary (report) is generated, and the control is automatically saved in the balance database.

Note: *The template and example of the control report is described in the point 25.4 of the manual.*

25.4. Product control report

The example of the SQC control report.

Report number S/22/11/2021/11/11

Type of balance	*AS xx*
Maximum range	*220 g*
Balance weighing interval	*0.001 g*
Balance ID	*123*
Start date	*22.11.2021 11:09:47*
End date	*22.11.2021 11:11:03*
Operator	*Admin*
First and last name	*BBB CCC*
Product	*AAA*
Density	*1.000 g/cm3*
Batch number	*XX111*
Nominal mass	*0.700 g*
Tare	*0.000 g*
Error value [T4-]	*0.400 g*
Error value [T3-]	*0.300 g*
Error value [T2-]	*0.200 g*
Error value [T1-]	*0.100 g*
Error value [T1+]	*0.050 g*
Error value [T2+]	*0.100 g*
Error value [T3+]	*0.150 g*
Error value [T4+]	*0.200 g*
Batch quantity	*100*
Number of measurements	*10*
Number of errors [T4-]	*0*
Number of errors [T3-]	*0*
Number of errors [T2-]	*0*
Number of errors [T1-]	*0*
Number of errors [T1+]	*2*
Number of errors [T2+]	*1*
Number of errors [T3+]	*1*
Number of errors [T4+]	*0*
Statistics	
Min	*0.658 g*
Max	*0.874 g*
Dispersion	*0.216 g*
Average	*0.73500 g*

Total 7.350 g
Standard deviation 0.079 g
RDVP 10.747 %
SQC mode Full
Method SQC

Result Positive

Measurements
1. 0.874 g
2. 0.812 g
3. 0.659 g
4. 0.703 g
5. 0.659 g
6. 0.799 g
7. 0.658 g
8. 0.798 g
9. 0.672 g
10. 0.716 g
Tare: Statistics
Tare: Min 0.000 g
Tare: Max 0.000 g
Tare: Average 0.000 g
Tare: Standard deviation 0.000 g
Tare: Total 0.000 g
Tare: Measurements
1. 0.000 g
2. 0.000 g
3. 0.000 g
4. 0.000 g
5. 0.000 g
6. 0.000 g
7. 0.000 g
8. 0.000 g
9. 0.000 g
10. 0.000 g

Signature

.....

Report template:
The balance operator can edit the product control report template in the **<Printouts/SQC report printout template>** submenu. Variables which the <Yes> value has been set for will be printed out.

26. PACKAGED GOODS CONTROL

(function disabled for standard balance models)

<PGC> is a working mode enabling performance of packaged goods control (single stand control or multi-stand control), basis of which is a database containing products and operators. The control initiated using balance ends automatically after a pre-set package quantity (samples) has been controlled.
Balances may connect to **E2R SYSTEM** software and form a multi-stand system (network). Each balance is an independent workstation, and information regarding the course of control is sent to the computer program in real time. The computer software enables collecting real-time data from each connected scale. The system enables control start using either balance or computer software.

Collected data allows to assess the quality of packaged products and their conformity with:

- PGC regulation of 7th May 2009 on packaged goods (Journal of Laws. No. 91 item 740), 76/211/EEC directive and WELMEC 6.4 guide (law-regulated control),
- the company's quality control system (internal audit).

Control process:

- operator selection,
- product selection,
- control start,
- download of weighings,
- control finish (carried out automatically when predefined number of packages is weighed),
- control report print.

Caution: *For detailed information on establishing a connection with* ***<E2R System>*** *read section 'COMPUTER'.*

26.1. Pgc mode start-up

Procedure:

Go to the home screen, press Ważenie pictogram located in the top bar. <**Working modes**> submenu is opened. Select **<PGC>** mode, Prepacked Goods Controls home screen is displayed.

- Message: '**Start control'** is visible in the bottom bar along with control start button, , press it to start the control.

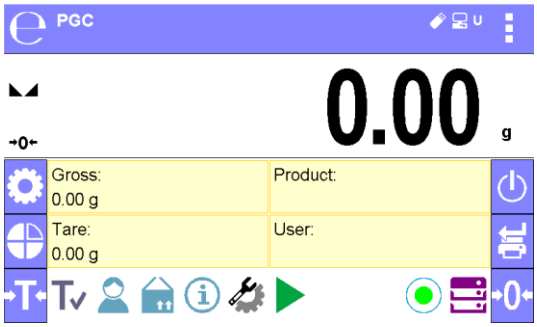

26.2. Control settings

Caution:
Prior to entering control settings window, carry out logging procedure, to do it read LOGGING section of this user manual.

Press button located in **<PGC>** mode's home screen, window with control settings is displayed:

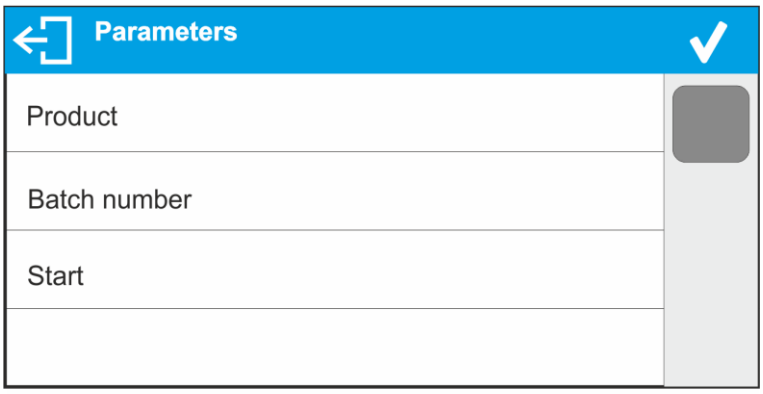

Where:

Product	Press to select product from the database
Batch number	Batch number entry
Start	Press to start control process

26.3. Pgc mode local settings

Press button to access **<PGC>** mode local settings:

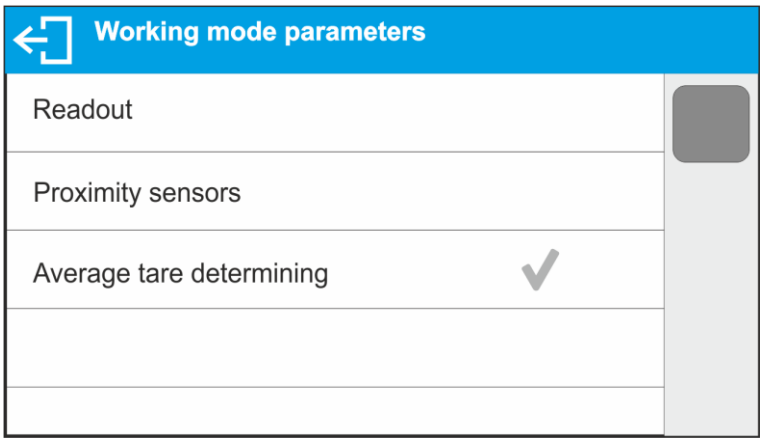

Readout	For detailed description read section: ***<WEIGHING> MODE SETTINGS - READOUT***
Proximity sensors	For detailed description read section: ***PROXIMITY SENSORS.***
Average tare determination	Press to switch on/off option of average tare determination before control start.
Print mode	Parameter determining operation mode. <When stable> - the result is accepted manually, this is done by pressing a pictogram located in the bottom bar. <Auto> - the operation proceeds in accordance with section 8.14.

26.4. Editing Product for Control Process

In order to edit a product, enter **<** / **Database>** submenu.

Caution:
*In the case of connection with **<E2R System>** software, databases editing on the balance is disabled. Editing and export of the products to the balance is carried out using computer software.*

Procedure:

- Enter **<** **>** submenu.
- Enter **<Products>** database and press respective record.

Control data:

Parameter	Description
Name	Product name.
Code	Product code.
EAN	Product EAN code.
Mass	Product nominal mass.
Tare	Product tare value (set automatically while selecting a product from the database).
PGC mode	Control type: Non-destructive average tare, Non-Destructive Empty–Full, Destructive Full–Empty, Destructive Empty–Full.
Batch portion	Measurement series for control: Non-destructive Empty-Full, Destructive Full-Empty, Destructive Empty-Full.
PGC unit	Unit of a product: [g] or [ml].
Batch quantity	Declaring quantity of controlled batch.
Interval of average tare determination	Time interval given in [h] determining how often average tare must be estimated for a given product.
Packaging quantity	Declaring quantity of packages that are to be subjected to process of average tare determination (for Non-destructive average tare control).
Average tare coefficient	Coefficient of standard deviation acceptance threshold for average tare. Coefficient range: 0.10 - 0.25.
Density	Product density (value range: 0.1g/cm^3 - 5g/cm^3).
Internal control	Submenu with parameters for defining the criteria of an internal control (see the below table).

- **List of parameters defined for internal criteria:**

Internal control	Values: <YES> - enable internal control criteria, <NO> - disable internal control criteria.
Sample quantity	Value of product sample quantity.
[T1-] error value	Max permissible value of **T1-** error, given in mass unit set for a product. Measurement values lower than **Qn-[T1-]** value are considered to be incorrect.
[T1+] error value	Max permissible value of **T1+** error, given in mass unit set for a product. Measurement values higher than **Qn+[T1+]** value are considered to be incorrect.
Disqualifying quantity of samples Qn-[2T1-]	Number of negative errors **2T1-** in tested sample that disqualify the control.
Disqualifying quantity of samples Qn-[T1-]	Number of negative errors **T1-** in a tested sample that disqualify the control.
Disqualifying quantity of samples Qn+ [T1+]	Number of positive errors **T1+** in a tested sample that disqualify the control.
Disqualifying quantity of samples Qn+ [2T1+]	Number of positive errors **2T1+** in a tested sample that disqualify the control.
Average limit	Mode for calculating the average limit value (constant or automatic).
Average limit [-]	Average limit value (negative) for a tested sample (value of average limit as 'constant').
Average limit [+]	Average limit value (positive) for a tested sample (value of average limit as 'constant').
Coefficient value [-Wk]	Multiplier of standard deviation for value of average limit (minus) calculated automatically.
Coefficient value [+Wk]	Multiplier of standard deviation for value of average limit (plus) calculated automatically.

Apart from the above listed options there are other ones which may be used for different working modes (e.g. CHECKWEIGHING - Min, Max, etc.)

26.5. Control start procedure

In order to activate PGC mode you ned to be assigned with

- permission level required for carrying out control process.

  Caution:
  For information on logging and instruction on how to grant permission levels read section about logging.

- Select product with correctly entered control data.

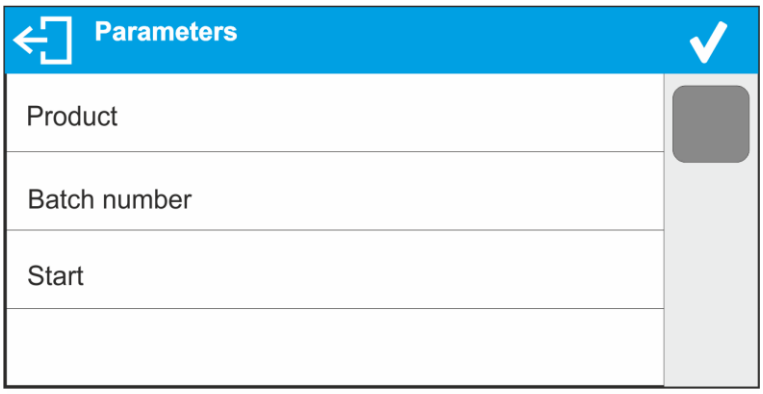

- Set weighing mode parameters.

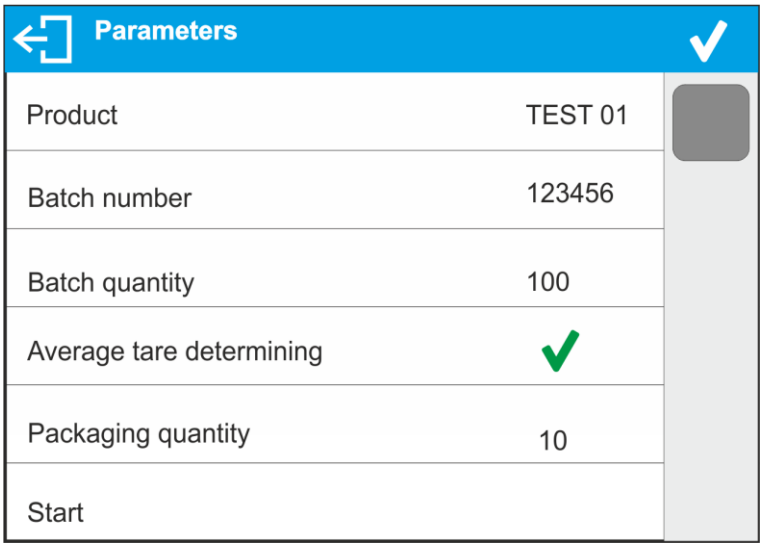

  - Batch number – for controlled product batch identification.
  - Bach quantity – reference number on the basis of which the software takes specified quantity of samples for control.
  - Average tare determining option
  - Packages quantity – no less than 10.
- Remove load from the weighing pan.
- Press <START > button located in the bottom. The home screen containing entered data is displayed.

Caution: *If prior to control:*

- *the load has not been removed from the weighing pan or if other zeroing requirements have not been met (e.g. unstable indication), message:* ***<-Err 2>*** *is displayed. Upon noticing* ***<-Err 2>*** *message unload the balance and wait until all zeroing requirements are met.*
- *you have not logged in or you are logged but not assigned with the right permissions to perform control, message:* ***<Access denied>*** *is displayed.*
- *you have not selected product from the database, message:* ***<Product is not selected>*** *is displayed.*

26.6. Control abort procedure

The control can be aborted at any time, it is done by pressing a ‘control stop’ function button, .
Pressing of ‘control stop’ function button, , results with display of the following box:

Press button to return to the ongoing control. Press button to abort the control and return to **PGC** mode. In the second case in **<Control reports>** database a control report with **<Terminated>** status is saved.

26.7. Aborted control restoring, power loss case

In the case of disconnection from the mains, to prevent loss of data for the control in progress, the program continuously records control results.
For power loss case, the software allows to complete aborted control upon reconnection to the mains.

Caution:
Remember to restart the balance when unloaded. It is obligatory to run the balance with an empty weighing pan.

During balance restart the software searches for any in-course control procedure. If there is one, the following message is displayed:

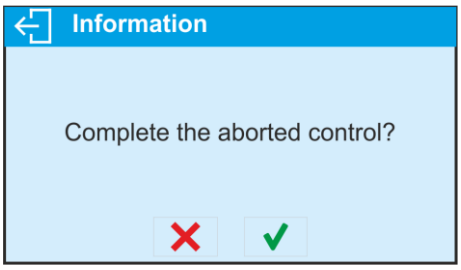

Press button to leave control procedure and proceed to weighing. Press button to complete aborted control procedure.

26.8. Non-destructive average tare control

Prior to control you can determine average tare by package weighing.
Procedure:
Go to **Settings** window of **PGC** mode. Activate <**Average Tare Determining**> function, to do it press grey field.

During tare control the following window is displayed:

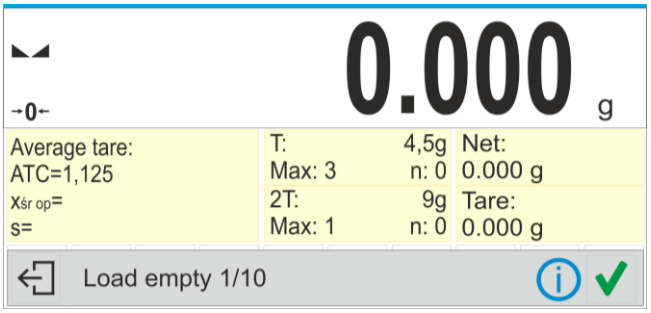

Where:

0.25T	-	**0.25T** criterion value in [g].
$X_{śr\ op}$	-	Average packaging mass in [g].
s	-	Standard deviation.
T	-	Characteristics of negative **T1** errors in a sample.
2T	-	Characteristics of negative **2T1** errors in a sample.
Net	-	Net weight of controlled packaging.
Tare	-	Packaging tare.
Load empty	-	Prompt regarding the process course. Command specifying number of all measurements to be done for a given batch.
ⓘ	-	Information on control.
✓	-	Measurement confirmation.
⇦	-	Control end.

Caution:
If a product is to be controlled by **"Non-destructive average tare"** mode, *then accordingly to Regulation, standard deviation* ***"S"*** *for its packaging mass, based on at least* ***10*** *measurements, cannot be lower than* ***0.1*** *and greater than* ***0.25*** *of maximum permissible negative* ***T*** *error, for nominal packaging mass. The range is set independently for each product in products database.*

Upon measurement of the last packaging mass, the summary of the process is displayed and the report is automatically saved to the scale database:

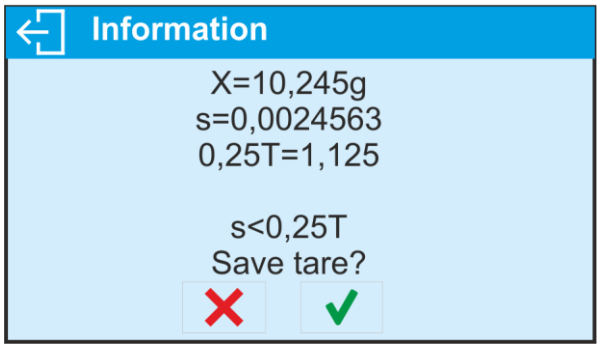

Press button to proceed to control without saving the newly estimated average packaging mass to product record, and to adopt the value that was assigned to the product in a database.
Press button to proceed to control with saving the newly estimated average packaging mass to product record and to adopt this value in the course of a current control.
During control, the measurement results are analysed in real time, and displayed in respective fields:

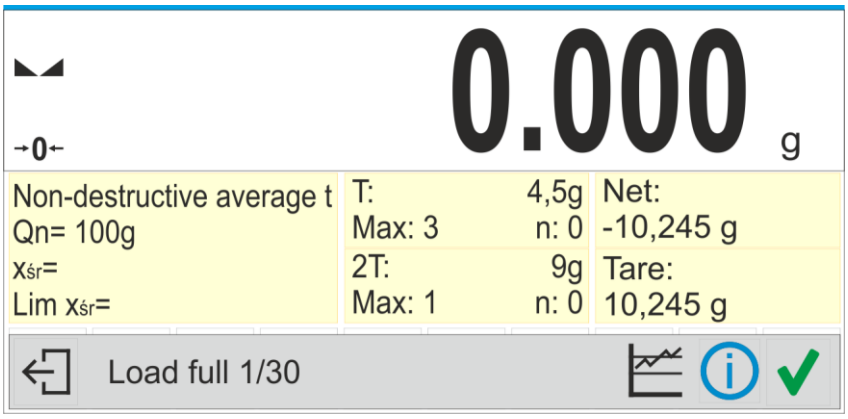

Where:

Q_n	-	Nominal value of the controlled product.
$x_{śr}$	-	Average mass of the controlled product.
Lim $_{xśr}$	-	Disqualifying average value.
T	-	Characteristics of sample's negative **T** errors: **-4,5g** - value of negative **T** error, **Max** - disqualifying quantity of negative errors **T**, **n** - real quantity of negative **T** errors.
2T	-	Characteristics of negative **2T** errors in a sample. **-9g** - value of negative **2T** error, **Max** - disqualifying quantity of negative errors **2T**, **n** - real quantity of negative **2T** errors.
Net	-	Net weight of the controlled product.
Tare	-	Packaging tare.
Load full	-	Prompt regarding the process course. Command specifying number of all measurements to be done for a given batch.
	-	Workspace content change (numeric data vs graph)
	-	Information on control / results of performed control.
	-	Measurement confirmation.
	-	Control end.

- **Control status**
  Graphic interpretation of the control status:

- **positive**, standard display colours

- negative (control of sample 2 permitted),

In the case of status: <**negative - control of sample 2 permitted**>), colour of the respective workspace, for which permissible values are exceeded, turns to orange:

Orange warns that occurrence of another **T** error will end with negative result of the control.

- **negative**.

In the case of status: <**negative**>, colour of the respective workspace, for which permissible values are exceeded, turns to red:

Average mass of the controlled product lower than the value of disqualifying average.

- **Workspace content change**

  To enable display of the measurement results in a form of graph, press button:

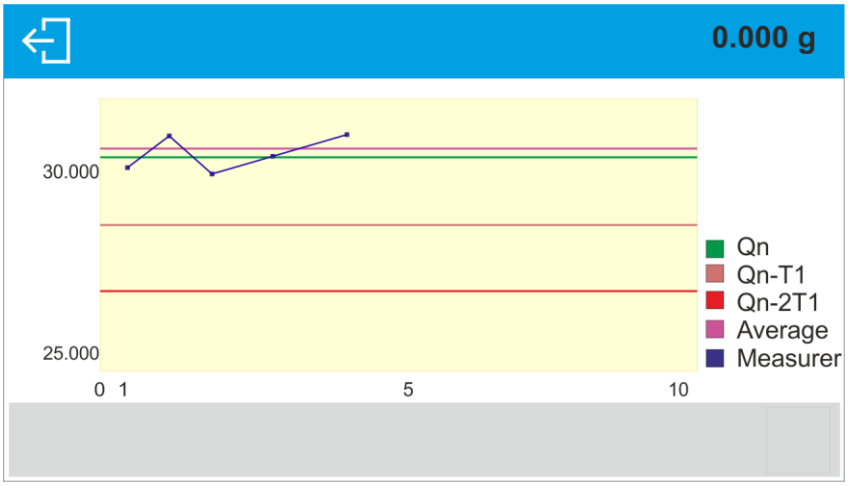

To disable the graph, press button.

- **Information on the control process**

Press button to display window with information on control settings:

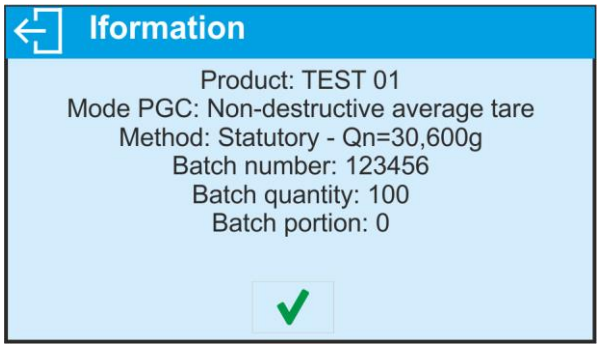

Control in-progress window:

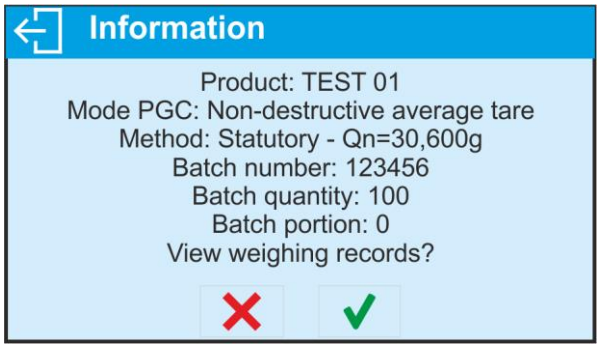

Press button to display window with measurements carried out for an ongoing control:

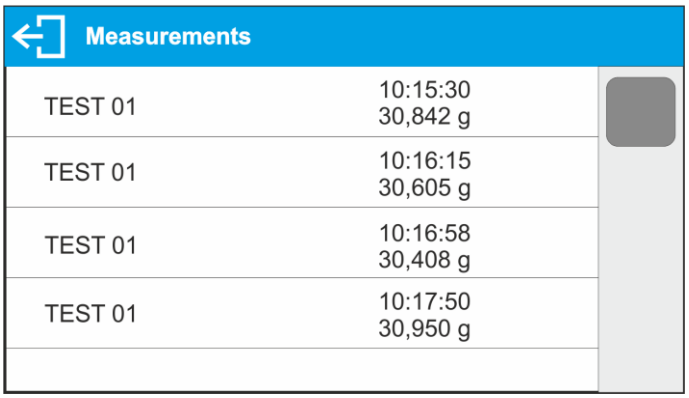

Upon control completion, summary of the process is generated, control is automatically saved to the database:

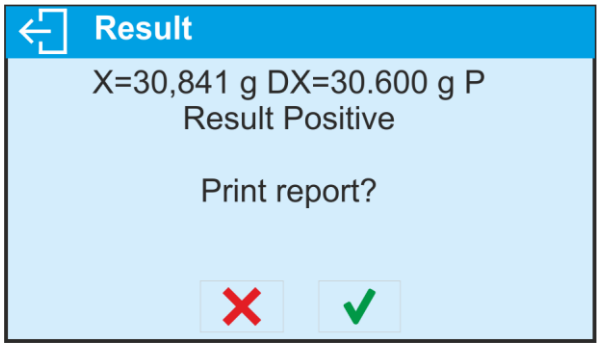

Press button to print report using a connected printer. Press button to return to **<PGC>** mode settings without report printing.

Caution:
*In the case of connection with **<E2R System>** software, the control process summary lacks query regarding report. All data is automatically sent to the computer software, the report may be printed using a computer.*

Shall the quantity of negative **T** errors, detected by the software during the control of sample 1, require (as specified by the regulation on PGC) sample 2 to be controlled, then upon sample 1 measurement completion, the following message is displayed:

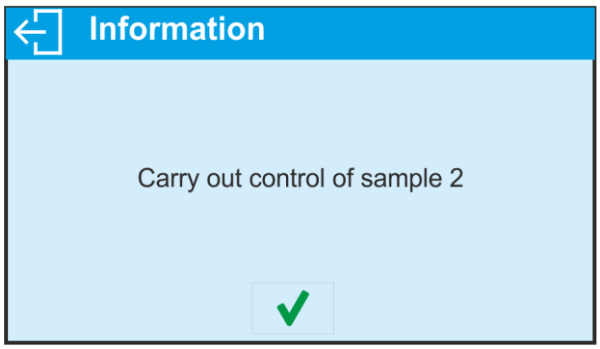

Press button to confirm, descriptions and quantity of permissible errors in control box change. Upon completed control of sample 2 the program summary of the process is generated, and the report can be printed on a scale-connected printer.
Caution:
The template and examples of the average tare determination and PGC reports are to be found further down this user manual.

26.9. Non-destructive empty-full control

Non-destructive Empty-Full control requires setting of **batch portion**, the value must be set is product data. A message asking you to weigh empty packages first, full next, in the same order, is displayed.

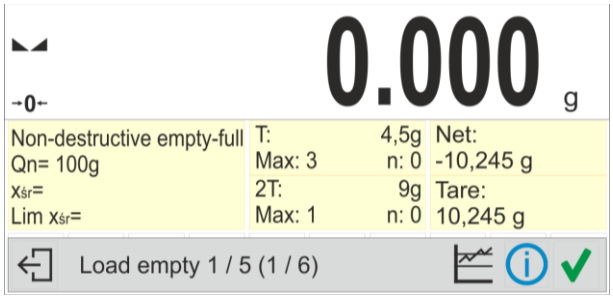

Where:

T	-	Characteristics of sample's negative **T** errors: **-4,5g** - value of negative **T** error, **Max** - disqualifying quantity of negative errors **T**, **n** - real quantity of negative **T** errors.
2T	-	Characteristics of negative **2T** errors in a sample. **-9g** - value of negative **2T** error, **Max** - disqualifying quantity of negative errors **2T**, **n** - real quantity of negative **2T** errors.
Net	-	Net weight of the controlled product.
Tare	-	Packaging tare.
Load full	-	Prompt regarding the process course. 1 / 5 – measurements in a batch portion, batch portion takes 5 pcs (1 / 6) – number of batch portions within the whole test
	-	Workspace content change (numeric data vs graph)
	-	Information on control / results of performed control.
	-	Measurement confirmation.
	-	Control end.

Caution:
It is necessary to keep the same weighing order when weighing a product with packaging and when weighing empty packaging. With this, software correctly calculates mass of a load placed in its corresponding packaging.

Upon control completion, a report is generated, control is automatically saved to database.

Caution: *The template and an example of control report are to be found further down this user manual.*

26.10. Destructive Empty-Full and Full-Empty Control

In the case of **Destructive** control of lot exceeding 100 pcs, sample set by the software for a test takes always 20 pcs. The other control assessing criteria are set in accordance with the law regulations.
Procedure:
Select product from the list, set parameters for destructive control and determine **batch portion** value.
Start destructive control; prompts helping you to go through control process are displayed (as in the case of the controls described above).
Depending on the selected control mode, a respective sequence of weighing is given: **Empty-Full** or **Full-Empty**.

Caution:
It is necessary to keep the same weighing order when weighing a product with packaging and when weighing empty packaging. With this, software correctly calculates mass of a load placed in its corresponding packaging.

Upon control completion, summary of the process is generated, control is automatically saved to database.

Caution: *The template and an example of control report is to be found further down this user manual.*

26.11. Control Accordant with Internal Criteria

Select appropriate product with control data entered correctly in accordance with internal criteria (see: previous sections of this user manual).
Enter PGC mode parameters into balance memory (do it following the instruction). Press <Start> entry, located in the bottom, to start the control.
During control, the measurement results are analysed in real time, and displayed in respective fields:

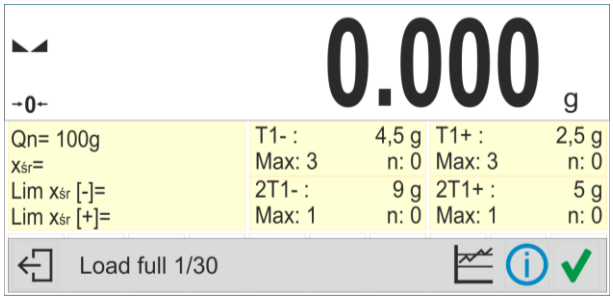

Where:

Qn	-	Nominal value of the controlled product.
xśr	-	Average mass of the controlled product.
Lim xśr [-]	-	Negative disqualifying average value.
Lim xśr [+]	-	Positive disqualifying average value.
T1-	-	Characteristics of negative errors **T1-** in a sample: **-4.5g** - value of negative error **T1-**, **Max** - disqualifying quantity of negative errors **T1-**, **n** - actual quantity of negative errors **T1-**
2T1-	-	Characteristics of negative **2T1-** errors in a sample. **-9g** - value of negative error **2T1-**, **Max** - disqualifying quantity of negative errors **2T1-**, **n** - actual quantity of negative errors **2T1-**
T1+	-	Characteristics of positive errors **T1+** in a sample: **2,5g** - value of positive error **T1+**, **Max** - disqualifying quantity of positive errors **T1+**, **n** - actual quantity of positive errors **T1+**
2T1+	-	Characteristics of positive errors **2T1+** in a sample: **5g** - value of positive error **2T1+**, **Max** - disqualifying quantity of positive errors **2T1+**, **n** - actual quantity of positive errors **2T1+**
Load full 1/30	-	Command regarding process course.
	-	Workspace content change (numeric data vs graph).
	-	Information on control and results of performed control.
	-	Measurement confirmation.
	-	Control end.

Upon control completion, a report is generated, control is automatically saved to a database.

Caution: *The template and example of the control report are to be found further down this user manual.*

26.12. Reports

A report on determination of an average tare value	*A report on product control*
Report no. U/07/05/21/13/37/T Balance type PS X7 Range 250.000 g Reading unit 0.001 g Balance S/N 303 Date 2021.05.07 13:37:30 Product product 1 Tare 33.447 g Average tare coefficient 0.25 Average tare limit 1.125 g Measurement quantity 10 Standard deviation 0.00483 g Method Statutory Result Positive Measurements 1. 33.440 g 2. 33.440 g 3. 33.440 g 4. 33.450 g 5. 33.450 g 6. 33.450 g 7. 33.450 g 8. 33.450 g 9. 33.450 g 10. 33.450 g ---------- Signature	Report no. U/06/05/21/14/17 Balance type PS X7 Range 250.000 g Reading unit 0.001 g Balance S/N 303 Start date 2021.05.06 14:15:49 End date 2021.05.06 14:17:04 Operator AAAAAA Product product 1 Batch number 99 Nominal mass 100 g Tare 33.447 g T1 error value 4.5 g T2 error value 9 g Batch quantity 500 Measurement quantity 30 T1 errors quantity 0 T2 errors quantity 0 Min 98.579 g Max 100.020 g Average 99.72983 g Sum 2991.895 g Average limit [-] 99.70685 g Average limit [+] g Standard deviation 0.582804 g PGC mode Non-destructive average tare Method Statutory Result Positive Measurements 1. 100.008 g 2. 98.579 g 3. 98.582 g . 30. 100.012 g ---------- Signature .....
Report example: You can edit a template of a report on product control. To do it enter **<Printouts/ Average tare report printout template>** section. Only variables with <YES> attribute are printed on a report.	**Report example:** You can edit a template of a report on product control. To do it enter **<Printouts/ PGC report printout template>** section. Only variables with <YES> attribute are printed on a report. In this submenu you can determine whether measurements are to be printed. **<Printouts/ <GLP printout>** submenu enables to determine printout content.

27. DATABASES

Balance software features the following databases <>:
Products (5 000 products)
Users (100 users)
Packaging (100 packaging types)
Customers (1 000 customers)
Formulations (100 formulations consisting of 25 ingredients maximally)
Formulations reports (500 reports)
Ambient Conditions (10 000 records)
Weighings (50 000 records)
Alibi (512 000 records)
Control reports (1000 reports) – *database enabled for balances with PGC function exclusively*
Average tares (1000 reports) – *database enabled for balances with PGC function exclusively*

CAUTION!
It is not possible to edit some of the databases for a balance cooperating with E2R software. Shall you introduce any modifications on databases, use the PC software.

27.1. Database connected operations

The program enables the user with appropriate access level to carry out the following operations: adding new record, exporting data from databases, importing data to databases, deleting one record from the database, deleting all records from database, printing data saved in a record.

ADD NEW RECORD
Procedure:

- Enter a database and press + (Add) button located in the top bar.
- Define fields for the new record (data content depends on the database).
- On returning to the databases window a new record is displayed on the list.

EXPORT
Procedure:

- Insert USB flash drive.
- Open the database that is to be exported.
- Press icon located in the top bar.
- The program automatically saves exported data to a USB flash drive file, respective prompts are displayed for confirmation of sucsessfully completed operation.
- The name of a file depends on the database.

Database	***File name and extension***
Operators database	users.x2
Products database	products.x2
Packaging database	packaging.x2
Customers database	customers.x2
Formulations database	formulas.x2
Non-standard printouts	non_standard_printouts.x2

IMPORT
Procedure:

- Save the file with database content that is to be imported to a flash drive. Only files exported from other balance that have proper names and extensions can be imported – see table above.
- Insert USB flash drive.
- Enter database that is to be imported.
- Press icon located in the top bar.
- The program automatically reads the file and the data is imported to the balance. Respective prompts are displayed for confirmation of sucsessfully completed operation.

EXPORTING THE SPECIFIC REPORT OR REPORT BASE IN THE FORM OF A TXT FILE
To save data on the pendrive, follow the steps below:

- Insert the pendrive external memory stick into the USB port
- Enter the report base or specific weighing or report, etc. that is to be saved
- Press icon in the top bar
- The program will save the data as a *.txt file on the pendrive

DELETE A RECORD
Procedure:

- Press the record and hold it.
- A message: <Confirm to delete> is displayed.
- Press < > to confirm, the record is deleted from the list.

DELETE A DATABASE
Procedure:

- Enter selected database and press (Delete everything) pictogram located in the top bar.
- A message: <Confirm to delete all records> is displayed.
- Press < > to confirm, the database is deleted.

SEARCH ENTRY BY NAME
Procedure:

- Enter database, press N pictogram located in the top bar.
- An edit box for entering the name is displayed (the program distinguishes upper and lower case letters), press button to confirm.
- All entries containing entered name are displayed.
- Select an entry.

SEARCH ENTRY BY CODE
Procedure:

- Enter database, press C pictogram located in the top bar.
- An edit box for entering the code is displayed (the program distinguishes upper and lower case letters), press button to confirm.
- All entries containing entered code are displayed.
- Select an entry.

FORMULATIONS REPORTS, WEIGHING REPORTS and ALIBII cannot be imported. ALIBII database cannot be deleted. The databases content can only be exported and saved to a flash drive. Names of files with exported data consist of serial number and proper extension (see table below).

Database	***File name and extension***
Formulations Reports	123456.for
Weighing Reports	123456.wei
Alibii	123456.ali

Files can be read using ALIBI Reader by RADWAG that can be downloaded from the website: www.radwag.pl.

AMBIENT CONDITIONS database serves informative purposes only. Using records preview option you can check ambient conditions and observe how they changed over time. The data saved to records can be printed by pressing pictogram located in the top bar. Records' names contain date and time of saving the record's data to balance memory.

27.2. Products

Product database stores names of all products that can be weighed, counted, controlled.

Procedure:

- Enter <Databases> submenu, press <Products> key.
- Press < Add> key for adding a new product.
- For operating an already introduced product press the product field.

List of parameters defined for a product:

1. Name
2. Code [product code]
3. EAN [EAN code for a product]
4. Mass [nominal mass/single product mass]
5. Tare [tare value, set automatically when the product is selected out of the database]
6. Min [low limit for product weighing in CHECKWEIGHING mode]
7. Max [high limit for product weighing in CHECKWEIGHING mode]
8. Tolerance [% value calculated in relation to mass, the parameter determines measuring area for which the measurement is recognized as correct for DOSING mode.]

CAUTION!
Remember to assign product to particular mode, as some of data values are adopted to the particular mode functions, e.g. mass in <Percent Weighing> mode is accepted as reference mass, whereas mass in <Parts Counting> mode is accepted as single part mass. When a particular product is used for different modes then its weight, taken from product data, is associated with different data for these modes.

27.3. Operators

Users database features list of operators permissioned to operate the balance.

List of parameters defined for a user:

1. Name
2. Code
3. Password
4. Permissions level
5. Language

Adding a new operator – operation to be carried out by an Administrator exclusively. In order to add a new user:

- enter Operators menu and press < Add> key,
- fill in the new record fields,
- return to window displaying operators list, the new record has been added.

Editing information relating to an operator:

- press selected operator name,
- the selected operator parameters are displayed,
- select data that is to be modified, introduce changes.

Deleting an operator - operation to be carried out by an Administrator exclusively. In order to delete a user:

- press and hold selected user,
- message <Confirm to delete> is displayed,
- press < > key,
- selected user is deleted.

27.4. Packaging

List of used packaging with parameters such as name, code and weight value specified. When carrying out weighing process, upon selection of particular packaging, a respective tare value is operated automatically. The tare value is displayed with minus sign.

Procedure:

- Enter <Databases> menu, press <Packaging> key,
- Press < Add> key for adding new packaging,
- For operating already introduced packaging press the packaging field, fill in respective data.

List of parameters defined for packaging:

1. Name
2. Code [internal code providing packaging identification]
3. Tare [packaging weight]

27.5. Customers

Customers database features a list of names of customers for whom the measurements are carried out.

Procedure:

- Enter <Databases> menu, press <Customers> key,
- Press < Add> button for adding a new customer,
- For operating an already introduced customer, press the customer field, fill in respective data.

List of parameters defined for a customer:

1. Name
2. Code [internal code providing customer identification]
3. VAT no. [tax identification no.]
4. Address
5. Postal code
6. City

27.6. Formulations

Formulations database contains all added formulations. They can be carried out automatically.

Procedure:

- Enter <Databases> submenu, press <Formulations> key,
- Press < Add> button to design a new formulation, or
- Select already existing formulation button and press it,

List of parameters defined for a formulation:

1. Name
2. Code
3. Ingredients
4. Target value

27.7. Formulations reports

Reports on formulations database stores information on carried out formulations. Each report can be previewed and printed.

Procedure:

- Enter <Databases> submenu, press <Formulation Reports> key,
- Select particular report button out of the list, use scroll buttons to find the report you need,
- Report's name consists of date and time of its creation, e.g.: 2011.10.12 15:12:15.

Information provided by the Formulation Report:

- User
- Formulation
- Start date
- End date
- Ingredients quantity
- Measurements
- Sum
- Target value
- Difference
- Status

27.8. Ambient conditions

Ambient Conditions database comprises ambient conditions related information. Depending on the setup, the ambient conditions record may comprise data such as temperature, humidity, atmospheric pressure. When the THB module is connected to the balance then its indications are recorded to the database too.

Procedure:

- Enter <Databases> submenu, press <Ambient conditions> key.
- Press the required record, if not visible scroll the records list down.
- Record name comprises date and time.
- In order to print the record press printer pictogram

CAUTION!
The software saves ambient conditions record in a so called loop, i.e. when the measurement 10 001 is saved, the measurement 1 is automatically deleted from the balance's memory. **Records saved to balance memory cannot be deleted.**

27.9. Weighing records

Each measurement result sent from a balance to a printer or a computer is saved in the database of weighing records. Balance user can preview data from each weighing record.

Procedure:

- Enter <Databases> submenu.
- Enter <Weighing records> database and press selected record.

Information defined for a weighing record:

- Measurement date
- Measurement time
- Measurement result
- Weight
- Tare value

- User
- Product name
- Customer, Customer name
- Packaging, tare name applied during product measurement
- Working mode name
- Result control, information specifying within which threshold limit the obtained result is:
    - MIN – below min threshold (possible only if <Result control> is set to <NO> value)
    - OK – within min and max threshold,
    - MAX – above max threshold (possible only if <Result control> is set to <NO> value)
- Variable 1
- Variable 2
- Variable 3

27.10. Alibi

Each measurement result sent from a balance to a printer or a computer is saved in Alibi database. Balance user can preview data from each weighing record.

Procedure:

- Enter <Databases> submenu.
- Enter <Alibi> database and press selected record.

Information defined for a particular measurement recorded into a database:

- Measurement date
- Measurement time
- Measurement result
- Weight
- Tare value
- User
- Product name

27.11. Control reports

(database enabled for balances with PGC function exclusively)

Each product control carried out using PGC mode is sent to a printer or saved to <**Control reports**> database. Each control saved to the database features specific number assigned at the moment of control completion. Database can store 1000 control report records maximum.

Control number format
X / y y / M M / d d / H H / m m, where:

X - control type, values:
U – control regulated by the act,
Z – operator-terminated control,
W – control regulated by internal criteria for PGC mode,
yy - year of control end,
MM - month of control end,
dd - day of control end,
HH - hour of control end,
mm - minute of control end,

Procedure:

- Enter **<Databases**> submenu and press **<Control reports>** entry.
- Select report, if not visible, scroll the list using navigation buttons.

List of formulation reports data**:**

1. Batch number
2. Status
3. Start date
4. End date
5. Product
6. Operator
7. Average
8. Average limit [-]
9. Standard deviation
10. Batch quantity
11. Measurement quantity
12. Measurements
13. Method

27.12. Average tares

(database enabled for balances with PGC function exclusively)

Prior to start of **<Non-destructive average tare>** control it is possible to determine the average tare, the determination is done by packaging weighing. Each process is automatically saved to **<Average tares>** database. Each control saved to the database features specific number assigned at the moment of control completion.Database can store 1000 average tare report records maximum.

Control number format
X / y y / M M / d d / H H / m m / T, where:

X - control type, values:
U – control regulated by the act,
Z – operator-terminated control,
W – control regulated by internal criteria,
yy - year of control end,
MM - month of control end,
dd - day of control end,
HH - hour of control end,
mm - minute of control end,
T - control on average tare value determination.

You can preview data on each process of average tare value determination.

Procedure:

- Enter **<Databases**> submenu and press **<Control reports>** entry.
- Select report, if not visible, scroll the list using navigation buttons.

List of parameters defined for average tare:

1. Product
2. Status
3. Date
4. Tare
5. Standard deviation
6. Average tare coefficient
7. Measurement quantity
8. Measurements
9. Operator
10. Method

28. COMMUNICATION

COMMUNICATION menu is comprised within Parameters menu. It is accessed by pressing key. The balance can communicate with a peripheral device, wherein the communication is established via the following ports:

- COM 1 (RS232),
- COM 2 (RS232) (not in AS X7 balances),
- USB 1, type A
- USB 2, type B
- Ethernet,
- Wi-Fi.

The ports can be configured using <Communication> parameter group. To enter this submenu, press key, next press “Communication” key.

28.1. Rs 232 ports setting

Procedure:

- Select communication port <COM1> or <COM2> (not in AS X7 balances),
- Set appropriate values

The RS 232 ports enable the following setting of transmission parameters:

- Baud rate - 2400, 4800, 9600, 19200, 38400, 57600, 115200 bit/s
- Parity - None, Even, Odd

28.2. Ethernet port settings

Procedure:

Select < Ethernet> communication port, next set appropriate values:

- DHCP - Yes – No
- IP Address - 192.168.0.2
- Subnet mask - 255.255.255.0
- Default gate - 192.168.0.1

CAUTION!
Above settings serve information purposes only. Transmission parameters should be selected in accordance with the settings of customer’s local network.
Return to weighing mode and restart the device.

28.3. Wi-fi port settings

CAUTION!

1. *Make sure that transmission parameters are accordant for your local network settings,*
2. *For correct communication via Wi-Fi, set port parameter for computer to <WIFI> value: <PERIPHERALS/COMPUTER/PORT/WIFI>, next set the parameters as follows:*

Balance equipped with Wi-Fi module features a respective pictogram at the home screen in the top right-hand corner:

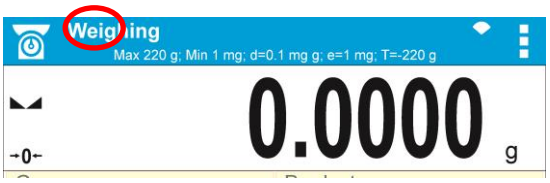

Pictogram for Wi-Fi network connection status:

No.	Pictogram	Overview
1		Balance connected, very strong signal
2		Balance connected, strong signal
3		Balance connected, poor signal
4		Balance connected, very poor signal
5		No connection (too poor signal or inaccessible selected network or invalid connection parameters – password, IP, etc.)

Exemplary settings for Wi-Fi port:

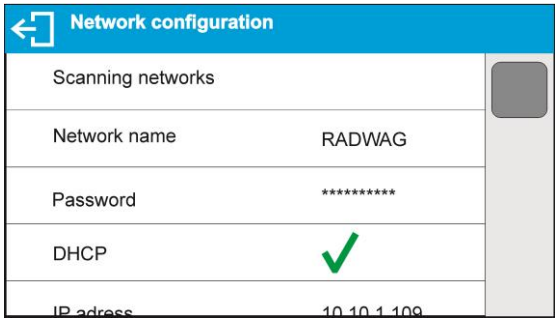

CAUTION!
The above presented settings serve informative purposes exclusively. Make sure that your transmission parameters are accordant for your local network settings.

Procedure:

- select <WIFI> communication port,

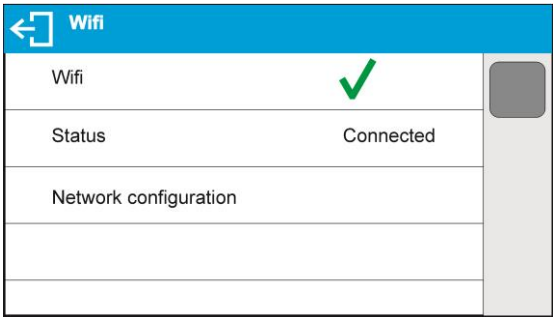

- enter <NETWORK CONFIGURATION> parameter and set DHCP parameter value:

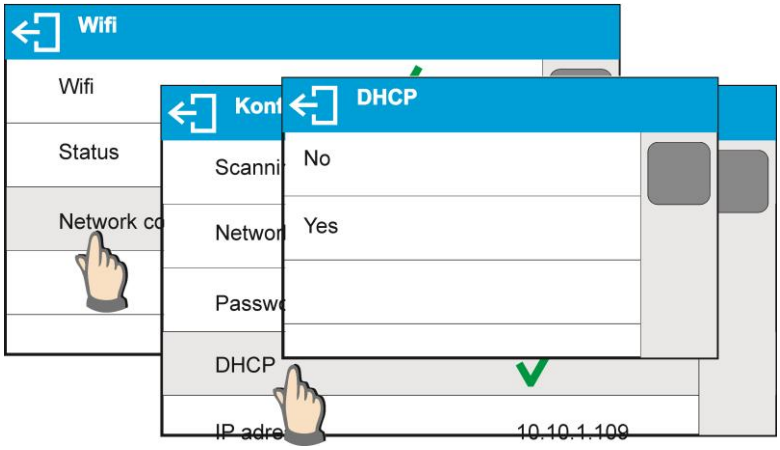

with DHCP set to NO value, enter manually IP; MASK; DEFAULT GATE parameters,

with DHCP set to YES value, the balance software automatically reads and displays data assigned by Wi-Fi router by means of which the balance is to be connected,

- enter <SCANNING NETWORKS> parameter and start network searching procedure, upon completion, list of detected networks is displayed along with information on signal strength and channel number,

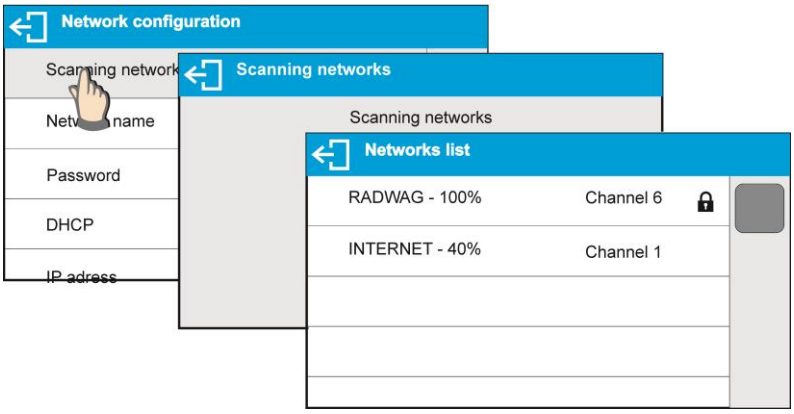

- select network of your choice,
- password window is displayed, using an on-screen keyboard enter the password,

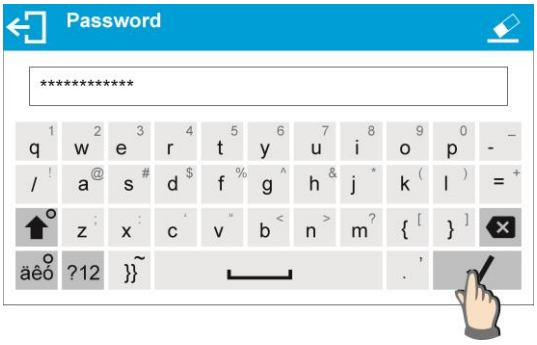

- <NETWORK CONFIGURATION> window is displayed, connection procedure starts automatically,
- Press button to go one level up, <STATUS> parameter features <CONNECTING> sign informing on the fact that the balance tries to connent the network,
- for successfully established connection <CONNECTING> status turns to <CONNENTED> status, respective pictogram is displayed (see pictogram overview above)
- if it takes too long to establish connection it may be concluded that connection parameters are invalid (password etc.), check the parameters and try to reestablish connection,
- if you fail to reestablish connection contact RADWAG service.

The selected network and parameters for connection are stored in the balance program. The program connects to the network using the stored parameters each time the balance is activated.

To disconnect the network turn the communication off:
COMMUNICATION/WIFI/WIFI – NO

28.4. Usb ports

USB port of type A is intended for:

- Connecting a USB flash drive storing <**FAT files system**>,
- Connecting balance to PCL printer,
- Connecting EPSON TM-T20 printer to USB port

USB flash drive may be used for printout of data on measurements (setting PRINTER/PORT parameter to PENDRIVE value). Measurement data printout operation is described in section 27 of this manual. Additionally, databases (*for description of this function go to section 25 Database Connected Operations*) and user's parameters settings can be copied balance to balance. On inserting USB flash drive an Export/Import group of parameters opens automatically. If you are authorized you can:
Export: databases, user's parameters
Import: databases, user's parameters
During export the program saves files with databases and parameters content on a flash drive. The exported data can be imported to any X7 series balance.

Please remember that for PCL printer the drivers print completely filled page, i.e. the page will be printed only upon pressing PRINT button, located on a balance, for several times (it depends on a printout size how many times the PRINT button shall be pressed prior printout).
It is possible to obtain printout upon pressing PRINT button once only, supposing that control code <0C> has been set as SUFIX (*for description of this function go to section 27 Printer*).

USB port of type B is intended for:

- Connecting balance to a PC computer

In order to make connection of balance and computer possible, it is necessary to install virtual COM port in a computer.
To carry out this procedure, you need a respective driver installer which may be either downloaded from website: *R SERIES RADWAG USB DRIVER x.x.x.exe* -

Steps:

1. Run driver installer

   Startup dialog window:

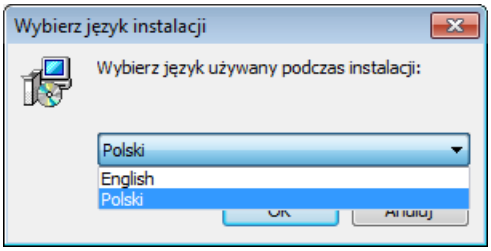

Select language version.

In order to continue, press „**Next**" button.

Window for target folder selection:

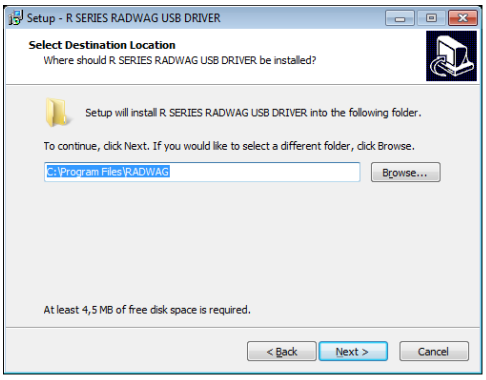

Select a respective folder and click **„Next”** key to proceed.

“Ready to Install” window:

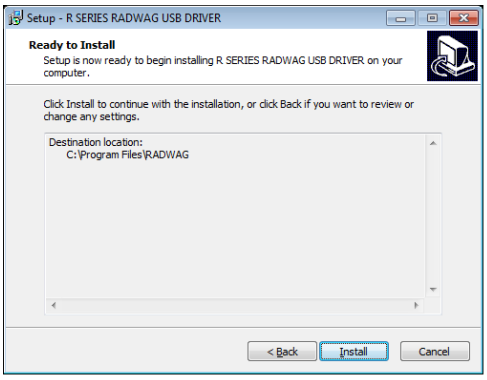

In order to run installation process, press „**Install**” key and clicking respective keys, follow the install wizard.

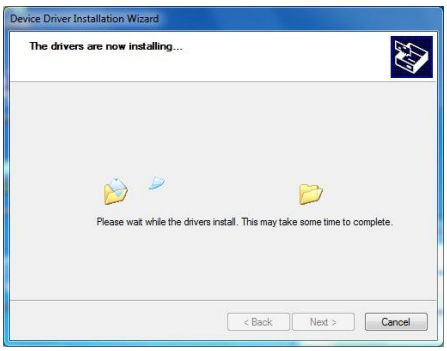

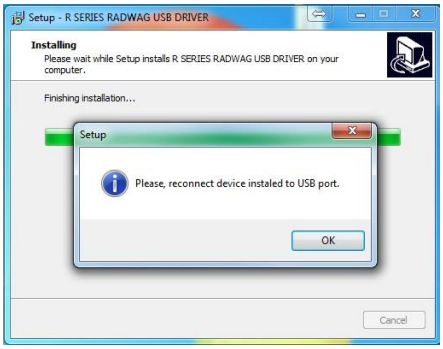

2.

Having completed driver installation, connect balance to a computer, use 1,8-meter long USB A/B cable maximally (in case of already connected balance, it is necessary to disconnect it and using USB cable connect the balance again).

3. The system detects the new USB device and automatically starts searching a respective driver

4.

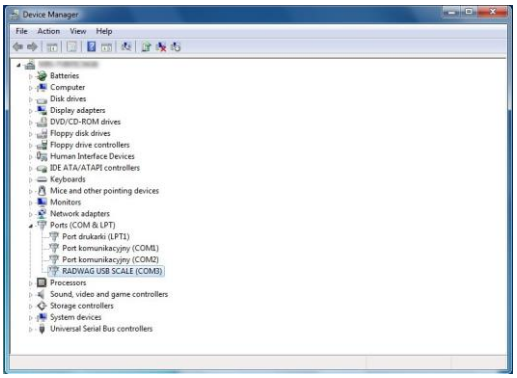

Go to Device Manager and check number assigned to virtual COM port.

For this very case it is STMicroelectronics Virtual COM Port (COM8).

5. Set balance parameters: select USB value for parameter COMPUTER/PORT.
6. Run software for measurement readout .
7. Use the program to set parameters for communication – select respective COM port (for the very case it is COM8), i.e. the one which has been formed while installing drivers.
8. Start cooperation.

29. PERIPHERAL DEVICES

PERIPHERAL DEVICES menu is comprised within Parameters menu. It is accessed by pressing key. The menu features list of devices that can cooperate with the balance.

29.1. Computer

Carry out configuration using <Computer> submenu.

Procedure:

- press key, next press: <Peripherals / Computer>
- set parameters related to cooperation with a computer
- select computer port
  - available options: none, COM 1, COM 2 *(not in AS X7 balances)*, USB, Ethernet, Wi-Fi, USB Free Link
    CAUTION: *In order to set USB Free Link instead of USB B, select any other port (e.g. none, COM1, etc.), and next select USB Free Link port. Analogously when changing USB Free Link to USB B.*

USB FREE LINK - USB port, type B, for connecting a computer. Tool for entering data, it functions as a keyboard. Upon proper modification of non-standard printout and sending proper command from the computer, or upon pressing ENTER key located on the operation panel, the data from non-standard printout is entered directly to computer programs, e.g. Excel, Word, Notepad etc.
Select <USB FREE LINK> port and configure its settings in order to enable correct cooperation of the balance with computer programs:

SPREADSHEET – value 'YES --.—' – cooperation with Excel type program, transferred decimal values are separated by dot (.)
– value 'YES --,--' – cooperation with Excel type program, transferred decimal values are separated by coma (,)
– value 'NO' – cooperation with other programs (mass value transferred in a form of text),

DELAY – if the transferred information is incomplete, i.e. part of it gets lost (due to auto-entering or auto-formatting of data by computer program) during cooperation with Excel type program, set the parameter value to <2>. If the transferred information is still incomplete, the parameter value must be higher. The value ranges between 0 (quick data transfer) and 9 (slow data transfer – around 10 characters per second).

In case of Free Link printout (keyboard emulator) all languages without special characters are operated ('QWERTY' keyboard layout), and two languages that feature special characters:

- Polish for 'Polish (Programmers) keyboard'. To enable support of this language go to printer settings on your balance and select Windows-1250 code page (Central European, Latin-2). The following Polish diacritical signs are added: ą, ć, ę, ł, ń, ó, ś, ż, ź.
- German for 'German (Germany) keyboard'. To enable support of this language go to printer settings on your balance and select Windows -1252 code page (Western European, Latin-1). The following German diacritical signs are added: ä, ö, ü, ß. The keyboard layout changes from 'QWERTY' to 'QWERTZ'. The characteristic feature of such keyboard is 'ß' sign located on the right side of the 'zero'.
- French for the 'French (France)' keyboard layout. In the balance, in printer settings, choose Windows-1252 code page (Western Europe, Latin-1). Special characters added: é, è, ç, à, ù. The keyboard layout changed into 'AZERTY'.

Caution!
Free Link printout option allows printing only signs that are available on a keyboard. Entering capital letters and special signs, by means of key combination where "Shift" key is pressed, is also possible.
In case of Polish and German, basic special characters (written using key combination of a given letter and right 'Alt' button) have been added.
Free Link printout option does not support printing of remaining special signs.

- port settings
  - settings related to a port selected for computer connection
    CAUTION: for Ethernet and Wi-Fi port Timeout parameter is on. The parameter specifies time delay – time interval for disconnection, counted from the moment of the most recent command sent from the device to which the balance is connected. Timeout parameter value has to be entered in milliseconds [ms].
- E2R
  - options: Yes/No
    E2R is a control system designed to monitor all weighing processes carried out on a balance, with E2R system activated some databases can be operated by computer exclusively (access to specified functions and options using balance is not possible).
    To start cooperation with E2R system, set <E2R> parameter to <YES> value, as a result a respective pictogram is displayed in the top bar:

    CAUTION: turn the continuous transmission off in order to provide correct cooperation with E2R system.
- address
  - parameter for setting address of balance connected with a computer
- weighing operation printout template
  - parameter enabling you to design customized printout, for this use window with printout template. For more information on designing printouts read section 12.3.
- continuous transmission, parameter enabling to turn on/off continuous transmission of a weighing result, available options:
  - continuous transmission in calibration unit, indications are transmitted in a main unit (calibration) independently from currently selected weight unit,
  - continuous transmission in current unit, indications are transmitted in a currently selected weight unit, the transmitted unit changes along with the current unit change (Units key),
  - continuous transmission turned off <NONE>,
    CAUTION!
    Continuous transmission can be turned on/off by a respective message sent form a computer (read COMMUNICATION PROTOCOL).
- interval
  Parameter enables setting frequency of printouts for continuous transmission.
  Frequency of printouts is set in seconds, wherein the accuracy is 0.1s.
  you may set any time value ranging from 1000 to 0.1 s.
  The setting is valid for continuous transmission in calibration unit and in current unit activated by means of the balance, it is also valid for continuous transmission activated by command sent from a computer.

29.2. Printer

Submenu <Printer> enables you to select a port to which data is sent upon pressing key of a balance keyboard. Content of sent data is set in <PRINTOUTS/GLP PRINTOUTS> parameter.

Procedure:

- press key
- enter <PERIPHERALS> menu

- next enter <PRINTER> menu
    - set balance parameters related to cooperation with the printer; i.e. <PORT> to which the printout is to be sent upon pressing button (printer connected), options:

      CAUTION: *In order to set USB Free Link instead of USB B, select any other port (e.g. none, COM1, etc.), and next select USB Free Link port. Analogously when changing USB Free Link to USB B.*
        - **COM 1** or **COM 2** *(not in AS X7 balances)* – RS 232 port, the one to which a printer is connected
        - **USB** type A – USB port, the one to which a PCL printer or EPSON printer is connected
        - **Ethernet** – port for transferring data from balance to a dedicated RADWAG software, e.g. PW-WIN, operated on a computer connected to a balance via network.
        - **PENDRIVE** – USB 1 port, type A, for connecting USB flash drive. PENDRIVE option requires setting format for saved file. You can save the data in the following fomats:
            - *.txt format (text file that can be opened on the computer using Notepad),
            - *.csv (.) format (file that can be opened using Excel, the transferred decimal value is separated using dot character), or
            - *.csv (,) format (file that can be opened using Excel, the transferred decimal value is separated using coma character).
        - **WIFI** – port for transferring data from balance to: a dedicated RADWAG software (e.g. PW WIN operated on a computer connected to balance via wireless communication), printer featuring Wi-Fi port, or network printer.
        - **USB PC** – USB port, type B, for connecting a computer with a dedicated RADWAG software, e.g. PW-WIN.
        - **USB FREE LINK** - USB port, type B, for connecting a computer. Tool for entering data, it functions as a keyboard. Upon proper modification of non-standard printout and sending proper command from the computer, or upon pressing ENTER key located on the operation panel, the data from non-standard printout is directly entered to computer programs, e.g. Excel, Word, Notepad etc. Select <USB FREE LINK> port and configure its settings in order to enable correct cooperation of the balance with computer programs:

          SPREADSHEET:
          – value ‘YES --.—‘ – cooperation with Excel type program, transferred decimal values are separated by dot (.)
          – value ‘YES --,--‘ – cooperation with Excel type program, transferred decimal values are separated by coma (,)
          – value ‘NO’ – cooperation with other programs (mass value transferred in a form of text),

          DELAY - if the transferred information is incomplete, i.e. part of it gets lost (due to auto-entering or auto-formatting of data by computer program) during cooperation with Excel type program, set the parameter value to <2>. If the transferred information is still incomplete, the parameter value must be higher. The value ranges between 0 (quick data transfer) and 9 (slow data transfer – around 10 characters per second).

For Free Link printout option (keyboard emulator) all languages without special characters are operated by means of ‘QWERTY’ keyboard. These languages do not use special characters.
In case of Free Link printout (keyboard emulator) all languages without special characters are operated (‘QWERTY’ keyboard layout), and two languages that feature special characters:

- Polish for ‘Polish (Programmers) keyboard’. To enable support of this language go to printer settings on your balance and select Windows-1250 code page (Central

European, Latin-2). The following Polish diacritical signs are added: ą, ć, ę, ł, ń, ó, ś, ż, ź.

- German for ‘German (Germany) keyboard’. To enable support of this language go to printer settings on your balance and select Windows -1252 code page (Western European, Latin-1). The following German diacritical signs are added: ä, ö, ü, ß. The keyboard layout changes from ‘QWERTY’ to ‘QWERTZ’. The characteristic feature of such keyboard is ‘ß’ sign located on the right side of the ‘zero’.
- French for the ‘French (France)’ keyboard layout. In the balance, in printer settings, choose Windows-1252 code page (Western Europe, Latin-1). Special characters added: é, è, ç, à, ù. The keyboard layout changed into ‘AZERTY’.

Caution!
Free Link printout option allows printing only signs that are available on a keyboard. Entering capital letters and special signs, by means of key combination where "Shift" key is pressed, is also possible.
In case of Polish and German, basic special characters (written using key combination of a given letter and right ‘Alt’ button) were added.
Free Link printout option does not support printing of remaining special signs.

An exemplary measurement printout is described in the PRINTOUTS section.

Additionally you can send a controlling code (of a hexadecimal form) to a printer either at the beginning of the printout - <PREFIX> parameter, or at the end of it - <SUFFIX> parameter. Sending these codes allows to control globally both, information and actions carried out at the beginning and/or at the end of each printout sent from a balance to a printer.

This function is most frequently used to send an information about the code page of a printout sent by a balance, at the beginning, and to send a command enabling the crop of a paper in EPSON printers (if the printer is equipped with an autocutter blade), at the end.
<PREFIX> and <SUFFIX> parameters settings are available for all the printouts sent from balance, e.g. calibration reports, and for the header, footer and GLP printouts.

CAUTION!
*It must be remembered that inserting paper crop command to <SUFFIX> parameter (control code) results in sending the code after each printout. If you wish for one whole printout to consist of: HEADER, GLP PRINTOUT and FOOTER and to be cropped underneath the FOOTER, then the paper crop command should be inserted only for FOOTER settings as a non-standard printout with <**{150}**> variable (paper crop for EPSON printer). In such a case <SUFFIX> command must remain empty.*

To ensure correct cooperation of the balance with the printer (correct printout of diacritical signs of a given language), respective baud rate obligatory for a given printer must be chosen (see the printer settings). Additionally code page of a sent printout must be accordant with a code page of a printer.

Accordance of a code page may be obtained in two ways:

- setting the right code page in the settings of a printer (see a user manual of the printer) – it must be accordant with the printout code page of a balance:

Code page	*Language*
1250	POLISH, CZECH, HUNGARIAN
1251 or 866	RUSSIAN
1252	ENGLISH, GERMAN, SPANISH, FRENCH, ITALIAN
1254	TURKISH
1256	ARABIC

- sending the control code from the balance, which automatically sets the right code page of the printer (code page accordant with the one of a balance) prior to printout of data taken from the balance (this possibility is available only for printers with such option – see a user manual of the printer).

CAUTION! CODES MUST BE ENTERED IN A HEXADECIMAL FORM!

Example balance settings for correct cooperation (printout of Polish signs) with EPSON thermal printer connected to RS232 port:

1. with impact printer, EPSON TM-U220D

Communication parameters for port to which the printer is connected:

- baud rate - 9600 bit/s
- parity - none

Printer parameters for PERIPHERALS group:

- port - COM 1 or COM 2 *(not in AS X7 balances)* (the one to which the printer is connected)
- code page - **852**

2. with thermal printer, EPSON TM-T20

Communication parameters for port to which the printer is connected:

- baud rate - 38400 bit/s
- parity - none

Printer parameters for PERIPHERALS group:

- port - COM 1 or COM 2 *(not in AS X7 balances)* (the one to which the printer is connected)
- code page - **1250**
- prefix - **1B742D**

or

- port - COM 1 or COM 2 (the one to which the printer is connected)
- code page - **852**
- prefix - **1B7412**

If in the place of the last digit there are any unexpected signs on the printout (for verified balances), than <CONTROL CODES> parameter should incorporate, apart from code page, code of the UK signs chart: **1B5203**. In such a case the <CONTROL CODES> parameter setting should be as follows: control codes - **1B74121B5203**.

Control codes for exemplary code pages and functions of the printer:

Control code	Page or other command
1B7412	Code page 852
1B7411	Code page 866
1B742D	Code page 1250
1B742E	Code page 1251
1B7410	Code page 1252
1B7430	Code page 1254
1B7432	Code page 1256
1B7433	Code page 1257
1B5203	UK signs chart
1B5202	DE signs chart
1D564108	Paper crop
0C	Form feed (for PCL printers)

29.3. Record of Measurement Data Onto a USB Flash Drive

The balance software enables record of measurement data on an external flash drive.
To perform the operation:

- Plug a USB flash drive into USB 1 port, type A.
- Set <PENDRIVE> option for <PERIPHERALS/PRINTER/PORT>.

- Return to weighing procedure.
- key, when pressed, provides record of measurement data (specified for GLP PRINTOUT), wherein the data is saved in a form of a text file, created automatically by balance software; the file name is: *printout.txt*.
- Remove the USB flash drive from a balance USB port after about 10s counting from the last measurement record, only after this time the data is saved. Next plug the USB flash drive to a computer and read the saved text file.

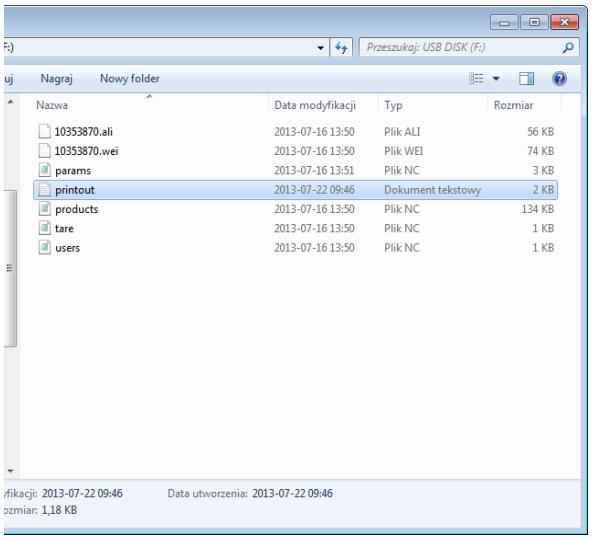

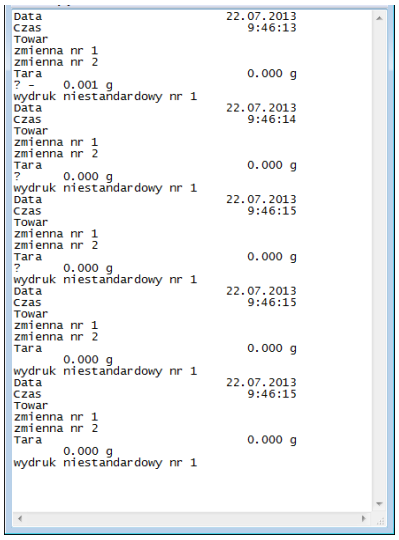

The data can be printed using any printer connected to a computer.
New data can be recorded to an existing file therefore you can continue recording measurement data using the file once created.
CAUTION! *USB flash driva shall comprise <**FAT file system**>.*

29.4. Additional display

Submenu <ADDITIONAL DISP.> comprises settings for cooperation with an external additional display WD-6.

Procedure:

- press button,
- enter <PERIPHERALS> submenu,
- enter <ADDITIONAL DISPLAY> submenu,
- set balance parameters for cooperation with an additional display,
  <PORT> - selection of the port, to which the additional display is to be connected
  - accessible options: NONE, COM 1, COM 2 *(not in AS X7 balances)*

CAUTION!
The balance cooperates with an additional display manufactured by RADWAG.
Ensuring correct cooperation between the balance and the additional display requires baud rate parameter value to be set to 115200 bit/s for the port to which the additional display is plugged.

Additional display features text area for extra information such as date, tare value etc. (balance variables), it is located at the bottom. Displayed data content is set using balance.

Procedure:

- press button,
- enter <PERIPHERALS> submenu,
- enter <ADDITIONAL DISPLAY> submenu,

- enter <BOTTOM TEXT AREA TEMPLATE> parameter, an on-screen keyboard is displayed. Enter data that is to be displayed. With the keyboard write appropriate text, press ✓ to confirm. The text can consist of 19 characters maximum. If you want to display any variable, enter it following the rules, e.g.: {3} – time. For list of available variables read section 11.4.

29.5. Barcode reader

The balance can cooperate with a barcode reader.
The barcode is used for searching products database in order to find a respective product.
To set parameters for coupling the barcode reader go to <Parameters/Peripherals/Barcode reader> submenu.

You can set:
- Communication port, to which the barcode reader is to be coupled,
- Selected port parameters.

CAUTION!
Go to <Communication> submenu to set baud rate accordant with barcode reader (by default it is 9600 b/s), this parameter can be set using barcode reader settings as well.

Procedure:
- press ⚙ button,
- enter <PERIPHERALS> submenu,
- enter <BARCODE READER> submenu,
- set balance parameters for cooperation with barcode reader:
  < PORT> - selection of the port, to which the barcode reader is to be connected
  - accessible options: NONE, COM 1, COM 2 *(not in AS X7 balances)*

29.6. External buttons

Submenu <EXTERNAL BUTTONS> comprises settings that enable the balance to cooperate with external buttons: TARE and PRINT.
Procedure:
- enter <P4 DEVICES> menu
- enter menu group <EXTERNAL BUTTONS>
- run the buttons
  - <TARE> set to <YES> value
  - < PRINT> set to <YES> value
- exit the balance menu

CAUTION:
The balance program enables cooperation with one or both buttons. If you need to connect both external buttons, first connect a several electrical outlet to COM 2 port or DB9/M to AS X7 balances, next connect buttons TARE and PRINT to the electrical outlet. Connect the printer or terminal to COM 1 or to the electrical outlet (determine the PRINTER-BALANCE transfer perameters). Every time the user presses TARE and PRINT external button, the balance reacts as if TARE and PRINT buttons of the balance keyboard were pressed.
If you need to use only one button, connect it directly to COM 2 port or DB9/M to AS X7 balances or use the electrical outlet.

In order to ensure the proper cooperation, you need to remember:
- *to connect additional buttons to COM 2 port or DB9/M to AS X7 balances,*
- *to connect the buttons to appropriate sockets of the electrical outlet if in use (see descriptions above),*
- *to activate the buttons in the balance parameters (see description above),*
- *to disconnect other external devices (additional display or barcode reader) on COM2 port (for these devices it should be <NONE>),*
- *to set the port for <PRINTER> to <COM 2> value if the printer is connected to the electrical outlet (CPU socket) – setting not available to AS X7 balances.*

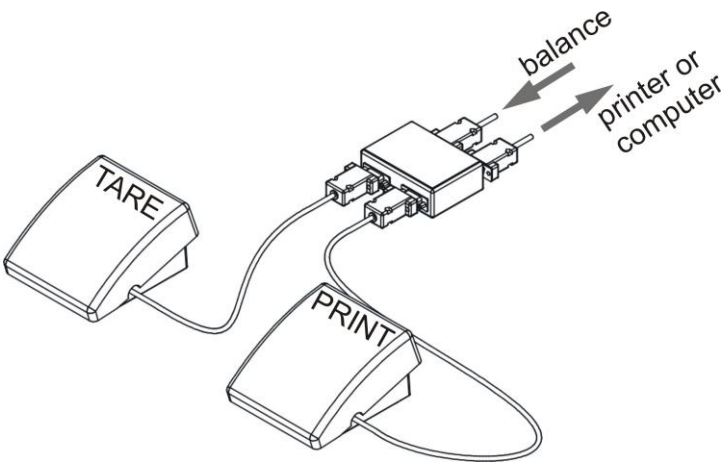

Set of external buttons TARE and PRINT.
Standard balance equipment does not include the set of external buttons.

29.7. Ambient conditions module

Ambient Conditions module can be connected to the balance via COM1 or COM2 port (*not in AS X7 balances)*. In order to provide correct cooperation enter connected module address and baud rate for the port (port settings) to which the ambient conditions module is connected (the address and baud rate data is to be found on an ambient conditions data plate).

Exemplary settings for connected ambient conditions module:

Baud rate – 115200 bit/s
Address – 15

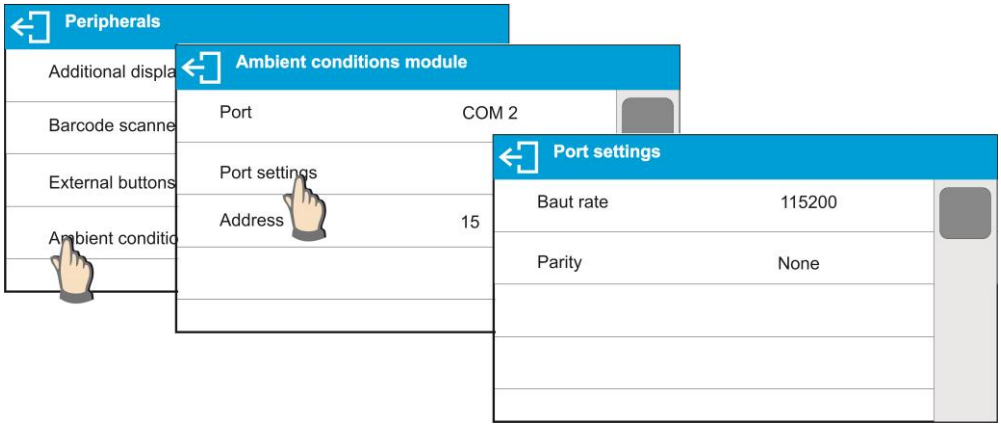

30. AMBIENT CONDITIONS

Parameters group which has been designed to enable you to turn on readout of ambient conditions recorded by THB 3/5 ambient conditions module, and to specify tolerance temperature and humidity values and a change rate for the values per hour. Entered values are referred to indicted values. Next on the basis of values comparison respective pictograms are displayed informing you whether the sensor-read values are comprised within permissible limits or not.
Particular sensors settings:

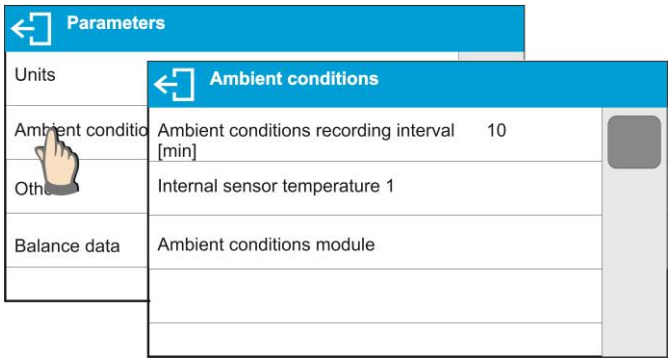

- Ambient conditions recording interval [min]: parameter enabling you to specify record frequency of sensor-registered data, and to determine how often the displayed pictograms (providing information on ambient conditions state) are to be refreshed,
- Internal sensor 1: enter this parameter to specify tolerance temperature values and balance temperature change rate,

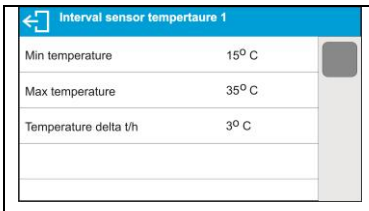	**Min temperature** – min balance temperature, for lower temperature values the thermometer pictogram is red **Max temperature** – max balance temperature, for higher temperature values the thermometer pictogram is red **Temperature Δt/h** – maximum balance temperature change rate, for higher change rate values the balance displays blinking red thermometer pictogram

In order to enable/disable parameter visibility go to service menu.

- Ambient conditions module: parameters group which has been designed to enable you to turn on readout of data recorded by a balance-connected ambient conditions module, and to specify tolerance values for this module.

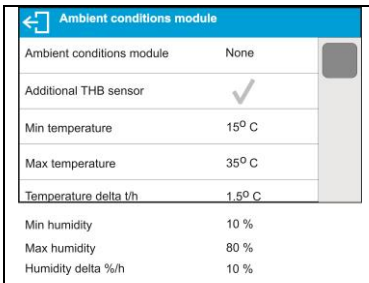	**Ambient conditions module** – parameter specifying module's working mode. Available options: **None** – readout of ambient condition module indications turned off; **Record and alert** – readout and record of indications into database turned on, option of display of warnings informing on ambient conditions change turned on, the warnings are displayed in accordance with the following tolerance values settings. **Additional temperature sensor** – turning on readout of indication of the additional temperature sensor connected to the ambient conditions module.
Min temperature – min balance temperature, for lower temperature values the thermometer pictogram is red. **Max temperature** – max balance temperature, for higher temperature values the thermometer pictogram is red. **Temperature Δt/h** – maximum balance temperature change rate, for higher change rate values the balance displays blinking red thermometer pictogram. **Min humidity** – min humidity value, for lower humidity values the thermometer pictogram is red.	

Max humidity – max humidity value, for higher humidity values the thermometer pictogram is red. **Humidity Δ%/h** – maximum humidity change rate, for higher change rate values the balance displays blinking red thermometer pictogram.

With all the parameters set, the home screen displays respective pictograms informing on current ambient conditions readouts and their change.

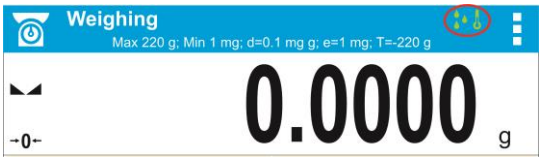

Pictograms for ambient conditions state:

No.	*Pictogram*	*Overview*
1		Indicated temperature is within specified permissible limits
2		Indicated temperature is out of specified permissible limits
3		Indicated humidity is within specified permissible limits
4		Indicated humidity is out of specified permissible limits
5		Temperature change rate is to high (blinking pictogram)
6		Humidity change rate is too high (blinking pictogram)

31. COMMUNICATION PROTOCOL

General information

A. A character based communication protocol balance-terminal is designed for establishing communication between a RADWAG balance and a peripheral device via RS-232C serial interface.

B. It consists of commands sent from a peripheral device to the balance and responses from the balance.

C. Responses are sent from the balance on each receipt of a command as a reaction to a specific command.

D. Commands, forming the communication protocol, enable both, obtaining data on balance status and influencing balance operation, e.g.: acquiring measurement results from the balance, zeroing, etc.

AKRIBIS · www.akribis.info · contacto@akribis.info

31.1. List of Commands

Command	Command overview
Z	Zero balance
T	Tare balance
OT	Give tare value
UT	Set tare
S	Send stable measurement result in basic measuring unit
SI	Immediately send measurement result in basic measuring unit
SU	Send stable measurement result in current measuring unit
SUI	Immediately send measurement result in current measuring unit
C1	Switch on continuous transmission in basic measuring unit
C0	Switch off continuous transmission in basic measuring unit
CU1	Switch on continuous transmission in current measuring unit
CU0	Switch off continuous transmission in current measuring unit
DH	Set min checkweighing threshold
UH	Set max checkweighing threshold
ODH	Give value of min checkweighing threshold
OUH	Give value of max checkweighing threshold
SM	Set mass value of a single item
TV	Set target mass value
RM	Set reference mass value
NB	Give balance serial number
SS	Value release
IC	Internal adjustment performance
IC1	Disable automatic internal adjustment of the balance
IC0	Enable automatic internal adjustment of the balance
K1	Lock balance keypad
K0	Unlock balance keypad
OMI	Give available working modes
OMS	Set working mode
OMG	Give current working mode
UI	Give accessible units
US	Set unit
UG	Give current unit
BP	Activate sound signal
PC	Send all implemented commands
BN	Give balance type
FS	Give Max capacity
RV	Give program version
A	Set autozero function
EV	Set ambient conditions state
EVG	Give currently set ambient conditions
FIS	Set filter
FIG	Give current filter
ARS	Set value release
ARG	Give current value release
LDS	Set last digit
LOGIN	Operator Logging
LOGOUT	Operator Logout
NT	Cooperation with PUE 7.1, PUE 10 terminal

CAUTION!
Each command must end with CR LF characters;

31.2. Response format

On receipt of a command, the terminal sends a response in one of the following formats:

XX_A CR LF	command understood and in progress
XX_D CR LF	command carried out (appears only after the command XX_A)
XX_I CR LF	command understood but not accessible at this moment
XX _ ^ CR LF	command understood but max threshold is exceeded
XX _ v CR LF	command understood but min threshold is exceeded
XX _ OK CR LF	command carried out
ES_CR LF	command not recognised
XX _ E CR LF	time limit exceeded while waiting for a stable measurement result (time limit is balance characteristic parameter)

XX - stands for a name of a sent command
_ - stands for spaces

Commands Overview

Zero balance

Format: **Z CR LF**
Response options:

Z_A CR LF	- command understood and in progress
Z_D CR LF	- command carried out
Z_A CR LF	- command understood and in progress
Z_^ CR LF	- command understood but zeroing range is exceeded
Z_A CR LF	- command understood and in progress
Z_E CR LF	- time limit exceeded while waiting for stable measurement result
Z_I CR LF	- command understood but not accessible at this moment

Tare balance

Format: **T CR LF**
Response options:

T_A CR LF	- command understood and in progress
T_D CR LF	- command carried out
T_A CR LF	- command understood and in progress
T_v CR LF	- command understood but taring range exceeded
T_A CR LF	- command understood and in progress
T_E CR LF	- time limit exceeded while waiting for stable measurement result
T_I CR LF	- command understood but not accessible at this moment

Give tare value

Format: **OT CR LF**
Response: **OT_TARE CR LF** - command carried out
Response format:

1	2	3	4-12	13	14	15	16	17	18	19
O	T	space	tare	space	unit			space	CR	LF

Tare - 9 characters with right justification
Unit - 3 characters with left justification

CAUTION!
Tare value is always given in calibration unit.

Set tare

Format: **UT_TARE CR LF**, where **TARE** – tare value
Response options:
UT_OK CR LF - command carried out
UT_I CR LF - command understood but not accessible at this moment
ES CR LF - command not recognised (tare format incorrect)
CAUTION!
Use dot in tare format as decimal point.

Send stable measurement result in a basic measuring unit

Format: **S CR LF**
Response options:
S_A CR LF - command understood and in progress
S_E CR LF - time limit exceeded while waiting for stable measurement result
S_I CR LF - command understood but not accessible at this moment
MASS FRAME - response: mass value in a basic measuring unit
Response format:

1	2-3	4	5	6	7-15	16	17	18	19	20	21
S	space	stability marker	space	character	mass	space	unit			CR	LF

An example:
S CR LF - command send form a computer
S _ A CR LF - command understood and in progress
S _ _ _ _ - _ _ _ _ _ _ _ 8 . 5 _ g _ _ CR LF - command carried out, response: mass value in a basic measuring unit.
where: _ - space

Immediately send measurement result in a basic measuring unit

Format: **SI CR LF**
Response options:
SI_I CR LF - command understood but not accessible at this moment
MASS FRAME - immediate response: mass value in a basic measuring unit
Response format:

1	2	3	4	5	6	7-15	16	17	18	19	20	21
S	I	space	stability marker	space	character	mass	space	unit			CR	LF

An example:
S I CR LF - command sent from a computer
S I _ ? _ _ _ _ _ _ _ 1 8 . 5 _ k g _ CR LF - command carried out, immediate response: mass value in a basic measuring unit
where: _ - space

Send stable measurement result in a current measuring unit

Format: **SU CR LF**
Response options:
SU_A CR LF - command understood and in progress
SU_E CR LF - time limit exceeded while waiting for a stable measurement result
SU_I CR LF - command understood but not accessible at this moment
MASS FRAME - response: mass value in a current measuring unit

Response format:

1	2	3	4	5	6	7-15	16	17	18	19	20	21
S	U	space	stability marker	space	character	mass	space	unit			CR	LF

An example:

S U CR LF - command send form a computer
S U _ A CR LF - command understood and in progress
S U _ _ _ - _ _ 1 7 2 . 1 3 5 _ N _ _ CR LF - command carried out, response: mass value in a current measuring unit
where: _ - space

Immediately send measurement result in a current measuring unit

Format: **SUI CR LF**
Response options:
SUI_I CR LF - command understood but not accessible at this moment
MASS FRAME - immediate response: mass value in a current measuring unit
Response format:

1	2	3	4	5	6	7-15	16	17	18	19	20	21
S	U	I	stability marker	space	character	mass	space	unit			CR	LF

An example:

S U I CR LF - command sent from a computer
S U I ? _ - _ _ _ 5 8 . 2 3 7 _ k g _ CR LF - command carried out, immediate response: mass value in a current measuring unit
where: _ - space

Switch on continuous transmission in a basic measuring unit

Format: **C1 CR LF**
Response options:
C1_I CR LF - command understood but not accessible at this moment
C1_A CR LF - command understood and in progress
MASS FRAME - response: mass value in a basic measuring unit
Response format:

1	2	3	4	5	6	7-15	16	17	18	19	20	21
S	I	space	stability marker	space	character	mass	space	unit			CR	LF

Switch off continuous transmission in a basic measuring unit

Format: **C0 CR LF**
Response options:
C0_I CR LF - command understood but not accessible at this moment
C0_A CR LF - command understood and carried out

Switch on continuous transmission in a current measuring unit

Format: **CU1 CR LF**
Response options:
CU1_I CR LF - command understood but not accessible at this moment
CU1_A CR LF - command understood and in progress
MASS FRAME - response: mass value in a current measuring unit

Response format:

1	2	3	4	5	6	7-15	16	17	18	19	20	21
S	U	I	stability marker	space	character	mass	space	unit			CR	LF

Switch off continuous transmission in a current measuring unit

Format: **CU0 CR LF**
Response options:
CU0_I CR LF - command understood but not accessible at this moment
CU0_A CR LF - command understood and carried out

Set min checkweighing threshold

Format: **DH_XXXXX CR LF**, where: _ **-** space**, XXXXX** – mass format
Response options:
DH_OK CR LF - command carried out
ES CR LF - command not recognised (mass format incorrect)

Set max checkweighing threshold

Format: **UH_XXXXX CR LF**, where: _ **-** space**, XXXXX** - mass format
Response options:
UH_OK CR LF - command carried out
ES CR LF - command not recognised (mass format incorrect)

Give value of min checkweighing threshold

Format: **ODH CR LF**
Response: **DH_MASA CR LF** - command carried out
Response format:

1	2	3	4-12	13	14	15	16	17	18	19
D	H	space	mass	space	unit			space	CR	LF

Mass - 9 characters with right justification
Unit - 3 characters with left justification

Give value of max checkweighing threshold

Format: **OUH CR LF**
Response: **UH_MASA CR LF** - command carried out
Response format:

1	2	3	4-12	13	14	15	16	17	18	19
U	H	space	mass	space	unit			space	CR	LF

Mass - 9 characters with right justification
Unit - 3 characters with left justification

Set mass value of a single item (only for PARTS COUNTING)

Format: **SM_XXXXX CR LF**, where: _ **-** space**, XXXXX** – mass format
Response options:
SM_OK CR LF - command carried out
SM_I CR LF - command understood but not accessible at this moment (e.g. mode other than PARTS COUNTING)
ES CR LF - command not recognised (mass format incorrect)

Set target mass value (e.g. for DOSING)

Format: **TV_XXXXX CR LF**, where: _ **-** space**, XXXXX** - mass format

Response options:

TV_OK CR LF	- command carried out
TV_I CR LF	- command understood but not accessible at this moment (e.g. mode other than DOSING)
ES CR LF	- command not recognised (mass format incorrect)

Set reference mass value (e.g. for PERCENT WEIGHING)

Format: **RM_XXXXX CR LF**, where: _ **-** space**, XXXXX** – mass format

Response options:

RM_OK CR LF	- command carried out
RM_I CR LF	- command understood but not accessible at this moment (e.g. mode other than PERCENT WEIGHING)
ES CR LF	- command not recognised (mass format incorrect)

Value release

Format: **SS CR LF**

Response options:

SS_OK CR LF - command understood and in progress

Command's function is similar to function of PRINT button located on an overlay,

Internal adjustment

Format: IC CR LF

Response options:

IC_A CR LF	- command understood and in progress
IC_D CR LF	- calibration completed
IC_A CR LF	- command understood and in progress
IC_E CR LF	- time limit exceeded while waiting for a stable measurement result
IC_I CR LF	- command understood but not accessible at this moment

Disable automatic internal adjustment of the balance

Format: IC1 CR LF

Response options:

IC1_I CR LF	- command understood but not accessible at this moment
IC1_E CR LF	- operation disabled, e.g. for verified balance
IC1_OK CR LF	- command carried out

Operation is disabled for verified balances.

For non-verified balances the command inhibits internal calibration until it is enabled via IC0 command or until the balance is turned off. The command does not modify settings specifying calibration start.

Enable automatic internal adjustment of the balance

Format: IC0 CR LF

Response options:

IC0_I CR LF	- command understood but not accessible at this moment
IC0_OK CR LF	- command carried out

Operation is disabled for verified balances.

Give balance serial number

Format: NB CR LF
Response options:
NB_A_”x” CR LF - command understood, response: serial number
NB_I CR LF - command understood but not accessible at this moment
x – serial number of the device (inserted in between inverted commas)

An example:
Command: NB CR LF – return serial number
Response: NB_A_”1234567” – serial number of the device – ”1234567”

Lock balance keypad

Format: K1 CR LF
Response options:
K1_I CR LF - command understood but not accessible at this moment
K1_OK CR LF - command carried out
Command locks the balance keypad (proximity sensors, touch panel) until the moment of turning the balance off or until sending K0 command

Unlock balance keypad

Format: K0 CR LF
Response options:
K0_I CR LF - command understood but not accessible at this moment
K0_OK CR LF - command carried out

Give available working modes

Command overview: Command returns accessible working modes.
Format: OMI <CR><LF>
Response options:
OMI <CR><LF>
n_”Nazwa modu” <CR><LF>:
n_”Nazwa modu” <CR><LF> – command carried out, response: accessible working modes
OK <CR><LF>
OMI_I <CR><LF> – command understood but not accessible at this moment

Mode name – parameter, working mode name, inserted in between inverted comas. The name takes form given on a particular balance display, it is provided in a currently selected language.
n – parameter, decimal value determining working mode number.

n →
1 – Weighing
2 – Parts Counting
3 – Percent Weighing
4 – Dosing
5 – Formulas
6 – Animal Weighing
8 – Density of Solid Bodies
9 – Density of Liquids
10 – Peak Hold
11 – Totalizing
12 – Checkweighing
13 – Statistics

CAUTION! *Working modes numbering is identical for each kind of balance. The numbers are assigned to working modes names. Some balances give only the number as a response.*

An example 1:
Command: OMI <CR><LF> – return accessible working modes
Response: OMI <CR><LF>
2_” Parts counting” <CR><LF>
4_” Dosing” <CR><LF>
12_”Checkweighing” <CR><LF>
– accessible working modes are given in return:
mode number + name

	OK <CR><LF>	– command carried out

An example 2:

Command:	OMI <CR><LF>	– return accessible working modes
Response:	OMI <CR><LF> 2 <CR><LF> 4 <CR><LF> 12 <CR><LF>	– accessible working modes are given in return: mode number
	OK <CR><LF>	– command carried out

Set working mode

Command overview: Command sets particular working mode.
Format: OMS_n <CR><LF>
Response options:

OMS_OK <CR><LF>	– command carried out
OMS_E <CR><LF>	– error in-course of command execution, no parameter or incorrect format
OMS_I <CR><LF>	– command understood but not accessible at this moment

n – parameter, decimal value determining working mode number. To see detailed description go to OMI command

An example:

Command:	OMS_13<CR><LF>	– set Statistics mode
Response:	OMS_OK<CR><LF>	– Statistics mode set

Give current working mode

Command overview: Command returns currently set working mode.
Format: OMG <CR><LF>
Response options:

OMG_n_OK <CR><LF>	– command carried out, response: current working mode
OMG_I <CR><LF>	– command understood but not accessible at this moment

n – parameter, decimal value determining working mode number. To see detailed description go to OMI command.

An example:

Command:	OMG<CR><LF>	– return current working mode
Response:	OMG_13_OK<CR><LF>	– balance operates in Statistics working mode

Give accessible units

Command overview: Command returns units available for a particular device and for a current working mode.
Format: UI <CR><LF>
Response options:

UI_"x_1,x_2, … x_n"_OK<CR><LF>	– command carried out, returns accessible units
UI_I <CR><LF>	– command understood but not accessible at this moment

x – unit symbols, separated by means of comas
x → g, mg, ct, lb, oz, ozt, dwt, tlh, tls, tlt, tlc, mom, gr, ti, N, baht, tola, u1, u2

An example:

Command:	UI <CR><LF>	– return available units
Response:	UI_"g, mg, ct"_OK<CR><LF>	– response: available units

Set current unit

Command overview: Command sets current unit for a particular device.
Format: US_x <CR><LF>
Response options:

US_ x_OK <CR><LF	– command carried out, response: current unit
US_E <CR><LF>	– error in-course of command execution, no parameter or incorrect format
US_I <CR><LF>	– command understood but not accessible at this moment

x – parameter, units symbols: g, mg, ct, lb, oz, ozt, dwt, tlh, tls, tlt, tlc, mom, gr, ti, N, baht, tola, msg, u1, u2, next

CAUTION! *if x=next, the command swaps to another avaialable unit on the list (it simulates „unit" button pressing).*

An example:

Command:	US_mg<CR><LF>	– set „mg" unit
Response:	US_mg_OK<CR><LF>	– „mg" set as a current unit

Give current unit

Command overview: command returns current unit.
Format: UG <CR><LF>
Response options:

UG_x_OK<CR><LF>	– command carried out, response: current unit
UG_I <CR><LF>	– command understood but not accessible at this moment

x – parameter, unit symbol

An example:

Command:	UG<CR><LF>	– return current unit
Response:	UG_ct_OK<CR><LF>	– currently set unit is „ct"

Activate sound signal

Command overview: command activates BEEP sound signal for a specified amount of time
Format: BP_CZAS <CR><LF>
Response options:

BP_OK <CR><LF>	– command carried out, BEEP sound signal activated
BP_E" <CR><LF>	– no parameter or incorrect format
BP_I <CR><LF>	– command understood but not accessible at this moment

TIME – parameter, decimal value specifying how long shall the sound last, parameter given in [ms]. Recommended range <50 - 5000>.
If value greater than the permissible high limit is given, than BEEP sound is operated for the maximum permissible amount of time.

An example:

Command:	BP_350<CR><LF>	– activate BEEP for 350 ms
Response:	BP_OK<CR><LF>	– BEEP activated

CAUTION!
BEEP sound activated via BP command is inhibited if in-course of its activation the sound is activated by means of other device: keypad, touch panel, proximity sensors.

Send all implemented commands

Format: **PC CR LF**

Command:	PC CR LF	- send all implemented commands
Response:	PC_A_"Z,T,S,SI…"	- command carried out, the terminal displays all implemented commands.

Give balance type

Format: BN <CR><LF>
Response options:

BN_A_"x" <CR><LF>	- command understood, response: balance type
BN_I <CR><LF>	- command understood but not accessible at this moment

x – series of types for a particular balance (in between inverted commas), with general balance type in front

An example:

Command:	BN <CR><LF>	– return balance type
Response:	BN_A_"AS"	– balance type: "AS R"

Give max capacity

Format: FS <CR><LF>
Response options:
FS_A_"x" <CR><LF> - command understood, response: Max capacity
FS_I <CR><LF> - command understood but not accessible at this moment
x – Max value of reading units (in between inverted commas)
An example:
Command: FS <CR><LF> – return Max capacity
Response: FS_A_"220.0000" – Max capacity: "220 g"

Give program version

Format: RV <CR><LF>
Response options:
RV_A_"x" <CR><LF> - command understood, response: program version
RV_I <CR><LF> - command understood but not accessible at this moment
x – program version (in between inverted commas)
An example:
Command: RV <CR><LF> – return program version
Response: RV_A_" 1.1.1" – program version: "1.1.1"

Set AUTOZERO function

Format: A_n <CR><LF>
Response options:
A_OK <CR><LF> – command carried out
A_E <CR><LF> – error in-course of command execution, no parameter or incorrect format
A_I <CR><LF> – command understood but not accessible at this moment
n – parameter, decimal value determining autozero settings
n → 0 – autozero off
1 – autozero on
CAUTION!
Command changes settings for a current working mode.
An example:
Command: A_1<CR><LF> – turn autozero function on
Response: A_OK<CR><LF> – autozero function is on
AUTOZERO function operates until it is turned off by A 0 command.

Set ambient conditions state

Format: EV_n <CR><LF>
Response options:
EV_OK <CR><LF> – command carried out
EV_E <CR><LF> – error in-course of command execution, no parameter or incorrect format
EV_I <CR><LF> – command understood but not accessible at this moment
n – parameter, decimal value determining ambient conditions state
n → 0 – unstable ambient conditions
1 – stable ambient conditions
CAUTION!
Command changes settings for a current working mode.
An example:
Command: EV_1<CR><LF> – set value 'stable' for ambient conditions option
Response: EV_OK<CR><LF> – ambient conditions option set to value 'stable'
<AMBIENT CONDITIONS> parameter is set to value <STABLE> until command EV 0 swaps it to value <UNSTABLE>.

Give currently set ambient conditions

Command overview:

On receipt of a command, the terminal sends information on currently set ambient conditions.

Format: **EVG <CR><LF>**

Response options:

EVG_x_OK<CR><LF> - command carried out, returns set ambient conditions

EVG_I <CR><LF> - command understood but not accessible at this moment

x - parameter, ambient conditions symbols

Example:

Command:	EVG<CR><LF>	- give currently set ambient conditions
Response:	EVG_0_OK<CR><LF>	- currently set ambient conditions unstable

Set filter

Format: FIS_n <CR><LF>
Response options:

FIS_OK <CR><LF>	– command carried out
FIS_E <CR><LF>	– error in-course of command execution, no parameter or incorrect format
FIS_I <CR><LF>	– command understood but not accessible at this moment

n – parameter, decimal value determining filter number

n → 1 – very fast
2 – fast
3 – average
4 – slow
5 – very slow

CAUTION!

The numbering is assigned to a particular filter name and it is identical for all balance types.
The command changes settings for a current working mode if, for a particular balance type, filter settings are assigned to the working mode.

An example:

Command:	FIS_3<CR><LF>	– set average filter
Response:	FIS_OK<CR><LF>	– average filter set

Give current filter

Command overview:

On receipt of a command, the terminal sends information on currently set filter.

Format: **FIG <CR><LF>**

Response options:

FIG_x_OK<CR><LF> - command carried out, returns set filter

FIG_I <CR><LF> - command understood but not accessible at this moment

x - parameter, filter symbols

Example:

Command:	FIG<CR><LF>	- give current filter
Response:	FIG_2_OK<CR><LF>	- currently set average filter

Set Value release

Format: ARS_n <CR><LF>
Response options:
ARS_OK <CR><LF> – command carried out
ARS_E <CR><LF> – error in-course of command execution, no parameter or incorrect format
ARS_I <CR><LF> – command understood but not accessible at this moment
n – parameter, decimal value determining value release options
n → 1 – fast
2 – fast+reliable
3 – reliable

CAUTION!
The numbering is assigned to a particular value release option and it is identical for all balance types.
The command changes settings for a current working mode if, for a particular balance type, value release settings are assigned to the working mode

An example:

Command:	ARS_2<CR><LF>	– set value release parameter to fast+reliable option
Response:	ARS_OK<CR><LF>	– fast+reliable option set

Give current value release

Command overview:

On receipt of a command, the terminal sends information on currently value release.

Format: **ARG <CR><LF>**

Response options:
ARG_x_OK<CR><LF> - command carried out, returns set value release
ARG_I <CR><LF> - command understood but not accessible at this moment

x - parameter, value release symbol

Example:

Command:	ARG<CR><LF>	- give current value release
Response:	ARG_2_OK<CR><LF>	- currently set value release parameter to fast+reliable option

Set last digit

Format: LDS_n <CR><LF>
Response options:
LDS_OK <CR><LF> – command carried out
LDS_E <CR><LF> – error in-course of command execution, no parameter or incorrect format
LDS_I <CR><LF> – command understood but not accessible at this moment
n – parameter, decimal value determining last digit settings
n → 1 – always
2 – never
3 – when stable

CAUTION!
The numbering is assigned to a particular last digit option and it is identical for all balance types.
The command changes settings for a current working mode if, for a particular balance type, last digit settings are assigned to the working mode.

An example:

Command:	LDS_1<CR><LF>	– set last digit option to value ‘always’
Response:	LDS_OK<CR><LF>	– ‘always’ value set

User logging

Format: LOGIN_*Nazwa,Hasło* CR LF
where: _- space (enter name and password in a form provided by the balance – lower-case letters and upper-case letters)
Response options:

LOGIN OK CR LF	– command understood, new operator logged in
LOGIN ERRROR CR LF	– command understood, name or password error occurrence, logging operation cannot be carried out
ES CR LF	– command not understood (format error)

User logout

Format: LOGOUT CR LF
Response options:

LOGOUT OK CR LF	- command understood, operator logged out
ES CR LF	- command not understood (format error)

Cooperation with PUE 7.1, PUE 10 terminal

Format: NT CR LF
Response options:

ES CR LF	- command not understood (format error)
MASS FRAME	- response: mass value in a basic measuring unit

Response format:

1	2	3	4	5	6	7	8	9-18	19	20-22	23	24-32	33	34-36	37	38	39	40	41	42-43	44	45
N	T	space	stability marker	zero marker	range marker	digit marker	space	mass	space	mass unit	space	tare	space	tare unit	space	Hidden digits quantity	space	Balance status	space	Countdown prior to an automatic adjustment	CR	LF

NT	-	command
Stability marker	-	[space] if stable, [?] if unstable
Zero marker	-	[space] for any value but zero, [Z] for zero value
Range marker	-	marker informing on range within which mass value is comprised: [space] I range balance, [2] II balance, [3] III balance
Digit marker	-	[zero] no digit, [1] one digit marker, [2] two digits marker, [3] three digits marker, [4] four digits marker, [5] five digits marker
Mass	-	10 characters for net mass given in adjustment unit (with dot and a floating-point "-" sign)
Mass unit	-	3 characters - left justification
Tare	-	9 characters with dot - right justification (when floating-point tare gets turned off automatically then zero value is sent)
Tare unit	-	3 characters - left justification
Hidden digit quantity	-	Number specifying quantity of hidden digits: [space] when no digits are hidden, [1] when 1 digit is hidden, [2] when 2 digits are hidden, [3] when 3 digits are hidden
Balance status	-	Number specifying balance status: [0] weighing, [1] pending adjustment start, [2] balance adjustment
Countdown prior to an automatic adjustment	-	For status [1], given in seconds as time interval prior to an automatic adjustment start, the value ranges between 30 - 01. For the remaining statuses the value is 00.

Example:

NT CR LF - command sent form a computer

N T _ ? _ _ 0 _ _ _ _ _ - 5 . 1 1 3 _ g _ _ _ _ _ _ _ 0 . 0 0 0 _ g _ _ _0_1_28CR LF

- command carried out, response: mass value and remaining data where: _ - space

31.3. Manual printout / automatic printout

X7 series balance enables generating manual or automatic printouts.

- Manual printout: on stabilization of indication (measurement result) press key.
- Automatic printout is generated automatically in accordance with the settings for automatic printout (*see point 9.14 of this user manual*).

The content of a printout depends on setting in menu <Standard printout> - <Weighing printout template> (*see point 11.2 of this user manual)*.

Mass printout format:

1	2	3	4 -12	13	14	15	16	17	18
Stability marker	space	character	mass	space	unit			CR	LF

Stability marker	[space] if stable [?] if unstable [^] if high limit is out of range [v] if low limit is out of range
Character	[space] for positive values [-] for negative values
Mass	9 characters with decimal point and right justification
Unit	3 characters with left justification

An example:

_ _ _ _ _ _ 1 8 3 2 . 0 _ g _ _ CR LF - printout generated using balance upon pressing key, the printout is generated with reference to settings for <GLP printout>:

Date	**NO**	Universal variable 3	**NO**
Time	**NO**	Net	**NO**
User	**NO**	Tare	**NO**
Product	**NO**	Gross	**NO**
Customer	**NO**	Current result	**YES**
Packaging	**NO**	Adjustment report	**NO**
Universal variable 1	**NO**	Non-standard printout	**NONE**
Universal variable 2	**NO**		

Format of data sent on pressing PRINT button for legalization balance

1	2	3	4 -14	15	16	17	18	19	20
stability marker	space	character	mass	space	unit			CR	LF

Stability marker	[space] if stable [?] if unstable [^] if error of exceeding range to + occurs [v] if error of exceeding range to – occurs
Character	[space] for positive values [-] for negative values
Mass	11 characters with decimal point and right justification
Unit	3 characters with left justification

An example**:**

_ _ _ _ _ _ 1 8 . 3 2 [0] _ g _ _ CR LF - printout generated using balance upon pressing key, the printout is generated with reference to settings for <GLP printout>:

32. PERIPHERAL DEVICES

The balance can cooperate with the following peripheral devices:

- computer,
- EPSON labeller,
- PCL printer,
- an optional peripheral device operating in ASCII communication protocol.

33. ERROR MESSAGES

Max weighing threshold exceeded Unload the weighing pan	Display capacity out of range Unload the weighing pan
Min weighing threshold exceeded Install weighing pan	Zeoring out of range Press tarring button or restart the balance
Start mass out of range Install weighing pan	Zeoring/tarring time out of range Weighing indication unstable
Tarring out of range Press zeoring button or restart the balance	

34. ADDITIONAL EQUIPMENT

Type	Name
P0151	RS232 cable for printer
RTP-UEW80 or RTP-RU80	Dot printer
	PCL printer
SAL	Anti-vibration table for AS and PS series balances
	PC keyboard – USB type.
THB 3/5	Ambient conditions module

35. BALANCE DATA

Balance Data menu provides information on balance and balance software. The parameters serve informative purposes.

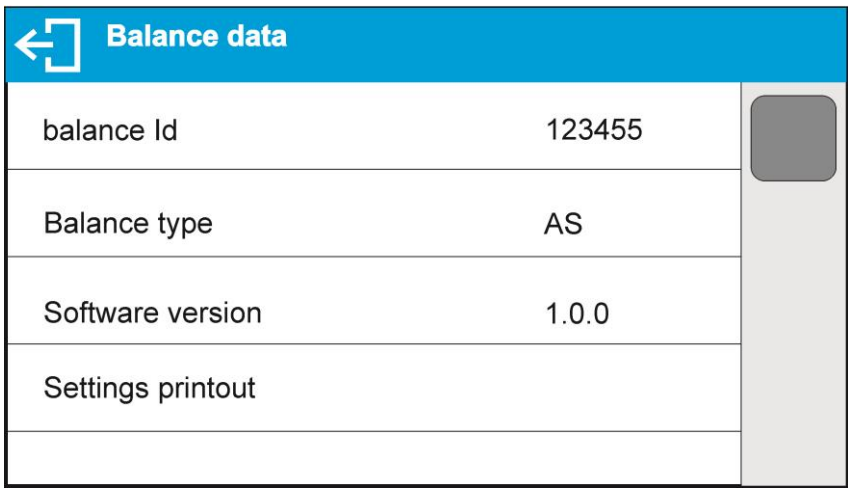

In order to send balance settings to printer port, select <Settings printout> parameter.