USER GUIDE

WL-101-0173

Radwag

Distributed by AKRIBIS

User manual

IMMU-401-03-05-24-EN

Weighing workstations

SDKP
SDKP DUAL

radwag.com
Scan the QR code to view additional scientific material that may be of interest to you.
There you will find more useful information in an accessible format!

AKRIBIS www.akribis.info contacto@akribis.info

MAY 2024

Contents

1. INTENDED USE 3

2. UNPACKING 4

3. DIMENSIONS 5

4. SDKP WORKSTATION ASSEMBLY 7

4.1. Setting-up 7

5. SDKP/DUAL WORKSTATION ASSEMBLY 13

5.1. Setting-up 13

6. CLEANING 19

1. INTENDED USE

The weighing workstation is intended for microscales and analytical balances, and may also be used as a pipette calibration work stand.
To design it, all factors contributing to fast, convenient and ergonomic operation have been taken into consideration.
The outer structure of the workstation is supplied with a built-in autonomous anti-vibration table with a stone top. This solution eliminates potential vibrations and substantially shortens the balance stabilisation time.
The workstation is highly functional and ergonomic in terms of use.

Main fields of application:

- Pipette calibration stand;
- Microscale laboratory stand;
- Analytical balance laboratory stand.

The weighing station is available in two variants:

- Professional single weighing workstation (SDKP),
- Professional dual weighing workstation (SDKP/DUAL)

The workstation is composed of two elements:

- Desk with lockable cabinets
- Anti-vibration table with stone top.

The desk is made of a HPL laminated chipboard. It is equipped with two lockable cabinets and a pull-out shelf that allow installing the computer, keyboard and mouse as well as UPS emergency power adapter or power strip.
An elevated structure for a LCD display unit is located at the back of the top.

The anti-vibration table is painted and made of steel. The top of the aforesaid table is a granite stone with the following dimensions: 410×270×115 mm.

2. UNPACKING

Take all pieces of the workstation out of boxes and check the delivery items as per the list below.

Workstation equipment

	SDKP workstation	*SDKP/DUAL workstation*
Inner structure for stone top positioning (the base of the balance)	1	1
Outer structure of the station	1	1
Stone top – base of the balance	1	2
Display unit base	1	1
Water container	1	1

Workstation electronics

	SDKP workstation	*SDKP/DUAL workstation*
PC unit	1	1
LCD display unit	1	1
Wireless keyboard	1	1
Wireless mouse	1	1
Power strip	1	1
THB-3/3 thermohygrobarometer	1	1
THB-2-50 immersion sensor	1	1
THB-R ambient conditions recorder	1	1
Liquid pump	1	1

3. DIMENSIONS

SDKP

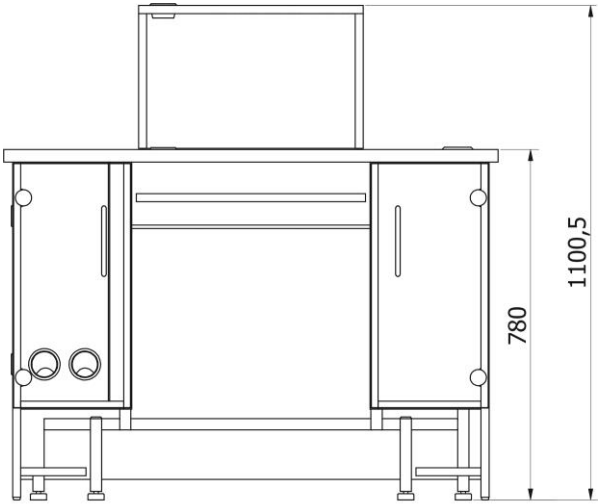

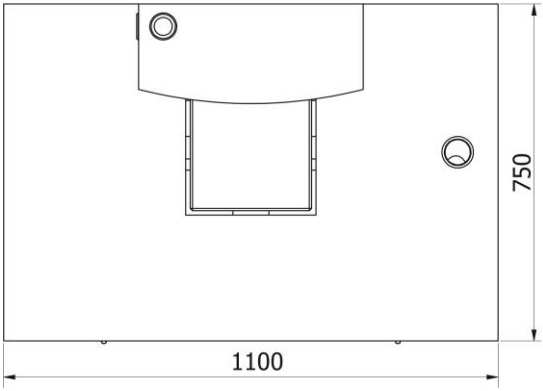

SDKP /DUAL

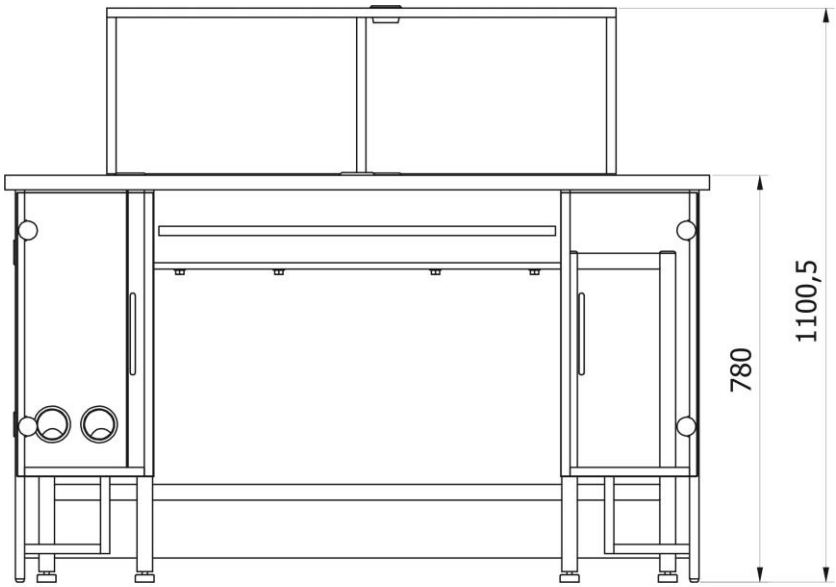

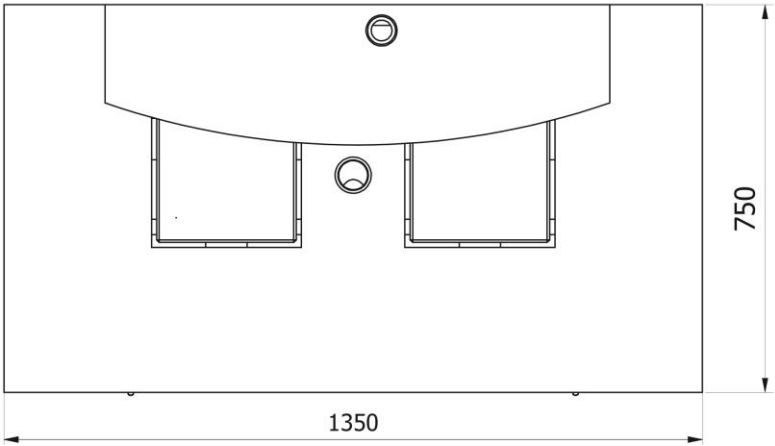

4. SDKP WORKSTATION ASSEMBLY

4.1. Setting-up

NOTE: Please remain highly careful when setting items up as such pieces as a stone are heavy and may pose a threat while completing the workstation.

Set the station up as per the following figures.

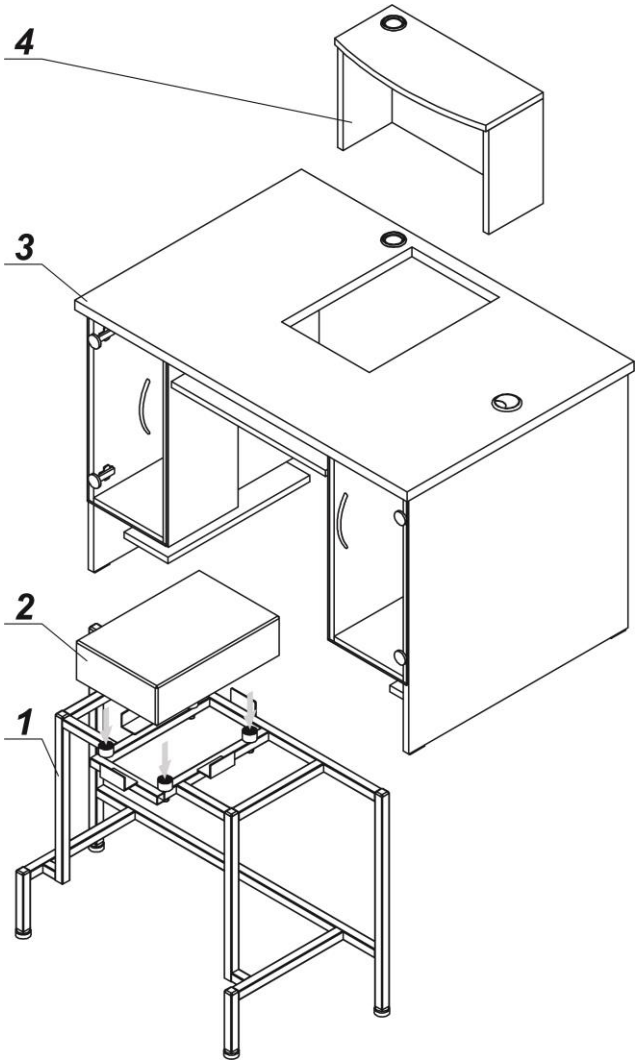

The order of assembly:

1. Position the inner structure (1) in a dedicated spot.
2. Put the stone top (2) on shock absorbers of the structure so that the stone does not touch side guards.
3. Install the outer structure (3) of the station.

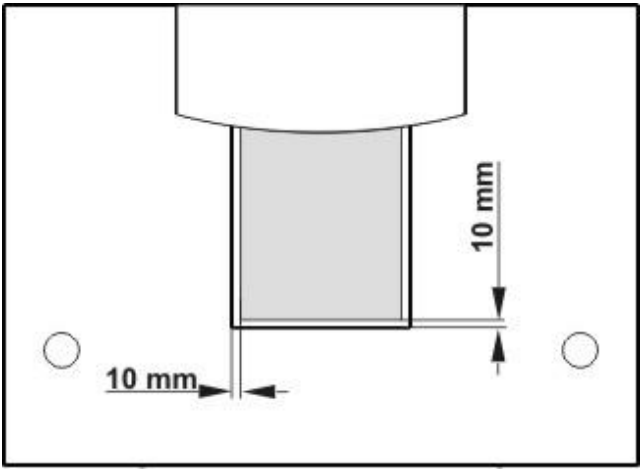

Remember to make sure the stone top is evenly distanced from edges of a measuring table (around 10 mm from each side).

4. Install the base of the display unit (4)
5. Install the water container in the right cabinet of the station (the container must be installed in the holder inside the cabinet). Connect flexible wires to the container.

Once the workstation has been prepared in the way presented above, it can be supplied with electronics.

Connect all elements of the workstation equipment as per the block diagram and descriptions showed on devices and cables.

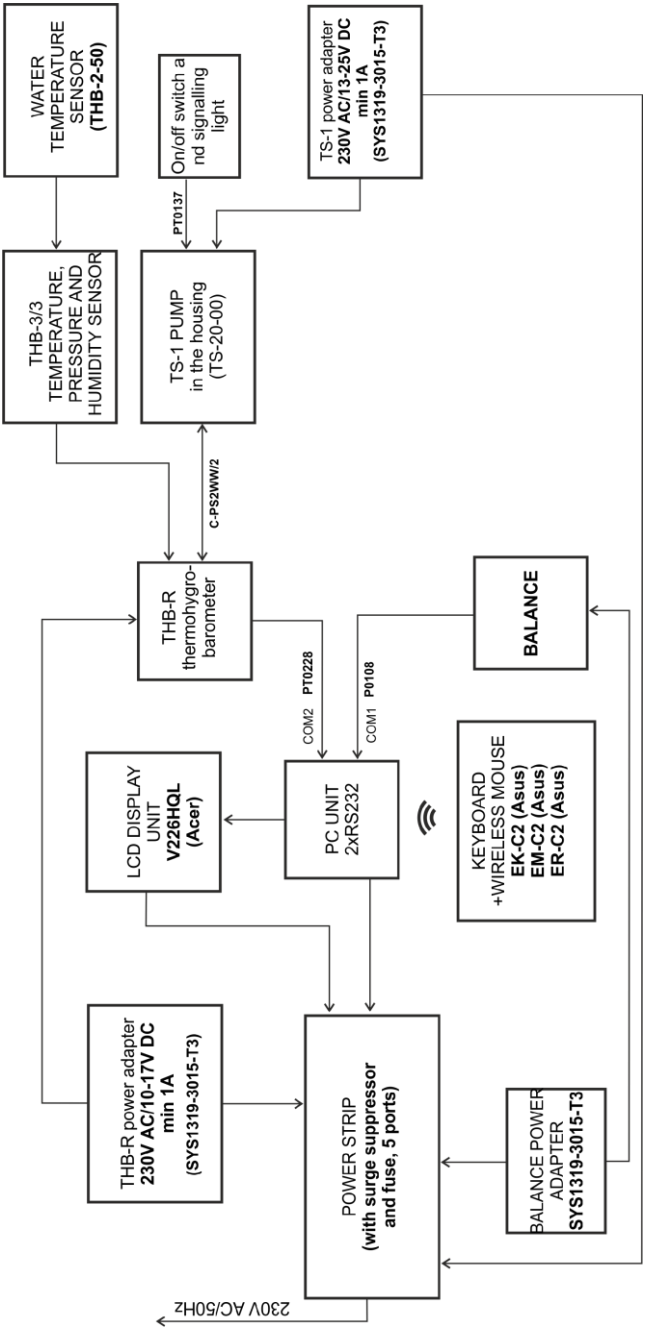

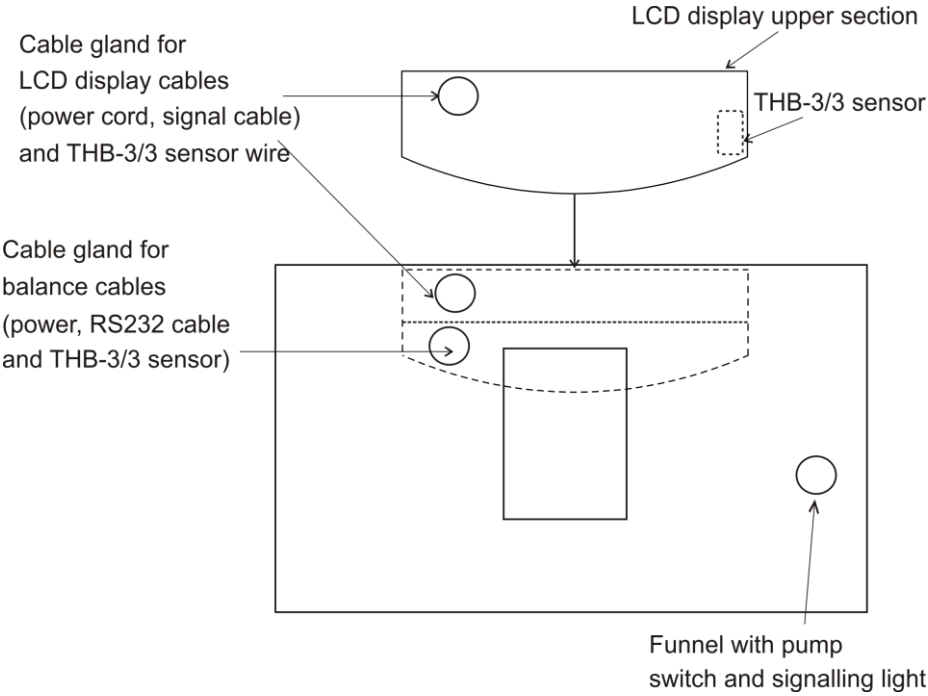

Arrangement of cables

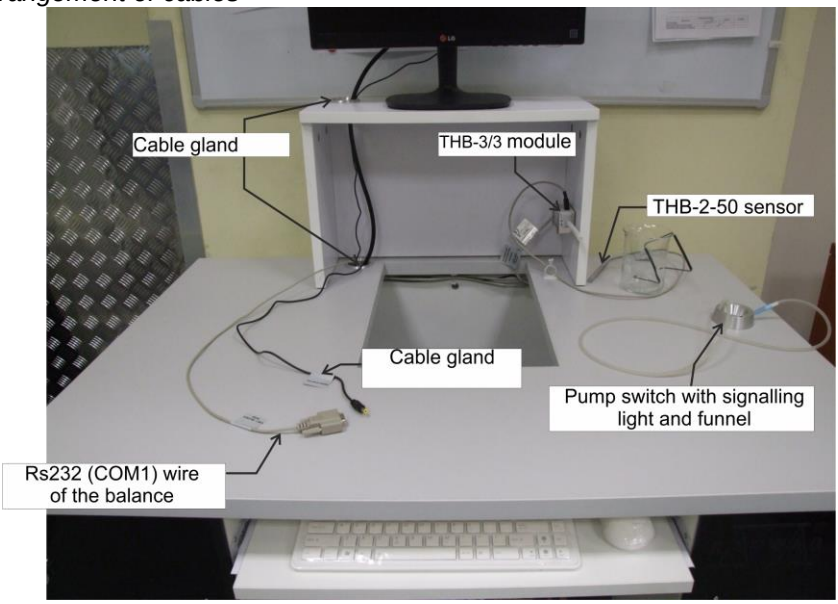

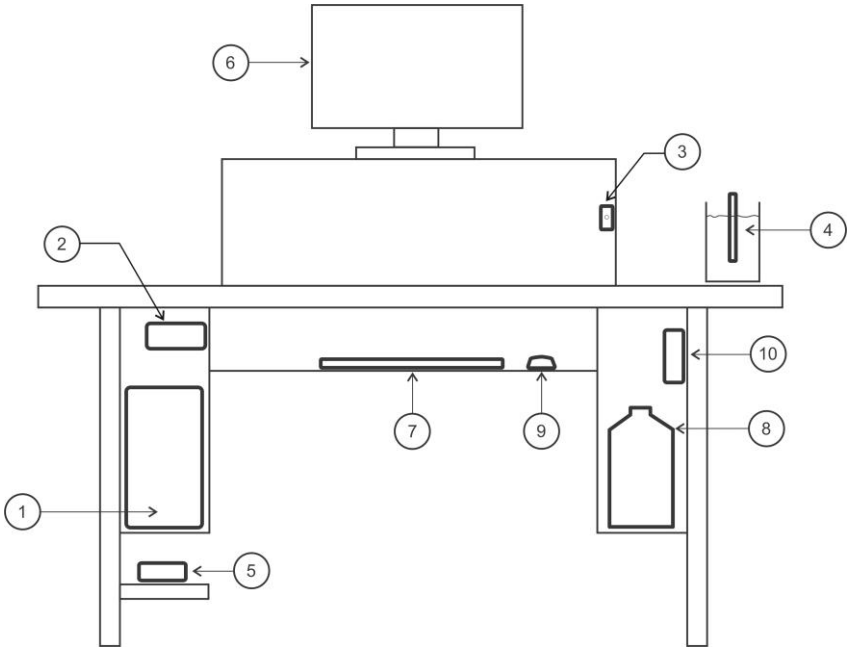

1.	PC unit
2.	THB-R ambient conditions recorder
3.	THB-3/3 thermohygrobarometer
4.	THB-2-50 immersion sensor
5.	Power strip
6.	LCD display unit
7.	Keyboard
8.	Liquid container
9.	Wireless mouse
10.	Liquid pump

WORKSTATION VIEW (MAIN COMPONENTS):

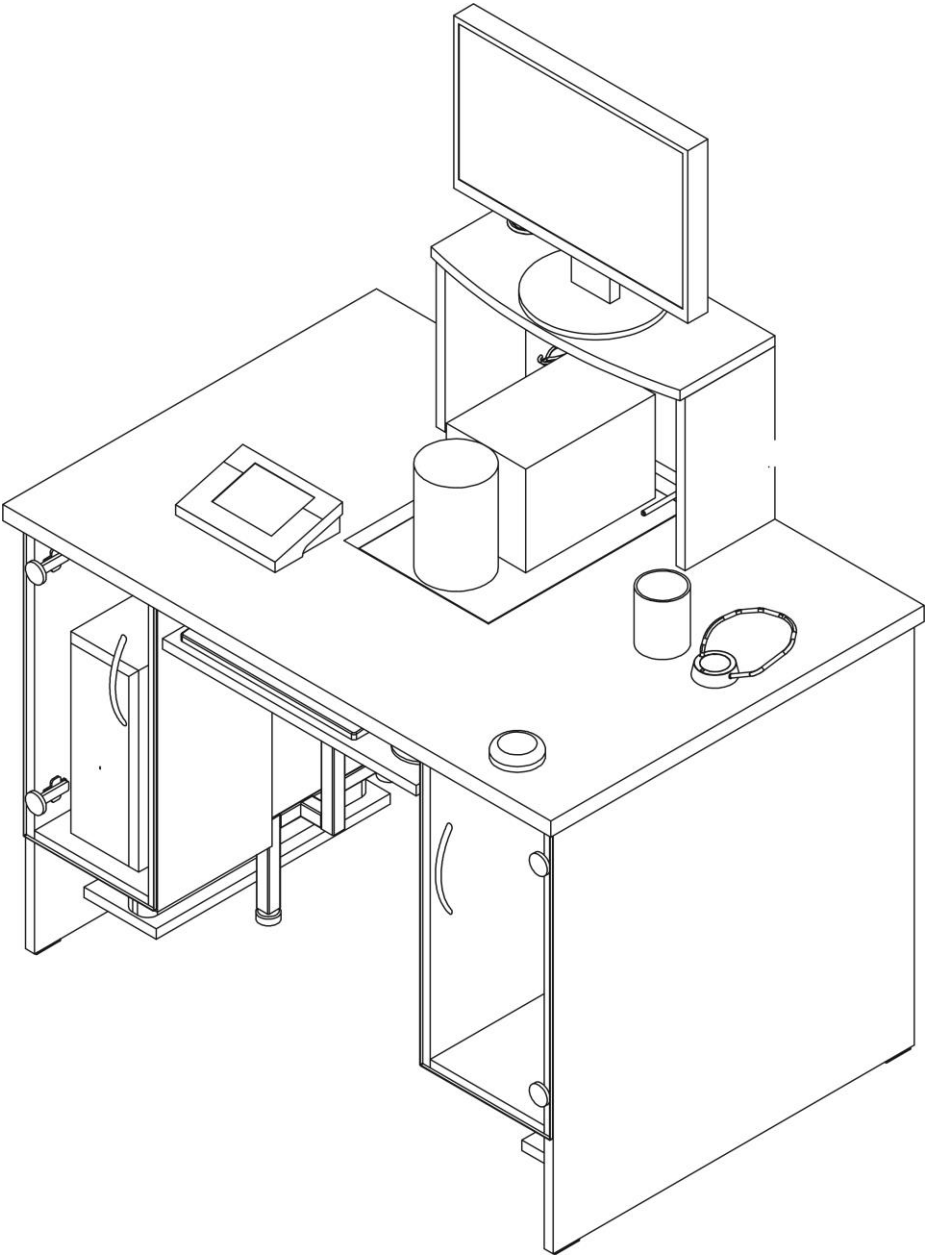

5. SDKP/DUAL WORKSTATION ASSEMBLY

5.1. Setting-up

NOTE: Please remain highly careful when setting items up as such pieces as a stone are heavy and may pose a threat while completing the workstation.

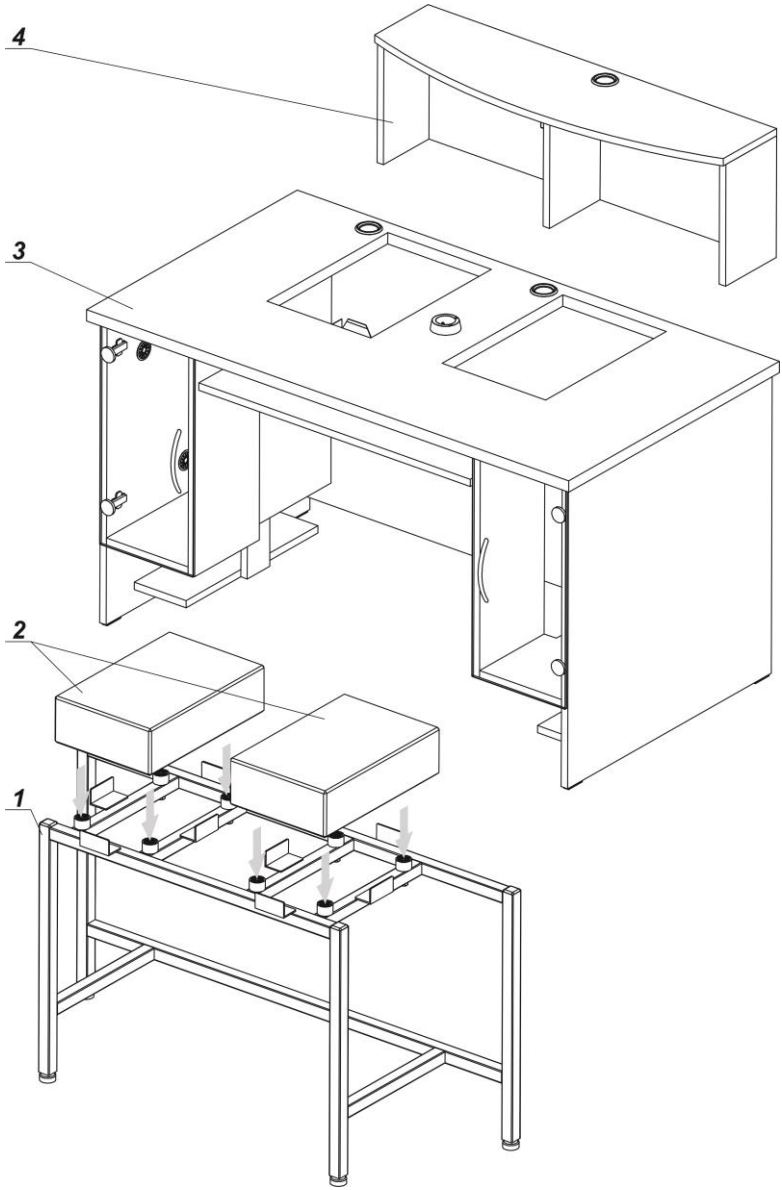

The order of assembly:

1. Position the inner structure (1) in a dedicated spot.
2. Put stone tops (2) on shock absorbers of the structure so that the stones do not touch side guards.
3. Install the outer structure (3) of the station.

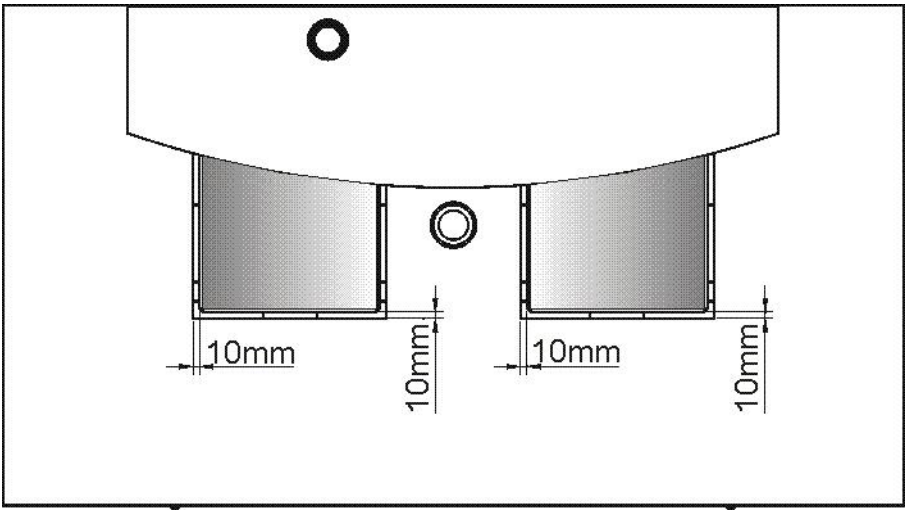

Remember to make sure the stone top is evenly distanced from edges of a measuring table (around 10 mm from each side).

4. Install the base of the display unit (4)
5. Install the water container in the left cabinet of the station (the container must be installed in the holder inside the cabinet). Connect flexible wires to the container.

Once the workstation has been prepared in the way presented above, it can be supplied with electronics.

Connect all pieces of the workstation equipment as per the block diagram and descriptions showed on the device and cables.

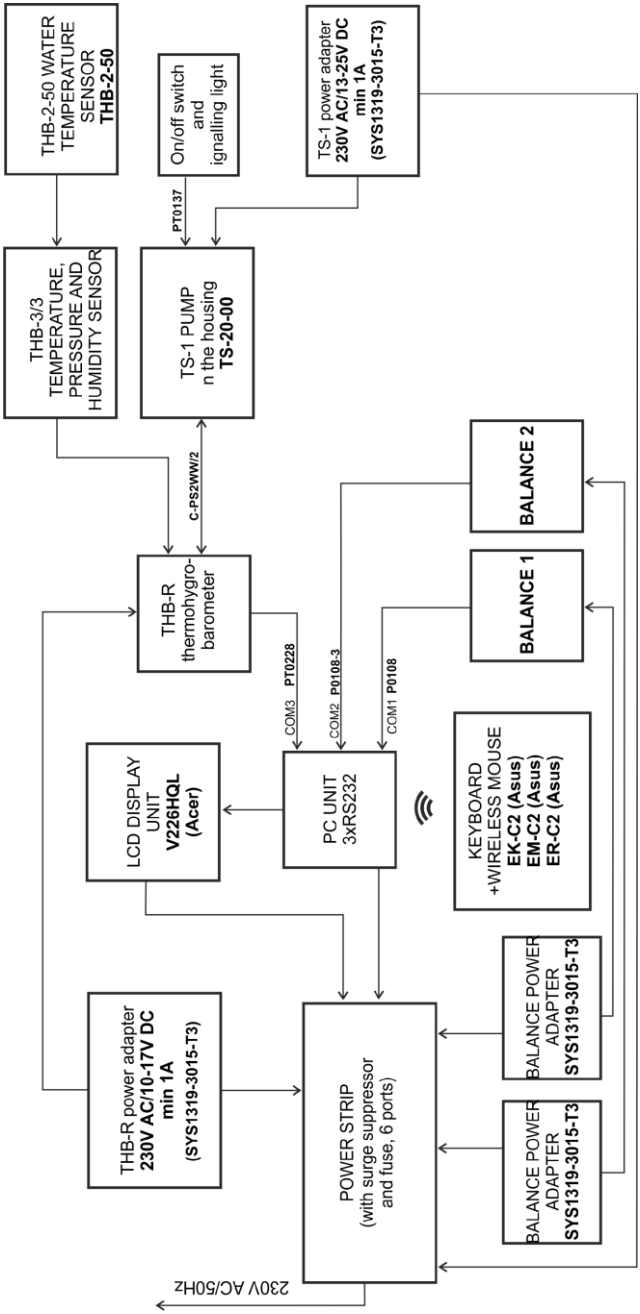

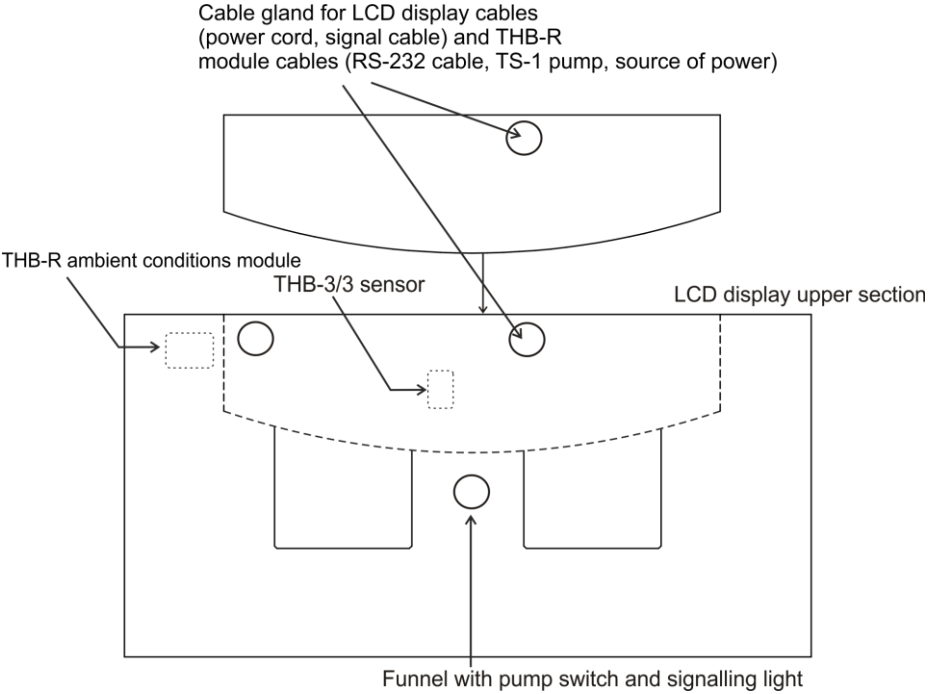

Arrangement of cables

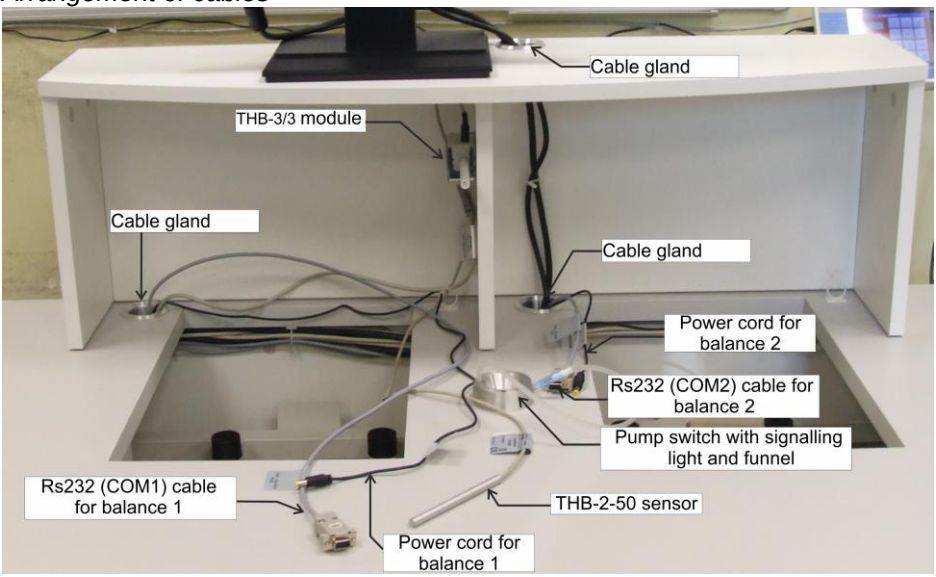

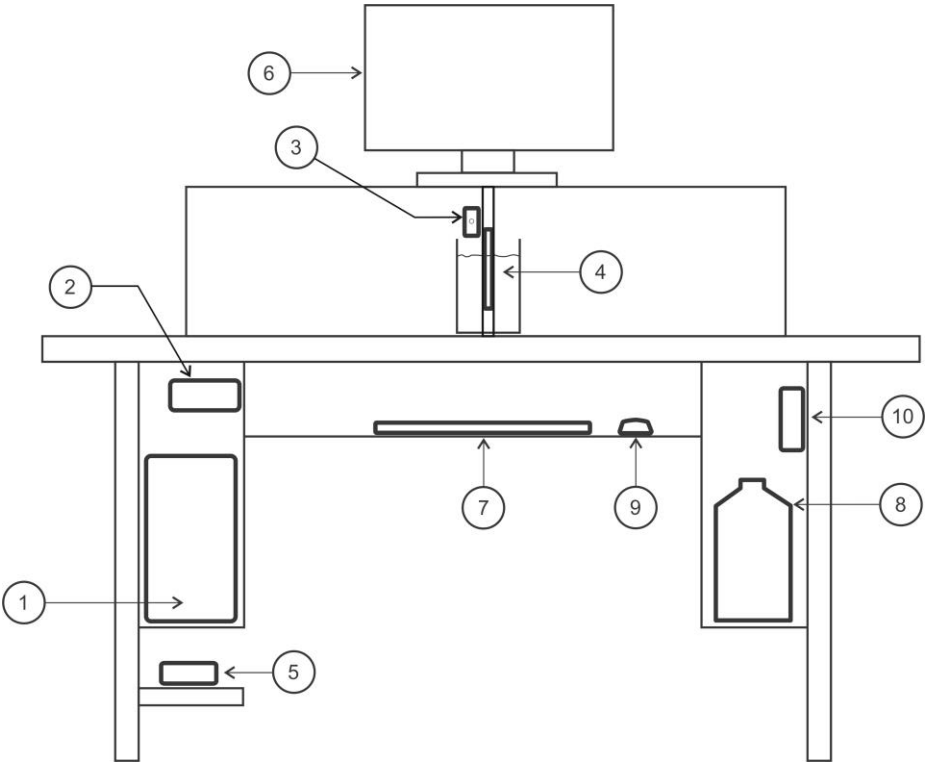

1.	PC unit
2.	THB-R ambient conditions recorder
3.	THB-3/3 thermohygrobarometer
4.	THB-2-50 immersion sensor
5.	Power strip
6.	LCD display unit
7.	Keyboard
8.	Liquid container
9.	Wireless mouse
10.	Liquid pump

WORKSTATION VIEW (MAIN COMPONENTS):

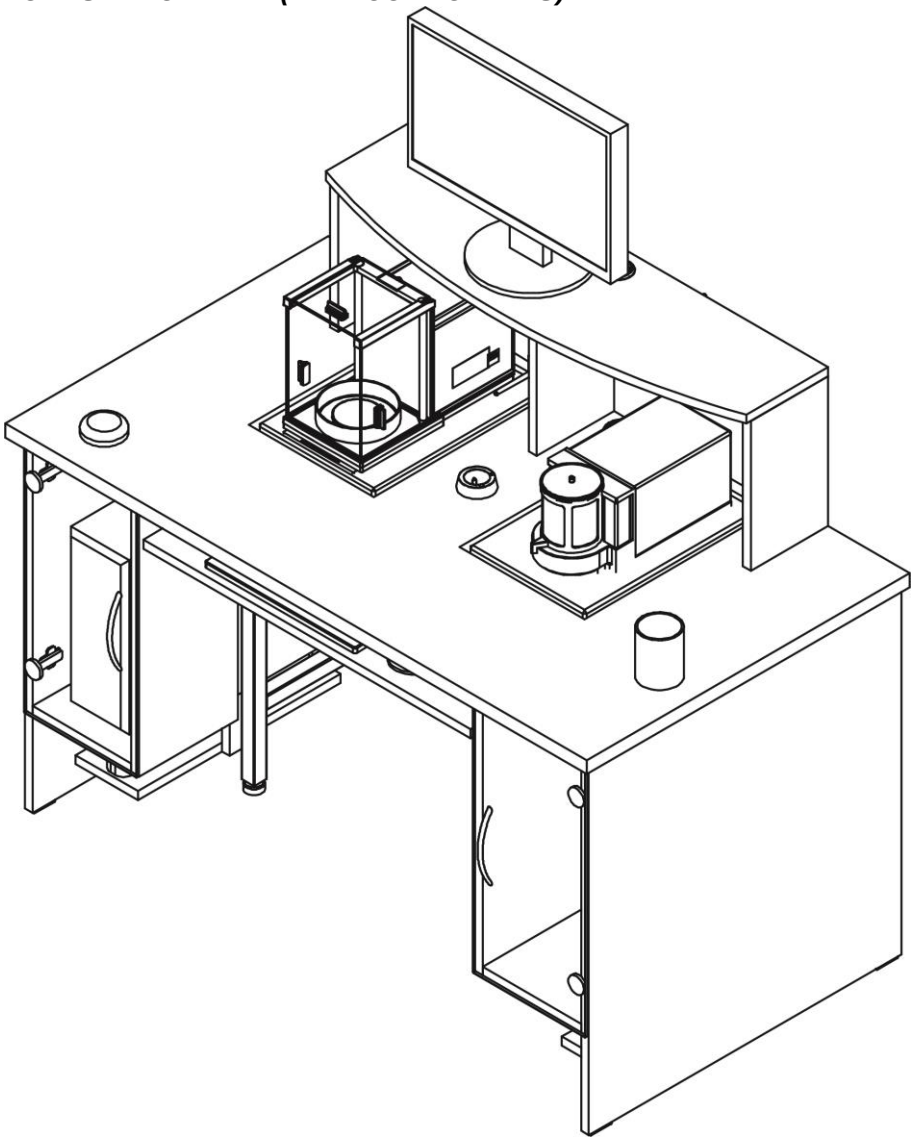

6. CLEANING

Before you start cleaning, dismantle the balance and display unit.

Workstation cleaning – furniture board parts

The weighing workstation can be cleaned using the microfibre cloth that has been saturated with water and soap or dishwashing liquid, with no abrasive substances.

After removing dirt from the surface, polish the surfaces with a dry cloth to make them dry and glow.

Granite stone cleaning:

The granite top can be cleaned using the microfibre cloth that has been saturated with small amount of water and soft dishwashing liquid or special granite-washing agent with a neutral pH. Do not use abrasive agents.

To clean it, gently move the cloth around the surface making simple movements. Never make circular movements with the cloth! It is forbidden to use rough items to clean the surface of the stone, e.g. a wire brush.

After removing dirt from the surface of the stone, polish the surface with a dry cloth to make it dry and glow.

Stainless steel element cleaning

While cleaning stainless steel elements, follow the table below. The table shows types of pollutants and methods of removing them.

Fingerprints	Clean with a spirit or thinner. Rinse with pure water and wipe it dry.
Oils, fats, greases	Clean with organic solvents, and then wash with warm water and soap or soft detergent. Rinse with pure water and wipe it dry.
Stains and temperature tarnish	Clean gently with a soft scouring detergent, follow the direction of the surface structure. Rinse with pure water and wipe it dry.
Strong discolourations	Clean gently in accordance with the direction of the surface structure. Rinse with pure water and wipe it dry.
Traces of rust	Moisten with an oxalic acid solution and leave for about 15-20 minutes. Then wash it with warm water and soap or soft detergent. Rinse with pure water and wipe it dry.
Paints	Clean with paint solvent and then wash with warm water and soap or soft detergent. Rinse with pure water and wipe it dry.
Surface scratches	Polish gently with an unwoven cloth (iron-free) as per the direction of the surface structure. Then wash with a soft scouring detergent. Rinse with pure water and wipe it dry.

Glass element cleaning

Depending on the type of dirt, a suitable solvent must be chosen. Never immerse the glass in strong alkaline solutions as the glass may get damaged. It is forbidden to use abrasive agents.

With regard to organic residues, use acetone. Only later can you use water and detergent. As for non-organic residues, use diluted acid solutions (soluble hydrochloric or nitric acid salts) or bases (mostly sodium, ammonium).

ACIDS must be removed with basic solvents (sodium carbonate), while BASES with acidic solvents (mineral acids of various concentration).

In case of stubborn dirt, use a brush and detergent. Do not use the detergents whose particles are large and hard and may therefore scratch the glass.

At the end of the cleaning procedure, carefully rinse the glass with distilled water.

Always use soft brushes with a wooden or plastic grip to avoid scratching. Do not use wire brushes or brushes with a wire core.

The rinsing procedure is required to make sure all soap, detergent and other cleaning agent residues have been removed from glass before it is reinstalled in the balance.

Once the initial cleaning procedure has been completed, glass elements must be washed under running water and eventually distilled water.

It is not advisable to dry the glass with paper towel or under the stream of forced air as it may damage glass elements, fibre or lead to other pollution, which may result in erroneous weighing results.

Do not use electrical dryers for measuring glassware.

After washing, glass elements are usually positioned on the shelf for free drying.

Powder-painted element cleaning

At first initially clean the element under running water or using a large-pore sponge and large amount of water in order to remove loose and major dirt.

Do not use abrasive agents.

Next, using a suitable cloth and water solution and cleaning agents (soap, dishwashing liquid), clean the surface by regularly pressing the cloth against the surface of elements.

Never dry clean only with a detergent as it may lead to damage to the coating. Instead, use a large amount of water or water-cleaning agent solution.

Aluminium element cleaning

To clean aluminium, use products based on natural acids. The following agents may prove perfect: synthetic vinegar, lemon. It is forbidden to use abrasive agents. Do not use rough brushes that may easily scratch the aluminium surface. A soft microfibre cloth will be the best choice.

To clean polished surfaces, make circular movements. After removing dirt from the surface, polish the surface with a dry cloth to make it dry and glow.