USER GUIDE

VX60-Series

Geolux

Distributed by AKRIBIS

Geolux d.o.o. | Ljudevita Gaja 62 | HR-10430 Samobor Croatia | www.geolux-radars.com | geolux@geolux.hr

VX60

Non-Contact Surface Velocity Radar

User Manual

v1.0.0.
May 2026

Copyright ©2026 Geolux d.o.o. All rights reserved.

Starting Point

Thank you for purchasing Geolux VX60 non-contact surface velocity radar! We have put together the experience of our engineers, the domain knowledge of our customers, the enthusiasm of our team, and the manufacturing excellence to deliver this product to you. You may freely rely on our field-proven radar technology. The use of top-quality components, state-of-the-art microwave antenna and advanced signal processing algorithms ensures that Geolux surface velocity radar can be used in various applications and environments. Although we are certain that you are more than capable of connecting the surface velocity radar to your system, we have created this User Manual to assist you in setting up and using Geolux surface velocity radar device. Should there be any questions left unanswered, please feel free to contact us directly.

Geolux d.o.o.
Ljudevita Gaja 62
10430 Samobor
Croatia

E-mail: **geolux@geolux.hr**
Web: **www.geolux-radars.com**

Contents

1. Introduction **4**
2. Device Characteristics **5**
3. Connector Pin-Out **6**
3.1. Serial RS-232 Interface 8
3.2. Serial RS-485 Interface 9
3.3. SDI-12 Interface 10
3.4. Analog 4 – 20 mA Output 11
4. Instrument Mounting **12**
4.1. Installing the Surface 12
4.2. Controlling Radar Beam 14
4.3. Site and Mounting Requirements 16
4.4. Signal-to-Noise Ratio 18
4.5. Rain and Wind 19
4.6. Interference and Multiple Radars 19
4.7. Fogging and Evaporation 19
4.8. Reflections 20
5. Surface Velocity Radar Settings **21**
6. Data Protocols **29**
6.1. NMEA Protocol (RS-232) 29
6.2. Servicing Protocol (RS-232) 31
6.3. Modbus Protocol (RS-485) 37
6.4. SDI-12 Protocol 46
7. Geolux Instrument Configurator **57**
8. Troubleshooting **64**
A. Appendix A: Mechanical Assembly **67**
B. Appendix B: Holder Accessory Assembly **68**

1 Introduction

The Geolux VX60 Surface Velocity Radar uses advanced radar technology to accurately measure surface flow velocity without contact with the water. The sensor operates without touching the water surface, so the installation is quick and simple. The instrument is mounted above the water, and only minimal maintenance is required.

The VX60 operates by transmitting a modulated electromagnetic wave in the 60 GHz frequency range (V-band). The transmitted wave reflects from the moving water surface and returns to the sensor. The instrument measures the frequency shift of the reflected signal, which is caused both by the motion of the water and the radar wave modulation. This measurement method is called Frequency-Modulated Continuous Wave (FMCW) radar. Using advanced signal processing techniques, the VX60 analyzes the returned radar signal to determine the distance to the reflecting surface and the velocity of the moving surface. Based on this information, the instrument creates a range-Doppler map, which shows the velocity of objects at different distances from the sensor.

Unlike simple Doppler radars that transmit a non-modulated signal and measure only a single Doppler shift, FMCW radar can distinguish between moving objects at different distances. This is especially important in surface velocity monitoring applications. For example, during rainfall, the VX60 can clearly distinguish between reflections from raindrops and reflections from the river surface. Conventional Doppler radars cannot fundamentally separate these signals and must rely on heuristic filtering algorithms to reduce rain effects.

The VX60 measures surface velocities from 0.020 m/s to 16.000 m/s, with a resolution of 0.001 m/s.

The instrument also includes an integrated tilt sensor which continuously measures the mounting angle of the device, and the measured surface velocity is automatically corrected using cosine compensation based on the detected tilt angle.

2 Device Characteristics

Table 1. Technical specifications

Radar Type	V-band 60 GHz FMCW radar
Operating Frequency	57– 64 GHz
Detection Distance	Up to 30 m above the water surface
Velocity Measurement Range	0.02 – 16 m/s
Resolution	0.001 m/s
Accuracy	±1% of measured value
Sampling Rate	10 samples per second (sps)
IP Rating	IP68
Data Interfaces	RS-232 / NMEA RS-485 / Modbus-RTU SDI-12 Analog 4-20 mA
Connector	M12 circular, 12-pin
Input Voltage	9 – 27 VDC
Power Consumption	1000 mW (operational) 30 mW (SDI-12 sleep mode)
Maximal Current	< 500 mA
Operating Temperature Range	-40°C to +85°C
Operating Humidity Range	0 – 100% RH
Storage Temperature Range	-60°C to +105°C

3 Connector **Pin-Out**

The surface velocity radar is equipped with a robust IP68-rated circular M12 connector with 12 pins. The mating cable is supplied with the instrument. All communication and output interfaces are available on every model. These include RS-232, RS-485, SDI-12, and analog 4–20 mA. All interfaces can operate simultaneously, allowing parallel communication and data output. The exception is when the device is configured to operate in automatic SDI-12 sleep mode, when the other interfaces will be disabled, and only SDI-12 will be active.
The connector and cable are shown in Picture 1. The connector pins in the drawing are displayed from the front view. A detailed description of each pin is provided in Table 2.

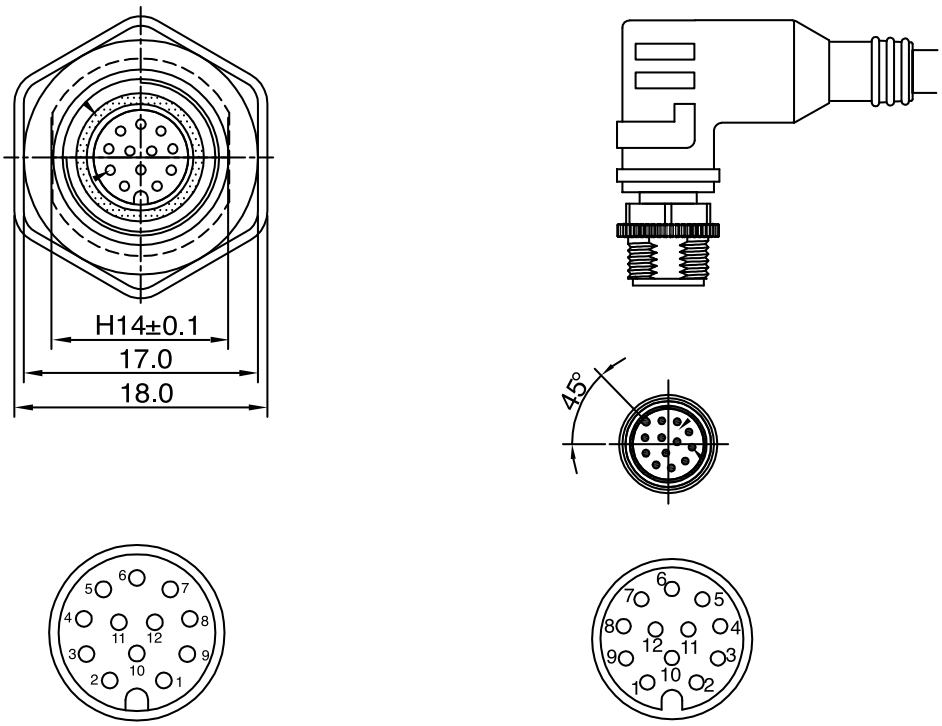

Picture 1. Connector and cable drawing

Table 2. Connector pin descriptions

Pin No.	Wire Color		Pin Name	Pin Description
1	White		Power Ground	Connect to the negative (–) terminal of the power supply.
2	Brown		Power Input	Connect to the positive (+) terminal of the power supply (9–27 VDC, >500 mA).
3	Green		RS232 TX	RS-232 transmit data signal (device → host).
4	Yellow		RS232 RX	RS-232 receive data signal (host → device).
5	Grey		Signal Ground	Signal ground reference for RS-232 or SDI-12 communication.
6	Pink		CAN H	CAN 2.0 high signal line.
7	Blue		CAN L	CAN 2.0 low signal line.
8	Bright Red		4-20 mA Loop +	Positive terminal of the active 4–20 mA output.
9	Orange		RS485 B-	RS-485 data low (inverting) signal.
10	Dark Red		RS485 A+	RS-485 data high (non-inverting) signal.
11	Black		SDI-12 Data	SDI-12 communication data line.
12	Purple		4-20 mA Loop -	Negative terminal of the active 4–20 mA output.
13	Clear		Shield	Cable shield. Connect to grounding.

3.1. Serial **RS-232 Interface**

The instrument includes a standard full-duplex RS-232 serial interface. The voltage levels are fully compliant with the RS-232 standard and allow direct connection to a PC or other embedded devices that support RS-232 communication.

When connecting the instrument to a standard DB-9 PC connector, use the following wiring:

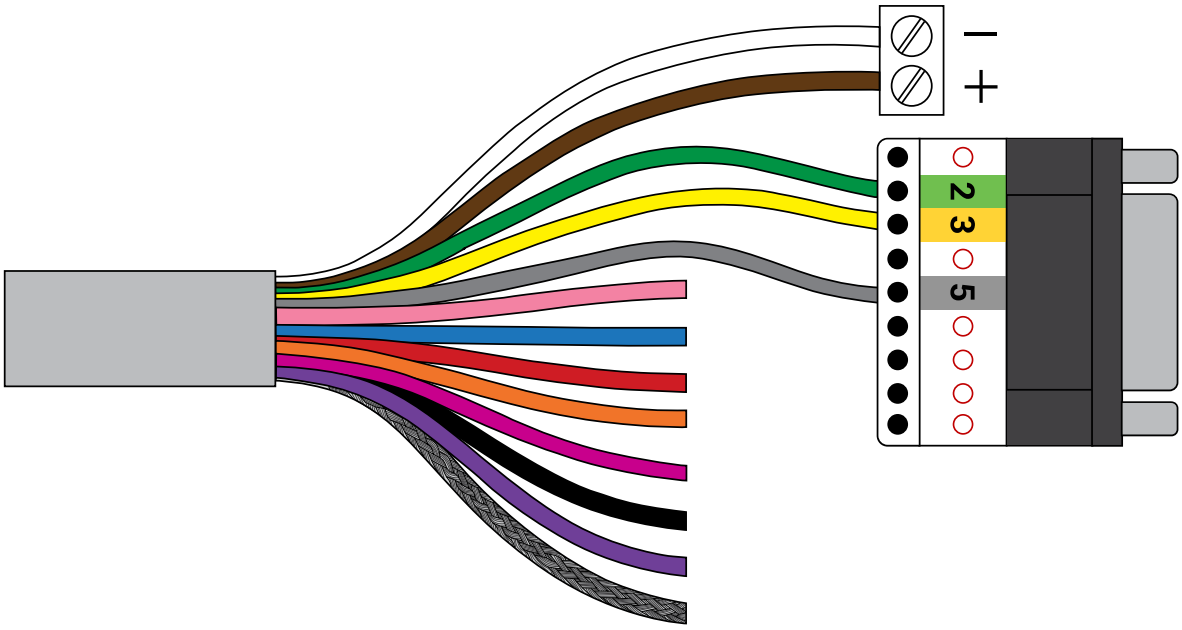

Picture 2. RS-232 connection

- Green wire - RS-232 TxD → DB-9 pin 2
- Yellow wire - RS-232 RxD → DB-9 pin 3
- Grey wire - Signal GND → DB-9 pin 5. Connection of the signal ground (GND) is required for proper operation of the serial interface.

For computers without a native RS-232 port, Geolux recommends using the Waveshare USB to RS232/485/TTL converter:
https://www.waveshare.com/catalog/product/view/id/3629/s/usb-to-rs232-485-ttl/category/37/

Serial RS-232 interface is used for direct connection of a single surface velocity radar unit with the computer. The serial interface is used both for retrieving live flow measurements and for configuration of the surface velocity radar device. Geolux provides a PC application for unit configuration and flow monitoring free of charge. Default communication parameters are:

- Bitrate: 115200 bps
- Data bits: 8
- Stop bits: 1
- Parity: None

A NMEA-like communication protocol is used to deliver flow measurements over RS-232 interface. Detailed description of the protocol is given in the Chapter 6.1. of this user manual.

3.2. Serial **RS-485 Interface**

The instrument includes a standard industrial half-duplex RS-485 communication interface. The interface is internally protected against short circuits and overvoltage.

The RS-485 interface is connected using two wires:

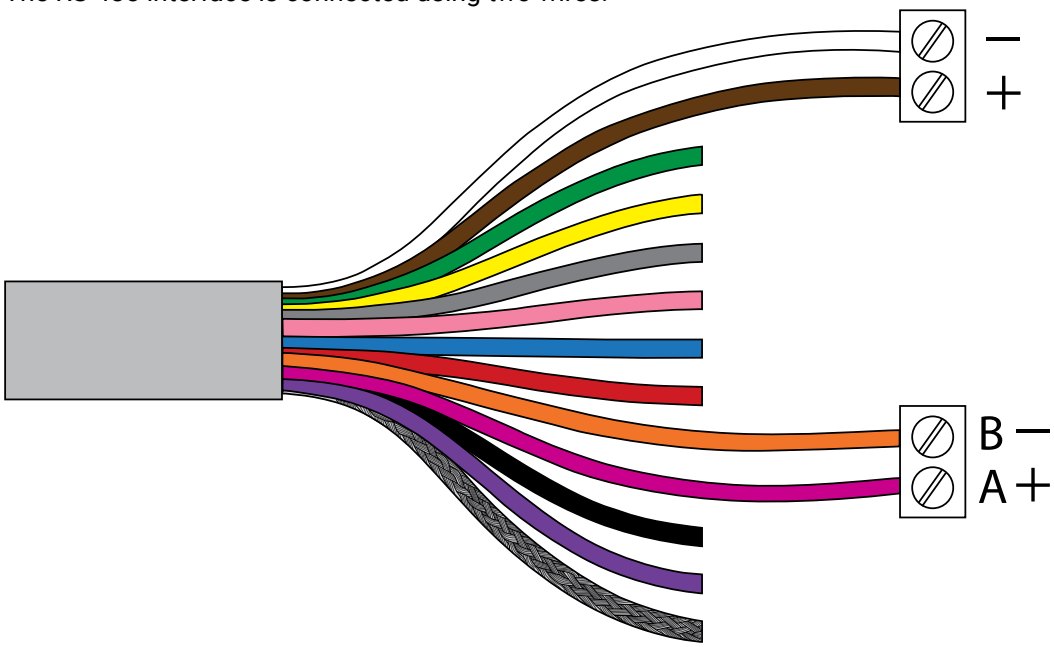

Picture 3. RS-485 connection

- Dark red wire – RS-485 A+ signal
- Orange wire – RS-485 B- signal

Important: Carefully identify the dark red wire used for A+. The cable also contains a bright red wire and a pink wire, which serve different functions. Ensure the correct wire is selected before making the connection.

In some installations, an additional connection of signal GND (grey wire) may be required. The need for a ground connection depends on the receiving device. Always consult the receiver or data logger specification to confirm the correct wiring.

Serial RS-485 interface is used for connecting multiple surface velocity radars to a single data logger. RS-485 interface uses a different protocol than the protocol used over RS-232 interface, in order to allow multiple surface velocity radars connected on a single RS-485 bus. The main difference from the protocol used over RS-232 interface is that the flow measurements are not reported automatically, but are instead reported only after being requested by the master device (data logger unit). Geolux VX60 uses industry-standard Modbus protocol for data exchange over RS-485 interface. The detailed description of the protocol is given in the Chapter 6.3. of this user manual.

Default communication parameters are:

- Bitrate: 9600 bps
- Data bits: 8
- Stop bits: 1
- Parity: Even
- Device ID: 1

3.3. SDI-12 Interface

The VX60 also supports the SDI-12 (Serial Data Interface at 1200 baud) protocol, which is widely used in environmental monitoring and hydrological measurement systems. SDI-12 communication enables connection to standard environmental data loggers using a single data line. The protocol supports low-power operation, making it suitable for battery or solar-powered installations.

For SDI-12 communication, connect the black wire (SDI-12 Data) to the SDI-12 data terminal of the data logger and the grey wire (Signal Ground) to the logger's signal ground (GND).

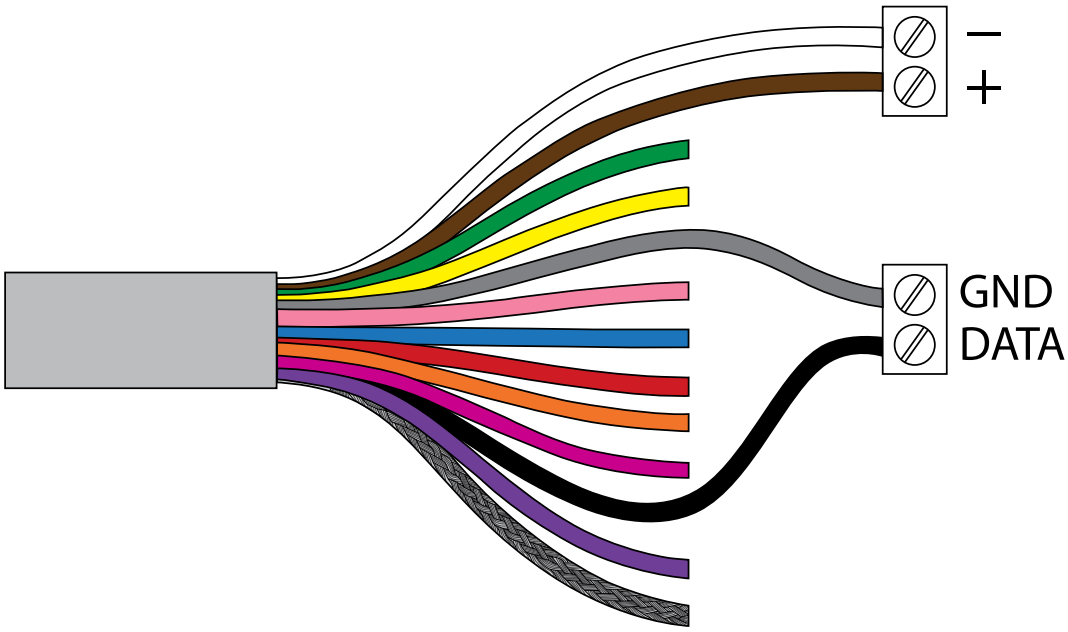

Picture 4. SDI-12 connection

- Black wire – SDI-12 data
- Grey wire - signal ground

The instrument supports standard SDI-12 measurement commands as well as extended and custom commands for configuration, diagnostics, and service functions.

A complete list of supported SDI-12 commands and response formats is provided in Chapter 6.4. of this manual.

3.4. **Analog 4** – 20 mA Output

The VX60 surface velocity radar is equipped with an analog 4–20 mA output for integration with PLCs, SCADA systems, and other industrial control equipment. The output is implemented as a 4-wire active current output (not a 2-wire loop-powered type). This means the device provides the current signal directly and requires a separate power supply connection.

The 4–20 mA output must be configured in the device settings to define the linear relationship between the measured velocity and the output current. The user must set:

- Minimum measurement value → corresponding to 4 mA
- Maximum measurement value → corresponding to 20 mA

The output signal is linearly scaled between these two configured points.

Wiring identification:

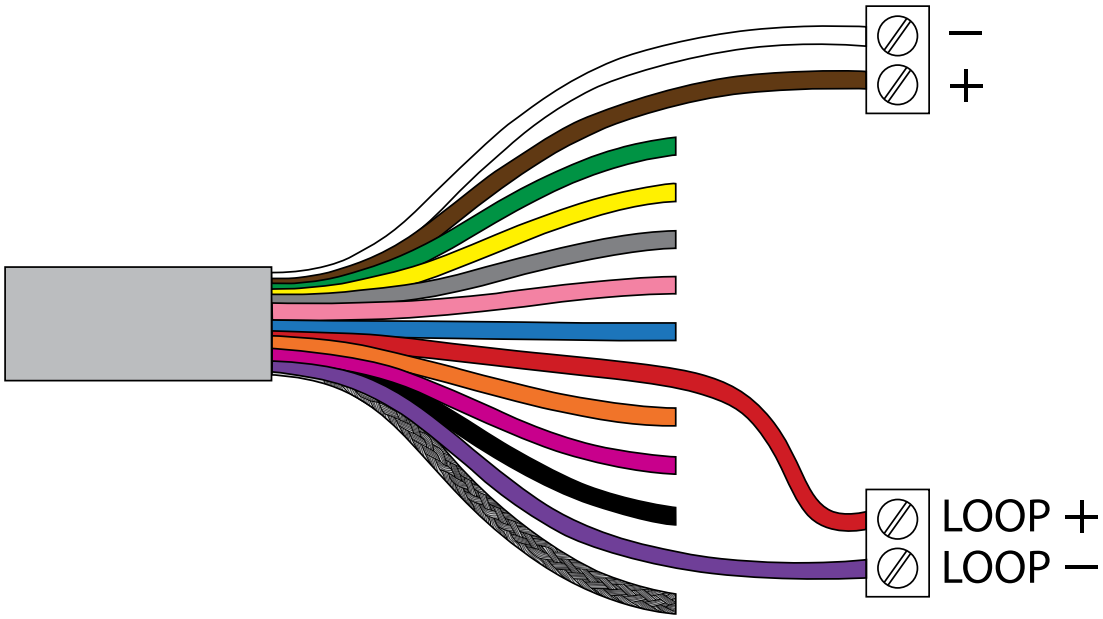

Picture 5. Analog 4-20 mA connection

- Bright red wire – 4–20 mA positive (+)
- Purple wire – 4–20 mA negative (–)

During sensor initialization, if low power mode is activated, or during sensor errors (such as tilt angle which is too big), the device will output 0 mA to differentiate between lowest measurement at 4 mA.

4 Installing the Surface Velocity Radar

The surface velocity radar must be installed above the water surface and directed toward the water at an angle. The recommended vertical installation angle is 60° relative to the horizontal plane.

The recommended minimum installation height is 1 meter above the water surface. The theoretical minimum is 20 centimeters above the water surface. The maximum installation height is 30 meters above the water. For optimal performance, the sensor should be positioned above the deepest part of the river channel, to ensure that measurements remain available even during low water levels.

Pictures 6. and 7. show the correct positioning of the radar in relation to the water surface.

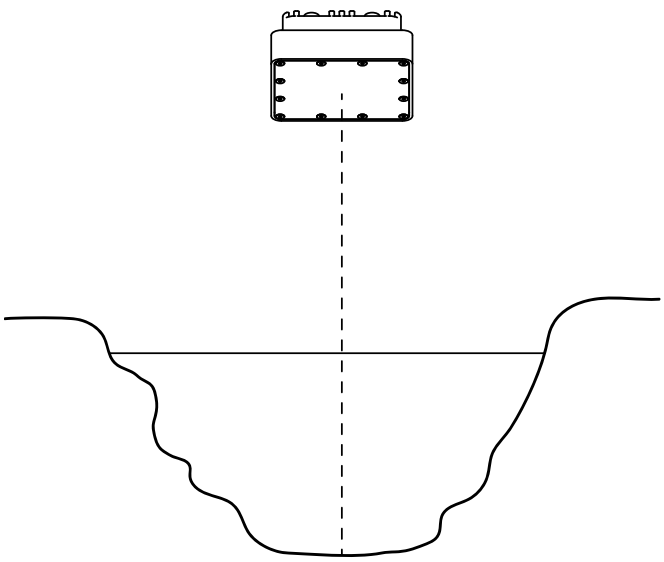

Picture 6. Front view of the radar mounting

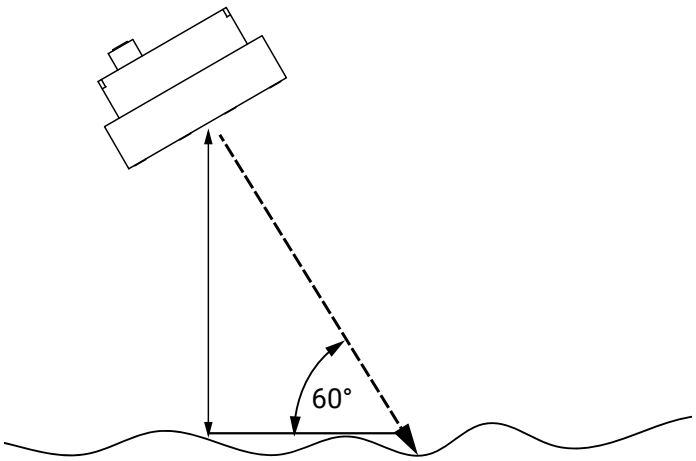

Picture 7. Side view of the radar mounting - maintain 60° relative to horizontal plane

4.1. Instrument Mounting

Proper site selection and correct installation are essential to achieve the specified measurement accuracy.

The tilt angle relative to the horizontal plane should be between 45° and 65°. Tilt angle of 60° is recommended for optimal performance. If the instrument is properly mounted to a vertical pole or structure, tilt angle can be achieved with standard installation tolerances of ±5°.

For best results, the instrument should be aligned parallel to the direction of water flow. Any deviation from the flow direction will reduce the measured velocity value. The measured value will always be lower than the actual surface velocity if the instrument is not properly aligned. It is recommended to point the instrument upstream, so the water flows toward the sensor.

The installation height and tilt angle determine the size and position of the radar measurement area on the water surface. The radar beam covers an elliptical area on the water surface, and the instrument reports the average surface velocity within this area. The dimensions of the ellipse depend on the installation height of the instrument above the water surface. The formulas used to calculate the ellipse diameters, as well as tables showing the diameters for different installation heights, are provided below.

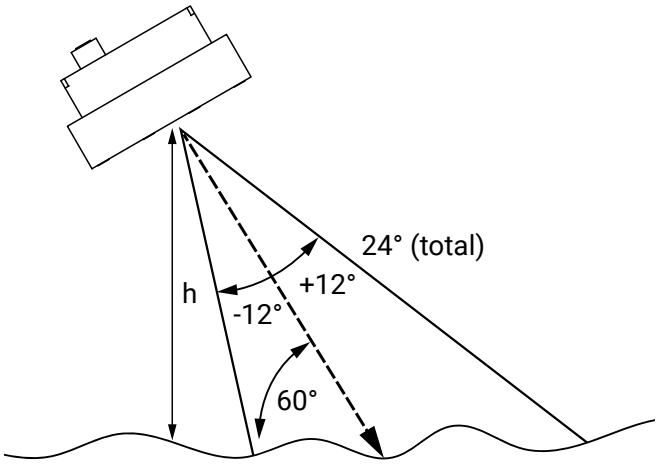

Picture 8. Radar beam width in the elevation plane

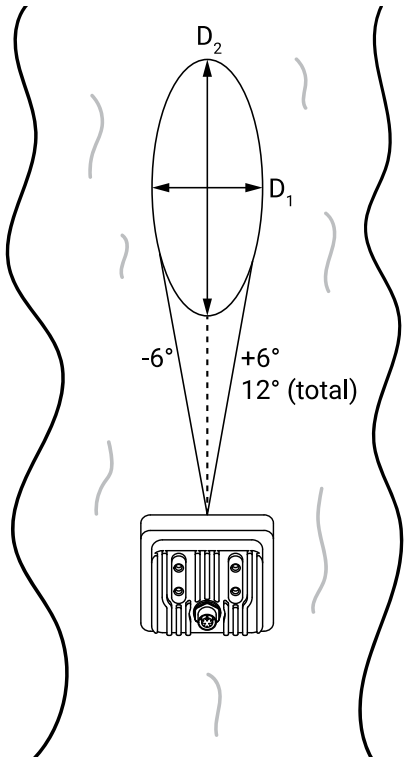

Picture 9. Radar beam width in the azimuth plane

The D1 and D2 diameters can be determined by the following equations:

$$D_1 = 2 * h * \frac{\tan(6°)}{\sin(60°)}$$

$$D_2 = h * [\tan(42°) - \tan(18°)]$$

Table 3. Radar beam width by installation height (metric)

Height (m)	D1 (m)	D2 (m)
1	0.24	0.58
2	0.48	1.15
5	1.21	2.88
10	2.43	5.75
20	4.85	11.51
30	7.28	17.26

Table 4. Radar beam width by installation height (imperial)

Height (ft)	D1 (ft)	D2 (ft)
5	1.21	2.88
10	2.43	5.75
20	4.85	11.51
30	7.28	17.26
60	14.56	34.53
90	21.84	51.80

4.2. Controlling **Radar Beam**

Unlike traditional Doppler-based radars, the VX60 uses frequency-modulated technology that enables advanced control of the effective measurement area on the water surface.

The previous section describes the maximum radar beam footprint, which is defined by the antenna geometry and installation conditions. However, the VX60 does not need to use the entire footprint. Through modulation control and signal processing, the instrument can limit measurements to a selected portion of that area. This allows the user to focus on the most representative flow conditions and avoid disturbed or non-uniform regions.

The VX60 provides two configurable parameters for adjusting the measurement area:

Beam Width

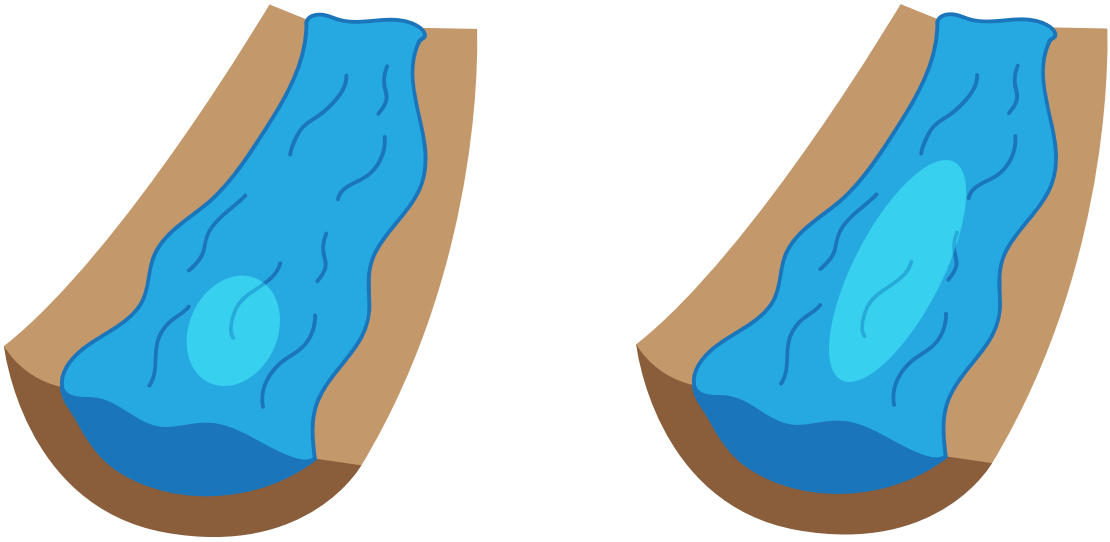

Picture 10. Radar beam width

This parameter controls the size of the measurement area in the elevation direction (i.e., effectively reduces the D_2 diameter of the ellipse).

Available options:

- **Wide** – uses a larger portion of the radar beam; suitable for uniform flow conditions
- **Narrow** – restricts measurements to a smaller, more focused region; recommended when flow disturbances are present and a more stable region must be isolated

Beam Offset

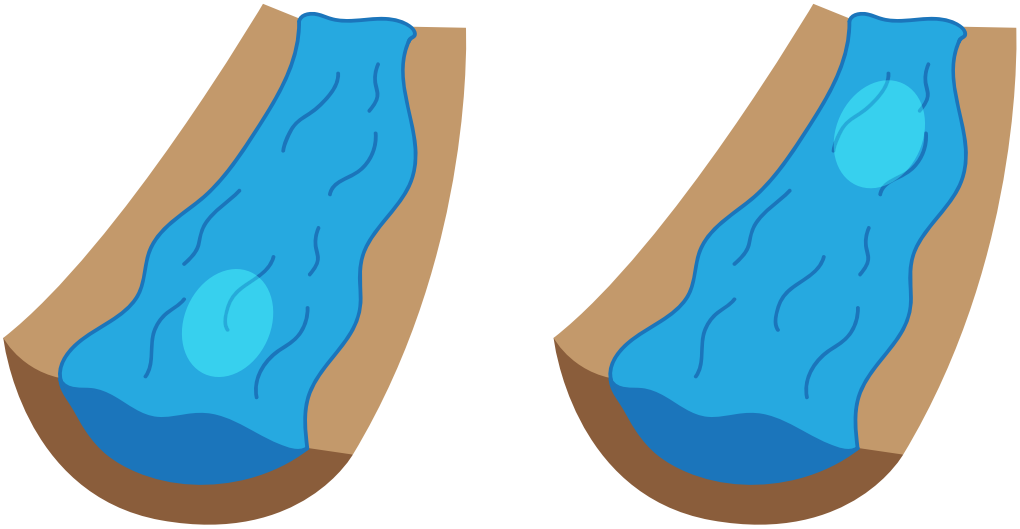

Picture 11. Radar beam offset

This parameter defines the position of the measurement area within the overall radar footprint. It allows the user to shift the active measurement zone along the flow direction.

Available options:

- **Near** – measurement area is closer to the sensor
- **Far** – measurement area is further away from the sensor

The Picture 12 shows the effect of radar beam parameters on the active scanning area on the water surface.

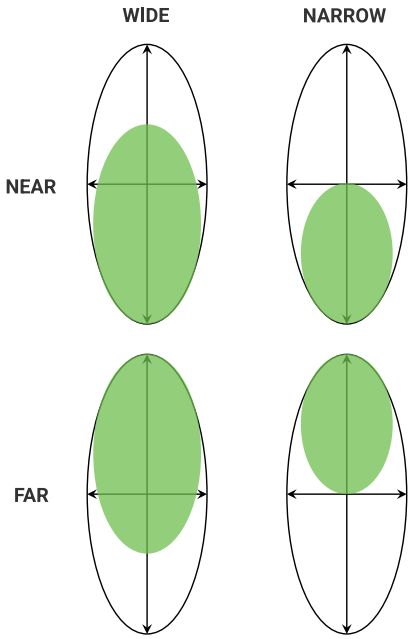

Picture 12. Effect of beam parameters on active scanning area

In real-world installations, flow conditions are often non-uniform. Turbulence, obstacles, or channel geometry can create areas where velocity measurements are not representative of the average surface flow. By combining **Beam Width** and **Beam Offset**, the VX60 allows the user to target the most stable portion of the flow.

Example 1 – Upstream cascade or turbulence away from the sensor

Disturbance located further from the mounting point.
Recommended settings:

- **Beam Width:** Narrow
- **Beam Offset:** Near

Example 2 – Turbulence near a bridge pier or mounting structure

Disturbance located close to the sensor.
Recommended settings:

- **Beam Width:** Narrow
- **Beam Offset:** Far

Example 3 – No disturbace or turbulence

The water flow is uniform.
Recommended settings:

- **Beam Width:** Wide
- **Beam Offset:** Near

4.3. **Site and Mounting** Requirements

The measurement area must be free of obstacles, contain no vegetation, be free of rocks, sand deposits, cascades or waterfalls, must not include bridge structures or other fixed elements, and there must be no vegetation or objects between the radar and the water surface, as this can significantly affect measurement accuracy.

The mounting structure used to hold the instrument, such as a pole, bridge railing, or similar support, must be mechanically stable, free of vibrations, and withstand wind and environmental loads. Vibrations can negatively affect measurement stability and accuracy.

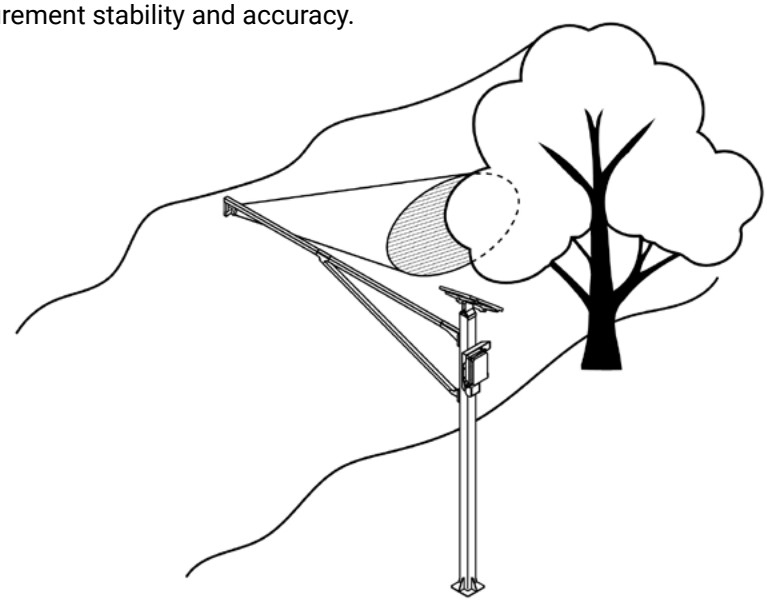

Picture 13. Ensure the radar beam is not obstructed

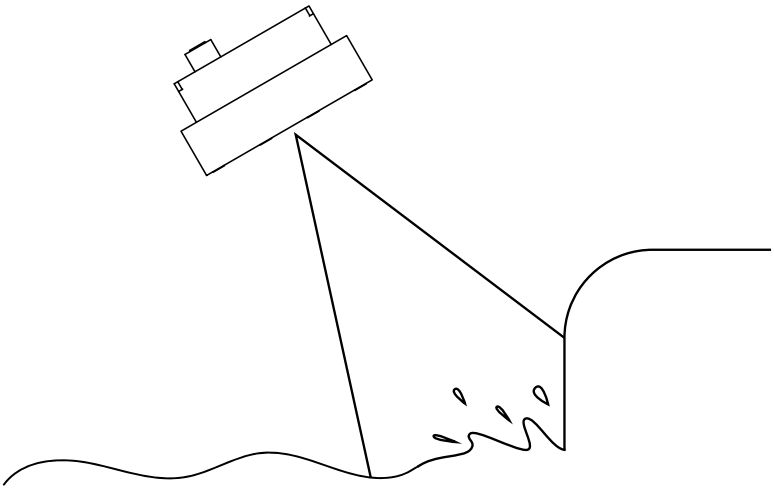

Picture 14. Waterfalls/cascades must be avoided

The instrument must be aligned with the direction of water flow. Proper alignment ensures that the radar measures the true surface velocity of the moving water.

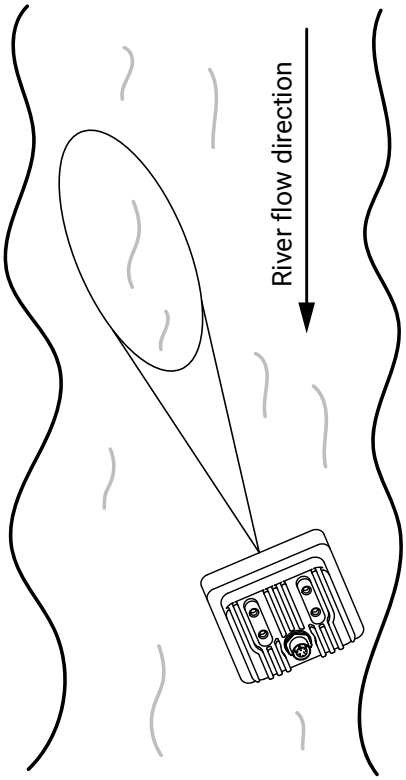

Picture 15. The instrument must be aligned with water flow direction

For optimal measurement accuracy, install the instrument in a section of the river where the flow is uniform and stable. Avoid locations with channel bends or sharp curvatures, tributaries entering the measurement area, sudden widening or narrowing of the channel, and highly turbulent flow. As a general guideline, the minimum distance between the sensor location and any disturbance (such as a tributary, cascade, or channel bend) should be at least four times the width of the river.

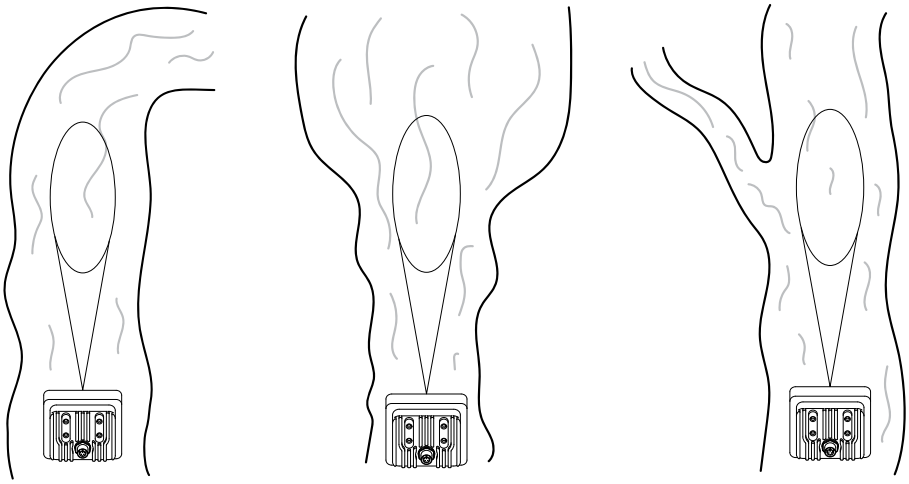

Picture 16. Avoid channel sections where the flow is not uniform

The VX60 uses advanced signal processing and Kalman filtering with physical modeling of water flow. This ensures stable measurements even under turbulent conditions. Moderate surface waviness improves radar signal reflection and measurement quality. In cases of strong turbulence, increased fluctuations in measured values can occur which may result in reduced accuracy of the measurement. If strong turbulence is expected at the monitoring site, it is recommended to set the radar filter length to 60 seconds or higher.

4.4. Signal-to-Noise Ratio

The SNR (Signal-to-Noise Ratio) indicator represents the ratio between the useful radar signal reflected from the moving water surface and the background noise detected by the radar receiver. In surface velocity radar applications, SNR is a key quality parameter that indicates the reliability of the measured velocity. A higher SNR value means that the reflected signal from the water surface is significantly stronger than the noise floor, resulting in more accurate and stable measurements. Conversely, a low SNR indicates that the useful signal is weak compared to background noise, which may reduce measurement stability or increase uncertainty. SNR is typically influenced by installation geometry, mounting height, surface conditions, and environmental factors. Smooth, uniform flow with well-defined surface ripples generally produces stronger reflections and higher SNR values. Very calm water surfaces may reduce signal strength because fewer surface irregularities are present to reflect the radar signal. Excessive turbulence, splashing, or debris can also affect signal consistency, sometimes lowering the effective SNR. Proper positioning and installation of the radar significantly improves signal strength. Ensuring that the radar beam is unobstructed and correctly aimed at the target measurement zone is essential. Avoiding installation locations with heavy spray, foam accumulation, or floating debris can further improve signal quality. In some cases, adjusting internal parameters such as filter length or direction filter may help optimize performance in challenging conditions. Monitoring the SNR indicator during commissioning provides valuable feedback about installation quality and overall measurement reliability.

4.5. Rain and Wind

Unlike conventional Doppler radars, whose accuracy can be significantly affected by rainfall, the VX60 uses advanced FMCW radar signal processing. This technology enables the instrument to distinguish between reflections from raindrops and reflections from the water surface. As a result, the VX60 can measure surface flow velocity reliably even during rainfall.

Wind generally has only a minor influence on measurement accuracy and can usually be neglected. The main exception is strong wind. Strong wind can generate surface waves that travel in a different direction than the main water flow. This may introduce deviations in the measured surface velocity.

In locations where strong wind is common, the following measures are recommended:

- Install the instrument at a sheltered location, if possible (for example, under a bridge structure or in a naturally protected river section).
- Avoid installation at wide, open sections where wind can generate significant cross-waves.
- Increase the filter duration (filter length) to improve measurement stability under fluctuating surface conditions. A longer filter duration reduces short-term fluctuations caused by wind-driven waves and improves overall measurement stability.

4.6. Interference and Multiple Radars

Due to the FMCW modulation technique and very short transmission bursts, multiple VX60 radars can operate in close proximity with very low risk of mutual interference. The radars are not time-synchronized, so overlap of their modulation patterns is typically brief and does not produce measurable degradation in normal installations. In addition, the radar antenna is highly focused and the transmitted power is low. This further reduces the possibility of interference between devices. In Geolux internal tests, 10 radars were operated within 2 meters of each other, and no interference was observed.

The Geolux VX60 can also operate reliably in the presence of other radar systems, including:

- FMCW radars operating at 60 GHz
- Radars operating at other frequencies (for example 24 GHz or 80 GHz)
- Radars using different modulation techniques

4.7. Fogging and Evaporation

Radar sensors are generally not affected by fog or regular water evaporation. Measurement performance remains stable under typical environmental conditions.

The exception is in the case of very heavy evaporation, where the concentration of water vapor directly above the surface is extremely high, such as wastewater channels or sewage pipes. In such conditions, the surface velocity measurement may be affected. If strong evaporation is present, the following configuration is recommended (this overrides general alignment guidance):

- Install the instrument so that it measures outgoing flow direction (water flowing away from the radar).
- Enable or configure the sensor to use outgoing only directional filtering.

Evaporation rises vertically upward from the water surface and moves toward the radar. By enabling downstream directional filtering, signals traveling toward the radar (inbound direction) are rejected. In most cases, this effectively eliminates the influence of evaporation on the measurement.

4.8. Reflections

Water is a highly reflective surface for radar waves. Most of the transmitted radar energy is reflected from the water surface. Radar reflections follow the same basic physical principles as light reflection. When the radar beam reaches the water surface, a part of the energy is reflected away from the radar, a part of the energy is reflected back toward the radar, and only a small portion of the energy is absorbed by the water.

The amount of energy reflected back toward the radar depends mainly on the surface roughness of the water and the incident angle of the radar beam. As a general rule, a rougher water surface produces stronger reflections back toward the radar. This increases the signal-to-noise ratio (SNR) and improves measurement accuracy. Even a small surface roughness of approximately 1 mm is usually sufficient for precise measurement.
The Geolux surface velocity radar is designed with advanced signal processing techniques that allow accurate operation even in low SNR conditions.

Indoor installation is generally not recommended. Radar signals may reflect from walls, ceilings, moving machinery, or rotating objects. These reflections can cause incorrect readings or false velocity measurements. For reliable operation, the instrument should be installed in an open outdoor environment with a clear and unobstructed measurement area.

5 Surface Velocity Radar Settings

Baud Rate

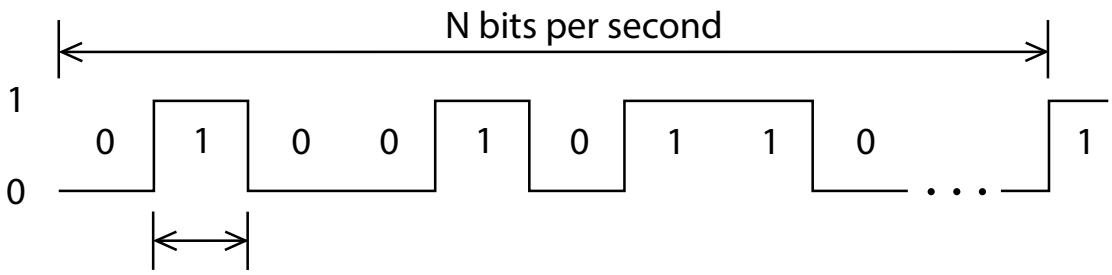

RS-232 Baud Rate

Configures the baud rate (bits per second) for serial communication on the RS-232 data line. This setting controls how many bits are sent on the communication line in one second. The available values are standardized. Using higher baud rate over longer lines may introduce errors in transferred data. The default instrument baud rate is 115200 bps.

RS-485 Baud Rate

Configures the baud rate (bits per second) for serial communication on the RS-485 data line. This setting controls how many bits are sent on the communication line in one second. The available values are standardized. Using higher baud rate over longer lines may introduce errors in transferred data. The default instrument baud rate is 9600 bps.

Device ID

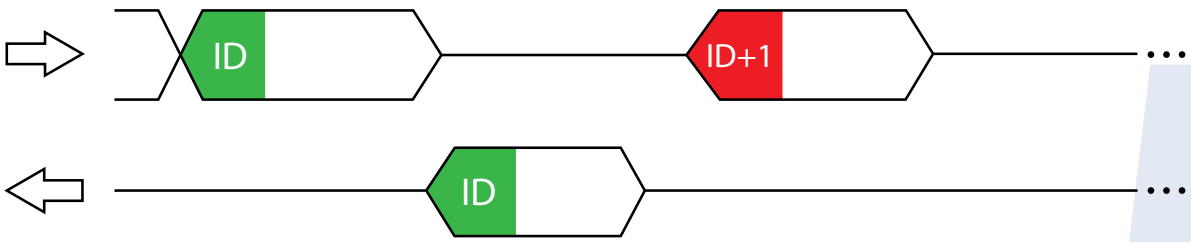

Modbus ID

Configures the device (slave) ID to be used on Modbus interface protocol. Modbus protocol uses request/response format and allow multiple instruments to be connected on the same bus. When a remote master transmits the request message, it will use the device ID as a device address. All instruments will receive the request, but only the instrument with matching device ID will answer to the received request.

SDI-12 ID

Configures the SDI-12 device ID to be used on SDI-12 interface. SDI-12 protocol uses request/response format and allows multiple instruments to be connected on the same bus. When a remote master transmits the request message, it will use the device ID as a device address. All instruments will receive the request, but only the instrument with matching device ID will answer to the received request.

Modbus Parity

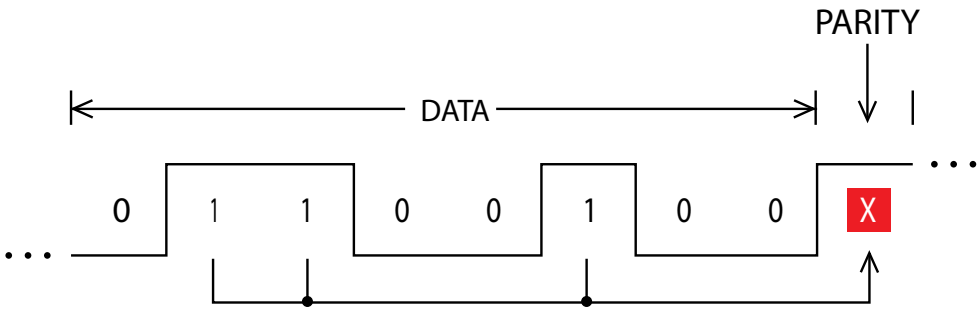

Parity is used in serial communication as a basic method of bit-level error detection. When parity is set to *None*, no parity bit is added to the transmitted data. In this case, no bit-level error checking is performed. When Even or Odd parity is selected, an additional parity bit is appended to each transmitted byte. This bit is set so that the total number of logical "1" bits in the byte (including the parity bit) is either even or odd, depending on the selected mode. If the receiving device detects that the calculated parity does not match the received parity bit, a communication error is identified.

For most Modbus devices, the default and commonly used setting is Even parity.

RS-485 Stop Bits

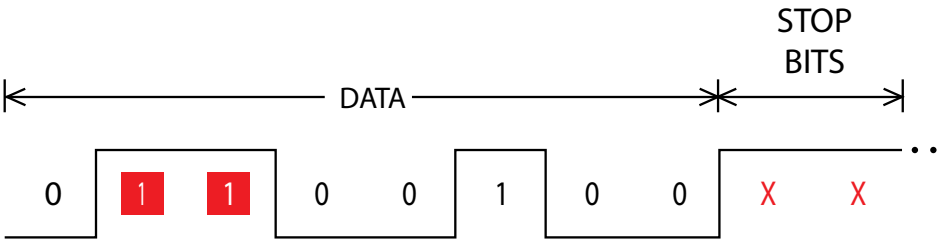

Stop bits are added to the end of each data byte transferred over serial line, to allow pause between the two bytes of data. One or two stop bits may be used. The default setting for most Modbus devices is one stop bit, but some dataloggers require that two stop bits be used.

4 – 20 mA Parameters

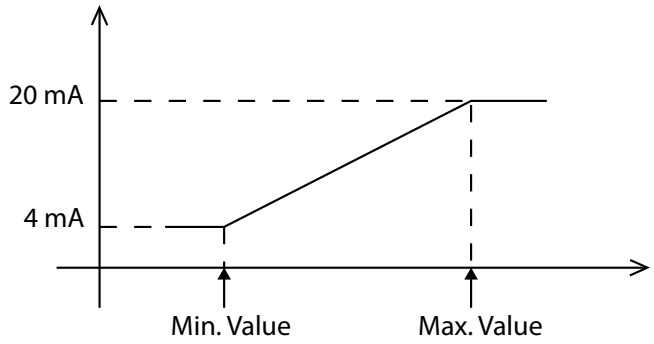

4 – 20 mA Minimum Value

To configure the 4–20 mA output range, the minimum measured value corresponding to 4 mA must be defined. The value is entered and the corresponding measurement unit (e.g., mm/s, m/s, ft/s) is selected. This setting determines the lower point of the linear scaling between the measured velocity and the analog output current.

Example:

If the expected measurement range is between 0.700 m/s and 1.500 m/s, it is recommended to set the 4 mA value slightly below the lowest expected measurement (e.g., 0.500 m/s). This ensures proper scaling and avoids signal saturation at the lower end of the operating range.

If measurement resolution is not critical, the minimum value for the 4–20 mA output may alternatively be left at the instrument minimum of 0 m/s.

4 – 20 mA Maximum Value

To configure the 4–20 mA output range, the maximum measured value corresponding to 20 mA must be defined. The value is entered and the corresponding measurement unit (e.g., mm/s, m/s, ft/s) is selected. This setting determines the higher point of the linear scaling between the measured velocity and the analog output current.

Example:

If the expected measurement range is between 0.700 m/s and 1.500 m/s, it is recommended to set the 20 mA value slightly above the highest expected measurement (e.g., 1.700 m/s). This ensures proper scaling and avoids signal saturation at the higher end of the operating range.

If measurement resolution is not critical, the maximum value for the 4–20 mA output may alternatively be left at the instrument maximum of 16.000 m/s.

Filter Length

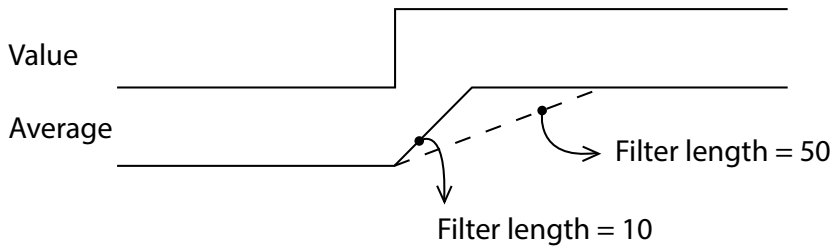

This parameter defines the length of the averaging filter, in seconds, used to smooth the measured velocity values.

A longer filter length means that a greater number of individual measurements are included in the averaging process, resulting in smoother and more stable output data. However, increasing the filter length also increases the response time of the instrument. When surface velocity changes, a longer filter will cause a slower transition to the new reported value.

In most applications, the recommended setting is between 10 and 30 seconds. For highly turbulent flow conditions, a longer filter length is recommended to achieve more stable measurement results.

Direction Filter

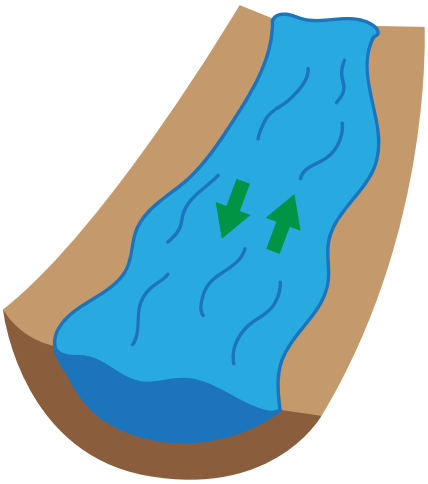

The Direction Filter parameter determines whether the instrument measures flow in both directions or restricts detection to a single flow direction (incoming or outgoing).

When set to *No Filter*, the radar measures velocity regardless of flow direction.

When set to *Incoming* or *Outgoing*, the instrument processes and reports only the selected flow direction. Radar returns corresponding to the opposite direction are ignored.

At monitoring sites where flow is expected to occur consistently in only one direction, it is strongly recommended to configure the Direction Filter accordingly. Restricting the measurement to the expected flow direction improves measurement stability and consistency by eliminating unwanted signal components.

SNR Treshold

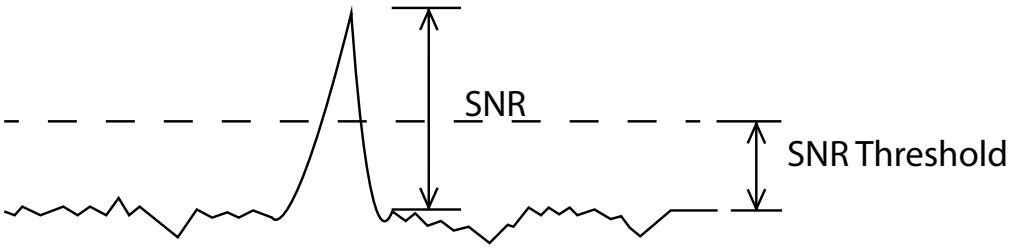

Defines the minimum signal-to-noise ratio (SNR), in dB, required for the radar to report a velocity measurement. Values below this threshold are ignored and zero velocity is reported.

A low SNR indicates that the radar signal is weak compared to the background noise , which can result in uncertain or incorrect velocity readings. Increasing this threshold helps filter out unreliable measurements. If you notice the radar reporting velocities when the water is not moving, check the SNR values during those periods. If they are consistently lower than during valid measurements, consider increasing the SNR threshold.

Beam Width

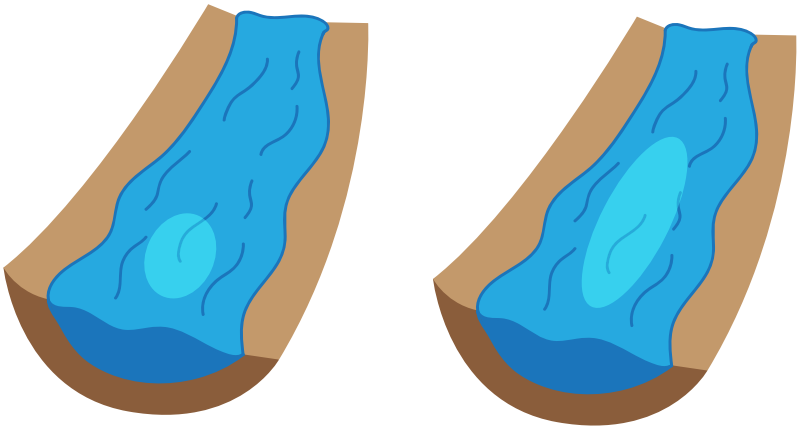

Beam Width defines the elevation spread of the radar beam and therefore how long a section of the water surface is analyzed. A narrower beam focuses on a shorter area close to the sensor, making it ideal when you want to exclude local disturbances such as waterfalls, cascades, or strong turbulence near the installation. A wider beam covers a longer surface area, allowing the radar to observe and average velocities over a broader section of the river or stream.

Because the radar reports an average velocity within the observed area, a wider beam is useful when surface velocities vary gradually, while a narrower beam provides more stable results in the presence of local disturbances.

Beam Position

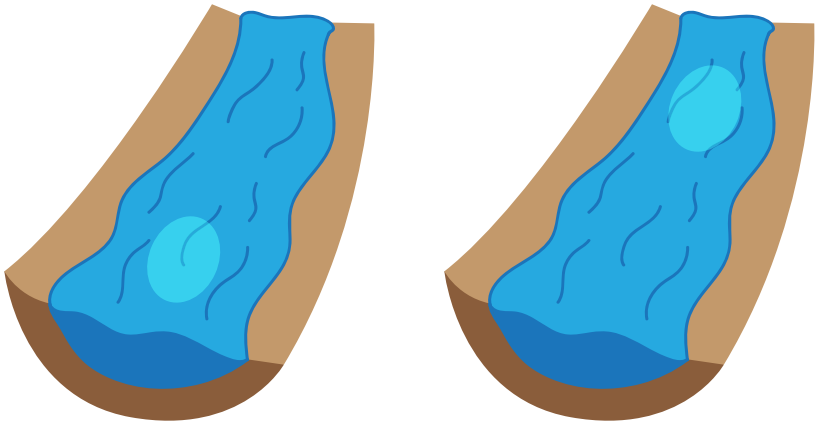

The Beam Position parameter defines the measurement zone on the water surface (either near or far), placed along the radar beam, where the surface velocity is analyzed.

The default setting is *Near*, which configures the radar to measure velocities closer to the instrument. This setting is suitable for most standard installations.

In certain situations, the water surface closer to the radar may be more turbulent or disturbed than areas farther away. In such cases, setting the Beam Position to *Far* shifts the measurement zone further from the instrument, which may result in more stable and representative velocity readings.

Output Unit

This parameter defines the measurement unit in which the radar's velocity readings are transmitted over all communication interfaces, including RS-232 (NMEA-like protocol), RS-485 (Modbus), and SDI-12.

Outputs with fixed units (for example, signed velocity in m/s) are not affected.

Select the unit that matches the requirements of your data logger, SCADA system, or telemetry platform to ensure proper scaling, interpretation, and integration of the measurement data.

Maximum Velocity

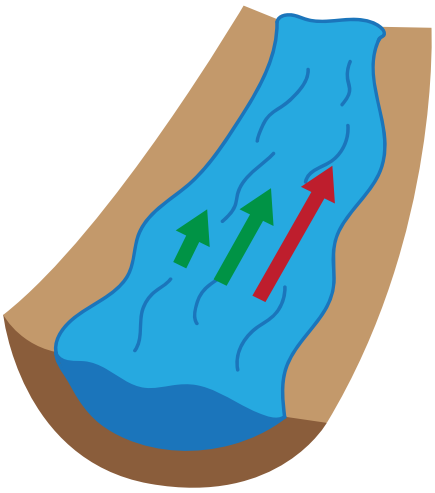

The Maximum Velocity setting defines the maximum expected surface flow velocity at the measurement site. The instrument will not report any velocity value higher than the configured maximum. Any detected value above this limit will be automatically rejected. This setting is useful for eliminating occasional spurious readings that may occur due to strong turbulence, debris passing through the radar beam, temporary signal disturbances, and environmental effects such as splashes or floating objects.

By setting a realistic maximum velocity based on site conditions, the reliability of the reported data can be improved.

> *Important:*
>
> The configured value should be slightly higher than the highest velocity expected at the site. If the value is set too low, valid high-flow measurements may be incorrectly discarded.

Minimum Distance

Defines the minimum valid distance between the radar and the water surface. Reflections detected closer than this value are ignored. This helps to eliminate unwanted signals from nearby objects such as bridge structures or mounting elements.

> *Important:*
>
> Set this value slightly below the shortest expected distance to the water surface.

Maximum Distance

Defines the maximum valid distance between the radar and the water surface. Reflections detected beyond this value are ignored. This prevents the instrument from processing signals outside the actual water surface area.

> *Important:*
>
> Set this value slightly above the longest expected distance to the water surface, considering water level variations.

Dynamic Flow Profiler

The Dynamic Flow Profiler (DFP) is an AI-based algorithm that improves measurement reliability under challenging conditions. When enabled, the instrument analyzes historical velocity data and learns the relationship between surface velocity and water level at the site. If the radar is temporarily unable to measure velocity due to low signal-to-noise ratio (SNR), smooth water surface, or other disturbances, DFP will estimate the velocity instead of reporting zero. The estimated value is calculated using previously recorded measurements and their correlation with the current water level. This function is especially useful at sites with very smooth water surfaces and weak radar reflections.

Important:

1. The instrument requires a training period to learn site-specific flow behavior. During this time, performance gradually improves.
2. If the radar is repositioned or installed at a new site, the DFP model must be reset. Click the Reset DFP button to clear previously learned data.

Power Management

Switching the device between continuous scanning mode and SDI-12 automatic sleep mode.
In continuous scanning mode, the device constantly performs measurements, which are transmitted over RS-232 interface and made available over Modbus, SDI-12, and analog interfaces. RS-232 measurement sentences are transmitted when NMEA output is enabled. When awake, the device is available over RS-232 and Modbus interfaces, and is responding to commands on these interfaces.

In SDI-12 automatic sleep mode, the device remains in low-power sleep mode until SDI-12 measure command is received (aM!). While in sleep mode, the device will not be able to connect to Modbus or RS-232 interface. For the reconfiguration of the device which is set to operate in SDI-12 automatic sleep mode, it is necessary to power-cycle the device then use the PC configurator application to connect to the device within 1 minute after power-up. If there is no attempt to connect to the device over RS-232 within one minute, the device will automatically go back to the sleep mode. Additionally, it is possible to send the custom SDI-12 command aXGLWU! That will also wake up the device from the sleep mode, and keep it running for 1 minute to allow the PC application enough time to establish the connection to the device.

Operation Mode

Allows switching the device from operating mode to standby mode and back. While the device is in standby mode, it will communicate through communication interfaces, but no measurements will be made. In operating mode, the device continuously performs measurements. In standby mode, the power consumption is reduced.

6 Data Protocols

The Geolux VX60 Surface Velocity Radar supports the following communication protocols:

- NMEA-like protocol (RS-232). Continuously outputs measured surface velocity, reflected signal strength, current tilt angle, and device temperature and relative humidity.
- Service protocol (RS-232). Used for instrument configuration and maintenance.
- Modbus RTU (RS-485). An industrial standard, supported by a wide range of third-party data loggers and control systems.
- SDI-12 protocol. Available for integration with SDI-12 compatible data loggers.

6.1. NMEA Protocol (RS-232)

NMEA protocol is based on the standard protocol family widely used by the navigation equipment. NMEA protocol is sentence oriented, and is capable of sending multiple sentences with different information. The sentence content is designated by the starting keyword which is different for each sentence type. NMEA sentences are terminated with the checksum which makes this protocol extremely reliable. NMEA protocol is single-direction protocol: data is only transmitted from the surface velocity radar. At RS-232 interface the device periodically outputs following data sentences:

Surface velocity measurement report

$VEL,<direction>,<velocity>,<snr>,<status><checksum><CR><LF>*

- **$VEL:** The keyword sent on the beginning of each report. This sentence contains information about the measured flow.
- **<direction>**: The direction of the flow, as detected by the instrument (1 incoming, -1 outgoing, 0 no flow).
- **<velocity>**: The absolute value of the surface flow velocity, in selected measurement units, as decimal number. If no flow is detected, the output will be zero.
- **<snr>**: The signal-to-noise ratio of the returned radar signal, in dB.
- **<status>**: The status indicator. If the device operates without any errors, the output will be zero. If non-zero, it is interpreted as error bitmask:

  Bit 0: forward tilt angle error (tilt angle outside of expected range),

  Bit 1: side tilt angle error (tilt is too big),

  Bit 2: radar co-processor update failed,

  Bit 3: radar co-processor not responding,

  Bit 4: radar co-processor needs to be updated,

  Bit 5: tilt sensor is not working,

Bit 6: radar self-calibration failed,

Bit 7: DFP data corrupt, needs reset,

Bit 8: power save mode is active,

Bit 9: radar is initializing.

- **<checksum>**: Two uppercase hexadecimal digits containing the checksum value of the NMEA sentence.

Device status report

$STAT,<angle_elevation>,<angle_sideways>,<temperature>,<humidity><checksum><CR><LF>*

- **$STAT:** The keyword sent to denote the device status report sentence.
- **<angle_elevation>**: The elevation angle, expressed in degrees, describes the tilt of the radar relative to the water surface. An elevation angle of 0° means the radar is oriented parallel to the water surface; an elevation angle of 90° means the radar is oriented perpendicular to the water surface.
- **<angle_sideways>**: The sideways tilt angle of the instrument. Negative values are tilted to the left, and positive to the right. The radar should be positioned so that this angle is close to zero.
- **<temperature>**: The temperature inside the instrument enclosure, in degrees Celsius.
- **<humidity>**: The relative humidity inside the instrument enclosure, in %.

NMEA Checksum Calculation

Each NMEA sentence ends with a checksum to ensure data integrity. The checksum (CSUM) is calculated as follows:

1. Start with a checksum value of 0.
2. Perform a bitwise XOR operation on all characters in the sentence between the $ and * symbols.
3. Do not include the $, *, the two checksum hex digits, or trailing CR/LF characters in the calculation.
4. If the input has no *, compute XOR over all characters after $.
5. The resulting checksum value is converted to two hexadecimal characters (0–9, A–F) and appended after the * symbol.

Python example

```
def nmea_checksum(nmea_sentence : str) -> str:
    s = nmea_sentence.rstrip("\\r\\n")
    # Remove leading '$' or '!' if present
    if s and s[0] in "$!":
        s = s[1:]
    # Keep only payload part before checksum delimiter
    s = s.split("*", 1)[0]
    checksum = 0
    for char in s.encode("ascii"):
        checksum ^= char
    return f"{checksum:02X}"
```

6.2. Servicing Protocol (RS-232)

The servicing protocol is used to read and modify the operating parameters of the surface velocity radar. Device settings such as filtering parameters, measurement units selection, interface configuration, and other internal parameters are adjusted using this protocol.

Since the NMEA-like measurement protocol is unidirectional (measurement data is transmitted only from the device to the host), the servicing protocol provides independent two-way configuration and maintenance access on the same RS-232 interface when the device is awake. To simplify device setup and parameter adjustment, Geolux provides the Geolux Instrument Configurator software tool. End users typically do not need to interact directly with the servicing protocol, as all configuration tasks are performed through the Configurator application. A detailed description of the software is provided in Chapter 7 of this manual.

Each command must begin with the '#' character and be terminated with a newline character. All standard combinations of carriage return (CR) and line feed (LF) characters (CR, LF, or CR+LF) are accepted as valid line termination.

Reading All Parameters at Once

To read all parameters at once, send the following command to the device:

```
#get_info
```

The device will respond with a structured list of all current parameters and system information in the following format:

```
#device_type: 10001
#firmware: 1.2.3
#serial_number: 12345
#<parameter_name_1>: <value1>
#<parameter_name_2>: <value2>
...
#update_status: 0
```

The response includes device identification information (such as device type, firmware version, and serial number), followed by all configurable and status parameters. A complete description of all available parameters is provided later in this chapter.

Reading Single Parameter

Any configuration parameter can be read individually:

```
#get_parameter_name
```

The device will respond:

```
#parameter_name: value
```

Writing Single Parameter

Any configuration parameter that is not read-only can be changed by the following command format:

#set_parameter_name=value

The device will respond, depending on success or failure:

#set_parameter_name:OK

#set_parameter_name:ERR

Enumerated parameters accept both the string name and the numeric index, for example:

#set_direction=incoming

#set_direction=1

List of Parameters

Parameter Name	Get Command	Set Command
Maximum Velocity Threshold	Defines the upper bound for valid surface velocity measurements. Velocity readings above this threshold are rejected. The numeric value parameter is interpreted in the unit defined by max_velocity_unit.	
`max_velocity`	`#get_max_velocity`	`#set_max_velocity=<value>`
Maximum Velocity Unit	Defines the physical unit used by max_velocity command. The accepted units are: mms = mm/s, ms = m/s, mph = mph, kmh = km/h, fps = ft/s, fpm = ft/min, cms = cm/s.	
`max_velocity_unit`	`#get_max_velocity_unit`	`#set_max_velocity_unit=<value>`
Direction Filter	Defines the direction filter configuration. The accepted values are: both = measure both directions, incoming = incoming flow only, outgoing = outgoing flow only.	
`direction`	`#get_direction`	`#set_direction=<value>`
SNR Threshold	Defines the SNR threshold limit value.	
`snr_threshold`	`#get_snr_threshold`	`#set_snr_threshold=<value>`

Filter Length	Defines the number of seconds used for internal smoothing. Higher values reduce noise but increase response lag. The valid range is between 1 and 120.	
`filter_len`	`#get_filter_len`	`#set_filter_len=<value>`

Velocity Output Unit	Defines the unit used for the velocity value in the SDI-12 measurement response, NMEA and on Modbus output. The accepted units are: mms = mm/s, ms = m/s, mph = mph, kmh = km/h, fps = ft/s, fpm = ft/min, cms = cm/s.	
`units`	`#get_units`	`#set_units=<value>`

Beam Width	Defines the radar beam width pattern. Wide beam covers a larger area; narrow beam is more focused and rejects off-axis targets. The accepted values are: wide, narrow.	
`beam_width`	`#get_beam_width`	`#set_beam_width=<value>`

Beam Offset	Defines the near or far measurement zone placed along the radar beam used for target detection. The accepted values are: near, far.	
`beam_offset`	`#get_beam_offset`	`#set_beam_offset=<value>`

Minimum Valid Distance	Defines the minimum valid distance to water surface. Reflections detected closer than this distance are ignored. Use this parameter to exclude near-field returns e.g., mounting hardware, bridge elements, or other objects close to the sensor. The corresponding measurement unit is defined by min_distance_unit parameter.	
`min_distance`	`#get_min_distance`	`#set_min_distance=<value>`

Minimum Valid Distance Unit	Defines the measurement unit used by min_distance parameter. The accepted units are: mm, cm, m, ft, in.	
`min_distance_unit`	`#get_min_distance_unit`	`#set_min_distance_unit=<value>`

Maximum Valid Distance	Gets / sets the maximum valid distance to water surface. Reflections detected beyond this distance are ignored. Use this parameter to exclude far-field returns outside the intended measurement zone e.g., opposite bank, structures, or background targets. The corresponding measurement unit is defined by max_distance_unit parameter.	
`max_distance`	`#get_max_distance`	`#set_max_distance=<value>`

Maximum Valid Distance Unit	Gets / sets the measurement unit used by max_distance parameter. The accepted units are: mm, cm, m, ft, in.	
`max_distance_unit`	`#get_max_distance_unit`	`#set_max_distance_unit=<value>`

RS-232 Baud Rate	Gets / sets the baud rate of the RS-232 serial interface. The change takes effect immediately. The accepted values for baud rates are: 4800, 9600, 14400, 19200, 38400, 57600, 115200.	
`baud_rate`	`#get_baud_rate`	`#set_baud_rate=<value>`

Modbus Baud Rate	Gets / sets the baud rate of the RS-485/Modbus serial interface. The change takes effect immediately. The accepted values for baud rates are: 4800, 9600, 14400, 19200, 38400, 57600, 115200.	
`modbus_baud_rate`	`#get_modbus_baud_rate`	`#set_modbus_baud_rate=<value>`

Modbus Device ID	Gets / sets the Modbus RTU slave address. Must be unique on the RS485 bus. The accepted value range for Modbus RTU slave address is 1 – 247	
`modbus_id`	`#get_modbus_id`	`#set_modbus_id=<value>`

Modbus Serial Line Parity	Gets / sets the serial line parity for RS-485 / Modbus connection. The change takes place immediately. The accepted values are: none, odd, even.	
modbus_parity	#get_modbus_parity	#set_modbus_parity=<value>
Modbus Serial Line Stop bits	Gets / sets the number of stop bits for the serial line of RS-485 / Modbus connection. The change takes place immediately. The accepted values are: one, two.	
modbus_stopbits	#get_modbus_stopbits	#set_modbus_stopbits=<value>

SDI-12 Address	Address of the device on the SDI-12 bus. Valid range is 0–61, which will be converted to characters 0-9, A-Z and a-z.	
sdi_id	#get_sdi_id	#set_sdi_id=<value>

Disable NMEA Output	Gets / sets the parameters that disables NMEA sentence output on RS-232. The accepted values are: off, on.	
disable_nmea	#get_disable_nmea	#set_disable_nmea=<value>

Analog Output Minimum Value	Gets / sets the surface velocity measurement value that corresponds to the minimum output on the analog current interface (4 mA). The corresponding measurement unit is defined by analog_min_unit parameter.	
analog_min	#get_analog_min	#set_analog_min=<value>

Analog Output Minimum Unit	Gets / sets the measurement unit for the value defined by analog_min parameter. The accepted units are: mms = mm/s, ms = m/s, mph = mph, kmh = km/h, fps = ft/s, fpm = ft/min, cms = cm/s.	
analog_min_unit	#get_analog_min_unit	#set_analog_min_unit=<value>

Analog Output Maximum Value	Gets / sets the surface velocity measurement value that corresponds to the maximum output on the analog current interface (20 mA). The corresponding measurement unit is defined by analog_max_unit parameter.	
analog_max	#get_analog_max	#set_analog_max=<value>

Analog Output Maximum Unit	Gets / sets the measurement unit for the value defined by analog_max parameter. The accepted units are: mms = mm/s, ms = m/s, mph = mph, kmh = km/h, fps = ft/s, fpm = ft/min, cms = cm/s.	
analog_max_unit	#get_analog_max_unit	#set_analog_max_unit=<value>

Configure Power Management Mode (SDI-12 Sleep Mode)	Gets / sets the automatic SDI-12 sleep mode parameter. When sleep is enabled, the device enters low-power sleep between SDI-12 transactions. When disabled, the sensor runs continuously and is ready at all times. The accepted values are: on = sleep enabled, off = sleep disabled (continuous scanning).	
sdi_sleep	#get_sdi_sleep	#set_sdi_sleep=<value>

Configure Operation Mode	Gets / sets the operation mode parameter. When the operation mode is set to standby, the device will go to standby mode. In standby mode, it will communicate on all communication interfaces, but the radar transmitters will be turned off to reduce the power, and the instrument will not be making any measurements. The accepted values are: off = normal operation, on = standby operation.	
power_save	#get_power_save	#set_power_save=<value>

Configure Fixed Mounting Angle	Override measured pitch angle with a fixed value (degrees). Changing this parameter will affect the reported velocity as cosine correction behaviour will be changed. Use this parameter only during tow-tank testing. Set 0 to use real measured angle. The accepted value range for fixed angle is: 0 – 89	
fixed_angle	#get_fixed_angle	#set_fixed_angle=<value>

Show Data on Error	Continue reporting velocity data even when angle errors are detected. off = clear velocity on error (send 0 as velocity instead of the measured value), on = keep velocity.	
show_data_on_error	#get_show_data_on_error	#set_show_data_on_error=<value>

List of Commands

Perform Soft Reset	Restarts the device firmware. All settings are retained (stored in non-volatile memory). The device will be unresponsive for a few seconds after issuing this command.
`#reset`	

Reset DFP	Clears all accumulated DFP history data. Use this after a significant change in site conditions or sensor placement.
`#reset_dfp`	

Factory Reset	Restores all settings to their factory defaults and restarts the device. This is irreversible.
`#factory_reset`	

6.3. Modbus Protocol (RS-485)

The VX60 instrument responds to Modbus RTU requests over the RS-485 data line. Communication parameters such as baud rate, parity, stop bits, and device ID are configured through the PC application or via Modbus itself. The default settings are:

- Baud rate: 9600
- Data bits: 8
- Parity: Even
- Stop bits: 1
- Slave ID: 1

Modbus is a request-response protocol. A master device (such as a data logger or PLC) sends requests, and the slave device (the VX60 instrument) responds. The master can either read the value of one or more holding registers (using Modbus function code 0x03), or write the value of a holding register (function code 0x06), or write more holding registers (function code 0x10). All registers in the VX60 are Holding Registers (40001-range in Modbus convention).

Important:
Register Address vs. Register Number

Modbus is a request-response protocol. A master device (such as a data logger or PLC) sends requests, and the slave device (the VX60 instrument) responds. The master can either read the value of one or more holding registers (using Modbus function code 0x03), or write the value of a holding register (function code 0x06), or write more holding registers (function code 0x10). All registers in the VX60 are Holding Registers (40001-range in Modbus convention).

```
register number = register address + 1
```

For example, the first register has address 0 and register number 1. The modpoll utility and most Modbus configuration tools use the 1-based register number.

To further complicate things, certain PLC software packages use 40001-based addressing. In this convention, holding registers are labeled starting from 40001, so that the register number 40001 corresponds to the first holding register at address 0. It is important to understand that the leading "4" in addresses such as 40001 does not form part of the address transmitted over Modbus. Instead, it indicates the register type (4 = Holding Register, not to be confused with function 3 for reading holding registers). The actual address sent in the Modbus frame is zero-based and does not include this prefix.

```
PLC register number = register address + 40001
```

Modbus is a very old protocol, so please do not judge its quirks too harshly.
Throughout this document, both the zero-based register address and the corresponding one-based register number are shown for clarity.

Each Modbus register holds a single 16-bit (2-byte) value. The VX60 uses the following data types:

- uint16 / int16 (1 register)
  A single 16-bit value occupying one register. Unsigned values (uint16) range from 0 to 65535. Signed values (int16) range from -32768 to 32767.
- uint32 (2 registers)
  A 32-bit unsigned integer spanning two consecutive registers. The low word is in the first (even-addressed) register, and the high word is in the second (odd-addressed) register.

  Example: Value 0x00000003 would be transmitted as pair of registers 0x0003 and 0x0000.
- float32 (2 registers)
  A 32-bit IEEE 754 floating-point value spanning two consecutive registers. The encoding uses little-endian word order (low word first, high word second), which is common in industrial Modbus devices.

  Example: The Value 1.5 is encoded per IEEE 754 as 0x3FC00000, and would be transmitted as pair of registers 0x0000 and 0x3FC0.

  A fixed endianness check register at address 62 (register 63) always returns the value **-123.265625.** Read this register to verify your decoder handles the byte/word order correctly. The expected raw register values are 0x8800, 0xC2F6.

Reading Registers with modpoll

modpoll is a command-line utility for reading and writing Modbus registers from a PC.
To read the first four float32 measurement values (velocity, direction, signed velocity, SNR) from the VX60, run modpoll with the following arguments:

```
modpoll -m rtu -a 1 -r 1 -c 8 -t 4:float -e -b 9600 -d 8 -p even -s 1 COM3
```

To read a single uint16 configuration register (e.g., measurement unit at register 130):

```
modpoll -m rtu -a 1 -r 130 -c 1 -t 4 -b 9600 -d 8 -p even -s 1 COM3
```

These examples were tested with modpoll version 3.10.

Flag	Meaning
-a 1	Slave address 1
-r 1	Start at register number 1 (address 0x00)
-c 8	Read 8 registers (= 4 float32 values)
-t 4:float	Interpret as 32-bit float
-e	Little-endian word order (low word first)
-b 9600	Baud rate 9600
-d 8	8 data bits
-p even	Even parity
-s 1	1 stop bit
COM3	Serial port (use /dev/ttyUSB0 on Linux)

Register Groups

The register address space is divided into three distinct blocks:

- **Block 1** provides high-resolution measurement data as 32-bit floats. This is the recommended block for modern data loggers and SCADA systems.
- **Block 2** provides the same measurement data encoded as 16-bit integers for compatibility with legacy data loggers that cannot decode float32 values. Values are scaled as documented in the register table.
- **Block 3** contains all user-configurable device parameters. Some addresses are reserved, and will read as zero and must not be written.

Block	Address Range	Register Range	Purpose
1	0 – 63 0x00 – 0x3F	1 – 64 0x01 – 0x40	Measurement data (float32, read-only)
2	64 – 127 0x40 – 0x7F	65 – 128 0x41 – 0x80	Measurement data (int16 compatibility, read-only)
3	128 – 175 0x80 – 0xAF	129 – 176 0x81 – 0xB0	Configuration parameters (read/write)

Block 1: Measurement Registers – Float32 Measurements (Read Only)

Address(es)	Reg #	Data Type	Description
0, 1 0x00, 0x01	1, 2 0x01, 0x02	float32	Absolute surface velocity in the selected measurement unit (always >= 0). The unit is set by configuration register 0x81.
2, 3 0x02, 0x03	3, 4 0x03, 0x04	float32	Flow direction: +1.0 = incoming (towards sensor), -1.0 = outgoing (away from sensor), 0.0 = no flow detected.
4, 5 0x04, 0x05	5, 6 0x05, 0x06	float32	Surface velocity in m/s. The value can be positive or negative. Positive values – incoming flow, negative values – outgoing flow. Not unit-converted, always in m/s.
6, 7 0x06, 0x07	7, 8 0x07, 0x08	float32	Signal-to-noise ratio (SNR), of the returned radar signal in dB. Higher values indicate stronger signal quality.
8, 9 0x08, 0x09	9, 10 0x09, 0x0A	float32	Forward tilt angle of the sensor in degrees. Ideally the sensor should be mounted at 60°.
10, 11 0x0A, 0x0B	11, 12 0x0B, 0x0C	float32	Side tilt angle of the sensor in degrees. This angle should be very close to 0°.
12, 13 0x0C, 0x0D	13, 14 0x0D, 0x0E	float32	Device temperature in units of degrees Celsius.
14, 15 0x0E, 0x0F	15, 16 0x0F, 0x10	float32	Relative humidity inside the device enclosure in percent (%).
16, 17 0x10, 0x11	17, 18 0x11, 0x12	uint32	Status flags (0 = all OK), as error bitmask: Bit 0: forward tilt angle error (tilt angle outside of expected range). Bit 1: side tilt angle error (tilt is too big), Bit 2: radar co-processor update failed, Bit 3: radar co-processor not responding, Bit 4: radar co-processor needs to be updated, Bit 5: tilt sensor is not working, Bit 6: radar self-calibration failed, Bit 7: DFP data corrupt, needs reset, Bit 8: standby mode is active, Bit 9: radar is initializing.
18 0x12	19 0x13	uint16	Firmware upgrade status: 0 = idle, 1 = pending, 2 = active, 3 = done, 4 = failed.
19 – 61 0x13 – 0x3D	20 – 62 0x14 – 0x3E	—	Reserved. Reads as 0.
62, 63 0x3E, 0x3F	63, 64 0x3F, 0x40	float32	Endianness check: This register will always return constant -123.265625, as a pair of values 0x8800, 0xC2F6. Use this to verify float32 decoding in your system.

Block 2: Measurement Registers – Int16 Compatibility Measurements (Read Only)

These registers provide the same measurement data as Block 1, but encoded as 16-bit integers for compatibility with data loggers that do not support float32 decoding. All values are read-only.

Address(es)	Reg #	Data Type	Description
64 0x40	65 0x41	uint16	Absolute surface velocity, integer part, in selected measurement unit. Example: if velocity is 12.3456, this register returns 12.
65 0x41	66 0x42	uint16	Absolute surface velocity, fractional part (4 decimal digits), in selected measurement units. Example: if velocity is 12.3456 this register returns 3456; if velocity is 12.34 then the register returns 3400.
66 0x42	67 0x43	int16	Flow direction: +1 = incoming, -1 = outgoing, 0 = no flow.
67 0x43	68 0x44	int16	Surface velocity in mm/s, integer part only. Positive values – incoming flow, negative values – outgoing flow. Clamped to range -16000 .. +16000 mm/s.
68 0x44	69 0x45	uint16	Signal-to-noise ratio (SNR), of the returned radar signal in dB integer part only. Higher values indicate stronger signal quality.
69 0x45	70 0x46	int16	Forward tilt angle of the sensor in degrees. Ideally the sensor should be mounted at 60°.
70 0x46	71 0x47	int16	Side tilt angle of the sensor in degrees. This angle should be very close to 0°.
71 0x47	72 0x48	int16	Device temperature in degrees Celsius × 100. Example: if temperature is 23.456 °C then this register holds 2345.
72 0x48	73 0x49	int16	Relative humidity inside the device enclosure in percent (%) × 100. Example: if relative humidity is 24.17 % then this register holds 2417.
73, 74 0x49, 0x4A	74, 75 0x4A, 0x4B	uint32	Status flags (same encoding as Block 1).
75 0x4B	76 0x4C	uint16	Firmware upgrade status (same as Block 1 register 0x12).

Block 3: Configuration Registers (Read / Write)

Addr	Reg #	Data Type	Description	Range	Default
128 0x80	129 0x81	uint16	Current firmware version number. Read-only. Example: if the firmware version is 1.2.3 this register holds 123.	–	–
129 0x81	130 0x82	uint16	Measurement unit for velocity output, affects values in registers 0x00, 0x01, 0x40, 0x41. 0 = mm/s, 1 = m/s, 2 = mph, 3 = km/h, 4 = ft/s, 5 = ft/min, 6 = cm/s.	0 – 6	1 (m/s)
130 – 131 0x82 – 0x83	131 – 132 0x83 – 0x84	–	Reserved.	–	–
132 0x84	133 0x85	uint16	Velocity filter length in seconds. Longer values produce smoother but slower-responding readings.	1 – 120	10
133 0x85	134 0x86	uint16	Direction filter. 0 = measure both directions, 1 = incoming flow only, 2 = outgoing flow only.	0 – 2	0 (both)
134 0x86	135 0x87	uint16	Radar beam width configuration. 0 = wide, 1 = narrow.	0 – 1	0 (off)
136, 137 0x88, 0x89	137, 138 0x89, 0x8A	float32	Maximum velocity threshold. Velocity readings above this threshold are rejected.	–	16.0
138 0x8A	139 0x8B	uint16	Unit for maximum velocity threshold. 0 = mm/s, 1 = m/s, 2 = mph, 3 = km/h, 4 = ft/s, 5 = ft/min, 6 = cm/s.	0 – 6	1 (m/s)
139 0x8B	140 0x8C	uint16	Radar beam offset configuration. 0 = near, 1 = far.	0 – 1	0 (near)
140, 141 0x8C, 0x8D	141, 142 0x8D, 0x8E	float32	Minimum valid distance to water surface. Reflections detected closer than this distance are ignored. Use this parameter to exclude near-field returns e.g., mounting hardware, bridge elements, or other objects close to the sensor..	–	0

Addr	Reg #	Data Type	Description	Range	Default
142 0x8E	143 0x8F	uint16	Unit for minimum valid distance to water surface. 0 = mm, 1 = cm, 2 = m, 3 = ft, 4 = in.	0 – 4	2 (m)
143 0x8F	144 0x90	—	Reserved.	—	—
144, 145 0x90, 0x91	145, 146 0x91, 0x92	float32	Maximum valid distance to water surface. Reflections detected beyond this distance are ignored. Use this parameter to exclude far-field returns outside the intended measurement zone e.g., opposite bank, structures, or background targets.	—	30.0
146 0x92	147 0x93	uint16	Unit for maximum valid distance to water surface. 0 = mm, 1 = cm, 2 = m, 3 = ft, 4 = in.	0 – 4	2 (m)
147 0x93	148 0x94	int16	SNR threshold, in dB.	0 – 255	0 (dB)
148 0x94	149 0x95	uint16	RS-232 serial port baud rate. 0 = 4800, 1 = 9600, 2 = 14400, 3 = 19200, 4 = 38400, 5 = 57600, 6 = 115200.	0 – 6	6 (115200)
149 0x95	150 0x96	uint16	Modbus RS-485 baud rate. Caution: changing this will require the master to reconnect at the new baud rate. 0 = 4800, 1 = 9600, 2 = 14400, 3 = 19200, 4 = 38400, 5 = 57600, 6 = 115200.	0 – 6	1 (9600)
150 0x96	151 0x97	uint16	Modbus parity setting. 0 = none, 1 = odd, 2 = even.	0 – 2	2 (even)

Addr	Reg #	Data Type	Description	Range	Default
151 0x97	152 0x98	uint16	Modbus stop bits. 0 = one stop bit, 1 = two stop bits.	0 – 1	0 (one)
152 0x98	153 0x99	uint16	Modbus slave address. Must be unique on the RS-485 bus.	1 – 247	1
153 0x99	154 0x9A	uint16	SDI-12 sensor address. The value is stored as a numeric integer (0 – 61) in the register. SDI-12 addressing is character-based, so the numeric value from the register is converted to the corresponding SDI-12 address character according to the following mapping: 0 – 9 → Characters '0'–'9' 10 – 35 → Characters 'A'–'Z' 36 – 61 → Characters 'a'–'z'	0 – 61	0
154 0x9A	155 0x9B	uint16	Power management mode. Gets / sets the automatic SDI-12 sleep mode parameter. When SDI-12 sleep is enabled, the device enters low-power sleep between SDI-12 transactions. When disabled, the sensor runs continuously and is ready at all times. 0 = sleep enabled (low power), 1 = sleep disabled (continuous scanning).	0 – 1	1 (off)
155 0x9B	156 0x9C	–	Reserved.	–	–
156, 157 0x9C, 0x9D	157, 158 0x9D, 0x9E	float32	Minimum value for analog output (4–20 mA) scaling. Measurements at or below this value produce minimum current.	–	0
158 0x9E	159 0x9F	uint16	Unit for minimum value for analog output. 0 = mm/s, 1 = m/s, 2 = mph, 3 = km/h, 4 = ft/s, 5 = ft/min, 6 = cm/s.	0 – 6	1 (m/s)
159 0x9F	160 0xA0	–	Reserved.	–	–
160, 161 0xA0, 0xA1	161, 162 0xA1, 0xA2	float32	Maximum value for analog output (4–20 mA) scaling. Measurements at or above this value produce maximum current.	–	16.0

Addr	Reg #	Data Type	Description	Range	Default
162 0xA2	163 0xA3	uint16	Unit for maximum value for analog output 0 = mm/s, 1 = m/s, 2 = mph, 3 = km/h, 4 = ft/s, 5 = ft/min, 6 = cm/s.	0 – 6	1 (m/s)
163 0xA3	164 0xA4	–	Reserved.	–	–
164 0xA4	165 0xA5	uint16	Operation mode. When the operation mode is set to standby, the device will communicate on all communication interfaces, but the radar transmitters will be turned off to reduce the power, and the instrument will not be making any measurements. 0 = off (normal operation), 1 = on (standby operation).	0 – 1	0 (off)
165 0xA5	166 0xA6	uint16	Disable NMEA sentence output on RS-232. 0 = NMEA enabled, 1 = NMEA disabled.	0 – 1	0 (off)
166 0xA6	167 0xA7	uint16	Continue reporting velocity data even when angle errors are detected. 0 = clear velocity on error (send 0 as velocity instead of measured value) 1 = keep velocity.	0 – 1	0 (off)
167 0xA7	168 0xA8	uint16	Override measured pitch angle with a fixed value (degrees). Changing this parameter will affect the reported velocity as cosine correction behaviour will be changed. Use this parameter only during tow-tank testing. 0 = use measured angle.	0 – 89	0 (off)
168 – 171 0xA8 – 0xAB	169 – 172 0xA9 – 0xAC	–	Reserved.	–	–
172 0xAC	173 0xAD	uint16	**Command:** Write value 0xAD10 to this register, to perform a software reset. The device will restart immediately. The magic value prevents accidental resets.	0xAD10 44304	–
173 0xAD	174 0xAE	uint16	**Command:** Write value 0xBAC1 to this register, to restore all parameters to factory defaults and restart. The magic value prevents accidental resets.	0xBAC1 47809	–

Addr	Reg #	Data Type	Description	Range	Default
174 0xAE	175 0xAF	uint16	**Command:** Write value 0xCDF0 to this register, to clear the DFP (Dynamic Flow Pofiler) learned data. The magic value prevents accidental resets.	0xCDF0 52720	–

6.4. SDI-12 Protocol

The VX60 surface velocity radar supports communication via the SDI-12 (Serial Data Interface at 1200 baud) protocol. The instrument responds to standard SDI-12 measurement commands by returning measured surface velocity and related data, and, in addition to standard measurement commands, the device implements a set of custom SDI-12 commands that allow users to read and modify internal configuration parameters, retrieve diagnostic information, and execute specific service operations such as restoring factory default settings.

In the command tables below, bold letter a represents the device address. *Italic* letters represent parameters. Underlined letters are sent verbatim. CR and LF denote carriage return / line feed pair which is sent at the end of each response. The response contains no space character – in the table below the spaces are inserted between response elements to improve readability only.

Standard SDI-12 Commands

Request	Response	Example
Device Address Query	Device will identify by returning its SDI-12 address. The factory default address is 0.	
?!	**a** CR LF	→ ?! ← 0
Ping Sensor	The device will return its address if the address in the request matches the device address. This command is used to verify that the device is active, at a given address, and responding to requests.	
a!	**a** CR LF	→ 0! ← 0
Change Address	The device will reconfigure to change its SDI-12 device address, and will respond with the new address. All subsequent requests to the device should be addressed to the new address. Take care when changing address, if improperly set on multi-sensor bus this can cause address collision.	
aA*b*!	*b* CR LF	→ 0A5! ← 5

Get Device Identification	The device will respond with its identification information: 14 - SDI protocol version 1.4 GEOLUX VX60 – device name *fff* – current firmware version	
aI!	a14GEOLUX VX60*fff*CR LF	→ 0I! ← 014GEOLUX VX6 100

Verify Device	This command is executed in two steps. First, the master sends the command **a**V! to initiate the verification procedure. The device responds with a standard SDI-12 service request indicating that after 000 seconds one value will be available for retrieval. The master must then issue the aD0! command to read the available value. The device responds with a single measurement representing the instrument's operational status: 0 – not ready 1 – ready	
aV! aD0!	a 0000 1 CR LF a *s* CR LF	→ 0V! ← 000001 → 0D0! ← 01

Perform Measurement	This command instructs the instrument to start a measurement cycle. Upon receiving **a**M!, the device immediately responds with the required warm-up time (in seconds) and the total number of measurement values that will be available once the measurement is completed. After the specified warm-up time has elapsed, the master should retrieve the measurement results using the **a**D0!, **a**D1!, etc., commands as needed, until all reported values have been read. If a CRC checksum is required to ensure data integrity, the **a**MC! command shall be used instead of **a**M!. This command functions identically to **a**M!, but the instrument appends a CRC checksum to each data response. The checksum in the response allows the master to verify the consistency and correctness of the transmitted values. The Geolux VX60 returns 8 values, in the following order: - Absolute surface velocity, in selected measurement unit - Direction flag (1 incoming, -1 outgoing, 0 no flow) - SNR, in dB - Forward tilt angle, in degrees - Side tilt angle, in degrees - Device temperature, in °C - Device relative humidity, in % - Device error status bitmask: Bit 0: forward tilt angle error (tilt angle outside of expected range), Bit 1: side tilt angle error (tilt is too big), Bit 2: radar co-processor update failed, Bit 3: radar co-processor not responding, Bit 4: radar co-processor needs to be updated, Bit 5: tilt sensor is not working, Bit 6: radar self-calibration failed,

	Bit 4: radar co-processor needs to be updated, Bit 5: tilt sensor is not working, Bit 6: radar self-calibration failed, Bit 7: DFP data corrupt, needs reset, Bit 8: standby mode is active, Bit 9: radar is initializing. The grouping of measurement values in responses to the aD0!, aD1!, aD2!, etc., commands does not necessarily follow the structure shown in the example above. The example is provided for illustration purposes only. In accordance with the SDI-12 protocol, the instrument may distribute the returned values across one or more data responses depending on the total length of the response string. Each SDI-12 response is limited in length, so the device dynamically groups values to fit within this constraint.	
aM! or aMC! aD0! aD1!	a *sss* 8 CR LF a *velocity dir snr fwdtilt* CR LF a *sidetilt temp rhum status* CR LF	→ 0M! ← 00158 … *after 15 seconds* … → 0D0! ← 0+1.023+1+47+61.23 → 0D1! ← 0-0.12+22.35+38.1+0

Perform Concurrent Measurement	The **a**C! command operates similarly to the previously described **a**M! command, with the key difference being that it enables concurrent measurements. After receiving **a**C!, the instrument responds with the required processing time and the number of values that will be available. Unlike **a**M!, the instrument does not hold the SDI-12 bus during the measurement process. This allows other SDI-12 devices on the same bus to perform measurements simultaneously. Once the indicated processing time has elapsed, the master can retrieve the results using the aD0!, aD1!, etc., commands, in the same manner as for **a**M!. In accordance with the SDI-12 specification for concurrent commands, the response to **a**C! uses two digits to indicate the number of measurement values that will be returned. If a CRC checksum is required to ensure data integrity, the **a**CC! command shall be used instead of **a**C!. This command functions identically to **a**C!, but the instrument appends a CRC checksum to each data response. The checksum in the response allows the master to verify the consistency and correctness of the transmitted values. The grouping of measurement values in responses to the aD0!, aD1!, aD2!, etc., commands does not necessarily follow the structure shown in the example above. The example is provided for illustration purposes only. In accordance with the SDI-12 protocol, the instrument may distribute the returned values across one or more data responses depending on the total length of the response string. Each SDI-12 response is limited in length, so the device dynamically groups values to fit within this constraint.

aC! or aCC! aD0! aD1!	a *sss* 08 CR LF a *velocity dir snr fwdtilt* CR LF a *sidetilt temp rhum status* CR LF	→ 0C! ← 001508 … *after 15 seconds* … → 0D0! ← 0+1.023+1+47+61.23 → 0D1! ← 0-0.12+22.35+38.1+0

Custom (extended) SDI-12 Commands Specific for VX60

Request	Response	Example
Maximum Velocity Threshold	Sets/gets the upper bound for valid surface velocity measurements. Velocity readings above this threshold are rejected. The numeric value parameter is interpreted in the unit set by **a**XGMVU!.	
Setting parameter: aXGMVL*value*! Reading parameter: aXGMVL!	For both set and read commands, the device will return the active value: a *value* CR LF	→ 0XGMVL! ← 016 → 0XGMVL+15 ← 015
Maximum Velocity Unit	Gets/sets the physical unit used by aXGMVL! command. The units are represented by the numerical value as follows: 0 = mm/s, 1 = m/s, 2 = mph, 3 = km/h, 4 = ft/s, 5 = ft/min, 6 = cm/s.	
Setting parameter: aXGMVU*value*! Reading parameter: aXGMVU!	For both set and read commands, the device will return the active value: a *value* **CR LF**	→ 0XGMVU! ← **01** → 0XGMVU+6 ← **06**
Direction Filter	Gets/sets the direction filter configuration. 0 = measure both directions, 1 = incoming flow only, 2 = outgoing flow only.	
Setting parameter: aXGDFT*value*! Reading parameter: aXGDFT!	For both set and read commands, the device will return the active value: a *value* **CR LF**	→ 0XGDFT! ← **00** → 0XGDFT+2 ← **02**

SNR Threshold	Gets/sets the SNR threshold value, in dB.	
Setting parameter: a<u>XGSTH</u>*value*<u>!</u> Reading parameter: a<u>XGSTH!</u>	For both set and read commands, the device will return the active value: **a** *value* **CR LF**	→ 0XGSTH! ← 00 → 0XGSTH+12 ← 012

Filter Length	Gets / sets the number of seconds used for internal smoothing. Higher values reduce noise but increase response lag. The valid range is between 1 and 120.	
Setting parameter: a<u>XGFLN</u>*value*<u>!</u> Reading parameter: a<u>XGFLN!</u>	For both set and read commands, the device will return the active value: **a** *value* **CR LF**	→ 0XGFLN! ← 01 → 0XGFLN+20 ← 020

Velocity Output Unit	Gets / sets the unit used for the velocity value in the SDI-12 measurement response, NMEA and on Modbus output. The units are represented by the numerical value as follows: 0 = mm/s, 1 = m/s, 2 = mph, 3 = km/h, 4 = ft/s, 5 = ft/min, 6 = cm/s.	
Setting parameter: a<u>XGUNT</u>*value*<u>!</u> Reading parameter: a<u>XGUNT!</u>	For both set and read commands, the device will return the active value: **a** *value* **CR LF**	→ 0XGUNT! ← 01 → 0XGUNT+0 ← 00

Beam Width	Gets / sets the radar beam width pattern. Wide beam covers a larger area; narrow beam is more focused and rejects off-axis targets. 0 = wide, 1 = narrow.	
Setting parameter: a<u>XGRBW</u>*value*<u>!</u> Reading parameter: a<u>XGRBW!</u>	For both set and read commands, the device will return the active value: **a** *value* **CR LF**	→ 0XGRBW! ← 00 → 0XGRBW+1 ← 01

Beam Position	Gets / sets the near or far measurement zone placed along the radar beam used for target detection. 0 = near, 1 = far.	
Setting parameter: aXGBOF*value*! Reading parameter: aXGBOF!	For both set and read commands, the device will return the active value: **a** *value* **CR LF**	→ 0XGBOF! ← 00 → 0XGBOF+1 ← 01

DFP Enable	Gets / sets the enable status of Dynamic Flow Profiler algorithm, which tracks and accumulates flow history for improved accuracy in low-flow conditions. 0 = disabled, 1 = enabled.	
Setting parameter: aXGDFP*value*! Reading parameter: aXGDFP!	For both set and read commands, the device will return the active value: **a** *value* **CR LF**	→ 0XGDFP! ← 00 → 0XGDFP+1 ← 01

Minimum Valid Distance	Gets / sets the minimum valid distance to water surface. Reflections detected closer than this distance are ignored. Use this parameter to exclude near-field returns e.g., mounting hardware, bridge elements, or other objects close to the sensor. The corresponding measurement unit is set by aXGDU0!	
Setting parameter: aXGDZ0*value*! Reading parameter: aXGDZ0!	For both set and read commands, the device will return the active value: **a** *value* **CR LF**	→ 0XGDZ0! ← 00 → 0XGDZ0+1 ← 01

Minimum Valid Distance Unit	Gets / sets the measurement unit used by minimum valid distance parameter (aXGDZ0!). The valid units are: 0 = mm, 1 = cm, 2 = m, 3 = ft, 4 = in.	
Setting parameter: aXGDU0*value*! Reading parameter: aXGDU0!	For both set and read commands, the device will return the active value: **a** *value* **CR LF**	→ 0XGDU0! ← 02 → 0XGDU0+1 ← 01

Maximum Valid Distance	Gets / sets the maximum valid distance to water surface. Reflections detected beyond this distance are ignored. Use this parameter to exclude far-field returns outside the intended measurement zone e.g., opposite bank, structures, or background targets. The corresponding measurement unit is set by aXGDU1!	
Setting parameter: aXGDZ1*value*! Reading parameter: aXGDZ1!	For both set and read commands, the device will return the active value: **a** *value* **CR LF**	→ 0XGDZ1! ← 030 → 0XGDZ1+5 ← 05

Maximum Valid Distance Unit	Gets / sets the measurement unit used by maximum valid distance parameter (aXGDZ1!). The valid units are: 0 = mm, 1 = cm, 2 = m, 3 = ft, 4 = in.	
Setting parameter: aXGDU1*value*! Reading parameter: aXGDU1!	For both set and read commands, the device will return the active value: **a** *value* **CR LF**	→ 0XGDU1! ← 02 → 0XGDU1+3 ← 03

RS-232 Baud Rate	Gets / sets the baud rate of the RS-232 serial interface. The change takes effect immediately. The valid values for baud rates are: 0 = 4800, 1 = 9600, 2 = 14400, 3 = 19200, 4 = 38400, 5 = 57600, 6 = 115200.	
Setting parameter: aXGSBD*value*! Reading parameter: aXGSBD!	For both set and read commands, the device will return the active value: **a** *value* **CR LF**	→ 0XGSBD! ← 06 → 0XGSBD+1 ← 01

Modbus Baud Rate	Gets / sets the baud rate of the RS-485/Modbus serial interface. The change takes effect immediately. The valid values for baud rates are: 0 = 4800, 1 = 9600, 2 = 14400, 3 = 19200, 4 = 38400, 5 = 57600, 6 = 115200.	
Setting parameter: a<u>XGMBD</u>*value*<u>!</u> Reading parameter: a<u>XGMBD!</u>	For both set and read commands, the device will return the active value: **a** *value* **CR LF**	→ 0XGMBD! ← 01 → 0XGMBD+6 ← 06

Modbus Device ID	Gets / sets the Modbus RTU slave address. Must be unique on the RS485 bus. The accepted value range for Modbus RTU slave address is: 1 – 247	
Setting parameter: a<u>XGMID</u>*value*<u>!</u> Reading parameter: a<u>XGMID!</u>	For both set and read commands, the device will return the active value: **a** *value* **CR LF**	→ 0XGMID! ← 01 → 0XGMID+10 ← 010

Modbus Serial Line Parity	Gets / sets the serial line parity for RS-485 / Modbus connection. The change takes place immediately. The valid values are: 0 = none, 1 = odd, 2 = even.	
Setting parameter: a<u>XGMPA</u>*value*<u>!</u> Reading parameter: a<u>XGMPA!</u>	For both set and read commands, the device will return the active value: **a** *value* **CR LF**	→ 0XGMPA! ← 02 → 0XGMPA+0 ← 00

Modbus Serial Line Stop bits	Gets / sets the number of stop bits for the serial line of RS-485 / Modbus connection. The change takes place immediately. The valid values are: 0 = one, 1 = two.	
Setting parameter: a<u>XGMSB</u>*value*<u>!</u> Reading parameter: a<u>XGMSB!</u>	For both set and read commands, the device will return the active value: **a** *value* **CR LF**	→ 0XGMSB! ← 00 → 0XGMSB+1 ← 01

Disable NMEA Output	Gets / sets the parameter that disables NMEA sentence output on RS-232. The valid values are: 0 = NMEA enabled, 1 = NMEA disabled.	
Setting parameter: a<u>XGNMA</u>*value*<u>!</u> Reading parameter: a<u>XGNMA!</u>	For both set and read commands, the device will return the active value: **a** *value* **CR LF**	→ 0XGNMA! ← 00 → 0XGNMA+1 ← 01

Analog Output Minimum Value	Gets / sets the surface velocity measurement value that corresponds to the minimum output on the analog current interface (4 mA). The measurement unit is set by aXGAU0!	
Setting parameter: a<u>XGAV0</u>*value*<u>!</u> Reading parameter: a<u>XGAV0!</u>	For both set and read commands, the device will return the active value: **a** *value* **CR LF**	→ 0XGAV0! ← 00 → 0XGAV0+0.1 ← 00.1

Analog Output Minimum Unit	Gets / sets the measurement unit for the value set by aXGAV0! command. The valid units are: 0 = mm/s, 1 = m/s, 2 = mph, 3 = km/h, 4 = ft/s, 5 = ft/min, 6 = cm/s.	
Setting parameter: a<u>XGAU0</u>*value*<u>!</u> **Reading parameter:** a<u>XGAU0!</u>	For both set and read commands, the device will return the active value: **a** *value* **CR LF**	→ 0XGAU0! ← 01 → 0XGAU0+4 ← 04

Analog Output Maximum Value	Gets / sets the surface velocity measurement value that corresponds to the maximum output on the analog current interface (20 mA). The measurement unit is set by aXGAU1!	
Setting parameter: a<u>XGAV1</u>*value*<u>!</u> Reading parameter: a<u>XGAV1!</u>	For both set and read commands, the device will return the active value: **a** *value* **CR LF**	→ 0XGAV1! ← 016 → 0XGAV1+10 ← 010

Analog Output Maximum Unit	Gets / sets the measurement unit for the value set by aXGAV1! command. The valid units are: 0 = mm/s, 1 = m/s, 2 = mph, 3 = km/h, 4 = ft/s, 5 = ft/min, 6 = cm/s.	
Setting parameter: aXGAU1*value*! Reading parameter: aXGAU1!	For both set and read commands, the device will return the active value: a *value* CR LF	→ 0XGAU1! ← 01 → 0XGAU1+3 ← 03

Configure Power Management Mode (Automatic SDI-12 Sleep)	Gets / sets the automatic SDI-12 sleep mode parameter. When sleep is enabled, the device enters low-power standby between SDI-12 transactions. When disabled, the sensor runs continuously and is ready at all times. The valid parameters are: 0 = sleep enabled, 1 = sleep disabled (continuous scanning).	
Setting parameter: aXGCON*value*! Reading parameter: aXGCON!	For both set and read commands, the device will return the active value: a *value* CR LF	→ 0XGCON! ← 01 → 0XGCON+0 ← 00

Configure Operation Mode	Gets / sets the operation mode parameter. When the operation mode is set to standby, the device will go to standby mode. In standby mode, it will communicate on all communication interfaces, but the radar transmitters will be turned off to reduce the power, and the instrument will not be making any measurements. The accepted values are: 0 = off (normal operation), 1 = on (standby operation).	
Setting parameter: aXGMUT*value*! Reading parameter: aXGMUT!	For both set and read commands, the device will return the active value: a *value* CR LF	→ 0XGMUT! ← 00 → 0XGMUT+1 ← 01

Configure Fixed Mounting Angle	Override measured pitch angle with a fixed value (degrees). Changing this parameter will affect the reported velocity as cosine correction behaviour will be changed. Use this parameter only during tow-tank testing. Set 0 to use real measured angle. The accepted value range for fixed angle is: 0 – 89	
Setting parameter: aXGFIX*value*! Reading parameter: aXGFIX!	For both set and read commands, the device will return the active value: a *value* CR LF	→ 0XGFIX! ← 00 → 0XGFIX+1 ← 01

Show Data on Error	Continue reporting velocity data even when angle errors are detected. 0 = clear velocity on error (send 0 as velocity instead of the measured value), 1 = keep velocity.	
Setting parameter: aXGSDE*value*! Reading parameter: aXGSDE!	For both set and read commands, the device will return the active value: a *value* CR LF	→ 0XGSDE! ← 00 → 0XGSDE+1 ← 01

Perform Soft Reset	Restarts the device firmware. All settings are retained (stored in non-volatile memory). The device will be unresponsive for a few seconds after issuing this command.	
aXGRST!	a CR LF	→ 0XGRST! ← 0

Reset DFP	Clears all accumulated DFP history data. Use this after a significant change in site conditions or sensor placement.	
aXGRDP!	a CR LF	→ 0XGRDP! ← 0

Factory Reset	Restores all settings to their factory defaults and restarts the device. This is irreversible.	
aXGFAC!	a CR LF	→ 0XGFAC! ← 0

Wake Up	This command wakes the device from SDI-12 sleep mode and keeps it awake for approximately 1 minute. Use this command when the automatic SDI-12 sleep mode is enabled (set with aXGCON+0!) and temporary access to the device is required. While awake, RS-232 and RS-485/Modbus interfaces remain active, allowing a connection to be established with the PC configuration application. After the timeout period expires, the device automatically returns to sleep mode if no further activity is detected.	
aXGLWU!	a CR LF	→ 0XGLWU! ← 0

7 Geolux Instrument Configurator

Geolux provides a user-friendly PC application, Geolux Instrument Configurator, for configuring the operating parameters of the surface velocity radar and monitoring live measurement data.
When the application is launched, the main window is displayed. Initially, no data is shown because the connection to the radar has not yet been established.

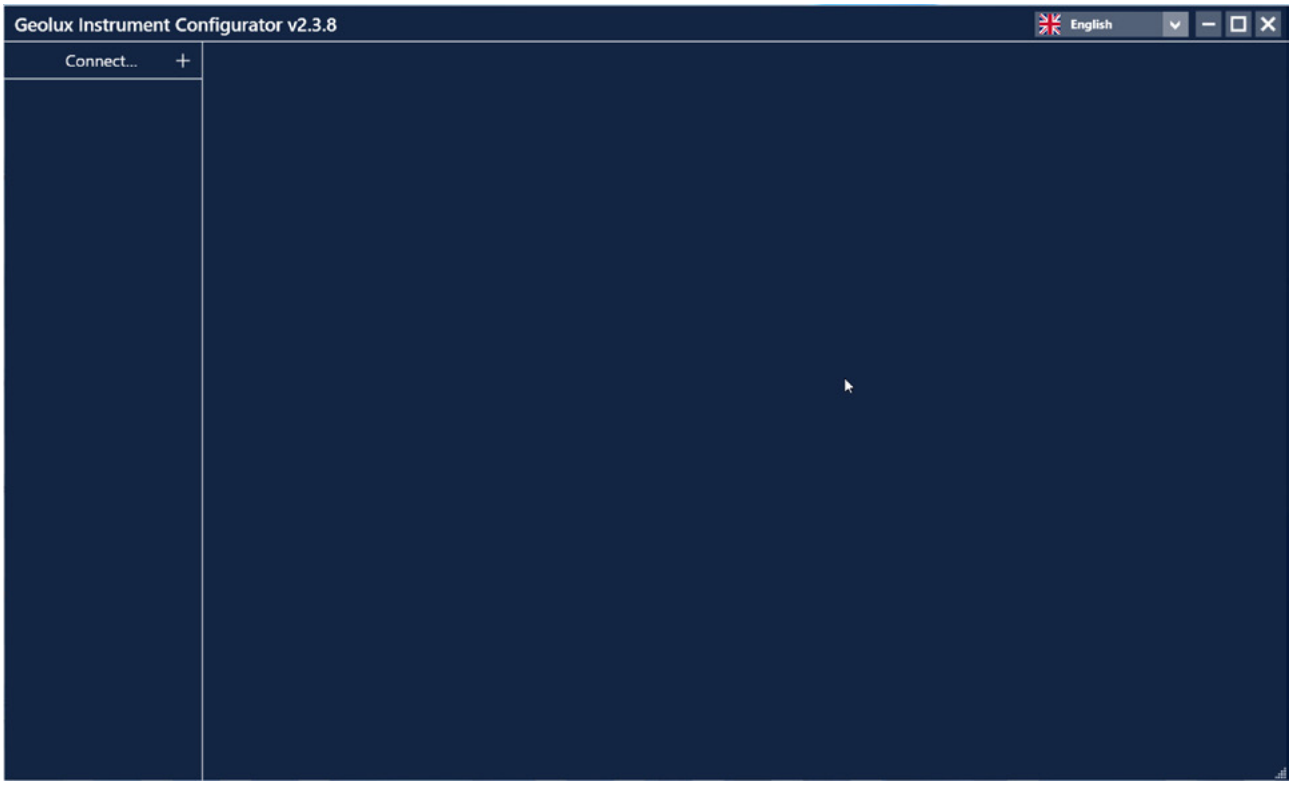

Picture 17. Geolux Instrument Configurator

Establishing Connection

To connect the PC to the surface velocity radar, first connect the radar to the PC using a serial communication cable. You can use either RS-232 port or RS-485 port to connect the device to the PC.

Click the Connect button in the upper-left corner of the application window, and select VX60 from the device selection window.

Picture 18. Device selection window

Then, select the appropriate COM port and communication interface. If RS-485 is selected, you must also configure the baud rate, and the Modbus device ID. If multiple devices are connected to the same RS-485 bus, ensure that each device has a unique Modbus ID.

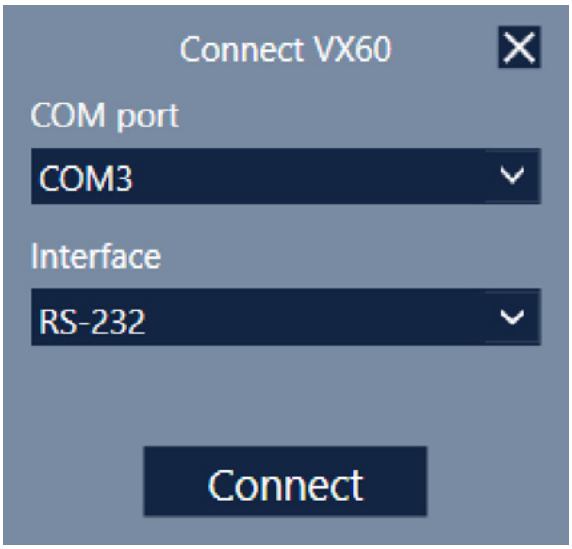

Picture 19. RS-232 connection parameters

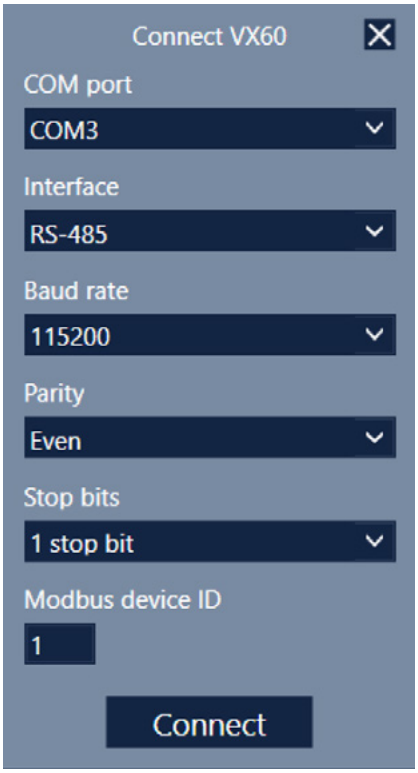

Picture 20. RS-485 connection parameters

After clicking Connect, the application attempts to establish communication with the device. If the connection is successful, the device appears under Connected devices on the left. Live flow velocity measurements are displayed in the Data tab, as numerical values and time-series graphs.

Hovering the mouse pointer over a parameter icon displays a detailed description of that parameter. By default, only the most important parameters are shown. Clicking the arrow button next to the displayed parameters expands the view to show all available data.

Clicking Start recording data begins recording the primary displayed measurements and saves them to a .csv file.

If the RS-232 interface is used and excessive checksum errors are detected, the interface, COM port, and baud rate text under Connected devices will turn red, indicating a communication error.

Picture 21. Data view page

Device Configuration

Clicking the Settings button opens the configuration interface, where the user can adjust operating parameters or upgrade the device firmware.

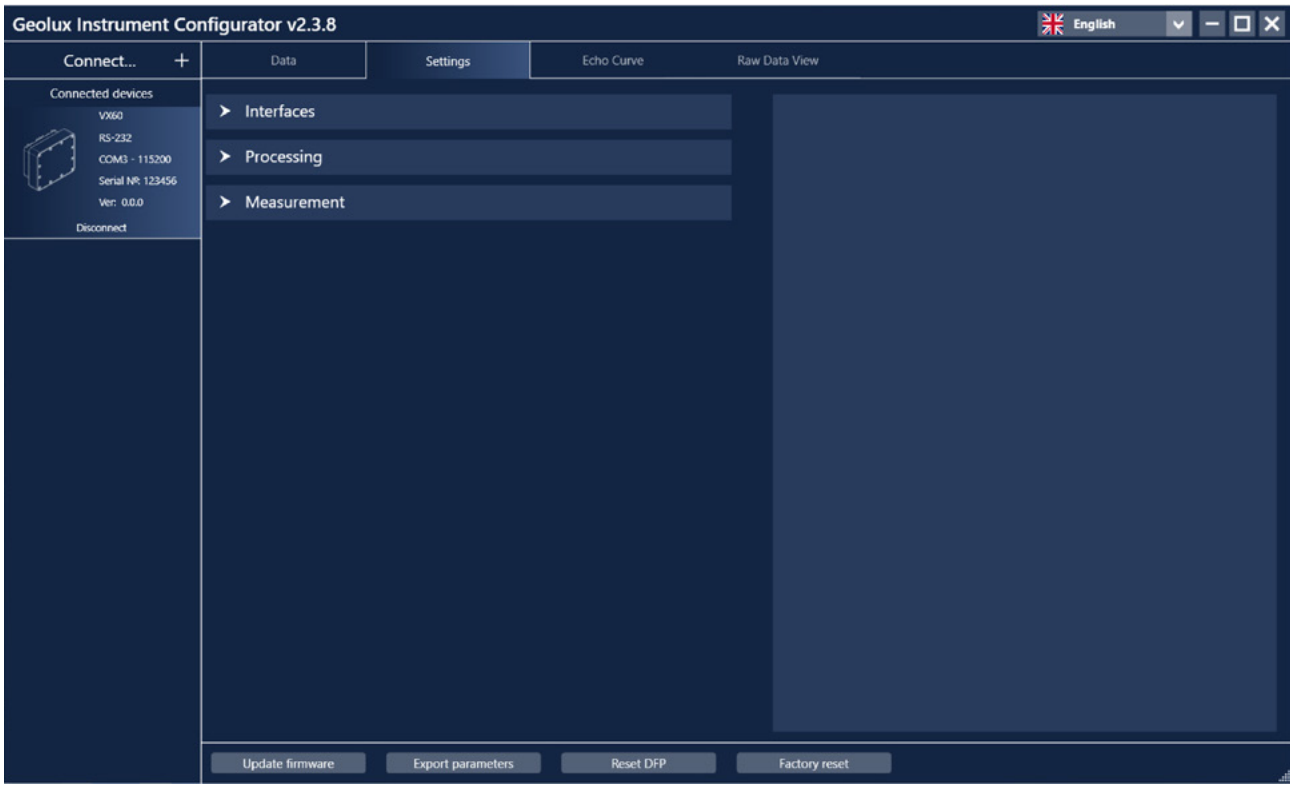

Picture 22. Settings page for VX60 surface velocity radar.

Settings are organized into three groups: Interfaces, Processing and Measurements. Selecting a group displays all associated settings.

When a setting is selected or modified, a detailed description is displayed on the right side of the window. Detailed descriptions of all parameters are also given in the Chapter 5 of this User manual. After changing a parameter, a Set button appears next to the modified field. Clicking Set confirms and saves the new value to the device.

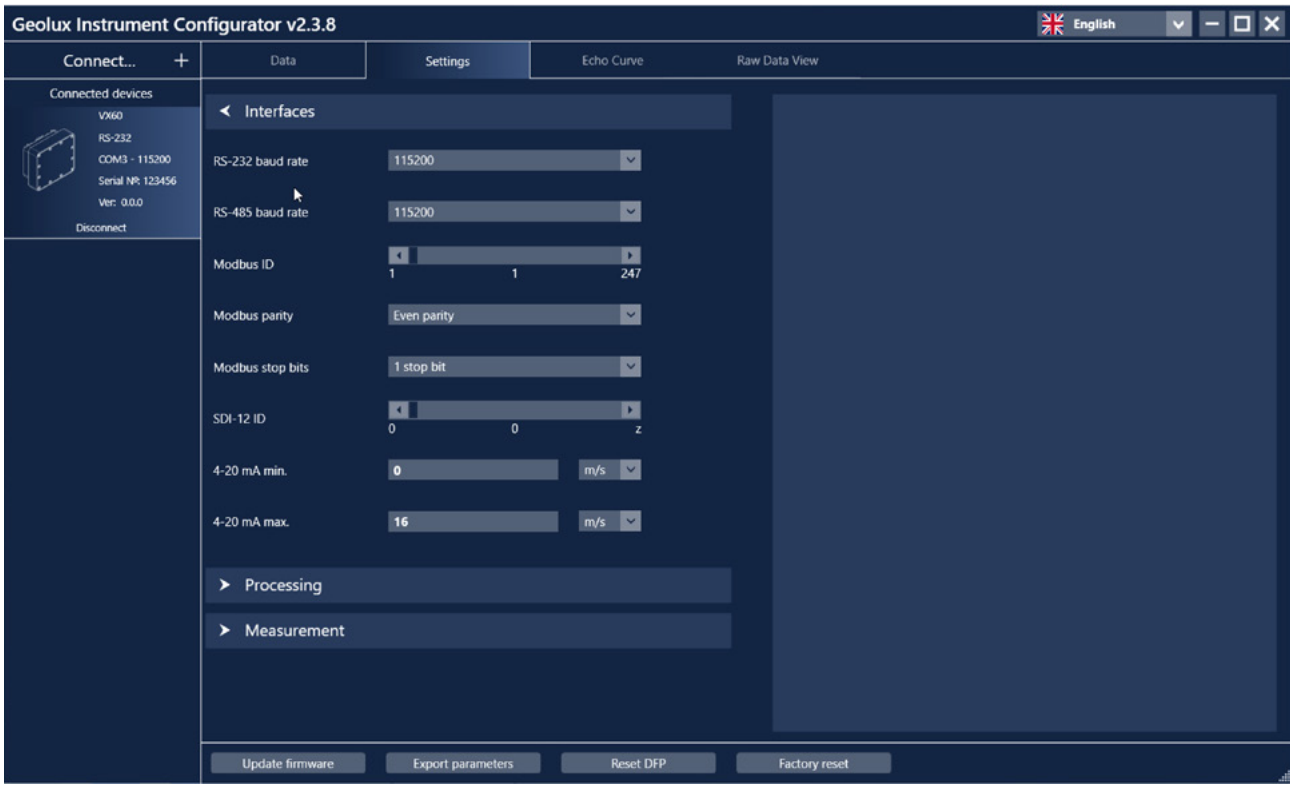

Picture 23. Interface settings

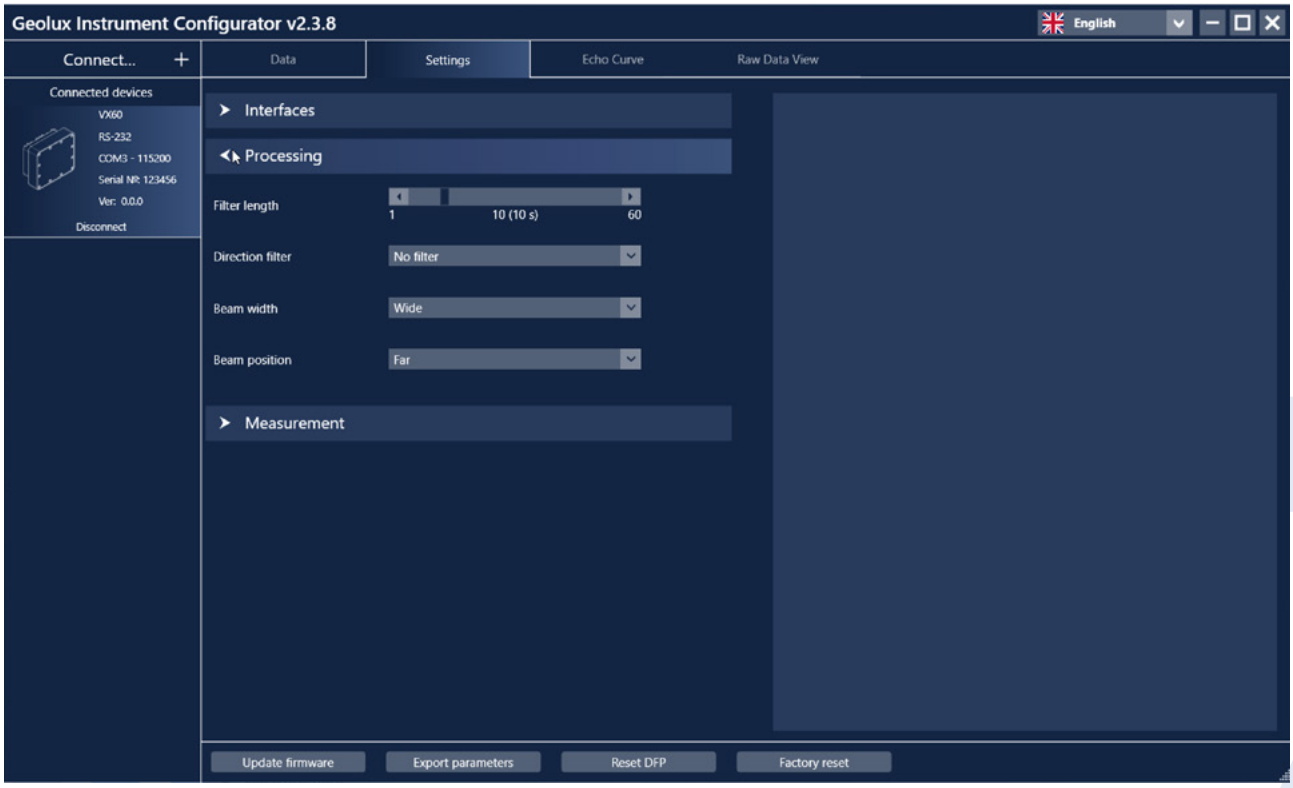

Picture 24. Data processing settings

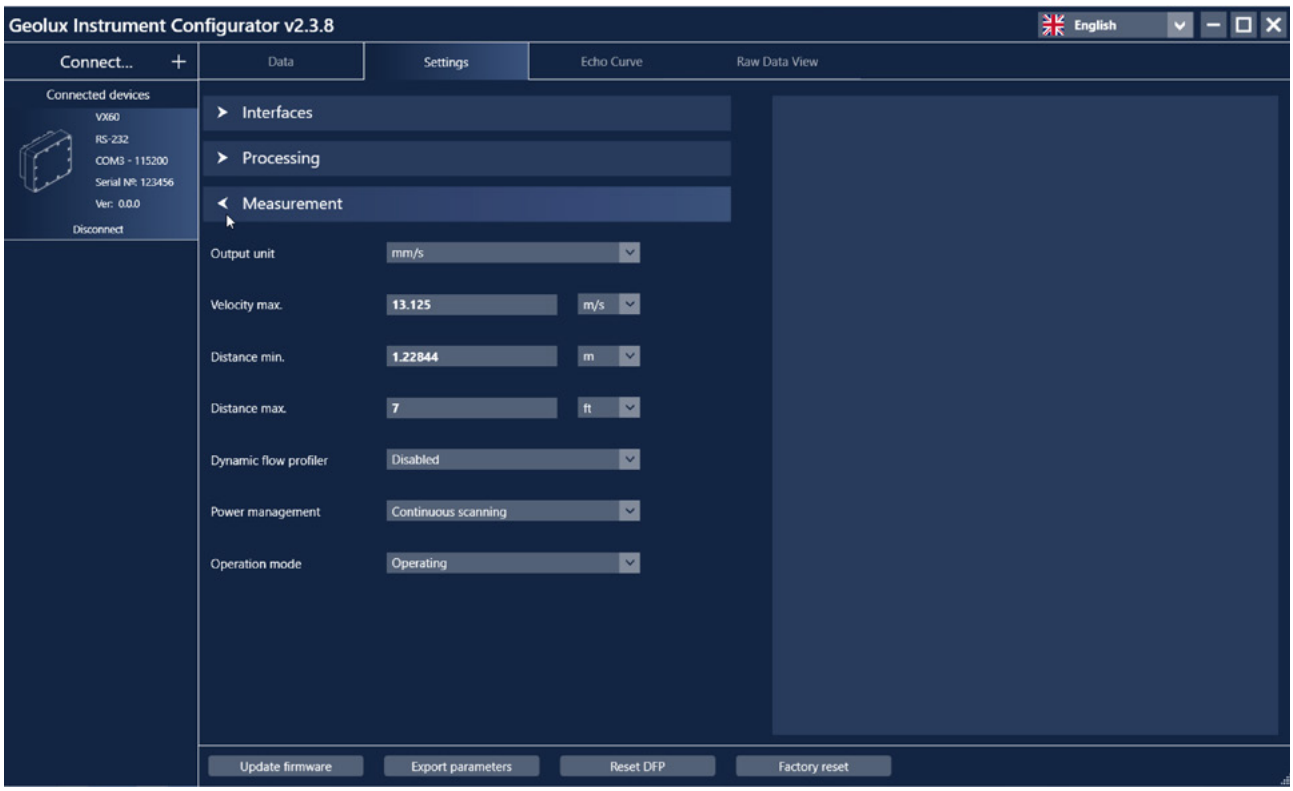

Picture 25. Measurement settings

Additional functions available in the Settings tab include:

- **Update firmware** – Updates the device firmware to a newer version.
- **Export parameters** – Saves all device parameters to a text file for review.
- **Reset DFP** – Clears all accumulated DFP history data.
- **Factory reset** – Restores all parameters to their default values.

Echo Curve Acquisition

The Echo Curve tab allows visualization and acquisition of the radar echo signal. This is useful for diagnosing potential problems with weak signal or incorrect measurements. The Echo Curve tab can display two types of echo curves: the rangefinder echo curve and the velocity distribution echo curve. The echo curves will start loading and updating automatically as soon as the Echo Curve tab is opened.

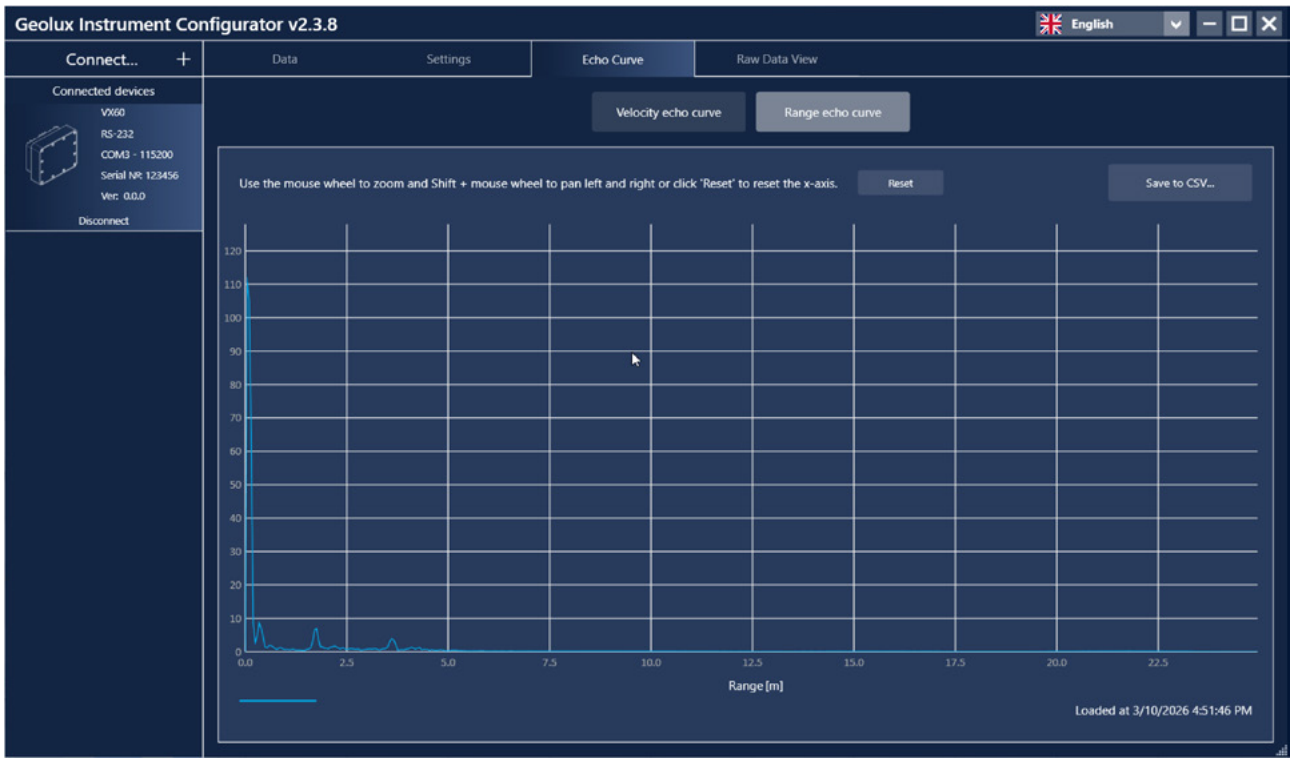

Picture 26. Echo curve display

Raw Data View

The Raw Data tab enables monitoring of the raw data stream transmitted by the device. This is useful for diagnosing problems with the communication interfaces.

- Clicking Start begins raw data acquisition.
- Clicking Stop ends data acquisition.
- Clicking Clear removes previously displayed data.

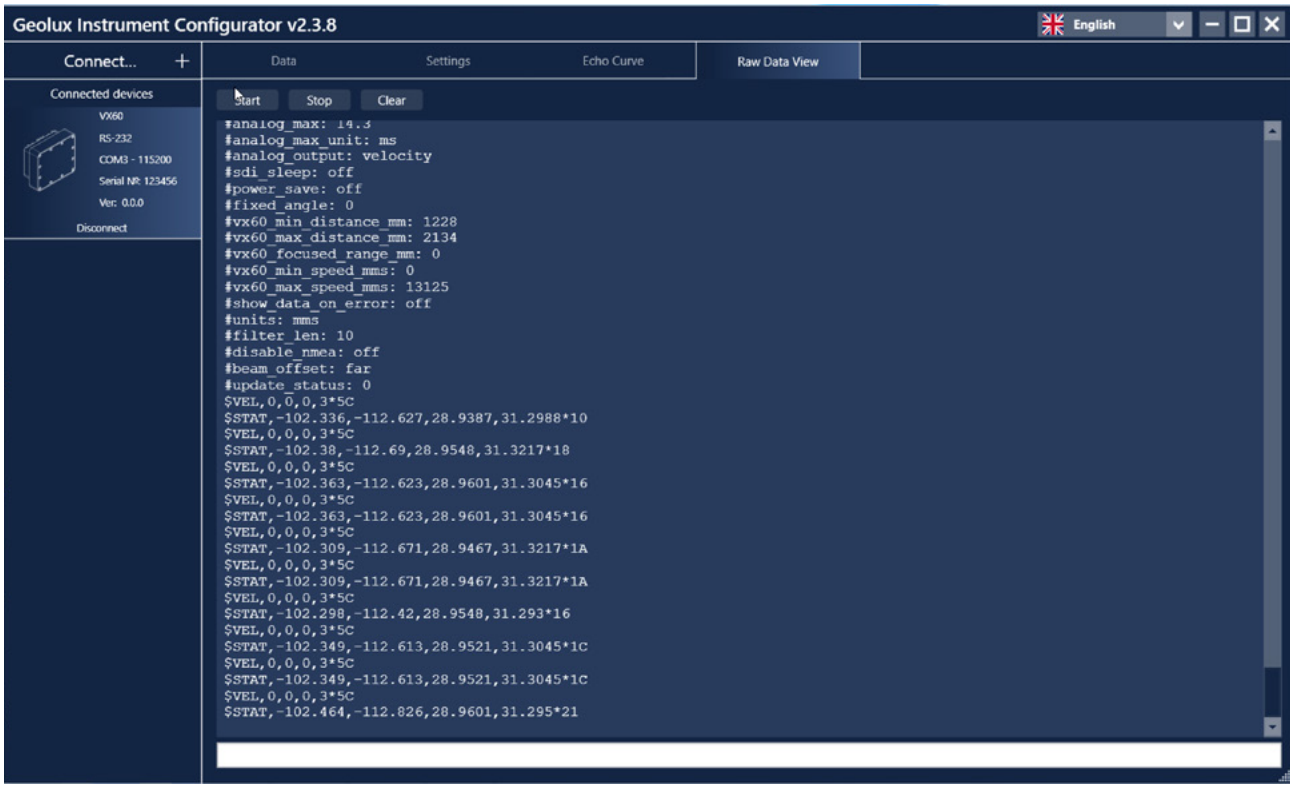

Picture 27. Raw data view page

8 Troubleshooting

The Instrument Does Not Connect To The PC Application Over RS-232 Connection

1. Make sure that the cable is properly connected to the instrument. Check that the cable M12 circular connector is firmly connected and screwed to the instrument. It is not sufficient to simply attach the cable connector to the instrument connector, the cable connector must be screwed into the instrument connector.

2. Check power supply. Make sure that the power is being supplied to the instrument. A direct-current voltage, between 9 and 27 Volts must be connected to brown (+) and white (-) wires of the instrument cable. The power supply must be able to deliver at least 500 mA of current.

3. Check RS-232 connector. The yellow, green, and grey wires from the instrument cable must be properly connected to the serial port on the computer. Make sure that the grey wire (signal ground) is connected – the RS-232 connection will not work if the signal ground is not connected. Also, make sure that the yellow (device Rx) and green (device Tx) are properly connected. If you are using a standard DB9 type connector on the PC computer, the wires should be connected like in the following diagram:

4. Make sure that you are using the correct COM port. If there are multiple COM ports available on your computer, make sure that you are selecting the correct COM port in the PC application. If you are not certain which COM port number is assigned to the COM port that is being used to establish a connection with the instrument, try setting up the connection with each COM port available in the system, until the connection is established.

5. Make sure that the COM port is not already open. Only one application may use a single COM port in the system. Make sure that no other open application uses the same COM port that you are trying to open.

6. Try restarting the application and/or the computer. Close and reopen the configurator application and try to establish the connection again. Restart your computer and try to establish the connection to the instrument again.

The Instrument Does Not Respond Over Modbus (RS-485) Interface

1. Make sure that the cable is properly connected to the instrument. Check that the cable M12 circular connector is firmly connected and screwed to the instrument. It is not sufficient to simply attach the cable connector to the instrument connector, the cable connector must be screwed into the instrument connector.

2. Check power supply. Make sure that the power is being supplied to the instrument. A direct-current voltage, between 9 and 27 Volts must be connected to brown (+) and white (-) wires of the instrument cable. The power supply must be able to deliver at least 500 mA of current.

3. Check RS-485 connector. Make sure that the RS-485 lines on the instrument cable are properly connected to the RS-485 connector. The dark red wire should be connected to A+ line, and the orange wire should be connected to B- line. Make sure that the A+ and B- lines are not swapped. Make sure that you have correctly identified and connected the dark red wire, as there is also a bright red wire that is used for the 4-20mA positive output terminal. It is possible to misidentify the wire and to connect the bright red wire to A+ instead of dark red wire.

4. Check that you are using the correct slave device ID. The default Modbus device ID is 1. The Modbus device ID can be changed by connecting the instrument to the PC application (over RS-232 connection). Connect the instrument to the PC using RS-232 connection. Open the Geolux Instrument Configurator application and establish a connection between the instrument and the PC. Then check the Device ID parameter and make sure that it is the same as the slave device ID used in issued Modbus requests.

5. Make sure that there are no two devices on the bus with the same Device ID. Modbus allows to have multiple devices connected on the same bus simultaneously. Each device must have a unique slave device ID assigned, so that the bus master can distinguish between the devices. If two or more devices are assigned the same slave device ID, a bus conflict will happen and prohibit the master to correctly communicate with the slave devices. To resolve this problem, change the instrument's slave device ID to a unique number through the Geolux Instrument Configurator PC application.

6. Check that you are using the correct Modbus connection parameters (baud rate, parity, stop bits). The default Modbus connection parameters are 9600 bps, even parity, 1 stop bit. These parameters can be changed by connecting the instrument to the PC application (over RS-232 connection). Connect the instrument to the PC using RS-232 connection. Open the Geolux Instrument Configurator application and establish a connection between the instrument and the PC. Then check and verify that all Modbus connection parameters are correct.

The 4-20 mA Output Is Not Correct

1. Make sure that the cable is properly connected to the instrument. Check that the cable M12 circular connector is firmly connected and screwed to the instrument. It is not sufficient to simply attach the cable connector to the instrument connector, the cable connector must be screwed into the instrument connector.

2. Check power supply. Make sure that the power is being supplied to the instrument. A direct-current voltage, between 9 and 27 Volts must be connected to brown (+) and white (-) wires of the instrument cable. The power supply must be able to deliver at least 500 mA of current.

3. Make sure that the wires from the cable are properly connected. For 4-20 mA readout, the bright red wire from the instrument cable must be connected to the positive (+) input, and the purple wire must be connected to the negative (–) input of the 4-20 mA interface.

4. Check the instrument configuration parameters related to 4-20 mA output. Connect the instrument over RS-232 connection to the Geolux Instrument Configurator application. Check the parameters related to 4-20 mA: 4-20 mA min. and 4-20 mA max. Properly configure these parameters.

The Instrument Is Operating, But It Does Not Report Surface Velocity Measurement Or Reports Incorrect Measurement

1. Check that the instrument is positioned properly. Make sure that the instrument is installed above the water surface, pointing toward the water surface at a vertical angle. Recommended minimum height above the water surface is 1 meter. Recommended forward tilt angle is 60 degrees. The side tilt angle should not exceed 10° in any direction.

2. Check that there are no obstructions between the instrument and the water surface. There should be no obstructions between the instrument and the water surface, so that the radar waves can freely travel from the instrument's antenna to the water surface and back.

3. Check that the distance between the instrument and the water surface is within the instrument's operating range. Use a tape measure or a similar tool to measure the distance between the instrument's antenna and the water surface. If the distance to the water surface is greater than the instrument's operational range, the instrument will not be able to measure the surface velocity.

A Appendix A: Mechanical Assembly

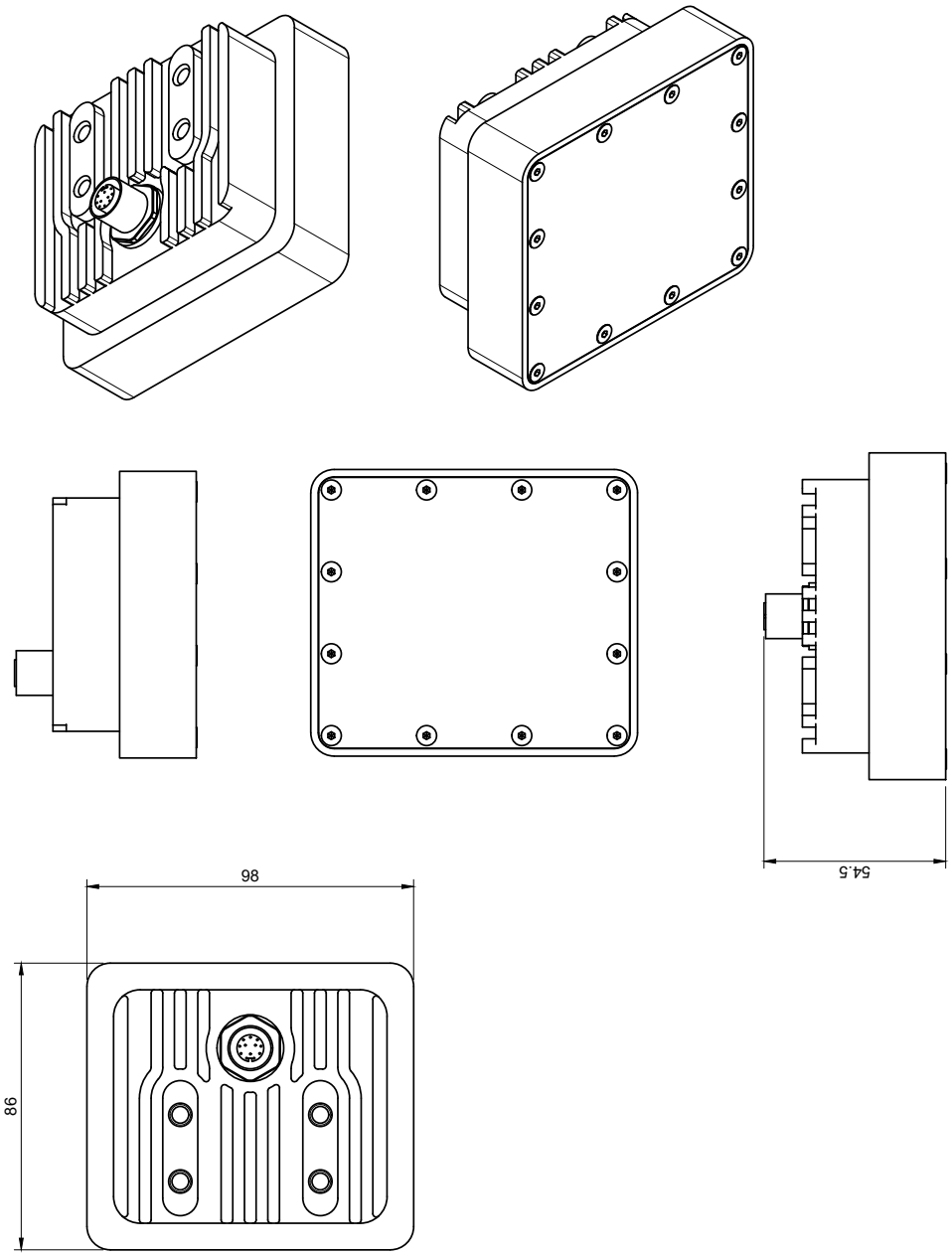

Picture 28. Mechanical assembly of the device

B Appendix B: **Holder Accessory Assembly**

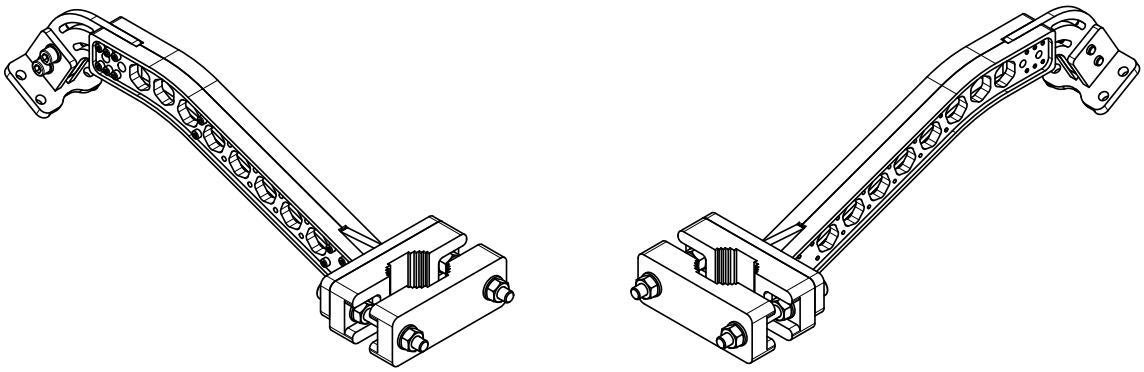

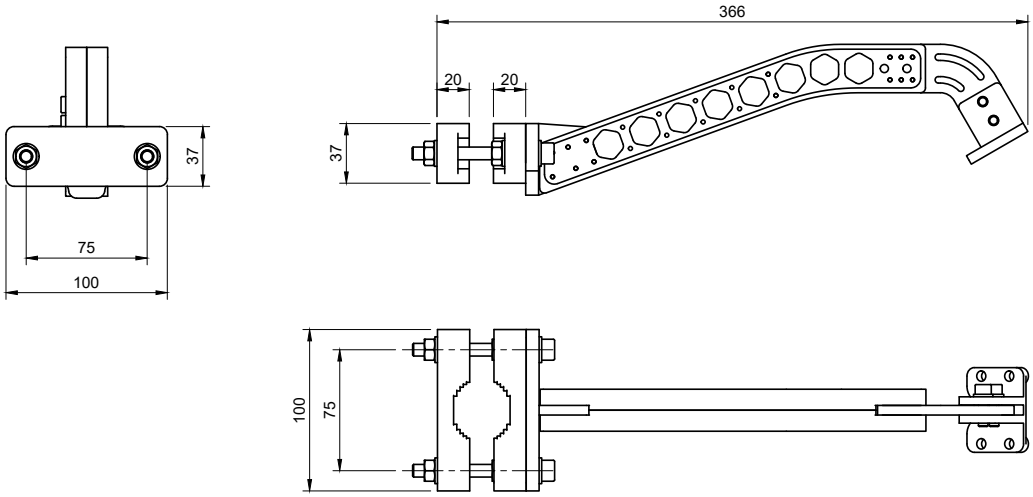

Picture 29. Mechanical assembly of the optional device holder (available separately)