USER GUIDE

VDL200

Vaisala · Authorized Partner

Distributed by AKRIBIS

M212938EN-E

User Guide

Data Logger for continuous monitoring systems

VDL200

VAISALA

AKRIBIS · www.akribis.info · contacto@akribis.info

PUBLISHED BY

Vaisala Oyj
Vanha Nurmijärventie 21, FI-01670 Vantaa, Finland
P.O. Box 26, FI-00421 Helsinki, Finland
+358 9 8949 1
vaisala.com
docs.vaisala.com

© Vaisala 2026

No part of this document may be reproduced, published, or publicly displayed in any form or by any means, electronic or mechanical (including photocopying), nor may its contents be modified, translated, adapted, sold, or disclosed to a third party without prior written permission of the copyright holder. Translated document and translated portions of the document are based on the original English version. Parts of the translation may have been created using machine-assisted translation. In ambiguous cases, the English version is applicable, not the translation.

The contents of this document are subject to change without prior notice.

Local rules and regulations applicable to the products and services may vary, and they shall take precedence over the information contained in this document. Vaisala makes no representations on this document's compliance with the local rules and regulations applicable at any given time, and hereby disclaims any and all responsibilities related thereto. You are instructed to confirm the applicability of the local rules and regulations and their effect on the intended use of the products and services.

This document does not create any legally binding obligations for Vaisala towards customers or end users. All legally binding obligations are set forth exclusively in the applicable contract or in the relevant set of General Conditions of Vaisala (vaisala.com/policies).

This product contains software developed by Vaisala or third parties. Use of the software is governed by license terms and conditions included in the applicable contract or, in the absence of separate license terms and conditions, by the General License Conditions of Vaisala Group.

This product may contain open-source software (OSS) components. In the event this product contains OSS components, then such OSS is governed by the terms and conditions of the applicable OSS licenses, and you are bound by the terms and conditions of such licenses in connection with your use and distribution of the OSS in this product. Applicable OSS licenses are included in the product itself or provided to you on any other applicable media, depending on each individual product and the product items delivered to you.

Table of contents

1. About this document ... 7
1.1 Version information ... 7
1.2 Related manuals ... 8
1.3 Documentation conventions ... 9
1.4 Trademarks ... 9

2. Product overview ... 10
2.1 Introduction to VDL200 data logger ... 10
2.2 Probe options ... 11
2.3 Probe connection options ... 14
2.4 Parts ... 15
2.5 Display ... 17
2.6 Abbreviations of measurement parameters ... 18
2.7 Status icons ... 20
2.8 Backup batteries ... 20
2.9 Service port ... 21
2.9.1 Files and folders in the USB file system ... 22
2.10 ESD protection ... 22
2.11 Safety ... 23

3. Installation ... 24
3.1 Installing VDL200 ... 24
3.2 Mounting probes ... 28
3.2.1 Probe holder ... 28
3.2.2 CO_2 probe mounting kit ... 30
3.2.3 Mounting HMP110 probes ... 32
3.2.4 Mounting HMP63 and HMP115 probes ... 32
3.2.5 Mounting TMP115 probes ... 33
3.2.6 Mounting GMP251 and GMP252 probes ... 34
3.2.7 Mounting ANP115 Analog Input Probe ... 34

4. Operation ... 36
4.1 Probe detection ... 36
4.2 Measurement sampling rate ... 37
4.3 Viewing device information ... 37

5. Remote management ... 39
5.1 Remote management with viewLinc Enterprise Server ... 39
5.1.1 Port identifiers in viewLinc ES ... 39
5.2 Remote management with Jade Smart Cloud ... 40

6. Using VDL200 with Vaisala Insight Software ... 42
6.1 Vaisala Insight PC software ... 42
6.2 Connecting to Insight software ... 42
6.3 Configuring settings using Insight software ... 43

6.4 Viewing and downloading VDL200 data files using Insight software..... 45

7. Maintenance..... 47
7.1 Cleaning..... 47
7.2 Replacing batteries..... 47
7.3 Replacing and swapping probes..... 49
7.4 Calibration and adjustment..... 49
7.5 VDL200 firmware update..... 50
7.5.1 Updating firmware using Insight..... 50
7.5.2 Updating firmware using USB file transfer..... 52

8. Troubleshooting..... 53
8.1 Problem situations..... 53
8.2 Error messages..... 53
8.3 Basic troubleshooting procedure..... 56
8.4 Downloading device diagnostics..... 59
8.5 Product returns..... 59

9. Technical data..... 60
9.1 VDL200 technical specification..... 60
9.2 Accessories and spare parts..... 63
9.3 Dimension drawings..... 65

10. Vaisala services..... 69
10.1 Service centers..... 69
10.2 Technical support..... 69
10.3 Warranty..... 69

Appendix A: Recycling instructions..... 71

Index..... 75

List of figures

Figure 1 VDL200 and its network connections.....10
Figure 2 Connecting probes to VDL200.....14
Figure 3 Front parts.....15
Figure 4 Connectors.....16
Figure 5 Rear parts.....16
Figure 6 Mounting bracket parts.....17
Figure 7 Display layout.....17
Figure 8 Display when errors are active.....18
Figure 9 Probe holder ASM213382.....28
Figure 10 Example probe in the probe holder.....29
Figure 11 Probe support accessory mounting options.....31
Figure 12 HMP110 probe.....32
Figure 13 HMP63 and HMP115 probes.....32
Figure 14 TMP115 probe.....33
Figure 15 GMP251 probe.....34
Figure 16 GMP252 probe.....34
Figure 17 ANP115 open wires model.....35
Figure 18 ANP115 door switch model.....35
Figure 19 Detection of a new RH + T probe in port 1.....36
Figure 20 Hosts and Devices tab in viewLinc ES version 5.2.1.....40
Figure 21 Configuring VDL200 settings with Insight.....43
Figure 22 VDL200 dimensions.....65
Figure 23 VDL200 mounting bracket hole dimensions.....66
Figure 24 HMP110 and HMP110T probe dimensions.....66
Figure 25 HMP63, HMP63T, HMP115, and HMP115T probe dimensions.....66
Figure 26 TMP115 probe dimensions.....67
Figure 27 GMP251 probe dimensions.....67
Figure 28 GMP252 probe dimensions.....67
Figure 29 ANP115 probe dimensions.....68
Figure 30 ANP115 door switch model dimensions.....68
Figure 31 Materials for recycling.....72

List of tables

Table 1 Document versions (English) 7
Table 2 Related manuals 8
Table 3 Measurement parameter abbreviations on VDL200 display 18
Table 4 Status icons on VDL200 display 20
Table 5 Files and folders in the USB file system of VDL200 22
Table 6 Automatic selection of measurement parameters 36
Table 7 Example channel index mapping 40
Table 8 Troubleshooting table 53
Table 9 VDL200 error messages 54
Table 10 VDL200-compatible probes 60
Table 11 VDL200-compatible systems and software 60
Table 12 VDL200 inputs and outputs 60
Table 13 VDL200 operating environment 60
Table 14 VDL200 powering 61
Table 15 VDL200 operating time on battery power 61
Table 16 VDL200 data logging and user interface specifications 62
Table 17 VDL200 compliance 62
Table 18 VDL200 mechanical specifications 63
Table 19 VDL200 accessories 63
Table 20 Selected probe-specific accessories 64
Table 21 VDL200 spare parts 64
Table 22 VDL200 probes 64

1. About this document

1.1 Version information

This document provides instructions for installing, using, and maintaining Vaisala VDL200 Data Logger.

Table 1 Document versions (English)

Document code	Date	Description
M212938EN-E	June 2026	Updated for firmware version 1.3.0. Added support for connecting 4 probes using splitter cables. New sections: • Probe connection options (page 14) • Port identifiers in viewLinc ES (page 39) Updated sections: • Display (page 17) • Installing VDL200 (page 24) • Probe detection (page 36) • Problem situations (page 53) • Error messages (page 53) • VDL200 technical specification (page 60) • Accessories and spare parts (page 63) At time of publication of this document, Jade Smart Cloud has the following limitations when VDL200 is used with Analog Input Probe ANP115: • Boolean mode is not supported. • Door switch mode is not supported. • ANP115 door switch model is not supported.
M212938EN-D	March 2026	Added HMP63 and HMP63T as probe options. Updated sections: • Probe options (page 11) • Installing VDL200 (page 24) • Mounting HMP63 and HMP115 probes (page 32) • Probe detection (page 36) • VDL200 technical specification (page 60) • Accessories and spare parts (page 63) • Dimension drawings (page 65)

Document code	Date	Description
M212938EN-C	January 2026	Updated for firmware version 1.2.0. Added support for Jade Smart Cloud monitoring system. Moved sections related to Vaisala services and product warranty to Vaisala services chapter. New sections: • Remote management with Jade Smart Cloud (page 40) • Vaisala Insight PC software (page 42) • Connecting to Insight software (page 42) • Viewing and downloading VDL200 data files using Insight software (page 45) • Problem situations (page 53) Updated sections: • Introduction to VDL200 data logger (page 10) • Probe options (page 11) • Installing VDL200 (page 24) • Basic troubleshooting procedure (page 56) • VDL200 technical specification (page 60) • Dimension drawings (page 65)

1.2 Related manuals

For the latest versions of these documents, see docs.vaisala.com.

Table 2 Related manuals

Document code	Name
M211060EN	Vaisala HMP60 and HMP110 Series Humidity and Temperature Probes User Guide
M211799EN	Vaisala GMP251 and GMP80P Carbon Dioxide Probe User Guide
M211897EN	Vaisala GMP252 Carbon Dioxide Probe User Guide
M213202EN	Vaisala ANP115 Analog Input Probe User Guide
M212933EN	Vaisala viewLinc Enterprise Server 5.2 User Guide
M212670EN	Vaisala Jade Smart Cloud User Guide

1.3 Documentation conventions

WARNING! Alerts you to a hazardous situation that, if not avoided, could result in death or serious injury.

CAUTION! Alerts you to a hazardous situation that, if not avoided, could result in minor or moderate injury.

NOTICE! Alerts you to a situation that, if not avoided, could result in the product to be damaged, or important data to be lost.

Highlights important information on using the product.

1.4 Trademarks

Vaisala®, CARBOCAP®, and HUMICAP® are registered trademarks of Vaisala Oyj.

Microsoft® and Windows® are either registered trademarks or trademarks of Microsoft Corporation in the United States and other countries.

All other product or company names that may be mentioned in this publication are trade names, trademarks, or registered trademarks of their respective owners.

2. Product overview

2.1 Introduction to VDL200 data logger

VDL200 is an Ethernet-connected data logger for continuous monitoring systems. It provides high-accuracy measurements from up to 4 detachable humidity, temperature, and carbon dioxide probes. VDL200 also supports the ANP115 Analog Input Probe for recording and display of measurements from analog and boolean signals. Suitable applications include real-time measurements in environments where wired connections are preferred. VDL200 is compatible with the Vaisala viewLinc Enterprise Server software and Jade Smart Cloud monitoring solution.

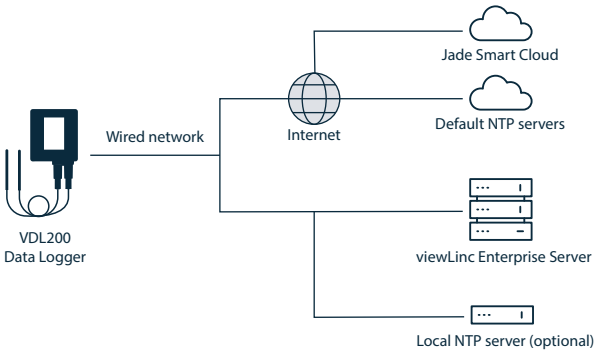

Figure 1 VDL200 and its network connections

VDL200 is powered from the Ethernet connector using Power over Ethernet (PoE). If the network does not provide PoE, a separate PoE power supply must be used. Single-use 1.5 V AA size batteries are used as a temporary backup power source when PoE power is not available. Operating time on battery power depends on the inserted battery type and power usage of the connected measurement probes.

VDL200 maintains accurate time by synchronizing with a Network Time Protocol (NTP) server. VDL200 must be able to synchronize with an NTP server, otherwise it cannot record or send measurement data.

When operating on battery power, VDL200 turns off its network connection to save power. If VDL200 has already synchronized its internal clock with a time server, it keeps recording measurement data to its local memory. When PoE power is reconnected, the network connection is restored and the connected monitoring system automatically retrieves any locally recorded data that is needed.

The following ports are used in the communication between VDL200 and the servers:

- TCP port 8883 (viewLinc Enterprise Server)
- TCP port 443 (Jade Smart Cloud)

- UDP port 123 (NTP servers)

More information

- VDL200 technical specification (page 60)

2.2 Probe options

Probe	Description [1)]	Installation notes
HMP110 and HMP110T 	**Humidity and temperature** probe for measurement in demanding conditions. Robust stainless steel construction. Temperature-only version HMP110T is also available. Measurement temperature range −40 ... +80 °C (−40 ... +176 °F). When ordered with VDL200 data logger, HMP110 and HMP110T probes are equipped with the membrane filter. For other filter types that are available as separately ordered accessories, see HMP60 and HMP110 Series User Guide (M211060EN).	Suitable for measurement inside chambers, incubators, fridges, and freezers. Versatile mounting options using accessories. A magnetic probe holder (item code ASM213382) is included when the probe is ordered with VDL200. Must be connected to VDL200 using a suitable cable. A 3 m M8/M8 probe cable (item code CBL211293-3MSP) is included when the probe is ordered with VDL200.
HMP63, HMP63T, HMP115 and HMP115T 	**Humidity and temperature** probes for general purpose measurement. HMP63T and HMP115T are temperature-only versions. A calibration certificate is not included with HMP63 and HMP63T. Operating temperature range −40 ... +60 °C (−40 ... +140 °F). When ordered with VDL200 data logger, these probes are equipped with the membrane filter. For other filter types that are available as separately ordered accessories, see HMP60 and HMP110 Series User Guide (M211060EN).	Ideal choice for ambient measurement. Can be connected to VDL200 directly or using an M8/M8 probe cable (for example, CBL211293-3MSP).

Probe	Description [1)]	Installation notes
TMP115	**Temperature** probe for measurement in a wide range of conditions. Available as 50 cm (1 ft 7.7 in) and 3 m (9.8 ft) long versions. Length includes the probe body and sensor tip. Measurement temperature range −196 ... +150 °C (−320 ... +302 °F). Operating temperature range of the probe body is −40 ... +60 °C (−40 ... +140 °F).	Suitable for measurement inside chambers, fridges, and freezers. Sensor tip withstands immersion in glycol and liquid nitrogen. Can be connected to VDL200 directly or using an M8/M8 probe cable (for example, CBL211293-3MSP). Use the thermal dampener block accessory (item code 236310SP) to add thermal mass to the sensor tip.
GMP251 and GMP252	**Carbon dioxide** probes for %-level measurements (GMP251) and ppm-level measurements (GMP252). Designed for use in demanding applications such as life science incubators. Operating temperature range −40 ... +60 °C (−40 ... +140 °F). When ordered with VDL200 data logger, the probe is delivered with an M8/M12 adapter cable (item code CBL211291SP) and the CO_2 probe mounting kit (item code ASM214253SP). The kit includes a probe holder that has attachments for the CO_2 probe, a Ø 12 mm probe (for example, HMP110) and the sensor tip of the TMP115 probe.	Must be connected to VDL200 using an M8/M12 adapter cable (for example, the included flat cable CBL211291SP).

Probe	Description [1]	Installation notes
ANP115	ANP115 is a single channel **analog input probe** for converting the voltage or current output of an analog sensor into a digital output. The channel can be configured as generic boolean input for use as an alarm switch, for example. ANP115 has open wires by default, but it can also be ordered with an M8 field connector kit. Model with a **door switch** is also available.	ANP115 must be configured before installation using Insight PC software and Vaisala USB cable (item code 219690). Model with door switch is preconfigured and does not require additional configuration. Can be connected to VDL200 directly or using an M8/M8 probe cable (for example, CBL211293-3MSP).

1) See probe datasheets in docs.vaisala.com for detailed probe specifications.

More information

- Accessories and spare parts (page 63)

2.3 Probe connection options

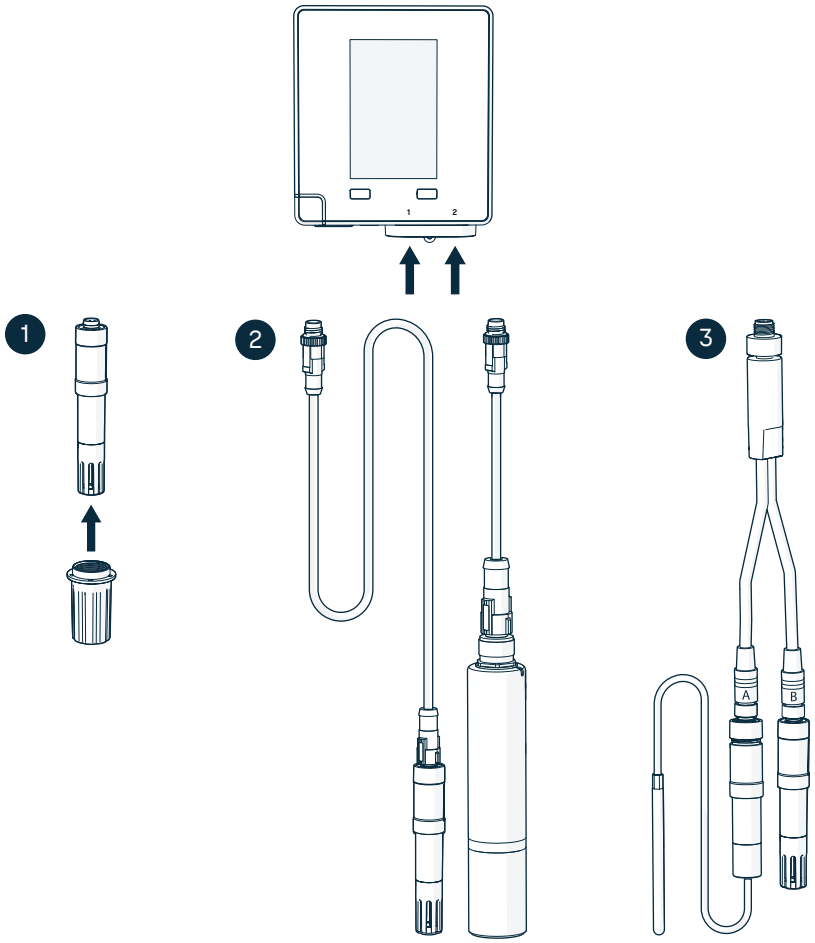

Figure 2 Connecting probes to VDL200

1. **Direct connection** (ANP115, HMP63/T, HMP115/T, and TMP115 only): Verify the orientation of the connector pins and push the probe to the probe port. Secure the probe using a probe nut.
2. **Cable connection**: Connect the cable to the probe port, and secure it using the locking ring of the cable connector. Then connect the probe to the cable.
3. **Cable connection using splitter cable**: Connect the splitter cable to the probe port, and secure it using the locking ring on the connector. Connect the probes directly to the connectors marked **A** and **B**, or extend the splitter using a probe cable. GMP251 and GMP252 probes must be connected using a probe cable that has an M12 connector.

2.4 Parts

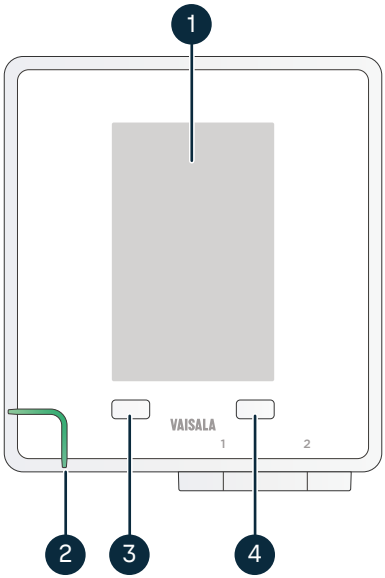

Figure 3 Front parts

1. Display
2. Status LED
3. Left button
4. Right button

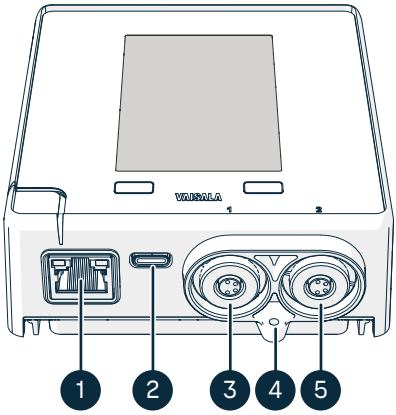

Figure 4 Connectors

1 Ethernet port (RJ-45)
2 Service port (USB-C)
3 Probe port 1 (4-pin M8 female)
4 Place for locking screw (3×8 mm screw recommended)
5 Probe port 2 (4-pin M8 female)

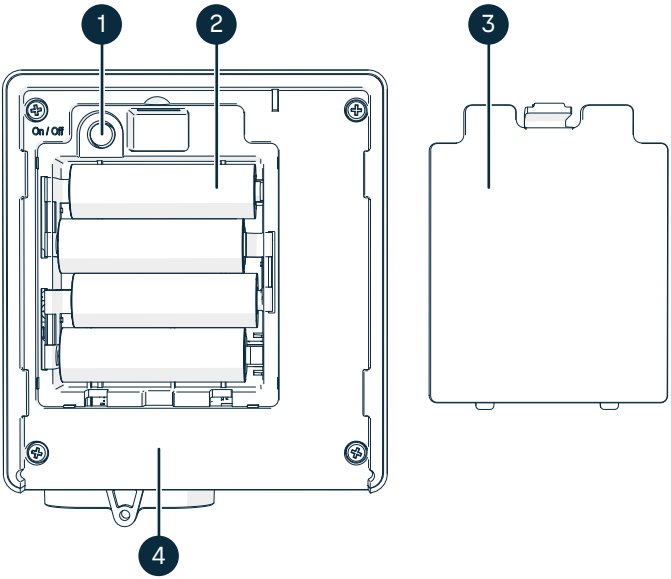

Figure 5 Rear parts

1 Power button
2 Backup batteries (4 pcs 1.5 V alkaline (LR6) or lithium (FR6))
3 Battery cover
4 Type label area

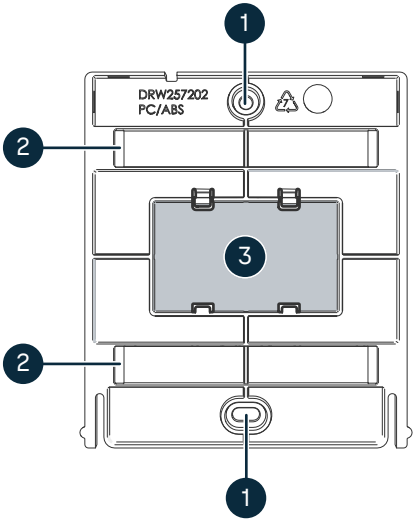

Figure 6 Mounting bracket parts

1 Screw mounting holes
2 Cable tie mounting holes
3 Mounting magnet

2.5 Display

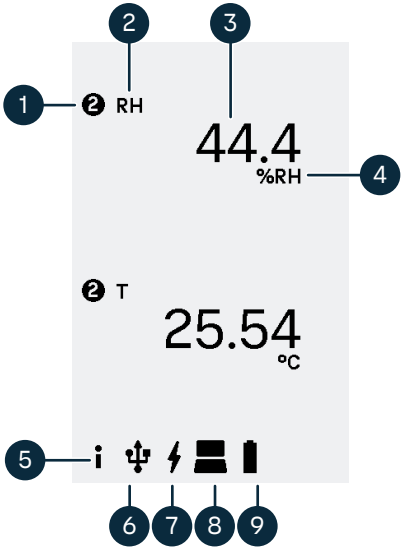

Figure 7 Display layout

1 Identifier of the probe port that is the source of this measurement. Branch B of a splitter cable is shown as 1B or 2B, depending on the port.
2 Abbreviation of measurement parameter
3 Latest measured value
4 Unit of measurement
5 Information icon. Touching the left button (below the icon) opens the device information page.
6 Service port connection status
7 PoE power supply status
8 Host system connection status
9 Battery level

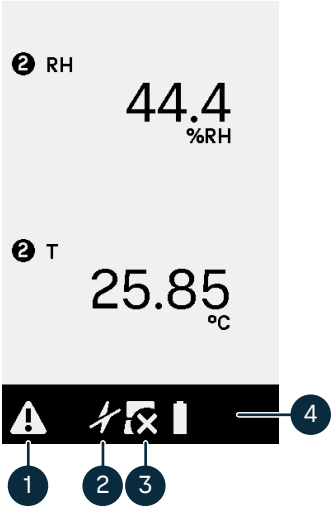

Figure 8 Display when errors are active

1. Error icon. When the error icon is shown, touching the left button opens the error page.
2. PoE power supply status. In this example PoE is not connected.
3. Host system connection status. In this example the Ethernet connection is not available as PoE is not connected.
4. The color of the icon row is inverted when there are active errors.

2.6 Abbreviations of measurement parameters

VDL200 shows the names of measurement parameters on its display using abbreviations. Table 3 (page 18) provides the mapping between the name and abbreviation of parameters supported by VDL200-compatible probes.

Table 3 Measurement parameter abbreviations on VDL200 display

Measurement parameter	Abbreviation on display
Absolute humidity	a
Boolean input	Bin
Carbon dioxide concentration	CO2
Concentration	C
Conductivity	σ
Current	I
Dew point temperature	Td
Dew/frost point temperature	Td/f
Differential pressure	Dp

Measurement parameter	Abbreviation on display
Door	Door
Enthalpy	h
Level	Level
Mass concentration	ρi
Mass flow rate	u
Mass fraction	wi
Mixing ratio	x
Molar concentration	ci
Oxygen concentration	O2
Particle count	n
Pressure	p
Relative humidity	RH
Resistivity	r
Rotational speed	n
Status	Status
Temperature	T
Velocity	v
Vibration velocity	v
Voltage	U
Volume	V
Volumetric flow rate	Q
Water concentration	H2O
Other	Ain

More information

- Probe detection (page 36)

2.7 Status icons

Table 4 Status icons on VDL200 display

Icon(s)	Icon name	Meaning
	Information	Access the device information page by touching the button below this icon.
	Error	A device error is active. Touch the button below this icon to access the error page and the device information page.
	Service port active	Service port is in use.
	PoE available	Device is currently powered by Power over Ethernet (PoE).
	PoE not available	PoE is not available and the device is operating on backup battery power. This state is considered an error state. Ethernet connection is disabled to reduce power consumption, which prevents communication with the monitoring system and the time servers.
	Connection OK	Monitoring system address is configured and the system is reachable. This icon is used for viewLinc Enterprise Server.
	Connection OK	Monitoring system is reachable. This icon is used for cloud-based monitoring systems such as Jade Smart Cloud.
	Connection unavailable	Ethernet connection is not available.
	Check connection	Connection to monitoring system not available.
	Battery charge	Approximate charge remaining in the backup batteries.
	Batteries empty	Backup batteries do not have sufficient charge to power the device.
	Batteries missing	Backup batteries are missing or inserted incorrectly.

More information

- Basic troubleshooting procedure (page 56)

2.8 Backup batteries

VDL200 uses 4 AA size primary (non-rechargeable) batteries with 1.5 V nominal voltage as its backup batteries. Battery power is used whenever Power over Ethernet (PoE) is not available and the device is not temporarily powered through the service port. The real-time clock of the VDL200 also relies on the batteries to retain accurate time when the device is turned off. There is a capacitor that powers the clock circuit for up to 30 minutes when the batteries are disconnected.

Compatible battery types

- 1.5 V alkaline batteries, designation IEC-LR6, ANSI 15A. Standard choice for most humidity and temperature measurement applications.
- 1.5 V lithium batteries, designation IEC-FR14505 (FR6), ANSI 15-LF. Typically higher capacity and better in cold temperatures. You must use lithium batteries in the following cases:
  - Temperature of the data logger's installation location is below 0 °C (+32 °F).
  - You are using CO_2 measurement probes, or ANP115 Analog Input Probes with sensor powering.

Do not use batteries with a nominal voltage higher than 1.5 V.

Use of rechargeable batteries is not recommended. VDL200 will not charge the batteries, and they are typically unsuitable due to different nominal voltage, capacity, and/or discharge curve.

Battery type setting

VDL200 has a configurable battery type setting that optimizes the operation of the battery charge indicator. This setting must be set according to the battery type (alkaline or lithium) when the device is taken into use, and changed if the battery type is changed.

More information

- Configuring settings using Insight software (page 43)
- Replacing batteries (page 47)

2.9 Service port

The service port of the data logger provides a local interface for performing configuration and service actions using a computer connection. The service port connector is a standard female USB-C connector. Standard USB cables with a USB-C connector can be used to connect the data logger to a computer.

- Any computer that supports Media Transfer Protocol (MTP) can view the files available in the file system of the data logger. Firmware updates can also be performed using this connection.
- Computers with a compatible Windows® operating system can use Insight PC software to configure the settings of the data logger and perform firmware updates.

The service port can be used to supply temporary operating power to the data logger. Do not attempt to use the service port to permanently power the data logger.

2.9.1 Files and folders in the USB file system

Following files and folders are present in the USB file system of the data logger. Vaisala support may request files from the data logger to help with solving your support request.

Except for the `\Device\Update\` folder that is used to load the firmware update file, the file system is read-only.

Table 5 Files and folders in the USB file system of VDL200

Path and file	Content
`\Device\Configuration\0.json`	User configuration settings of the data logger.
`\Device\Diagnostics\device_diagnostics.bin`	Diagnostic information for the data logger. Intended for use by Vaisala support.
`\Device\Identification\0.json`	Product identity parameters of the data logger.
`\Device\Identification\oss_licenses.zip`	Licenses and notices for open source software used in this product.
`\Device\Logs\All data\`	Measurement data files created by the data logger in JSON format.
`\Device\Update\`	Folder for firmware update. Copy the firmware update file here to start the update.
`\Probe Port 1\`	Identification and measurement files for probe in port 1.
`\Probe Port 2\`	Identification and measurement files for probe in port 2.

More information

- Updating firmware using USB file transfer (page 52)
- Downloading device diagnostics (page 59)
- Viewing and downloading VDL200 data files using Insight software (page 45)

2.10 ESD protection

Electrostatic discharge (ESD) can cause immediate or latent damage to electronic circuits. Vaisala products are adequately protected against ESD for their intended use. However, it is possible to damage the product by delivering an electrostatic discharge when touching, removing or inserting any objects inside the equipment housing.

Avoid touching component contacts or connectors when working with the device.

2.11 Safety

This product has been tested for safety. Note the following precautions:

WARNING! Explosion and combustion hazard
Use of incompatible batteries, inserting batteries incorrectly, and exposing batteries to high temperatures may cause batteries to explode, deflagrate, or leak flammable liquid or gas, which may lead to serious injury. Always verify the required battery type and the correct orientation inside the battery compartment. Also, make sure the temperature at the installation location is within the operating temperature range of the batteries.

WARNING! Magnetic hazard
The mounting bracket has a strong magnet. Magnets can cause serious harm by interfering with the operation of pacemakers and other implanted medical devices. Keep the magnet away from persons with such devices, and from any other devices that are sensitive to magnetic fields. Do not separate the magnet from the mounting bracket.

3. Installation

3.1 Installing VDL200

To install VDL200, you need the following tools and equipment:

- Content of the VDL200 product package:
  - VDL200 device with mounting bracket
  - According to order: measurement probes, probe cables, probe holders, and batteries
- If not included in the order: 4 pcs AA size 1.5 V batteries, type LR6 (alkaline) or FR6 (lithium)
- Cable ties or screws and wall plugs for mounting
- Cable tie cutter or screwdriver, depending on mounting method
- Ethernet cable
- Power over Ethernet (PoE) power source

For configuring the settings of VDL200:

- Computer with Microsoft Windows® operating system (64-bit version) and Insight PC software (version 1.3.0 or later) installed, and a free USB port
- USB-C cable for connecting VDL200 to a computer

NOTICE! VDL200 must synchronize its real-time clock with a time server before it can store and send data. If the error **System time not available** is active, no new measurement data is stored or sent to the monitoring system. Complete the installation steps to remove the error.

1. If you are using the ANP115 Analog Input Probe to convert an analog measurement signal, configure it using Insight PC Software before connecting it. See ANP115 Analog Input Probe User Guide (M213157EN).

   The door switch model of ANP115 is preconfigured and ready to use.

2. Slide the mounting bracket out of the data logger.

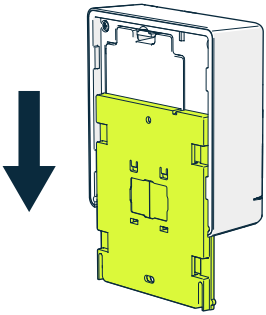

WARNING! Magnetic hazard
The mounting bracket has a strong magnet. Magnets can cause serious harm by interfering with the operation of pacemakers and other implanted medical devices. Keep the magnet away from persons with such devices, and from any other devices that are sensitive to magnetic fields. Do not separate the magnet from the mounting bracket.

3. Connect the measurement probes to the probe ports of the data logger. See Probe connection options (page 14).
4. If you are using the ANP115 Analog Input Probe, connect its input cable to the source of the analog measurement signal. If the ANP115 is the door switch model, mount the door switch in the intended location. See ANP115 Analog Input Probe User Guide (M213157EN).
5. Open the battery cover of VDL200.
6. If the batteries have been inserted at the factory, verify their type (LR6 alkaline or FR6 lithium) and remove the battery isolation tab if it is present. The tab prevents the batteries from draining during storage.

7. If the battery compartment is empty, insert 4 pcs AA size 1.5 V batteries, type LR6 (alkaline) or FR6 (lithium). Follow the markings on the battery compartment to insert the batteries in the right orientation.

> **WARNING! Explosion and combustion hazard**
> Use of incompatible batteries, inserting batteries incorrectly, and exposing batteries to high temperatures may cause batteries to explode, deflagrate, or leak flammable liquid or gas, which may lead to serious injury. Always verify the required battery type and the correct orientation inside the battery compartment. Also, make sure the temperature at the installation location is within the operating temperature range of the batteries.

> Use batteries that have a full charge and are not past their expiration date. Lithium batteries must be used with CO_2 measurement, and when the ambient temperature of the data logger's installation location is below 0 °C (+32 °F).

8. Press the power button for approximately 1 s to turn on the data logger. The data logger plays a short sound effect when turning on and off.

   The data logger starts up on battery power and detects the connected probes. The measurements from the probes are automatically assigned for display and recording.

> Batteries are intended for backup use only. Proceed to connect Power over Ethernet (PoE) as soon as possible. **The Ethernet connection is disabled until PoE is available.**

9. Check the display of the VDL200 to verify that it starts up and proceeds to the measurement view:
   a. If VDL200 requests confirmation that you have replaced the batteries, touch the **Yes** button to confirm.
   b. If there is a problem with probe connections or the type of probes connected, the startup will stop with an error message. Resolve the problem by taking the recommended actions. See Error messages (page 53).
10. Replace the battery cover.
11. Connect the Ethernet cable.
12. If the network does not provide PoE, connect a PoE power source between the network and the data logger.
13. Connect the VDL200 to your laptop using a USB-C cable and configure its settings. See Configuring settings using Insight software (page 43).

14. Attach the mounting bracket to the installation location with screws, cable ties, or the magnet.

    Note the orientation – when the data logger is installed, the probe ports should point down.

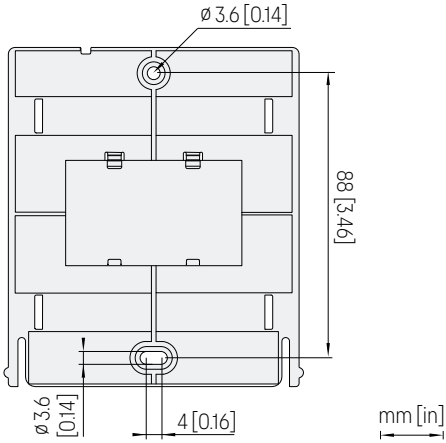

15. Slide the data logger into the mounting bracket.
16. Optional: Insert a 3×8 mm screw into the locking screw hole to prevent the data logger from being easily removed.
17. Use the included accessories to attach cabled probes to their final locations and secure the cables. See Mounting probes (page 28).
18. Log in to your monitoring system to as an administrator to verify that the VDL200 is connected and finalize device configuration. See the applicable section for your monitoring system:

    - Remote management with viewLinc Enterprise Server (page 39)
    - Remote management with Jade Smart Cloud (page 40)

> Remote management provides additional configuration options that may be relevant for you. For example, the temperature unit displayed by the data logger can be changed remotely. The default temperature unit is degrees Celsius.

19. Check the display of the VDL200 to verify there are no active errors, and that the expected measurements are displayed.

    If an ANP115 Analog Input Probe is connected, verify that the device that sends the analog output signal is powered on, and the selected parameter and unit are shown with a valid value. Note that the display uses abbreviations for parameter names.
    If the ANP115 door switch model is connected, operate the door or lid that is monitored by the switch to verify that the value on the display changes.

More information

- Abbreviations of measurement parameters (page 18)
- Error messages (page 53)

3.2 Mounting probes

For more information on probe mounting and available accessories, refer to the user guides of the probes:
- HMP60 and HMP110 Series User Guide (M211060EN)
- GMP251 and GMP80P User Guide (M211799EN)
- GMP252 User Guide (M211897EN)
- ANP115 Analog Input Probe User Guide (M213157EN)

3.2.1 Probe holder

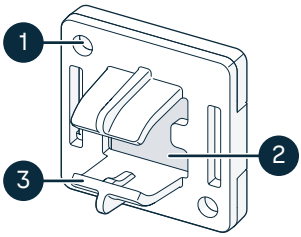

Figure 9 Probe holder ASM213382

1 Holes for attaching the holder with screws (screws not included)
2 Magnet
3 Probe attachment

The probe holder is a versatile mounting accessory for securing Ø 12 mm diameter cable mounted probes.

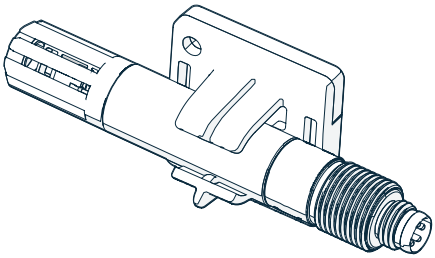

To attach the probe, simply press the body of the probe into the probe attachment.

If the probe has a plastic sleeve around the probe body (for example, HMP115 and TMP115 have it) you can center the groove next to the sleeve in the probe holder. This prevents the probe from sliding in the probe holder.

Figure 10 Example probe in the probe holder

3.2.2 CO_2 probe mounting kit

When the data logger is purchased with a CO_2 measurement probe, a CO_2 probe mounting kit (Vaisala item ASM214253SP) is included. The kit includes a versatile probe support accessory that has attachments for a Ø 25 mm probe (for example, GMP251), a Ø 12 mm probe (for example, HMP110), and the sensor tip of the TMP115 probe. It also provides sufficient separation between the probes to prevent the mild heating effect of the CO_2 probe from affecting the measurement of the other probe. For this reason, it is best not to attach the CO_2 probe to another probe using a cable tie, for example.

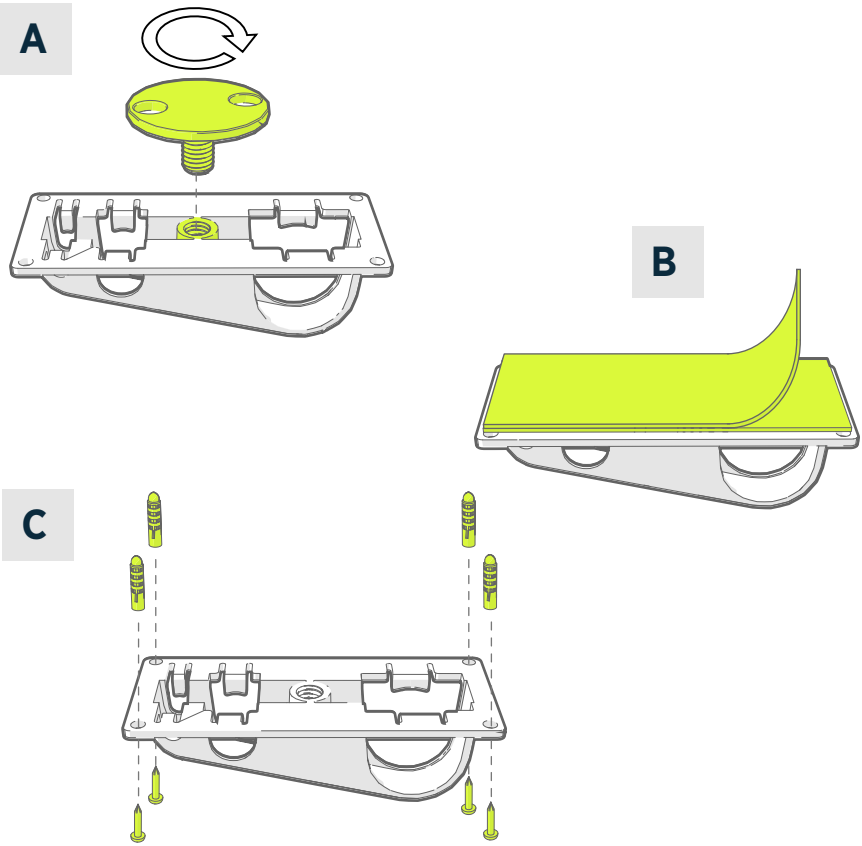

Figure 11 Probe support accessory mounting options

A Mounting through a hole using the screw-on attachment part. This method can be used to install the probes under a grid shelf, for example.
B Mounting using a reusable fastener strip. Clean the attachment surfaces using the included cleaning pad before applying the strip.
C Mounting with screws and wall plugs.

3.2.3 Mounting HMP110 probes

HMP110 is a robust stainless steel probe for humidity and temperature measurement in demanding conditions. Suitable for measurement inside chambers, fridges, and freezers in temperature range −40 ... +80 °C (−40 ... +176 °F). Must be connected to the data logger using a cable. Probe diameter 12 mm (0.47 in).

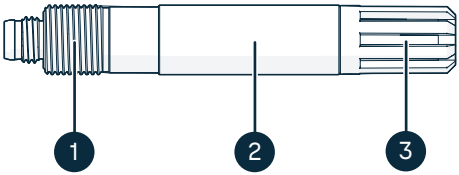

Figure 12 HMP110 probe

1 M12×1 thread for through-wall installation using mounting nuts.
2 Attach from this area using probe holder ASM213382 or cable tie.
3 Sensor protection filter. Do not attach from this area.

3.2.4 Mounting HMP63 and HMP115 probes

HMP63 and HMP115 are general purpose humidity and temperature measurement probes. They are designed to be connected directly to the data logger for minimum footprint, but can be connected using a cable as well. Operating temperature range −40 ... +60 °C (−40 ... +140 °F).

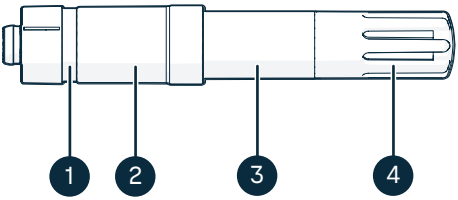

Figure 13 HMP63 and HMP115 probes

1 If using a probe holder, align it to this groove.
2 Plastic sleeve that locks the probe in place when connected to a mechanically compatible host device (for example, RFL100 data logger). Diameter 14 mm (0.55 in) at this point.
3 Attach from this area if using a cable tie. Diameter 12 mm (0.47 in) at this point.
4 Sensor protection filter. Do not attach from this area.

3.2.5 Mounting TMP115 probes

TMP115 is a wide-range temperature-only probe for measurement in extreme conditions. The probe body can be integrated with the data logger or connected using a cable. The sensor tip is permanently connected to the probe body with a thin cable. Available as 50 cm (1 ft 7.7 in) and 3 m (9.8 ft) long versions.

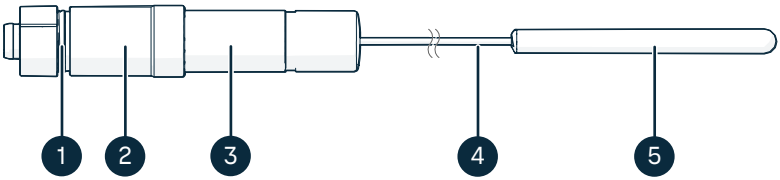

Figure 14 TMP115 probe

1 If using a probe holder, align it to this groove.
2 Plastic sleeve that locks the probe body in place when connected to a mechanically compatible host device (for example, RFL100 data logger). Diameter 14 mm (0.55 in) at this point.
3 Probe body with measurement electronics. Attach from this area if using a cable tie. Diameter 12 mm (0.47 in) at this point. Operating temperature range −40 ... +60 °C (−40 ... +140 °F).
4 Sensor cable. Do not cut or bend into a tight loop.
5 Sensor tip, diameter 4.8 mm (0.19 in). Secure using a cable tie or insert into thermal dampener block for added thermal mass. Insert into the probe support accessory when using together with a CO_2 probe. Operating temperature range −196 ... +150 °C (−320.8 ... +302 °F).

CAUTION! The operating temperature range of the sensor tip is much wider than that of the probe body. Leave the probe body outside the measured environment if possible, and avoid inserting it in environments that are outside its operating range.

When working with equipment in extremely cold temperatures, use appropriate personal protective equipment such as thermally insulated gloves and clothing. Wear protective eyewear if working with coolants such as liquid nitrogen, and observe safe handling and storage precautions.

3.2.6 Mounting GMP251 and GMP252 probes

GMP251 and GMP252 are robust carbon dioxide (CO_2) measurement probes for use in demanding applications such as life science incubators. Operating temperature range −40 ... +60 °C (−40 ... +140 °F). The CO_2 probe mounting kit (Vaisala item ASM214253SP) is recommended for mounting, but the probes can also be attached from the probe body by other methods.

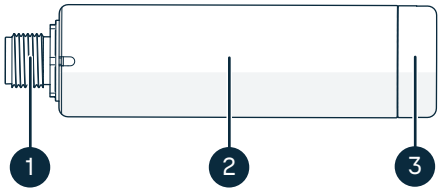

Figure 15 GMP251 probe

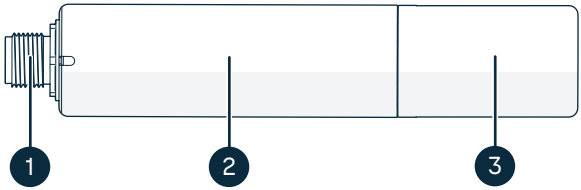

Figure 16 GMP252 probe

1 M12 5-pin male connector. Connect to VDL200 using the included M8-M12 adapter cable (item code CBL211291SP).
2 Ø 25 mm probe body.
3 Sensor protection filter. Do not attach from this area.

3.2.7 Mounting ANP115 Analog Input Probe

ANP115 converts a current, voltage, or contact input from an analog sensor into a digital output compatible with the VDL200 Data Logger. It supports a wide range of passive and active contacts. You must configure the ANP115 using Vaisala Insight software before installation.

Operating temperature range of ANP115 open wires model is −40 ... +60 °C (−40 ... +140 °F).

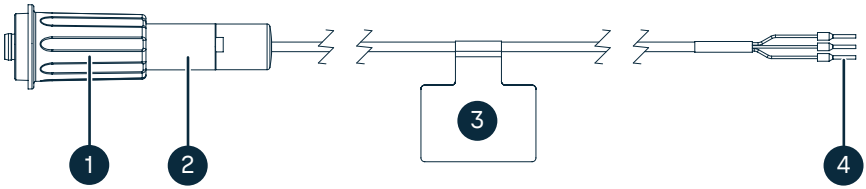

Figure 17 ANP115 open wires model

1 Probe nut for mounting directly to VDL200
2 Attach from this area if using a probe holder or cable tie. Diameter 12 mm (0.47 in) at this point.
3 Instruction label with wiring options
4 Open wires

The door switch model is preconfigured at the factory and comes with a door switch already attached. A mounting kit for the door switch is included. It contains some mounting tape and the magnet that operates the switch.

Operating temperature range of ANP115 door switch model is is −20 ... +60 °C (−4 ... +140 °F).

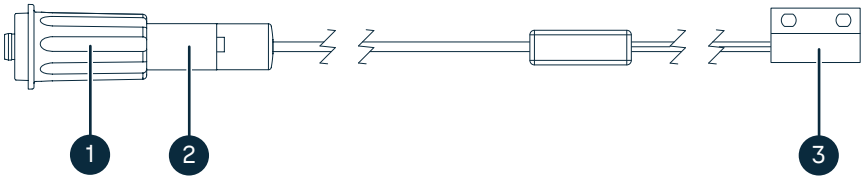

Figure 18 ANP115 door switch model

1 Probe nut for mounting directly to VDL200
2 Attach from this area if using a probe holder or cable tie. Diameter 12 mm (0.47 in) at this point.
3 Magnetic reed switch

4. Operation

4.1 Probe detection

Figure 19 Detection of a new RH + T probe in port 1

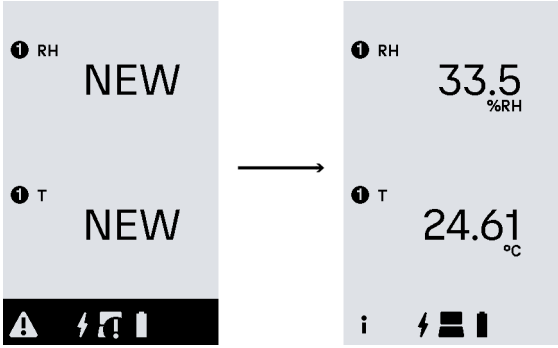

VDL200 detects and validates the connected probe(s) only at startup. It also selects the displayed and recorded measurement parameters automatically based on the type of probe. VDL200 can display and record up to 4 measurement parameters.

If the connected probes supply more than 4 parameters, VDL200 will stop with an error that indicates the probe combination is invalid. In this case you must change the connected probes so that in total the probes supply no more than 4 parameters, and restart VDL200 to attempt probe detection again.

Some other error indications may be briefly shown as the device is connecting to the network and synchronizing with a time server. These error indications will quickly disappear if everything is OK.

Table 6 Automatic selection of measurement parameters

Probe model	Selected measurement parameter(s)
HMP63, HMP110, HMP115	RH + T
HMP63T, HMP110T, HMP115T, TMP115	T
GMP251, GMP252	CO_2
ANP115	As configured on ANP115
ANP115 door switch model	Door

After the data logger completes the probe detection successfully it starts normal operation. The connected probe(s) must remain the same until the data logger is turned off again. If a probe is disconnected while the data logger remains powered on, the values of the measurement(s) will be replaced with dashes "---" until the probe is reconnected and can be successfully read again. You can successfully reconnect correctly detected probes to their original probe port without turning off the data logger.

More information

- Abbreviations of measurement parameters (page 18)

4.2 Measurement sampling rate

VDL200 uses a fixed 1 minute measurement interval. Every minute, the device performs these actions:

1. Reads measurements from the connected probe(s)
2. Stores the data into the local memory with a timestamp
3. Updates the measurement results on the display
4. If the monitoring system connection is configured and available, transmits the new measurement data (known as "real-time data") to the monitoring system

4.3 Viewing device information

1. With VDL200 in the measurement view, touch the left button.
2. If there are active errors, the **Errors** page opens. Touch the right button to proceed to the **Data logger** page.
3. The **Data logger** page shows the following identifying and status information:

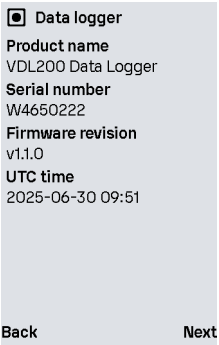

4. Touch the right button to proceed to the **Network** page.

5. The **Network** page shows the data logger's current network connection information and its MAC address.

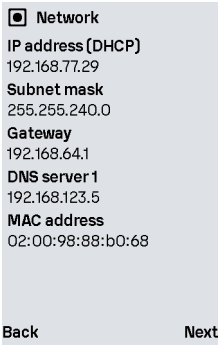

6. The data logger returns to the measurement view after 30 s.

5. Remote management

5.1 Remote management with viewLinc Enterprise Server

1. Open the viewLinc Enterprise Server user interface by double-clicking the desktop icon, or by entering the server's IP address and port in a web browser's address field.
2. Log in with a user account that has the right to manage devices.
3. When viewLinc detects new devices, **New Devices** text appears at the top of the screen. If there are any new devices:
   a. Click the **New Devices** text to open the **New Devices** window.
   b. Compare the list of new devices to your device installation plan to verify that all your devices have been found. In the **Accept** column, select each device you want to add.
   c. Select **Save** to register the selected devices with your viewLinc Enterprise Server.
4. To access management options for accepted devices:
   a. Select **Sites Manager > Hosts and Devices**.
   b. Locate the device you want to manage from the device tree, right-click the entry of the device, and select **Edit Properties**. The **Edit Device Properties** window opens.
   c. In this window you can set some information fields that viewLinc uses (for example, **Device alias**) and some actual settings that are sent to the device. Note the following settings for VDL200:
      - **Metric units enabled**: Change the setting to **No** to display degrees Fahrenheit for temperature on the device display.
      - **Device log level**: Do not adjust this setting unless instructed by Vaisala to do so. Changing the setting will increase the power consumption of the device, which will reduce the battery backup time.

5.1.1 Port identifiers in viewLinc ES

Probe port identifiers of VDL200 are not directly visible in viewLinc ES versions 5.2.1 and 5.2.2. To find out the port that supplies a measurement parameter using these viewLinc ES versions, you must determine it from the 3-digit value in the channel index column of the **Hosts and devices** panel.

- First digit is the port number:
  - 1 = port 1
  - 2 = port 1B
  - 3 = port 2
  - 4 = port 2B
- Second digit is zero.
- Third digit is a channel number. Measurement parameters from the probe are numbered sequentially, starting at 1.

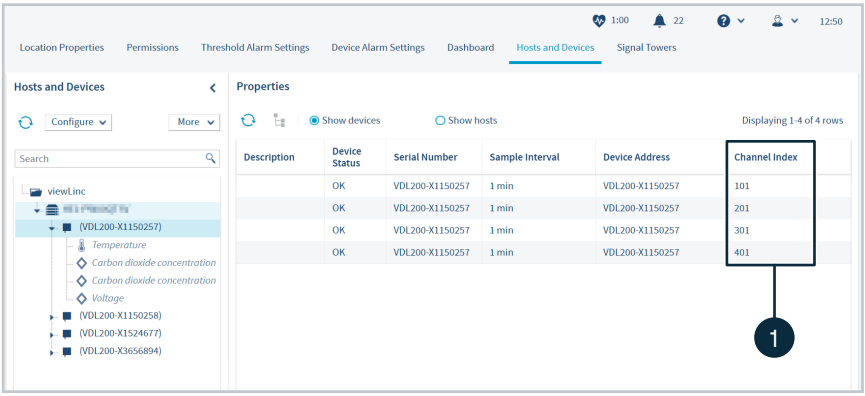

Figure 20 Hosts and Devices tab in viewLinc ES version 5.2.1

1 Channel index column

Table 7 Example channel index mapping

Probe	Connected port in VDL200	Channel index value in viewLinc ES
TMP115	1	101
GMP251	1B	201
GMP251	2	301
ANP115	2B	401

5.2 Remote management with Jade Smart Cloud

1. Log in to your Jade Smart Cloud account at jade.vaisala.com.
2. Select the **Devices** menu and locate the device you want to manage on the list.
3. Select the device from the list. The **Overview** tab opens, showing the communication status of the device.
4. Select the **Device properties** tab.

5. Check the **Units on display** value. This value controls the unit system that is used on the local display. To change the setting:
    a. Select **Edit**.
    b. Select the new setting from the drop-down menu.
    c. Select the check mark to submit the change.

6. Using VDL200 with Vaisala Insight Software

6.1 Vaisala Insight PC software

Vaisala Insight PC software is a configuration and calibration software for Vaisala devices. Insight is available for the Windows operating system (64-bit only). For a full list of supported operating system versions, see vaisala.com/insight.

With Vaisala Insight PC software, you can:

- Configure VDL200 settings:
  - Network settings
  - Backup battery type
  - Monitoring system address (configurable for viewLinc Enterprise Server only)
  - Time server addresses
- View and download measurement data files that are currently stored in the local memory of VDL200
- Update VDL200 firmware
- Configure and calibrate VDL200-compatible measurement probes

Insight software is the only way to configure VDL200 settings during installation.

More information

- Configuring settings using Insight software (page 43)
- Viewing and downloading VDL200 data files using Insight software (page 45)
- Updating firmware using Insight (page 50)

6.2 Connecting to Insight software

Required tools:
- Computer with Microsoft Windows® operating system (64-bit version) and Insight PC software (version 1.3.0 or later) installed, and a free USB port
- USB-C cable for connecting VDL200 to a computer

To configure and calibrate the measurement probes, connect them separately to Insight. For more information, refer to probe user documentation.

1. If VDL200 is turned off, turn it on.

2. Open the Insight software on your computer.
3. Connect a USB cable between your computer and the service port of VDL200.
4. Wait for the Insight software to detect the data logger.

6.3 Configuring settings using Insight software

Required tools:
- Computer with Microsoft Windows® operating system (64-bit version) and Insight PC software (version 1.3.0 or later) installed, and a free USB port
- USB-C cable for connecting VDL200 to a computer

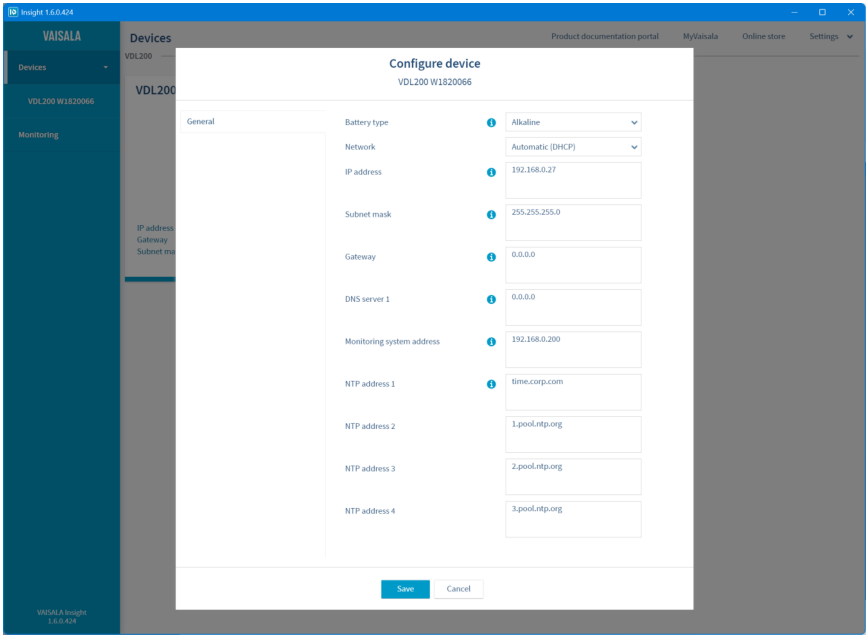

Figure 21 Configuring VDL200 settings with Insight

1. If VDL200 is turned off, turn it on.
2. Open the Insight software on your computer.
3. Connect a USB cable between your computer and the service port of VDL200.
4. Wait for the Insight software to detect the data logger.

5. In Insight, select ⚙ > **Configure device**.
6. Select the **Battery type** so that it matches the batteries currently inserted in the device.

   The battery type setting is important to optimize the accuracy of the battery indicator and to allow the monitoring system to reliably send the low battery warning.
7. Configure the **Network** setting to select addressing type:
   - To use automatic IP address configuration using DHCP, select **Automatic (DHCP)**.
   - To configure a static IP address, select **Static IP**.

   Your network administrator may request the **MAC address** of the device to allow it to the network. It is marked on the device itself, and you can also press the left button on the device to view it on the device information screen.

8. If you selected Static IP configuration, fill the following fields as instructed by your network administrator:
   - **IP address**
   - **Subnet mask**
   - **Gateway**
   - **DNS server 1**
9. Only when used with viewLinc Enterprise Server: Configure the hostname, fully qualified domain name, or IP address of your viewLinc ES system in the **Monitoring system address** field.

   VDL200 communicates with viewLinc ES on TCP port 8883 by default. You do not have to specify the default port in the address. However, if the port has been changed on the viewLinc side, you must add a colon ":" and the correct TCP port number to the address. For example: **viewlinc.examplecompany.com:1234**

10. If you have an NTP server (time server) in your local network, overwrite **NTP address 1** with its hostname, fully qualified domain name, or IP address.
11. Select **Save** when done.
12. If you changed the **Network** setting, turn VDL200 off and on again using the power button to make sure the network settings are applied properly.

More information

- Backup batteries (page 20)

6.4 Viewing and downloading VDL200 data files using Insight software

Data files currently stored in the local memory of VDL200 can be viewed, renamed, deleted, and exported as CSV files on the **Data files** tab of Insight PC software. In normal operation, there is usually no reason to view or export these files locally as the data is stored in the monitoring system.

Required tools:
- Computer with Microsoft Windows® operating system (64-bit version) and Insight PC software (version 1.4.0 or later) installed, and a free USB port
- USB-C cable for connecting VDL200 to a computer

1. If VDL200 is turned off, turn it on.
2. Open the Insight software on your computer.
3. Connect a USB cable between your computer and the service port of VDL200.
4. Wait for the Insight software to detect the data logger.

5. Select the device from the menu to open the data file view.

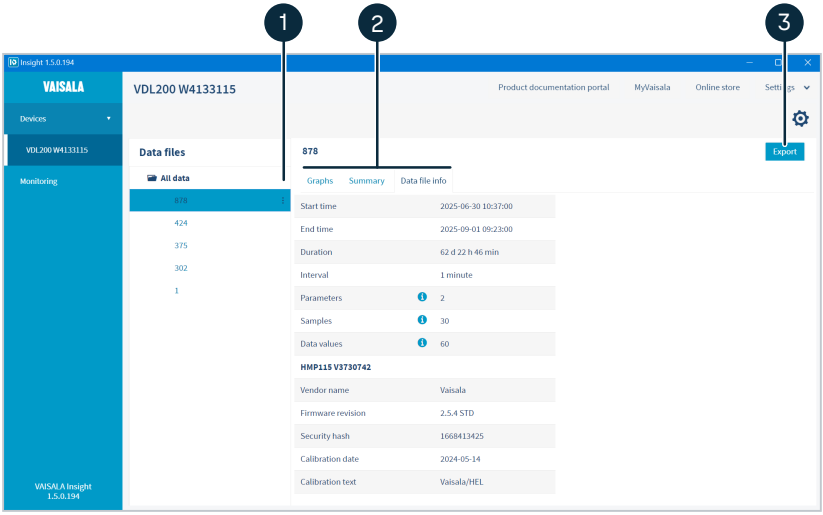

1 Select the **All data** folder to open the list of data files.
By default, data files are named with a running number that is the sample ID of the first included data value in the file. You can delete and rename data files. Select the three dots next to the data file name to open the edit menu.

2
- Logged data is displayed in graphical and numerical format on the **Graphs** and **Summary** tabs.
- **Data file info** contains information about the devices used for logging, as well as logging duration and interval, and the number of parameters, samples, and data values.

3 Select **Export** to save the logged data in CSV format.
The data can imported to a spreadsheet program such as Microsoft Excel using the tab-separated values (TSV) import option. The data cannot be manually loaded to any of the monitoring systems supported by VDL200: it must be stored as a separate file.

More information

- Files and folders in the USB file system (page 22)

7. Maintenance

7.1 Cleaning

- Instrument air
- Lint-free cloth
- Isopropyl alcohol (70 %)

Do not spray anything directly on the VDL200 or the measurement probes.
Do not use acetone as the cleaning agent as it may damage the plastic parts.
Do not use abrasive sponges or scrape the surface of the devices.
Do not immerse the devices in liquid.

1. Blow instrument air on the VDL200 to remove any dust and loose debris.

   Do not blow directly into the filters of the measurement probes as that may damage the filter or the sensors underneath.
2. Moisten some lint-free cloth with isopropyl alcohol (70 %).
3. Wipe the data logger housing.
4. Wipe the Ethernet cable and any probe connection cables.

   To avoid pulling on the cables, hold the cable while wiping along the length of it.
5. To clean the measurement probes:
   a. Wipe the probe body and the probe nut that is holding it (if not connected by a cable).
   b. If the probe has a detachable filter, check it for contamination, and replace if necessary.

      Do not wipe the filter as that may block its pores and/or deposit residue on the filter. Keeping the filter clean is especially important for accurate humidity measurement. If the filter becomes contaminated, it is very likely to retain some moisture.

7.2 Replacing batteries

- 4 pcs of new AA size 1.5 V batteries: alkaline (type LR6) or lithium (type FR6)

WARNING! Explosion and combustion hazard
Use of incompatible batteries, inserting batteries incorrectly, and exposing batteries to high temperatures may cause batteries to explode, deflagrate, or leak flammable liquid or gas, which may lead to serious injury. Always verify the required battery type and the correct orientation inside the battery compartment. Also, make sure the temperature at the installation location is within the operating temperature range of the batteries.

VDL200 has a configurable battery type setting that optimizes the operation of the battery charge indicator. Adjust this setting according to the battery type (alkaline or lithium) when you take the device into use, and change it if the you change the battery type.

Always insert batteries that have a full charge and are not past their expiration date. Using partially discharged or expired batteries may cause the battery level indication and alerting to work unreliably.

1. Check the power status from the display of the data logger:
   - If PoE power is connected (icon is shown), you can replace the batteries without turning off the data logger.
   - If the data logger is operating on battery power (icon is shown), you must turn off the data logger from the power switch before replacing the batteries.
   - If the data logger is already turned off, you can replace the batteries at any time.
2. Slide the mounting bracket out of the VDL200.
3. Open the battery cover of VDL200.
4. If the data logger is operating on battery power, push the power button to turn it off.
5. Remove the old batteries from the data logger.
6. Check the battery orientation markings on the data logger and insert the new batteries in the correct orientation.
7. If the data logger is turned off, push the power button to turn it on.
8. At startup, VDL200 detects that the battery voltage has changed, and prompts you to confirm that you have replaced the batteries. Touch the **Yes** button to confirm.
9. Verify that the battery icon indicates full batteries .
10. Close the battery cover of VDL200.
11. Slide VDL200 into the mounting bracket.

More information

- Backup batteries (page 20)

7.3 Replacing and swapping probes

VDL200 detects and validates the connected probe(s) only at startup. Because of this, you must restart the data logger to take any probe changes into use. Probe cables can be disconnected and reconnected on the fly, as long as the probes and their connection ports remain the same.

If you change the probes in a way that changes the parameters recorded by the data logger, log in to your monitoring system and check if you need to make changes to way measurement data is linked to locations.

1. Slide the mounting bracket out of the VDL200.
2. Open the battery cover of VDL200.
3. Push the power button to turn VDL200 off.
4. Disconnect and connect probes as needed.
5. Push the power button to turn VDL200 on.
6. Close the battery cover of VDL200.
7. Check the display to verify that the connected probes are successfully detected.
8. Slide VDL200 into the mounting bracket.

7.4 Calibration and adjustment

Calibration means comparing the measurement output of the device to a known reference, such as a known environment in a calibration chamber or the output of a reference instrument. Correcting the reading of the device so that it measures accurately is referred to as **adjustment**.

Sensors and measurement electronics are fully contained in the replaceable probes. This allows the probes to be calibrated, adjusted, and replaced as needed. Probe serial number and calibration information (calibration date and information text string) are stored in the probe. If a probe is replaced or the calibration information in the probe is updated, VDL200 automatically sends the new information to the monitoring system.

The calibration frequency depends on the application and your compliance requirements. Vaisala recommends having the probes calibrated and adjusted once a year by Vaisala Calibration and Repair Services. See vaisala.com/calibration.

For detailed calibration and adjustment instructions, see the following documents:

- HMP60 and HMP110 Series User Guide (M211060EN)
- GMP251 and GMP80P User Guide (M211799EN)
- GMP252 User Guide (M211897EN)

7.5 VDL200 firmware update

You can update the firmware of the VDL200 data logger using file transfer or using the Insight PC software. Starting with firmware version 1.2.0, VDL200 also supports remote firmware update from Jade Smart Cloud. The remote update feature can only be used by Vaisala.

- Updating VDL200 firmware does not remove data that is currently in the local memory of the device.
- Updating the firmware does not affect the data logger's status in the monitoring system. If the device was accepted in the system before the update, it remains accepted.
- For information on firmware version changes and compatibility, see VDL200 Firmware Release Notes (M213146EN).

There is a short break in data logging and connectivity during the actual update. After a successful update the data logger will automatically resume data logging and communication with the monitoring system.

7.5.1 Updating firmware using Insight

Required:
- Computer with Microsoft Windows® operating system (64-bit version) and Insight PC software (version 1.3.0 or later) installed, and a free USB port
- USB-C cable for connecting VDL200 to a computer
- Firmware update package (ZIP file) for VDL200

1. Check that the VDL200 to be updated is turned on and has backup batteries that are not empty.

   You do not need to connect a network cable or any probes to perform the firmware update.
2. Check the current firmware version of the VDL200. See Viewing device information (page 37).
3. Make sure you have the latest VDL200 firmware update package available on your computer.

   Do not unzip the package, as Insight only accepts the file in ZIP format.
4. Open the Insight software on your computer.
5. Connect a USB cable between your computer and the service port of VDL200.
6. Wait for the Insight software to detect the data logger.

7. In the **Devices** menu of Insight, select the VDL200 settings icon and the **Update firmware** option.

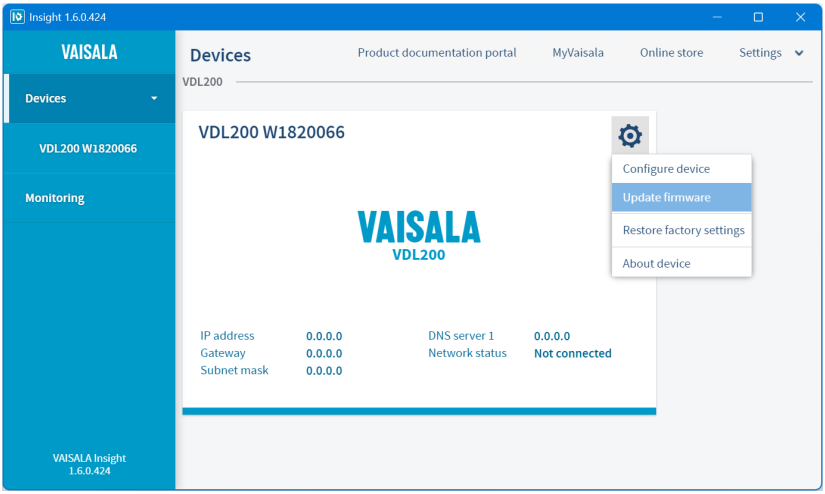

8. Select **Browse...** to locate the ZIP file. Select the file and select **Open**.
9. Select **Update**.
10. Wait for the firmware transfer to complete and VDL200 to begin updating.

    If the file is valid, VDL200 begins the update automatically. Do not unplug the cable or turn off the VDL200 during the update.
    The update takes approximately 1 minute. During the update the status LED flashes green, and the display shows the text **Updating firmware, do not turn off power**.
11. When the update is done, VDL200 restarts and shows the result of the update with a message on the display:

    - **Firmware updated to version <new version>.**: The update was successful and the new firmware is in use.
    - **Firmware updated failed. Please try again.**: The update was unsuccessful for some reason.

> VDL200 may incorrectly report a failed update in certain situations, for example when attempting to update with a package that has the same firmware version as the current one. Always check the current firmware version after performing the update. If the version has not been updated, repeating the update process may help.

7.5.2 Updating firmware using USB file transfer

Required:
- Computer with a free USB port and an operating system that supports the Media Transfer Protocol (MTP). For example, Windows® 7 and newer.
- USB-C cable for connecting VDL200 to a computer
- Firmware update package (ZIP file) for VDL200

1. Check that the VDL200 to be updated is turned on and has backup batteries that are not empty.

   It is not necessary to connect a network cable or any probes to perform the firmware update.
2. Check the current firmware version of the VDL200. See Viewing device information (page 37).
3. Unzip the firmware update package it into a temporary directory on your computer.
4. Connect the USB-C connection cable between your computer and the data logger.

   After the computer detects the device and installs the appropriate driver, it is available for file transfer.
5. Copy the firmware update file into the `\Device\Update` folder on the VDL200. For example, if your computer has a Windows operating system, you can simply drag the file into the correct folder (drag and drop) or use the copy and paste functions.

   If the file is valid, VDL200 begins the update automatically. Do not unplug the cable or turn off the VDL200 during the update.
   The update takes approximately 1 minute. During the update the status LED flashes green, and the display shows the text **Updating firmware, do not turn off power**.
6. When the update is done, VDL200 restarts and shows the result of the update with a message on the display:

   - **Firmware updated to version <new version>.**: The update was successful and the new firmware is in use.
   - **Firmware updated failed. Please try again.**: The update was unsuccessful for some reason.

   VDL200 may incorrectly report a failed update in certain situations, for example when attempting to update with a package that has the same firmware version as the current one. Always check the current firmware version after performing the update. If the version has not been updated, repeating the update process may help.

More information

- Files and folders in the USB file system (page 22)

8. Troubleshooting

8.1 Problem situations

If you have a problem with using VDL200, start by checking the following table. To resolve possible issues using a troubleshooting procedure, see Basic troubleshooting procedure (page 56).

If you are unable to resolve the problem, contact Vaisala technical support.

Table 8 Troubleshooting table

Problem	Possible cause	Solution
The status LED is red, the error icon is shown over the left button, and one or more errors are active.	Various causes.	Check the meaning of the error(s) and proceed accordingly. See Error messages (page 53).
Service port connection to a computer is not working.	Issue with the computer's USB controller, its driver software, or the physical port.	1. Connect the USB-C cable to a different USB port on the computer. 2. Restart your computer and try again. 3. Use a different computer.
Display shows dashes "- - -" instead of a CO_2 reading at startup.	Startup delay of the CO_2 probe.	This is normal. Wait for the CO_2 reading to appear.
Backup battery level is low even though you have replaced the batteries.	You did not respond to the battery replacement confirmation prompt, so VDL200 continues to show the low battery level.	Follow the battery replacement procedure but without actually replacing the batteries with a new set. Make sure to confirm the battery replacement prompt when it is shown on the display. See Replacing batteries (page 47).

8.2 Error messages

When VDL200 has one or more error messages to show, it flashes the status LED with red, and displays the ⚠ icon over the left button. Touching the button opens the **Errors** screen where you can view the error messages.

Some errors are associated with status icons that are shown on the home screen.

Table 9 VDL200 error messages

Error message and icon(s)	Description	Recommended action
No probes detected. Connect probes and restart.	No compatible measurement probes were detected when VDL200 was started up. This message is shown on the home screen instead of the **Errors** screen.	Connect measurement probes and restart VDL200.
Invalid probe combination connected. Maximum number of loggable parameters is 4.	Currently connected probe combination supplies more than 4 loggable parameters. HMP63, HMP110, and HMP115 probes supply 2 parameters (RH+T), all other compatible probes supply 1 parameter.	1. Change the connected probe combination so that in total the probes supply no more than 4 parameters. 2. Restart VDL200.
Power over Ethernet not available.	PoE power is not available. VDL200 is operating on battery power or power from the temporary service port connection. This error means VDL200 cannot operate its network connection, which causes additional errors to be active.	1. Verify that the Ethernet cable is connected. 2. Enable PoE from the network switch or connect a PoE power source between the network and VDL200.
Network connection not available.	VDL200 does not have a network connection.	1. Verify that the Ethernet cable is connected. 2. Connect VDL200 to Insight software and verify the network settings. 3. Turn VDL200 off and on again using the power button to make sure the latest network settings are applied properly. 4. Depending on how the network is configured, you may need to supply your IT support with the **MAC address** of the VDL200 so that it can be allowed to the network.

Error message and icon(s)	Description	Recommended action
Monitoring system connection problem.	If VDL200 is used with a cloud-based monitoring system, this error is likely caused by lack of Internet connectivity.	There may be a connectivity problem between the monitoring system and VDL200. Request help from your local IT support to resolve it.
	If VDL200 is used with viewLinc Enterprise Server, the address of the monitoring system must be manually configured. The address may be missing or incorrect.	Connect VDL200 to Insight software and verify that the address of the monitoring system has been configured correctly.
Backup batteries empty.	The battery level is insufficient for operation.	Replace the batteries. Make sure to confirm the battery replacement prompt when it is shown on the display. See Replacing batteries (page 47).
Backup battery level low.	The battery level is low but currently sufficient for operation.	
Backup batteries not installed.	Backup batteries are not installed.	Insert new batteries.
	Backup batteries are installed in incorrect orientation.	Verify the correct orientation of the batteries from the markings on the battery compartment, and correct the orientation.
	The battery isolation tab that prevents battery drain during storage has not been removed.	Remove the battery isolation tab.
System time not available.	The real-time clock of the VDL200 does not have system time set. This error means the VDL200 cannot store and send measurement data.	Resolve the time synchronization error.

Error message and icon(s)	Description	Recommended action
Time synchronization problem.	VDL200 is currently unable to synchronize its system time with any of the network time protocol (NTP) servers.	1. Verify that VDL200 has a network connection and PoE power connected. 2. Connect the VDL200 to Insight software and verify that the addresses of the NTP servers have been configured correctly. 3. A network firewall may be blocking UDP port 123 that is needed for the NTP protocol to function.

More information

- Basic troubleshooting procedure (page 56)

8.3 Basic troubleshooting procedure

If you have already installed the VDL200 but the data logger is flashing a red status LED and displaying error messages, or not connecting to the monitoring system as expected, perform this procedure to resolve the most common causes of problems.

If you need more help, contact Vaisala technical support at helpdesk@vaisala.com.

1. Check the battery icon on the home screen and take corrective action if necessary.
   - means the backup batteries have not been inserted, they are inserted incorrectly, or the battery isolation tab that prevents battery drain during storage has not been removed.
   - means the batteries are empty.
   - means the battery charge is low.
2. Verify that the VDL200 is connected to the network with a network cable, and that Power over Ethernet (PoE) is supplied by the connection.

   Check the power icon on the home screen:
   - means PoE is connected.
   - means PoE is not connected. This causes VDL200 to disable network interface to conserve battery power. It also activates many separate error messages as VDL200 cannot communicate with the monitoring system or the time servers. Note that if the **System time not available** error is active, VDL200 cannot record measurement data.
3. If necessary, enable PoE from the network switch or connect a PoE power source between the network and the data logger.

4. After you have verified that PoE power is connected, check that the device has an IP address.
   a. Touch the left button to open the device information screens.
   b. If there are active errors, the **Errors** screen opens first. In that case, touch the right button to switch to the **Data logger** screen.
   c. Locate the **IP address** and verify that it is valid for your network.

      If the VDL200 has been configured to acquire the IP address using DHCP and the IP address reads 0.0.0.0 on the **Data logger** screen, that means the VDL200 has not managed to join the network.
5. If there is a problem with network connectivity, turn VDL200 off and on again using the power button and check again.
6. If necessary, contact your local IT support to resolve the connection issue.

   Depending on how the network is configured, you may need to supply your IT support with the **MAC address** of the VDL200 so that it can be allowed to the network. The MAC address is shown on the **Data logger** screen.
7. Check if there are still active errors, and continue to the next step if there are.
8. If the error **Monitoring system connection problem** is active:
   a. The address of the target monitoring system may be configured incorrect or not at all. Use the Insight software to check **Monitoring system address** configuration. See Configuring settings using Insight software (page 43).

      TCP port 8883 is the default port for this connection, and it does not have to be included in the address configuration. If the monitoring system has been configured to use a different port for connecting to VDL200 devices, add it to the **Monitoring system address** by adding a colon ":" and the port number.
   b. If address is correct, the cause of the error is likely there is a network routing problem or a firewall is blocking the network port for this connection. Contact your local IT support to resolve the issue.

9. If **System time not available** or **Time synchronization problem** errors are active:

   Similarly to the monitoring system, the VDL200 must be configured with the addresses of the time servers it uses. The default time servers are configured by default, but VDL200 must have access to the Internet to use those. You may have your own time server in the local network that must be used.

   a. Use Insight software to check the **NTP address** configuration. See Configuring settings using Insight software (page 43).

      By default, there are four numbered *`pool.ntp.org`* servers listed (for example, *`0.pool.ntp.org`*).
      If you have replaced a default server with a local time server, make sure its address is written correctly. If the address of the local time server is a hostname (for example, *`myntpserver`*), make sure it is registered with the DNS server the VDL200 is using. Instead of the hostname, you can also try to provide a fully qualified domain name (for example *`myntpserver.corporate.net`*) or the actual IP address of the server.

   b. If the time server configuration is correct, the cause of the error may be a network routing problem.

      The most typical case is an isolated network with no access to Internet, which means the default time servers are not reachable. In an isolated network, you **must** provide a local NTP server or VDL200 cannot be used.

   c. It is also possible that a firewall may be blocking UDP port 123 that is needed for the NTP protocol to function.

      Typically this happens on the edge of the network. Both inbound and outbound connections must be allowed. Contact your local IT support to resolve the issue.
      If you have set up a local NTP server, make sure the firewall on the server itself is not blocking the NTP connections.

   d. Depending on your geographical location, the default time servers may be unreachable even if the access point has Internet access and the firewalls of your local network are not blocking the NTP connections.

      In that case, you should reconfigure the time server list to use country-specific servers. For example, you could use *`0.ch.pool.ntp.org`* if the access point is installed in Switzerland. For lists of available server addresses, see www.ntppool.org.

More information

- Status icons (page 20)
- Error messages (page 53)

8.4 Downloading device diagnostics

Required:
- Computer with a free USB port and an operating system that supports the Media Transfer Protocol (MTP). For example, Windows® 7 and newer.
- USB-C cable for connecting VDL200 to a computer

VDL200 collects some diagnostic information as part of its normal operation. The diagnostic information is stored in a data file that can be retrieved through the service port connection. Vaisala support may request that you send the diagnostic file to help diagnose any issues you may have with the data logger. The data in the file is intended for use only by Vaisala.

1. If the data logger is turned off, turn it on.
2. Connect the USB-C connection cable between your computer and the data logger.

   After the computer detects the device and installs the appropriate driver, it is available for file transfer.
3. Open a file manager and copy the file `\Device\Diagnostics\device_diagnostics.bin` from the data logger to your computer.

   For example, if your computer has a Windows operating system, you can simply drag the file into the correct folder (drag and drop) or use the copy and paste functions.

More information

- Files and folders in the USB file system (page 22)

8.5 Product returns

If the product is faulty, these steps help to speed up the return process and avoid extra costs.

1. Read the warranty information.
2. Contact Vaisala technical support and request a Return Material Authorization (RMA) and shipping instructions.

   Always request the RMA before returning any faulty material.
   Provide the failure report as requested.

3. If you are returning the VDL200 data logger, remove the backup batteries from the device before shipping. This is especially important if lithium batteries are used.
4. Make sure any returned material is safe to handle and does not require special handling or cleaning precautions. Do not return any material that may be contaminated by substances or chemicals that are harmful to humans.

9. Technical data

9.1 VDL200 technical specification

Table 10 VDL200-compatible probes

Measurement or function	Probe models
Humidity and temperature (RH+T)	HMP63, HMP110, HMP115
Temperature (T)	HMP63T, HMP110T, HMP115T, TMP115
Carbon dioxide (CO_2)	GMP251, GMP252
Analog input and door switch	ANP115

Table 11 VDL200-compatible systems and software

System or software	Version	Connection
viewLinc Enterprise Server	Version 5.2.1 or above	TCP port 8883 (default)
Jade Smart Cloud	Any	TCP port 443
Insight PC software	Version 1.3.0 or above	USB-C
Time server [1)]	Any	UDP port 123

1) Connection to Network Time Protocol (NTP) server is required for operation.

Table 12 VDL200 inputs and outputs

Property	Description/value
Ethernet connector	8P8C (RJ-45)
Probe connector (2 pcs)	4-pin female M8 connector
Service port	USB-C
Ethernet interface	
Supported standards	10BASE-T, 100BASE-TX
IPv4 address assignment	DHCP (automatic), static IP

Table 13 VDL200 operating environment

Property	Description/Value
Operating environment	Indoor use

Property	Description/Value
Use in wet location	No
Storage temperature	−30 ... +60 °C (−22 ... +140 °F)
Operating temperature	−20 ... +60 °C (−4 ... +140 °F)
Operating humidity	0–100 %RH, non-condensing
IP rating	IP30: Protected against solid foreign objects of 2.5 mm Ø and greater.
Do not place the VDL200 unit in an environment that can exceed this specification, for example inside a climate chamber. Insert only the measurement probe(s) in the chamber and leave the VDL200 unit outside it.	

Table 14 VDL200 powering

Property	Description/Value
Powering options	Power over Ethernet (PoE) Battery backup [1)] USB-C for temporary service use
PoE supply voltage	48 V DC
USB-C supply voltage	5 V DC
Power consumption	Max. 2 W
Battery type	AA size, 1.5 V, LR6 (alkaline) or FR6 (lithium)
Number of batteries	4

1) Network connection is not available when VDL200 is operating on battery power.

Table 15 VDL200 operating time on battery power

Probe combination	Battery type	Estimated operating time [1)]	
		1 probe	4 probes
Any compatible RH and T probe	Alkaline	14 d	13 d
ANP115 with door switch	Alkaline	13 d	9 d
Any compatible CO_2 probe	Lithium	1 d	10 h [2)]
ANP115 powering a PDT101 differential pressure sensor	Lithium	2 d	16 h

Probe combination	Battery type	Estimated operating time [1]	
		1 probe	4 probes
ANP115 with maximum sensor powering (15 V 24 mA)	Lithium	1 d	9 h [2]

1) *At +25 °C (+77 °F) temperature with full batteries.*
2) *Use of PoE power supply with uninterruptible power supply (UPS) is recommended to extend the backup time.*

Table 16 VDL200 data logging and user interface specifications

Property	Specification
Number of samples [1]	50 000
Sampling rate	1 min
Minimum recording span	30 days
Memory type	Flash
Memory mode	Ring buffer (FIFO)
Display	3.16″ reflective matrix display
Display languages	English
Interaction	2 capacitive buttons

1) *1 sample can include up to 4 measurement values.*

Table 17 VDL200 compliance

Property	Description/Value
EU directives and regulations	EMC Directive (2014/30/EU) RoHS Directive (2011/65/EU) as amended by 2015/863
Electromagnetic compatibility (EMC)	IEC/EN 61326-1, industrial environment EN 61000-6-2 EN 61000-6-4 FCC part 15 B, Class B CAN ICES-3(B)/NMB-3(B)
Compliance marks	CE, China RoHS, KC, RCM

Table 18 VDL200 mechanical specifications

Property	Specification
Housing color	RAL 9003 (white)
Mounting methods	Screws, cable ties, or magnet
Dimensions without probes (H × W × D)	120 × 100 × 38 mm (4.72 × 3.94 × 1.50 in)
Display size (H × W)	68 × 42 mm (2.68 × 1.65 in)
Weight without batteries and probes	260 g (9.17 oz)
Materials	
Housing	PBT plastic
Display window	PMMA (acrylic)
Mounting bracket	PC/ABS plastic blend

9.2 Accessories and spare parts

Table 19 VDL200 accessories

Description	Item code
Mounting kit with screws (4 pcs), wall plugs (4 pcs), and cable ties (2 pcs)	245679SP
Splitter cable M8-4M – 2×M8-4F	284332
PoE power source, Europe	CMS-ACC-POE-EUR
PoE power source, UK	CMS-ACC-POE-UK
PoE power source, US	CMS-ACC-POE-US
USB-A – USB-C cable for service port connection, 2 m	273956
Probe cable for VDL200, M8-4M – M8-4F, 3 m	CBL211293-3MSP
Probe cable for VDL200, M8-4M – M8-4F, 10 m	CBL211293-10MSP
Flat probe cable for VDL200, M8-4M – M8-4F, 3 m	CBL211292SP
Flat probe cable for VDL200, M8-4M – M12-5F, 3 m	CBL211291SP
High-temperature cable, M12-5M – M12-5F, 1 m [1) 2)]	271038SP

Description	Item code
High-temperature cable, M8-4M – M8-4F, 1 m [2]	271039SP

1) *For CO_2 probe. Connect to VDL200 using M8-M12 adapter cable CBL211291SP.*
2) *High-temperature cables tolerate −20 ... +180 °C (−4 ... +356 °F) temperatures and can remain inside an incubator during a typical heat sterilization cycle. To minimize heat conduction, leave half of the cable in ambient temperature when installed.*

Table 20 Selected probe-specific accessories

Description [1]	Compatible probes	Item code
Thermal dampener block for 3/16″ probes (4.8 mm)	TMP115	236310SP
Probe holder (5 pcs) for Ø 12 mm probes	ANP115, HMP63/T, HMP110/T, HMP115/T, TMP115	ASM213382SP
CO_2 probe mounting kit	GMP251, GMP252	ASM214253SP
Sintered PTFE filter	HMP63/T, HMP115/T	219452SP

1) *See probe datasheets in docs.vaisala.com for more accessories.*

Table 21 VDL200 spare parts

Description	Item code
VDL200 mounting bracket with magnet	DRW257202SP
VDL200 probe nut (5 pcs)	DRW257207SP
VDL200 battery cover (5 pcs)	DRW257201SP

Table 22 VDL200 probes

Probe	Measurement	Configuration code
HMP63	RH+T	R00A6A1A0
HMP63T	T	R0A61A0
HMP110	RH+T	Z00B0C1A0
HMP110T	T	Z0B01A0
HMP115 with 3-point RH calibration at ambient T	RH+T	A1B1A
HMP115 with 3-point RH and 3-point T calibration	RH+T	B1B1A
HMP115T with 3-point T calibration	T	C1B1A
HMP115T with 1-point T calibration	T	D1B1A

Probe	Measurement	Configuration code
TMP115 with 0.5 m probe cable	T	1A0N
TMP115 with 3 m probe cable	T	2A0N
TMP115 with 3 m probe cable and 6-point T calibration	T	3A0N
GMP251	CO_2	B1B0C0N1
GMP252	CO_2	51A0B0N1
ANP115	Analog signal input	A0N0N
ANP115 with field connector	Analog signal input	B0N0N
ANP115 with door switch	Contact input	C0N0N

9.3 Dimension drawings

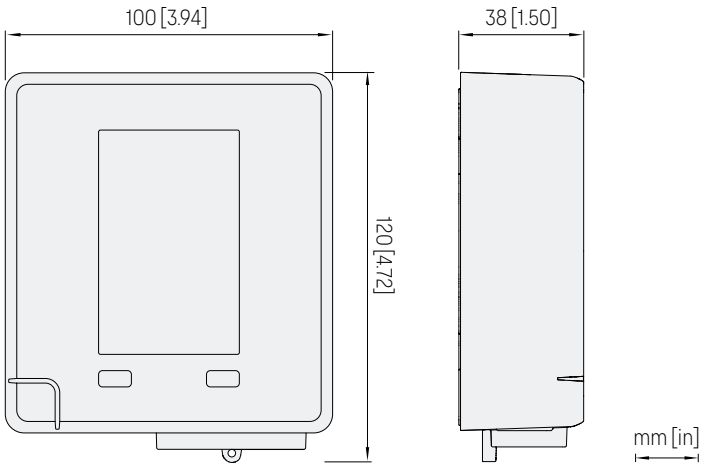

Figure 22 VDL200 dimensions

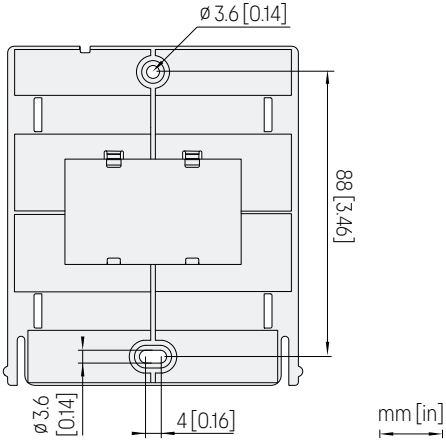

Figure 23 VDL200 mounting bracket hole dimensions

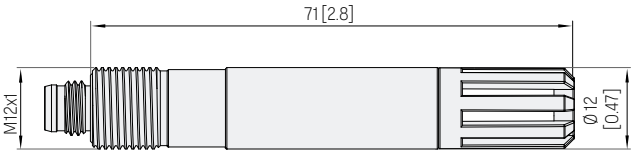

Figure 24 HMP110 and HMP110T probe dimensions

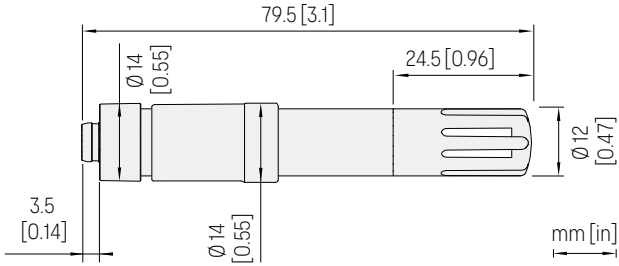

Figure 25 HMP63, HMP63T, HMP115, and HMP115T probe dimensions

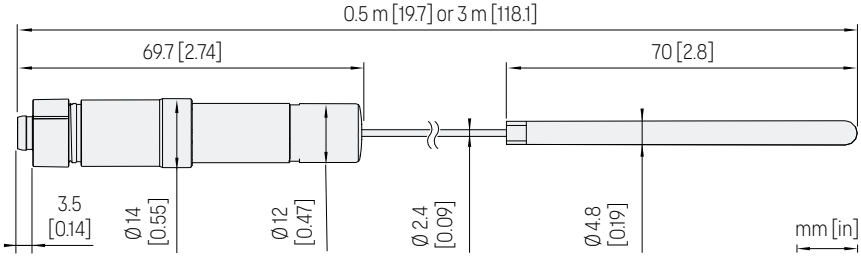

Figure 26 TMP115 probe dimensions

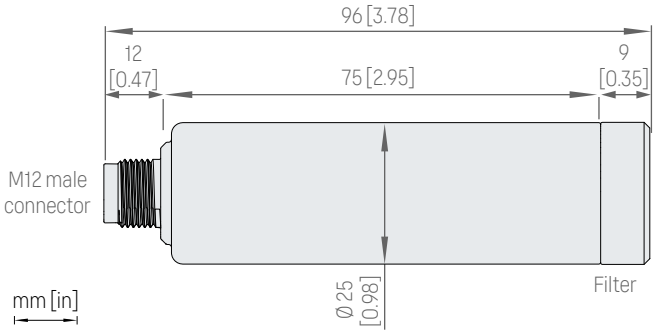

Figure 27 GMP251 probe dimensions

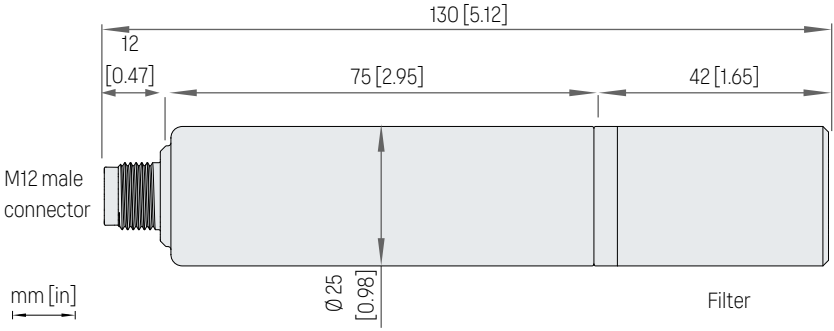

Figure 28 GMP252 probe dimensions

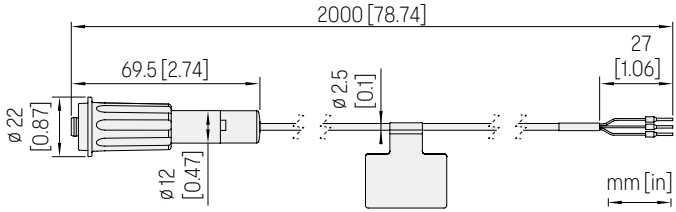

Figure 29 ANP115 probe dimensions

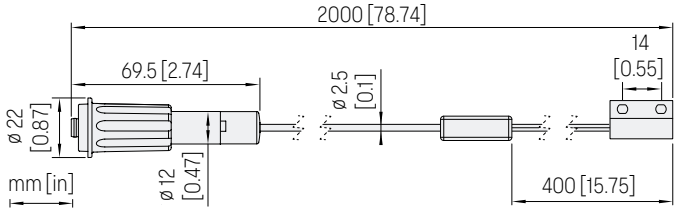

Figure 30 ANP115 door switch model dimensions

10. Vaisala services

10.1 Service centers

Vaisala offers comprehensive customer care throughout the life cycle of our products. Our service centers offer maintenance, calibration, upgrade, and repair services. All the services are provided worldwide with fast deliveries. For more information, go to vaisala.com/services.

The services are available from:

- Vaisala Online Store, store.vaisala.com
- Vaisala Services, helpdesk@vaisala.com

The provided services vary product by product.

10.2 Technical support

You can contact Vaisala technical support at vaisala.my.site.com/myvaisala or helpdesk@vaisala.com. You can find all our support channels at vaisala.com/support.

When contacting technical support, provide the following as applicable:

- Product name, model, and serial number
- Software/Firmware version
- Name and location of the installation site
- Name and contact information of a technical person who can provide further information
- Diagnostics package for the application

If applicable, also provide the following details:

- What failed (what worked / did not work)?
- Where did it fail (location and environment)?
- When did it fail (date, immediately / after a while / periodically / randomly)?
- How many failed (only one defect / other same or similar defects / several failures in one unit)?
- What was done when the failure was noticed?
- What was connected to the product and to which connectors?
- What is the input power source type, voltage, and what else (such as lighting, heaters, and motors) was connected to the same power output?
- Are all parts connected and grounded properly? Take a photo to help the troubleshooting.

10.3 Warranty

For warranty terms and conditions and the warranty claim process, see vaisala.com/warranty.

Note that warranty coverage may not apply if the product is damaged due to normal wear and tear, exceptional operating conditions, negligent handling or installation, or unauthorized modifications. See the applicable supply contract or Conditions of Sale for details of the warranty for each product.

Appendix A. Recycling instructions

These recycling instructions guide you on the end-of-life treatment of this Vaisala product. As waste regulations and infrastructure vary in each country, these instructions only indicate the different components to be separated and common ways to handle them. Always follow local requirements when disposing of the product. Vaisala encourages to use the best available recycling practices to minimize related environmental impacts.

Vaisala is committed to meeting the requirements of the EU Waste Electrical and Electronic Equipment (WEEE) Directive. This directive aims to minimize the impact of electrical and electronic goods on the environment, by increasing reuse and recycling, and reducing the amount of WEEE going to landfill. This symbol indicates that the product should be collected separately from other waste streams and treated appropriately.

This product uses easily removable single-use batteries. Remove the batteries and recycle them separately in accordance with local waste management practices and regulations.

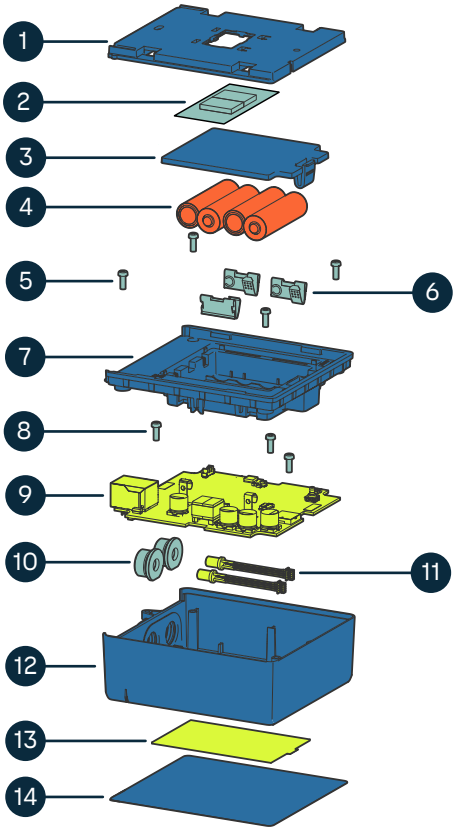

Figure 31 Materials for recycling

Recycling	Part	Material
Plastic waste	1	PC/ABS plastic blend
Metal waste	2	Neodymium and steel
Plastic waste	3, 7, 12	PBT plastic
Battery waste	4	Single-use alkaline or lithium batteries
Metal waste	5, 6, 8	Stainless steel
Electrical and electronic waste	9, 11, 13	Various materials

Recycling	Part	Material
Metal waste	10	Brass
Plastic waste	14	PMMA (acrylic)

Index

A

abbreviation.....18
accessories.....63
adjustment.....49

B

batteries.....20, 47

C

calibration.....49
cleaning.....47
configuring.....43

D

data files.....45
diagnostics.....59
dimensions.....65
display.....17
  icons.....20

E

error messages.....53
ESD protection.....22

F

firmware update.....50, 52
firmware version.....37

I

Insight.....42
Insight software.....42, 43
installation.....24
IP address.....37

J

Jade Smart Cloud.....40

M

MAC address.....37
measurement interval.....37
measurement parameter.....18
mounting.....28

N

network.....37

P

parts.....15
probe holder.....28
probes.....11
  connecting.....14
  detection.....36
  mounting.....28
  port identifier.....39
  replacing.....49
  swapping.....49
probe support.....30
product overview.....10
product returns.....59

R

recycling.....71
remote management.....39

S

safety.....23
serial number.....37
service centers.....69
service port.....21
settings
  battery type.....43
  monitoring system.....43
  network.....43
spare parts.....63

T

technical specification.....60
time.....37
trademarks.....9

troubleshooting.....53, 56

U

USB.....22

V

viewLinc Enterprise Server..... 39

VAISALA

Visit docs.vaisala.com for product documentation updates and translations.

vaisala.com

AKRIBIS · www.akribis.info · contacto@akribis.info