USER GUIDE

TMT130

Vaisala · Authorized Partner

Distributed by AKRIBIS

M211280EN-E

User Guide

Vaisala HUMICAP® Humidity and Temperature Transmitter Series

HMT130 and TMT130

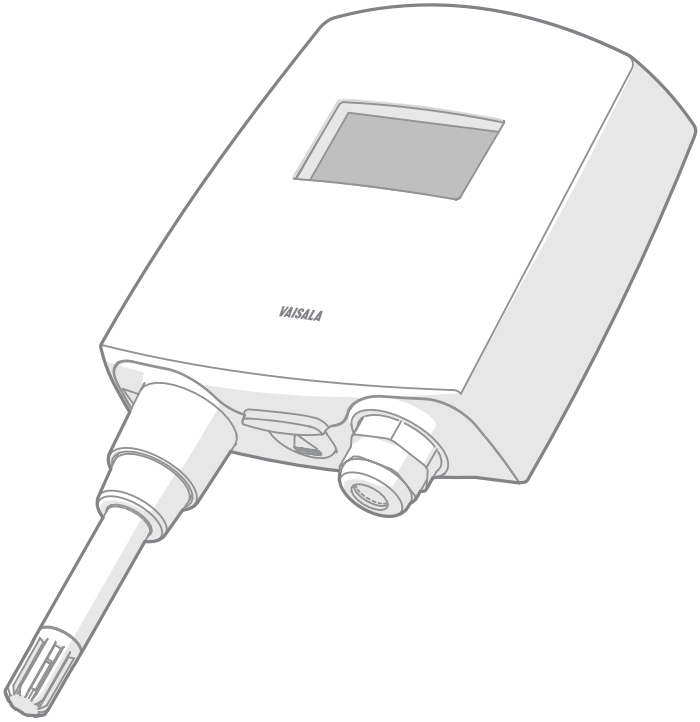

VAISALA

AKRIBIS · www.akribis.info · contacto@akribis.info

PUBLISHED BY

Vaisala Oyj
Vanha Nurmijärventie 21, FI-01670 Vantaa, Finland
P.O. Box 26, FI-00421 Helsinki, Finland
+358 9 8949 1
vaisala.com
docs.vaisala.com

© Vaisala 2025

No part of this document may be reproduced, published, or publicly displayed in any form or by any means, electronic or mechanical (including photocopying), nor may its contents be modified, translated, adapted, sold, or disclosed to a third party without prior written permission of the copyright holder. Translated document and translated portions of the document are based on the original English version. Parts of the translation may have been created using machine-assisted translation. In ambiguous cases, the English version is applicable, not the translation.

The contents of this document are subject to change without prior notice.

Local rules and regulations applicable to the products and services may vary, and they shall take precedence over the information contained in this document. Vaisala makes no representations on this document's compliance with the local rules and regulations applicable at any given time, and hereby disclaims any and all responsibilities related thereto. You are instructed to confirm the applicability of the local rules and regulations and their effect on the intended use of the products and services.

This document does not create any legally binding obligations for Vaisala towards customers or end users. All legally binding obligations are set forth exclusively in the applicable contract or in the relevant set of General Conditions of Vaisala (vaisala.com/policies).

This product contains software developed by Vaisala or third parties. Use of the software is governed by license terms and conditions included in the applicable contract or, in the absence of separate license terms and conditions, by the General License Conditions of Vaisala Group.

Table of contents

1. About this document ... 9
1.1 Version information ... 9
1.2 Related manuals ... 10
1.3 Documentation conventions ... 10
1.4 Trademarks ... 11

2. Product overview ... 12
2.1 Introduction to HMT130 ... 12
2.2 Fixed and remote probe models ... 12
2.3 Accessories ... 13
2.4 Optional display ... 13
2.5 Interchangeable probe ... 13
2.6 Constant output probe ... 14
2.7 Transmitter parts ... 14
2.8 Safety ... 16
2.8.1 ESD Protection ... 16

3. Installation ... 17
3.1 Opening the transmitter cover ... 17
3.2 Wall mounting ... 17
3.3 Installation with rain shield ... 19
3.4 Installation with radiation shield ... 20
3.5 Duct installation kit ... 21
3.5.1 Probe assembly with duct installation kit ... 22
3.5.2 Drilling instructions for duct installation kit ... 23
3.6 Probe mounting clamp ... 23
3.7 Probe mounting flange ... 24
3.8 Connections ... 25
3.8.1 Wiring ... 26
3.8.2 RS-485 bus termination ... 27

4. Serial line operation ... 28
4.1 Using the service port ... 28
4.2 Serial interface settings ... 28
4.3 Installing driver for the USB service cable ... 28
4.4 Connecting with a computer ... 29
4.5 List of serial commands ... 31
4.6 Device information and status ... 33
4.7 Serial line output and communication ... 37
4.8 Calibration commands ... 38
4.9 Configuring serial line operation ... 42
4.10 Measurement parameter configuration commands ... 43
4.11 Analog output configuration commands ... 44
4.12 Relay output configuration ... 47
4.13 Other commands ... 49

4.14 User port (RS-485) commands....54

5. Maintenance....58
5.1 Removing and fastening fixed probe....58
5.2 Removing and fastening remote probe....59
5.3 Testing analog outputs....60
5.4 Replacing the HUMICAP® sensor....60

6. Calibration and adjustment....62
6.1 Calibration and adjustment overview....62
6.2 Push-button calibration....62
6.2.1 Adjusting humidity and temperature with push buttons....63
6.3 Adjusting RH and T with MI70 handheld indicator....66
6.3.1 Field checking and adjustment using a calibrated reference probe....67
6.3.2 1-point adjustment using a calibrator....68
6.3.3 2-point adjustment using a calibrator....68
6.3.4 LiCl-NaCl adjustment....69
6.3.5 Temperature field check and adjustment using a calibrated reference probe....70

7. Troubleshooting....71
7.1 Error codes....71
7.2 Solving typical problems....72
7.3 Analog output error notification....73

8. Technical data....74
8.1 HMT130 specifications....74
8.2 TMT130 specifications....76
8.3 Spare parts and accessories....79
8.4 Transmitter dimensions....82

Appendix A: Calculation formulas....85
A.1 Calculation formulas overview....85
A.2 Dew point temperature....85
A.3 Dew/frost point temperature calculation....86
A.4 Mixing ratio calculation....86
A.5 Saturation vapor pressure calculation....86
A.6 Water vapor pressure calculation....87
A.7 Absolute humidity calculation....87
A.8 Enthalpy calculation....88
A.9 Accuracies of calculated variables....88
A.9.1 Accuracy of dew point temperature °C....88
A.9.2 Accuracy of mixing ratio g/kg (ambient pressure 1013 mbar)....89
A.9.3 Accuracy of wet bulb temperature °C....89
A.9.4 Accuracy of absolute humidity g/m^3....90

Index 91

Maintenance and calibration services 93

Warranty 93

Technical support 93

Recycling 93

List of figures

Figure 1 Main transmitter parts.....15
Figure 2 Opening the transmitter cover.....17
Figure 3 Wall mounting measurements.....18
Figure 4 Installation with rain shield.....19
Figure 5 Probe Installation with radiation shield.....20
Figure 6 Probe installation with the duct installation kit.....21
Figure 7 Probe assembly with duct installation kit.....22
Figure 8 Drilling instructions.....23
Figure 9 Optional probe mounting clamp.....24
Figure 10 Optional probe mounting flange.....24
Figure 11 HMT130 component board.....25
Figure 12 Power supply and voltage outputs (A), and serial communication and relay (B).....26
Figure 13 Removing the probe (fixed probe model).....58
Figure 14 Removing the probe (remote probe model).....59
Figure 15 HMT130 output voltage measurement.....60
Figure 16 Adjustment buttons.....63
Figure 17 Fixed probe model dimensions in mm [in], with HMP110.....82
Figure 18 Fixed probe model dimensions in mm [in], with TMP115.....83
Figure 19 Remote probe model dimensions in mm [in], with HMP110.....84

List of tables

Table 1 Document versions (English)....9
Table 2 Related manuals.... 10
Table 3 Wiring Table.... 26
Table 4 Default serial interface settings.... 28
Table 5 List of serial commands.... 31
Table 6 ? command.... 33
Table 7 CALCS command.... 33
Table 8 CDATE command....34
Table 9 CTEXT command.... 35
Table 10 AOUT command....35
Table 11 SYSTEM command.... 36
Table 12 VERS command....36
Table 13 R command....37
Table 14 S command.... 37
Table 15 INTV command.... 37
Table 16 SEND command.... 38
Table 17 CRH command....39
Table 18 CRHCLR command....39
Table 19 CT command.... 40
Table 20 CTCLR command.... 41
Table 21 ACAL command.... 41
Table 22 SERI command.... 42
Table 23 ECHO command....42
Table 24 SMODE command....43
Table 25 ENV command....43
Table 26 AMODE command....44
Table 27 AERR command....45
Table 28 ASEL command....45
Table 29 ATEST command....47
Table 30 RSEL command.... 47
Table 31 RMODE command.... 48
Table 32 ROUT command....48
Table 33 DSEL command....49
Table 34 FORM command.... 50
Table 35 HELP command....51
Table 36 ERRS command....51
Table 37 SAVE command....52
Table 38 RESTORE command....52
Table 39 RESET command....53
Table 40 FRESTORE command.... 53
Table 41 UNIT command....53
Table 42 SERI command.... 54
Table 43 SERI2 command....54
Table 44 ECHO command....55
Table 45 SMODE command....55

Table 46 SDELAY command....55
Table 47 INTV command....56
Table 48 ADDR command....56
Table 49 SEND command....56
Table 50 OPEN command....57
Table 51 CLOSE command....57
Table 52 Error codes, descriptions, and texts....71
Table 53 Problems and solutions....72
Table 54 HMT130 measurement performance....74
Table 55 HMT130 operating environment....75
Table 56 HMT130 inputs and outputs....75
Table 57 HMT130 mechanical specifications....76
Table 58 TMT130 measurement performance....76
Table 59 TMT130 operating environment....77
Table 60 TMT130 inputs and outputs....78
Table 61 TMT130 mechanical specifications....78
Table 62 HMT130 spare parts and accessories....79
Table 63 TMT130 spare parts and accessories....80
Table 64 Temperature dependence for A, m, and Tn....85
Table 65 Temperature dependence for A, m, and Tn....86
Table 66 Accuracy of dew point temperature °C....88
Table 67 Accuracy of mixing ratio g/kg (ambient pressure 1013 mbar)....89
Table 68 Accuracy of wet bulb temperature °C....89
Table 69 Accuracy of absolute humidity g/m^3....90

1. About this document

1.1 Version information

Table 1 Document versions (English)

Document code	Date	Description
M211280EN-E	February 2025	Added information on the wide-range temperature probe TMP115 option for TMT130 transmitters. Updated sections: • Introduction to HMT130 (page 12) • Accessories (page 13) • Fixed and remote probe models (page 12) • Interchangeable probe (page 13) • Transmitter parts (page 14) • Removing and fastening fixed probe (page 58) • Calibration commands (page 38) • Push-button calibration (page 62) • Analog output error notification (page 73) • HMT130 specifications (page 74) • Spare parts and accessories (page 79) • Transmitter dimensions (page 82) Added sections: • TMT130 specifications (page 76)
M211280EN-D	December 2021	Information on temperature transmitter model TMT130 added. Updated sections: • Description and example for ct command in Calibration commands (page 38) • Temperature measurement accuracy specifications and spare part probe models in HMT130 specifications (page 74) • Visual and textual style updates Removed sections: • Patent notice • Regulatory compliances (now listed in HMT130 specifications (page 74)) • Adjustment with HMI41 (following the discontinuation of HMI41)
M211280EN-C	January 2018	Previous version. Factory calibration uncertainty specification updated. Spare parts list updated. Document template updated, content structure revised.

1.2 Related manuals

For the latest versions of these documents, see docs.vaisala.com.

Table 2 Related manuals

Document code	Description
M210185EN	Vaisala HMK15 Humidity Calibrator User Guide
M210297EN	Vaisala HM70 Handheld Humidity and Temperature Meter User Guide
M211060EN	Vaisala HMP60 and HMP110 Series Humidity and Temperature Probes User Guide

1.3 Documentation conventions

WARNING! Warning alerts you to a serious hazard. If you do not read and follow instructions carefully at this point, there is a risk of injury or even death.

CAUTION! Caution warns you of a potential hazard. If you do not read and follow instructions carefully at this point, the product could be damaged or important data could be lost.

Highlights important information on using the product.

Gives information for using the product more efficiently.

Lists tools needed to perform the task.

Indicates that you need to take some notes during the task.

1.4 Trademarks

Vaisala® and HUMICAP® are registered trademarks of Vaisala Oyj.

All other product or company names that may be mentioned in this publication are trade names, trademarks, or registered trademarks of their respective owners.

2. Product overview

2.1 Introduction to HMT130

Vaisala HMT130 Series HUMICAP® Humidity and Temperature Transmitters measure relative humidity and temperature and convert the measurements to voltage outputs and RS-485. Other measurement parameters, such as dew point (T_d) can be calculated from the basic RH and T values according to the device configuration. HMT130 is powered with a 10–35 V DC or a 24 V AC supply (15–35 V DC or 24 V AC required when using 0–10 V output). It outputs two analog voltage signals with nominal 0–10 V range. HMT130 has also an RS-485 digital interface and a relay.

The HMP110 series measurement probes used with HMT130 incorporate the reliable Vaisala HUMICAP® humidity sensor technology.

The HMT130 transmitter's output parameters are configurable. Available parameters for outputs are limited to two at a time. These two parameters can be used freely at any outputs (display, service port, and voltage outputs).

Available parameters are RH, T, T_d, $T_{d/f}$, a, x, h, T_w, p_{ws}, and p_w.

The default output parameters are set at the factory during order time. These factory preset parameters selections can be changed afterwards via the service port if necessary.

TMT130 transmitter

The TMT130 transmitter is a single-parameter model, with temperature as the only output parameter from a temperature-only HMP110T probe or a TMP115 wide-range temperature probe.

The recommended firmware version for TMT130 transmitters equipped with a TMP115 probe is 1.2.0 or newer. To check the firmware version of your TMT130 transmitter, you can use the free Insight PC software, available at vaisala.com/insight.

2.2 Fixed and remote probe models

The transmitter is available either with a fixed probe directly attached to the transmitter housing or a remote probe with different (3/5/10/20 m (10/16/33/66 ft)) cable lengths. All extension cables can be easily cascaded in order to obtain longer reach.

In TMT130 transmitters ordered with a TMP115 probe, the probe is always a fixed probe directly attached to the transmitter. The TMP115 probe includes a cable between its probe body and sensor tip. The total length of the TMP115 probe is 3 m (9.8 ft), including the probe body and sensor tip.

More information

- Spare parts and accessories (page 79)

2.3 Accessories

The following accessories are optionally available:

- Rain shield with installation kit
- Rain/solar radiation shield installation kit (for pole installation, remote probe model)
- Duct installation kit (for remote probe model)
- Probe mounting flange (for remote probe model)
- Probe mounting clamp (for remote probe model)
- Probe holder (for remote probe model)
- Constant output probe (HMP1100REF, gives constant RH and T values)

More information

- Spare parts and accessories (page 79)

2.4 Optional display

The transmitter is also available with an optional graphical 128×64 pixel resolution LCD display. The display shows the measurement results of selected parameters in selected units (metric or non-metric, defined when ordering the transmitter). The parameters are displayed simultaneously on two separate rows on the display.

More information

- Transmitter parts (page 14)

2.5 Interchangeable probe

The probes used in the transmitter are fully interchangeable. You can easily remove the probe and replace it with a new one without having to adjust the transmitter.

> Only probes that have a compatible digital output (VDIGI mode) can be used with the transmitter. Compatible probes have the letter "V" as the first letter in their order code. The order code is written on the probe.

More information

- Removing and fastening fixed probe (page 58)
- Removing and fastening remote probe (page 59)
- Technical support (page 93)

2.6 Constant output probe

The constant output probe HMP110REF is a testing accessory that can be used to check the transmitter's functions and measurement signal transfer chain all the way to the control system. The constant output probe does not measure humidity and temperature; instead, it outputs constant humidity and temperature readings.

The values output by the constant output probe are specified when ordering. These values are written on an additional label on the probe body.

The procedure for using the constant output probe is simply to replace the original probe for the duration of the testing.

1. Disconnect the standard probe from the transmitter.
2. Connect the constant output probe to the transmitter.
3. Check that all used outputs (analog, display, serial line) show the correct measurement values.
4. After checking the outputs, disconnect the constant output probe and reconnect the original probe.

The transmitter goes to error state for a short time when the probe is changed. This is normal.

More information

- Removing and fastening fixed probe (page 58)
- Removing and fastening remote probe (page 59)

2.7 Transmitter parts

Figure 1 (page 15) shows the main transmitter parts. The HMP110 probe is shown as an example probe connected to the transmitter.

- On the left is a model with a remote probe and no display.
- On the right is a model with a fixed probe and an optional display.

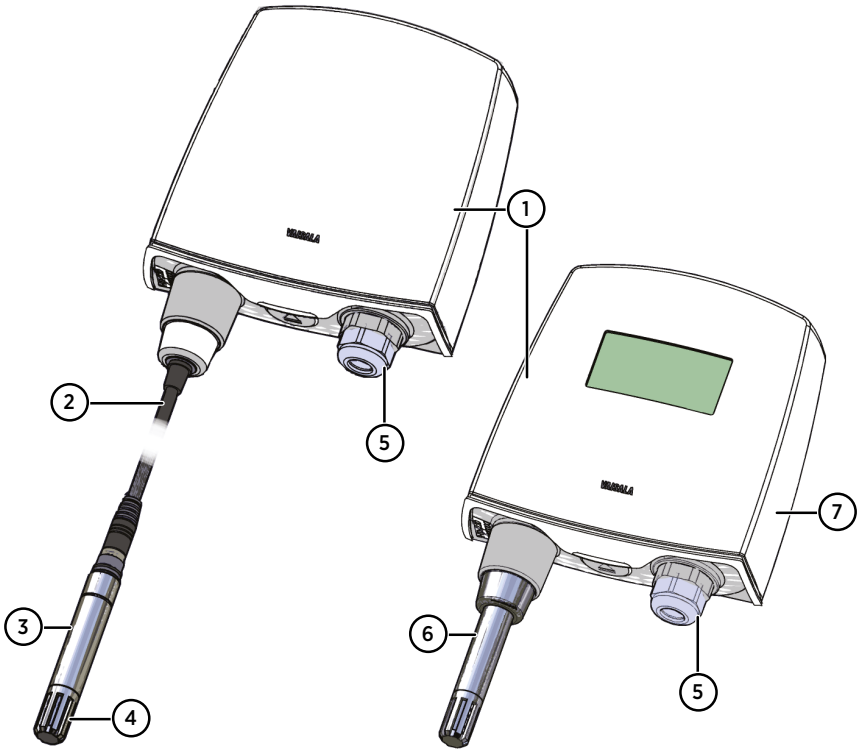

Figure 1 Main transmitter parts

1 Transmitter enclosure
2 Probe connection cable
3 Remote probe (HMP110 shown as an example)
4 Plastic grid filter
5 Cable bushing: cable gland, cable grommet, or conduit fitting
6 Fixed probe (HMP110 shown as an example)
7 Serial number and device configuration code for the options selected with the Vaisala order form (under the cover)

For explanations for your transmitter's configuration code, see the transmitter's order form at docs.vaisala.com.

More information

- Spare parts and accessories (page 79)

2.8 Safety

The transmitter delivered to you has been tested for safety and approved as shipped from the factory. Note the following precautions:

CAUTION! Do not modify the unit or use it in ways not described in the documentation. Improper modification or use may lead to safety hazards, equipment damage, failure to perform according to specification, or decreased equipment lifetime.

2.8.1 ESD Protection

Electrostatic Discharge (ESD) can cause immediate or latent damage to electronic circuits. Vaisala products are adequately protected against ESD for their intended use. It is possible to damage the product, however, by delivering electrostatic discharges when touching, removing, or inserting any objects inside the equipment housing.

To make sure you are not delivering high static voltages yourself:

- Handle ESD sensitive components on a properly grounded and protected ESD workbench.
- When an ESD workbench is not available, ground yourself to the equipment chassis with a wrist strap and a resistive connection cord.
- If you are unable to take either of the above precautions, touch a conductive part of the equipment chassis with your other hand before touching ESD sensitive components.
- Always hold component boards by the edges and avoid touching the component contacts.

3. Installation

3.1 Opening the transmitter cover

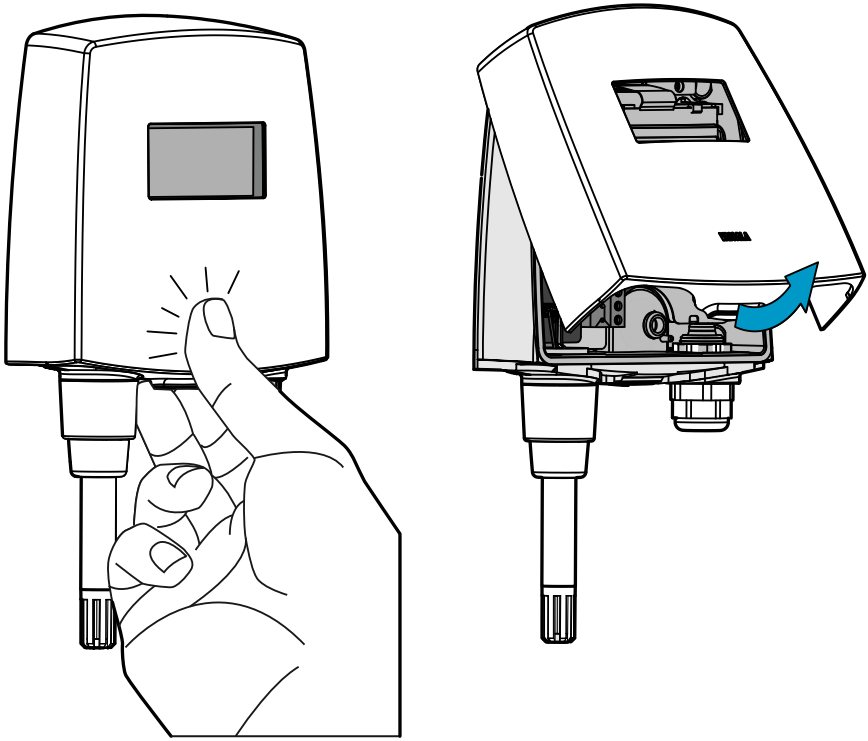

Figure 2 Opening the transmitter cover

To open the transmitter cover:

1. If the transmitter is not mounted already, hold it against a flat surface.
2. Push on the cover with your thumb, and pull the bottom part of the cover towards yourself.

3.2 Wall mounting

To mount the transmitter on a wall:

1. Remove the transmitter cover.
2. Make sure that the transmitter is correctly aligned and attach it directly to the wall with up to four screws (not included in the package). Figure 3 (page 18) shows the distances between attachment points.

CAUTION! It is possible to damage the display when tightening the screws, as there is not much room between the upper fastening holes and the exposed display component. Be particularly careful when using a cordless drill.

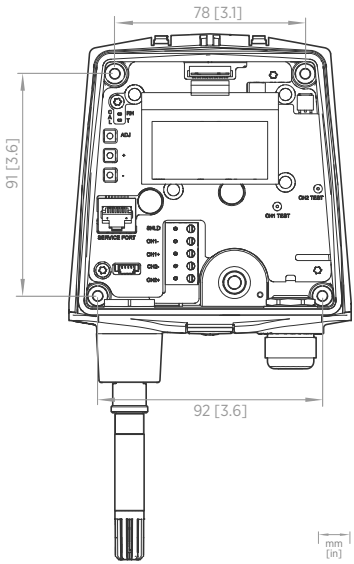

Figure 3 Wall mounting measurements

Select the size and type of the fastening screws according to the wall material (for example, wood or stone). Even though using all four screws is strongly recommended, the transmitter enclosure fastening holes are initially covered with a thin plastic membrane, so less than four screws could also be used without sacrificing the ingress protection (IP) class of the enclosure. The diameter of the fastening screws is typically 3.5 ... 4 mm (0.14 ... 0.16 in).

More information

- Opening the transmitter cover (page 17)

3.3 Installation with rain shield

The installation kit with rain shield (Vaisala item code 215109) includes a metal mounting plate and a rain shield for the transmitter.

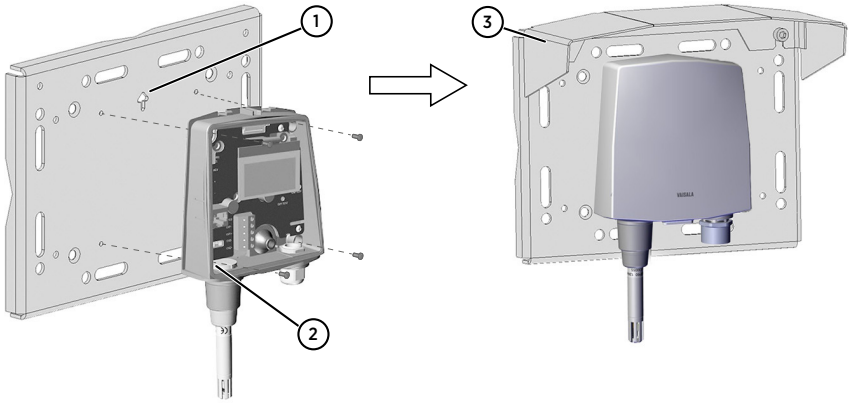

Figure 4 Installation with rain shield

To install the transmitter with the rain shield:

1. Fasten the metal mounting plate to the wall or pole with screws. Note the arrow on the mounting plate. Attach the mounting plate with the arrow pointing upwards.
2. Drill holes for the screws in the transmitter frame, and fasten the transmitter to the metal mounting plate with four (M4) screws.
3. Fasten the rain shield to the metal mounting plate with two (M6) mounting screws.

3.4 Installation with radiation shield

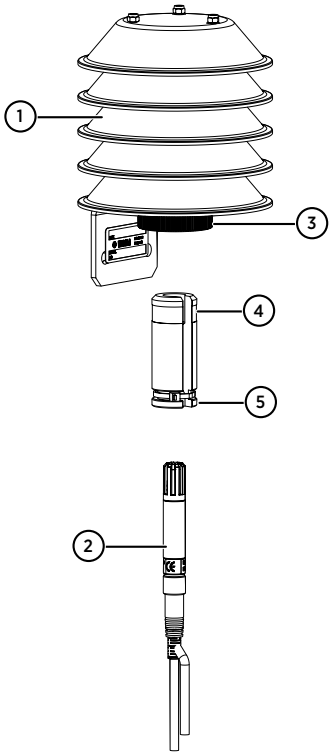

DTR504 with probe installation kit (Vaisala item code DTR504A) includes the rain/solar radiation shield DTR504 and a plastic installation support for a remote humidity probe. If you already have the DTR504 shield and need only the installation support for the probe, the installation support is available with Vaisala item code 227777.

Figure 5 Probe Installation with radiation shield

1 DTR504
2 Probe
3 Plastic nut
4 Installation support (item code 227777)
5 Cable tie

To install the probe with a radiation shield:

1. Fasten the probe (2) to the installation support with a cable tie (5).
2. Insert and attach the support to the radiation shield by tightening the plastic nut (3).
3. Attach the entire radiation shield/probe assembly to a pole mast (pole mast diameter: 30 ... 60 mm (1.2 ... 2.3 in) with a U-bolt and a support arm.

3.5 Duct installation kit

The duct installation kit includes a plastic pipe with a flange (Vaisala item code 215619). To install the probe with the duct installation kit, drill a hole in the duct wall, assemble the probe to the duct installation kit, slide the probe head through the hole, and attach the flange to the duct wall with four screws.

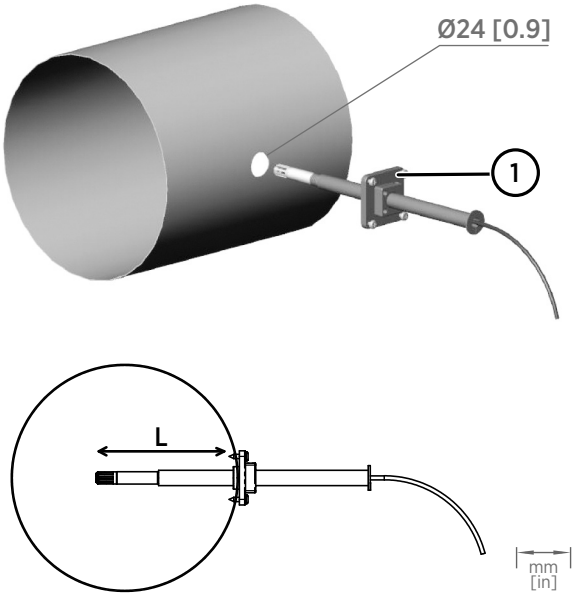

Figure 6 Probe installation with the duct installation kit

1 Tension screw

The installation depth (distance **L**) can be adjusted and locked in place with the tension screw.

3.5.1 Probe assembly with duct installation kit

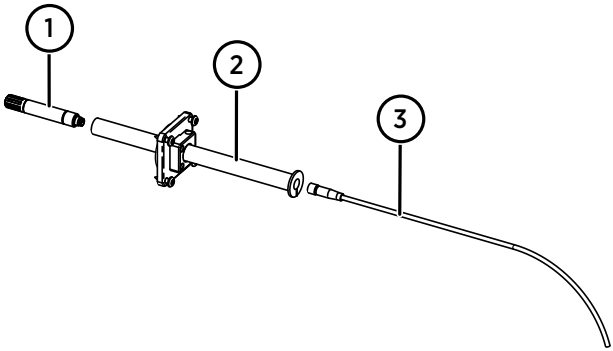

Figure 7 Probe assembly with duct installation kit

1 Probe
2 Duct installation kit
3 Probe cable

1. Slide the probe cable through the plastic pipe in the duct installation kit.
2. Attach the probe cable to the probe.
3. Attach the probe assembly to the duct.

3.5.2 Drilling instructions for duct installation kit

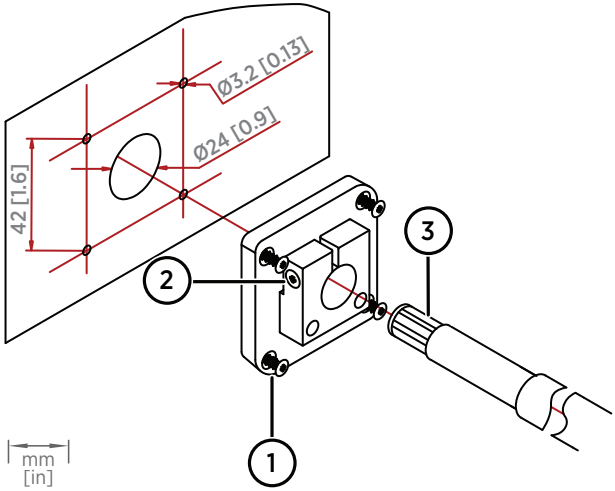

Figure 8 Drilling instructions

1 Mounting screw
2 Tension screw
3 Probe assembled in plastic pipe of duct installation kit

To drill the holes for the duct installation kit:

1. Use a 24-mm (0.9-in) drill bit to drill a hole to the duct wall for the probe.
2. Drill holes for the duct installation kit mounting screws around the hole in a square arrangement, 42 mm (1.6 in) apart from each other. Use a 3.2-mm (0.13-in) drill bit to drill the holes for the mounting screws (four ST4.2×16-C-Z DIN 7981 screws).

3.6 Probe mounting clamp

The optional mounting clamp makes it easy to install the probe on the wall of the measurement environment. The probe can be detached for calibration simply by loosening the lower screw. You can order a single clamp (Vaisala order code 225501) or a set of 10 clamps (226067).

Installing the entire probe in the measurement environment prevents heat conduction to the sensor, and is the recommended installation method.

Figure 9 Optional probe mounting clamp

CAUTION! Attaching the probe mounting clamp to a conductive wall material should be avoided, since the potential galvanic connection to the power supplies and uncontrolled earth current loops could cause measurement errors or even damage to the transmitter.

3.7 Probe mounting flange

The probe mounting flange (Vaisala item code 226061) is a general purpose mounting flange for 12 mm (0.47 in) diameter probes. It can be used to hold the probe in a through-wall installation.

The coaxial silicone plug that is delivered with the flange is not suitable for use with the transmitter's probe cable.

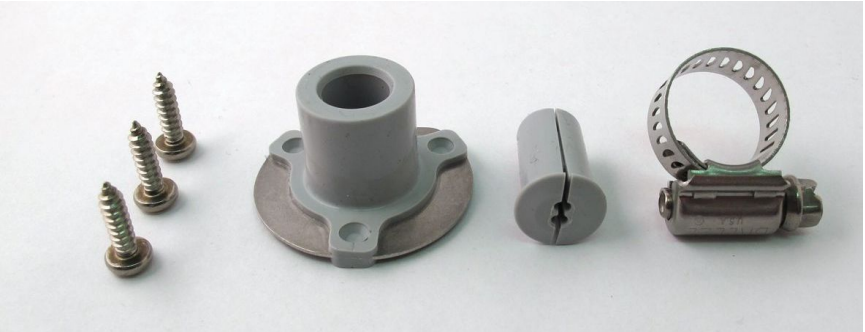

Figure 10 Optional probe mounting flange

3.8 Connections

Figure 11 (page 25) shows the main parts of the HMT130 component board, including the wiring connectors.

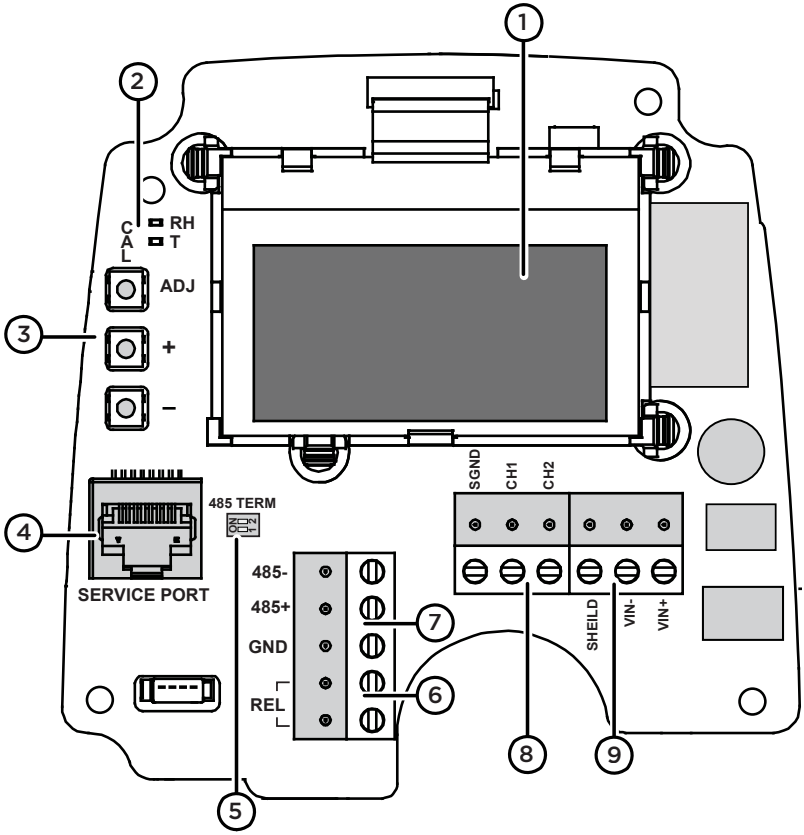

Figure 11 HMT130 component board

1 Optional LCD display
2 Indicator LEDs
3 Adjustment buttons
4 Service port
5 RS-485 bus termination switch
6 Relay terminals
7 RS-485 bus
8 Analog outputs
9 Power supply connectors

3.8.1 Wiring

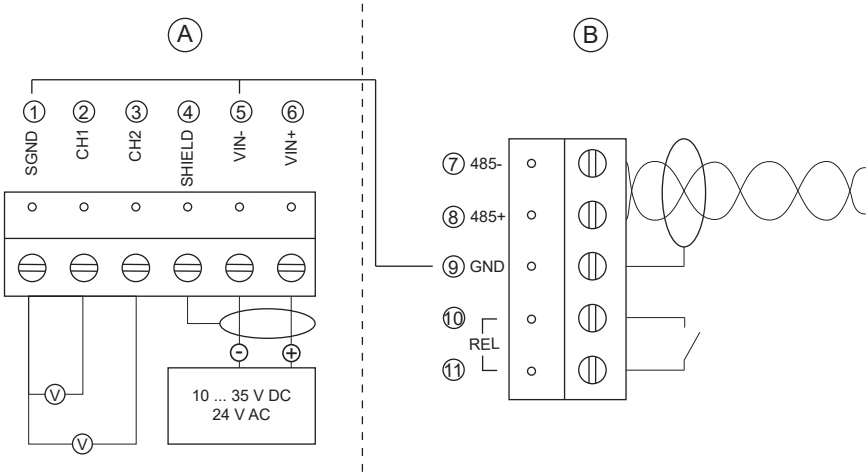

Figure 12 Power supply and voltage outputs (A), and serial communication and relay (B)

15 ... 35 V DC or 24 V AC is needed when using the 0 ... 10 V output.

Table 3 Wiring Table

Terminal [1]	Description
1 [2]	SGND (signal ground)
2	CH1+ (signal +)
3	CH2+ (signal +)
4	Cable shield (optional)
5 [2]	Vin- (power supply - or V AC)
6	Vin+ (power supply + or V AC)
7	485-
8	485+
9 [2]	GND (ground)
10	Relay

Terminal [1)]	Description
11	Relay

1) *Numbers 1 ... 6 in the first column of the wiring table refer to section (A) and numbers 7 ... 11 to section (B) in Figure 12 (page 26).*
2) *There is an internal connection between numbers 1 and 5 on section (A) and number 9 on section (B).*

To connect the wiring:

1. Remove the transmitter cover as instructed in Opening the transmitter cover (page 17).
2. Insert the signal wires through the selected cable gland/conduit fitting in the bottom of the transmitter or alternatively through the rubber grommet at the back side of the transmitter.
3. Connect the wires as indicated in Figure 12 (page 26) and in Table 3 (page 26). Suitable wire size is 0.5 ... 1.5 mm^2 (20 ... 15 AWG).
4. Switch on the RS-485 bus termination switch if necessary.
5. Close the cover by keeping it slightly tilted and first attaching it to the fixing snaps at the top of the enclosure base. Then push the lower part of the cover firmly forward until it locks. The transmitter is ready for use.

More information

- RS-485 bus termination (page 27)

3.8.2 RS-485 bus termination

If you use RS-485 to connect just one HMT130 to a master computer, enable the internal termination of HMT130 by switching switches 1 and 2 **ON**. Make sure that the master's end of the line is also terminated (by using the master's internal termination or with a separate terminator).

If you are connecting many transmitters to the same RS-485 bus, make sure that switches 1 and 2 are **OFF** and terminate the bus with separate terminators at both ends. This allows removing any transmitter without blocking the bus operation.

4. Serial line operation

4.1 Using the service port

The transmitter's component board has an 8-pin RJ-45 connector for service use. The service port uses RS-232 signaling levels. Vaisala offers an optional USB cable (Vaisala item code 219685) for connecting the transmitter to your computer.

> The service port is intended for short-term use such as calibration. For permanent installation, use the analog output.
> Connecting a computer to the service port may cause erroneous analog output because of a possible ground loop. Use the service port for service only and disconnect the computer after the service operation.

The cable can also provide operation power to the transmitter, so the wires at the screw terminals need not be connected in order to operate the transmitter.

If you have not used the transmitter's USB cable before, install first the driver for it on your computer.

More information

- Installing driver for the USB service cable (page 28)

4.2 Serial interface settings

Table 4 Default serial interface settings

Property	Description/Value
Bit rate	19200
Parity	None
Data bits	8
Stop bits	1
Flow control	None

4.3 Installing driver for the USB service cable

> Only Windows® operating systems are supported by the driver of the USB service cable.

1. Connect the USB service cable to a USB port on your computer. Windows® detects the new device and installs the appropriate driver.
2. Open **Device Manager** from the Windows® Start menu. Use search to find it if necessary (search for "device").
3. Locate the cable in the list of devices:
   - If the device is listed as **Vaisala USB Device** with a COM port number in brackets, the cable is ready for use.
   - If the device is listed as **Vaisala USB Instrument Cable** without a COM port number listed, you must install the driver manually.

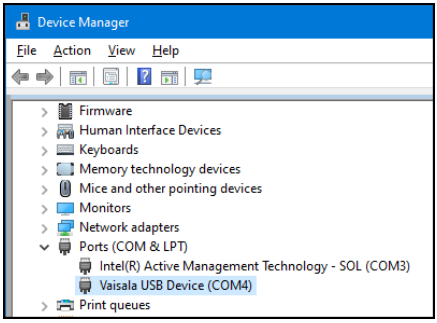

4. To install the driver manually:
   a. Disconnect the USB service cable from the computer.
   b. Download the Vaisala USB driver at vaisala.com/software (select the appropriate USB Instrument Driver Setup for your cable).
   c. Extract the driver zip file and run the USB driver installation program *`Vaisala USB Device Driver Setup.exe`*. Accept the installation defaults.
   d. Go back to step 1 and verify that the driver installation works as expected.

4.4 Connecting with a computer

- Vaisala USB service cable (item code 219685)
- Computer with:
  - Windows operating system
  - Terminal application (for example PuTTy, available from http://www.vaisala.com/software)
  - Free USB port
  - Driver for Vaisala USB service cable installed (available for download at http://www.vaisala.com/software)

The steps below describe how to connect to the transmitter using the PuTTY terminal application for Windows and a USB computer connection cable.

1. If you have not used the Vaisala USB cable before, install the driver before attempting to use the cable.
2. Connect the USB cable between your computer and the transmitter's service port.
3. Start the PuTTY application.
4. Select **Connection > Serial & USB** and check that the correct COM port is selected in the **Serial or USB line to connect to** field. If you are using the PuTTY terminal application supplied by Vaisala, you can press the **USB Finder** button to open the Vaisala USB Instrument Finder program.
5. Check that the other serial settings are correct for your connection, and change if necessary. **Flow control** should be set to **None** unless you have a reason to change it.

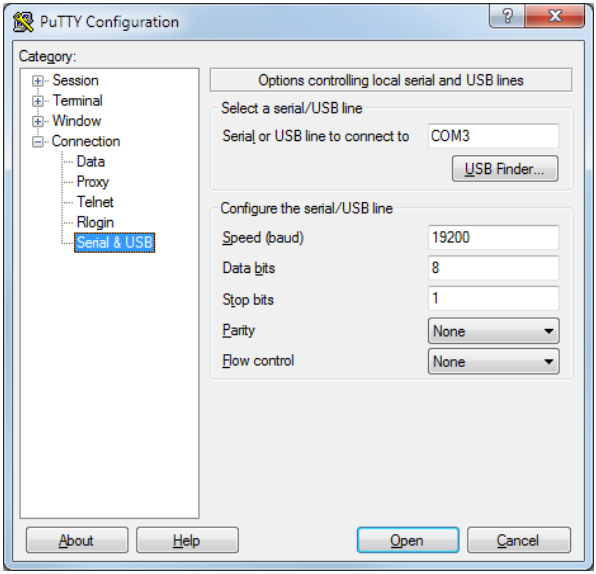

6. Select **Terminal**. Use the following settings:
   - **Local Echo**
     Select **Force on**. This setting ensures that your typing is shown on the session window.
   - **Send line ends with line feeds (CR+LF)**
     Make sure this option is not selected. Enabling line end sending with line feeds can cause issues with the terminal connection.

7. To open the connection window and start using the serial line, select **Open**.

> If PuTTY is unable to open the serial port you selected, it shows you an error message instead. If this happens, restart PuTTY and check the settings.

4.5 List of serial commands

All commands can be issued either in uppercase or lowercase.

The notation **<cr>** refers to pressing the carriage return (**ENTER**) key on your computer keyboard. Enter a **<cr>** to clear the command buffer before starting to enter commands.

Whenever you change any of the parameters and want to store the changes permanently, use the **SAVE** command.

> Measurement parameters are referred to as *quantities* in the transmitter's software.

Table 5 List of serial commands

Command	Description
?	Show transmitter information
??	Show transmitter information (POLL mode)
ACAL	Calibrate analog outputs
ADDR	Set/show device address
AERR	Set/show analog output error levels
AMODE	Set/show analog output mode
AOUT	Show analog output status
ASEL	Set/show analog output parameters and scaling
ATEST	Test analog outputs
CALCS	Set/show measured parameters
CDATE	Set/show calibration date
CLOSE	Start POLL mode
CRH	Calibrate probe RH
CRHCLR	Restore probe RH factory calibration
CT	Calibrate probe T

Command	Description
CTCLR	Restore probe T factory calibration
CTEXT	Set/show calibration info
DSEL	Set/show displayed parameters
ECHO	Set/show terminal echo mode
ENV	Set/show environmental parameters
ERRS	Display active errors
FORM	Set/show output formatting
FRESTORE	Restore all transmitter settings to factory defaults
HELP	List available commands
INTV	Set/show the continuous output interval
OPEN	Stop POLL mode
R	Start continuous outputting
RESET	Reset transmitter
RESTORE	Restores the latest saved settings
RMODE	Set/show relay operating mode
ROUT	Show all relay-related parameters
RSEL	Set/show relay parameter
S	Stop continuous outputting
SAVE	Save changed settings to FLASH memory
SDELAY	Set/show RS-485 turnaround time for user port
SEND	Output the reading once
SERI	Set/show service port settings (default: 19200 N 8 1)
SERI2	Set/show user port settings (default: 19200 N 8 1)
SMODE	Set/show the serial interface mode
SYSTEM	Show transmitter information and build date
UNIT	Set/show output unit
VERS	Show firmware version of the transmitter

4.6 Device information and status

Table 6 ? command

Syntax	Description
?<cr>	Show listing of device information.
??<cr>	Show listing of device information even if device is in poll mode and connection has not been opened using the **open** command.

Example:

```
?
Device Name          : HMT130
SW Name              : HMT130
SW model             : HMT130
SW version           : 0.9.3.389
Serial number        : "F2220101"
Address              : 0
Unit                 : METRIC
Ch1 Status           : ON
Ch2 Status           : ON
Probe name           : "HMP110"
Probe SW             : "1.01.1"
Probe SW date        : ""
Probe SN             : "F0740011"
```

Table 7 CALCS command

Syntax	Description
calcs [q1 q2]<cr> where q1, q2 Any two of the allowed measurement parameters [1)], that is, **RH**, **T**, **TD**, **TDF**, **A**, **X**, **H**, **TW**, **PWS**, **PW**	The **calcs** command shows the abbreviations of the parameters measured by the transmitter. The command can also be used to select the desired parameters for measurement. Only after the parameters have been set with the **calcs** command, can these parameters be selected for different outputs (see commands **dsel**, **asel**, and **form**). The parameters in **dsel**, **asel**, **rsel**, and **form** must match with those in **calcs**.

Syntax	Description

Examples:
`>calcs RH Td`
`>`
`calcs td t`
`>`
The TMT130 temperature transmitter model has only one measurement parameter, T.	

1) Measurement parameters are referred to as 'quantities' in the transmitter's software.

Table 8 CDATE command

Syntax	Description
cdate<cr>	Show calibration date. Calibration refers to the calibration of the transmitter's analog outputs.
cdate [yyyymmdd]<cr>	Set a new calibration date. **yyyy-mm-dd** = Year (yyyy), month (mm) and day (dd) of calibration

Example:
`>cdate`
`Calibrated : "NOT SET"`
`>`	

Example (set a new calibration date to June 30, 2017):
`cdate 2017-06-30`
`Calibrated : "2017-06-30"`	

Table 9 CTEXT command

Syntax	Description
ctext<cr>	Show calibration information text. Calibration refers to the calibration of the transmitter's analog outputs.
ctext [text]<cr>	Set a new calibration information text to be shown after the automatic text "**Calib. info**".

Example:

```
ctext
Calib. info: "VAISALA HELSINKI"
>
```

Example (set a new information text):

```
ctext Calibration lab 2
Calib. info: "Calibration lab 2"
>
```

Table 10 AOUT command

Syntax	Description

aout<cr>	The **aout** command shows the following information:
	• **Analog out mode** is the output mode for the channel, for example 0 ... 10 V.
	• **Error level** is the level that the analog output is set to in case of transmitter error.
	• **Status** indicates the current status of the channel. The statuses are:
	  • **ON**: Normal measurement operation.
	  • **OFF**: No quantity selected for the channel using the **asel** command. See Table 28 (page 45).
	  • **ERROR**: Transmitter error, channel set to error level.
	  • **TEST**: Analog channel being tested using the **atest** command. See Table 29 (page 47).

Syntax	Description
Example (no active errors):	

```
>aout
*** ANALOG OUTPUT 1 ***
Ch1 Analog out mode : 0_10V
Ch1 Error level     : 10.8
Ch1 Quantity        : RH
Ch1 Status          : ON
RH lo               : 0
RH hi               : 100
RH                  : 36.64 %
Ch1 Voltage         : 3.66 V

*** ANALOG OUTPUT 2 ***
Ch2 Analog out mode : 0_10V
Ch2 Error level     : 10.8
Ch2 Quantity        : T
Ch2 Status          : ON
T lo                : -60
T hi                : 100
T                   : 23.85 'C
Ch2 Voltage         : 5.24 V
>
```

Table 11 SYSTEM command

Syntax	Description
system<cr>	Show probe firmware information.
Example:	

```
system
Device Name         : HMT130
SW Name             : HMT130
SW model            : HMT130
SW version          : 1.0.0.500
Serial number       : A1234567
>
```

Table 12 VERS command

Syntax	Description
vers<cr>	Show firmware version of the probe.
Example:	

```
vers
HMT130 / 0.1.0.103
```

4.7 Serial line output and communication

Table 13 R command

Syntax	Description
r<cr>	S Use the **r** command to start the continuous outputting of measurement values as an ASCII text string to the serial line. The output always includes the readings of the currently selected analog output parameters. Outputting the results continues in intervals issued with the command **intv**. You can stop the output by entering the **s** command. You can define the output data formatting with the **form** command. With X parameter the transmitter will output RH + T value in predefined format regardless of what parameters are selected.

Example:

```
r
RH= 25.10% T= 24.77'C
RH= 25.12% T= 24.96'C
...
```

Table 14 S command

Syntax	Description
s<cr>	Stop the continuous outputting that was started with the **r** command.

Example:

```
...
RH= 25.10% T= 24.77'C
RH= 25.12% T= 24.96'C
s
```

Table 15 INTV command

Syntax	Description
intv<cr>	Use the **intv** command to show or set the output interval of the serial line measurement messages (applies when **r** command or **RUN** mode is used). The shortest output interval is one second. This command has no effect on the operation of the analog outputs.

Syntax	Description
intv [iii uuu]<cr>	Set the output interval. iii = interval, range 0 ... 255. u = unit for interval setting: • s = seconds • min = minutes • h = hours If you set the interval to 0, the output messages are output as quickly as they are generated, without additional delay.
Example: **intv 5 s** Output interval: 5 S >	

Table 16 SEND command

Syntax	Description
send [x] <cr>	Use the **send** command to output a single measurement reading from the transmitter. When you enter the **x** parameter, the transmitter will output RH + T value in predefined format regardless of what parameters are selected.
Example: **send** RH= 25.12 % T= 24.91 'C >	

4.8 Calibration commands

Serial commands that are related to calibration are described in this section. For the actual calibration procedures, see Calibration and adjustment overview (page 62).

Table 17 CRH command

Syntax	Description
crh<cr>	Use the **crh** command to perform a 1-point or 2-point humidity (RH) calibration. When performing a 1-point calibration, you need to place the probe in a single humidity reference with RH < 50%. Run the command and enter the exact RH of the reference after the measurement has stabilized. Exit the command by pressing the **ESC** key before proceeding to the second point (see example 3). To update the value, press **ENTER** without inputting a value. For 2-point calibration, the first point requires a RH < 35% humidity reference, the second point must be RH > 50%.

Example 1: 1-point calibration

```
>crh
RH:         11.29915720 Ref1 ? 11.3
Press ENTER to continue or ESC to exit
OK
>
```

Example 2: 2-point calibration

```
>crh
RH:         11.29915720 Ref1 ? 11.3
Press ENTER to continue or ESC to exit
RH:         75.04306440 Ref2 ? 75
OK
>
```

Example 3: No calibration, only updating the value

```
>crh
RH:     20.28000200 Ref1 ?
RH:     20.14000000 Ref1 ?
Calibration terminated with ESC
>
```

Table 18 CRHCLR command

Syntax	Description
crhclr<cr>	Use the **crhclr** command to restore the probe RH factory calibration.

Syntax	Description
Example:	

```
>crhclr
OK
>
```

Table 19 CT command

Syntax	Description
ct<cr>	Use the **ct** command to perform a 1-point or 2-point temperature calibration. When performing a 1-point calibration, you need to place the probe in a single temperature reference. Run the command and enter the exact temperature of the reference after the measurement has stabilized. Exit the command by pressing the **ESC** key before proceeding to the second point. To update the value, press **ENTER** without inputting a value. For 2-point calibration, the second reference point must be at least 30 °C (86 °F) warmer than the first. The measurement reading for the second point will appear when this requirement is met.

Example 1: 1-point calibration

```
>ct
T  21.9827 Ref1 ? 22
Press ENTER to continue or ESC to exit
OK
>
```

Example 2: 2-point calibration

```
>ct
T  22.0007 Ref1 ? 22
Press ENTER to continue or ESC to exit
T  54.9847 Ref2 ? 55
OK
>
```

Example 3: No calibration, only updating the value

```
>ct
T  22.0007 Ref1 ?
T  22.0145 Ref1 ?
Calibration terminated with ESC
>
```

Table 20 CTCLR command

Syntax	Description
ctclr<cr>	Use the **ctclr** command to restore the probe temperature factory calibration.

Example:

```
>ctclr
OK
>
```

Table 21 ACAL command

Syntax	Description
acal<cr>	Use the **acal** command to calibrate the analog current loop outputs. After you give this command, the CH1 analog output of the transmitter is set to the low limit (0 V). Measure the output and enter the measured value. After entering the low limit, you must measure and enter the high limit also. The high limit is 2 V or 10 V, depending on the selected analog output mode. The same procedure is then repeated with CH2. Calculated coefficients are printed after the measured values are given. Use the SAVE command after completing the ACAL command to store the adjustment.

Example:

```
>acal
Ch1  V1 (V)  ? 0.11
Ch1  V (V)  ? 10.23
  1.92871100E+02 a0
  2.58300400E+03 a1
OK
Ch2  V1 (V)  ? 0.1
Ch2  V2 (V)  ? 10.23
  2.18956060E+02 a0
  2.58045380E+03 a1
OK
>
```

The question mark is displayed after a certain stabilization time has expired. Only enter values after the question mark is displayed. Values entered before the question mark are discarded.

4.9 Configuring serial line operation

Table 22 SERI command

Syntax	Description
seri [b p d s]<cr> where b baud rate (9600, 19200, 38400, 76800, 115200) p parity (n = none, e = even, o = odd) d data bits (7 or 8) s stop bits (1 or 2)	Use the **seri** command to show or set the serial line settings for the serial port that you are currently using. Use the **SAVE** command after changing the settings to store them. The new settings will be taken into use when the transmitter is reset or powered up.

Examples

```
>seri
Baud P D S      : 19200 N 8 1
>
```

```
>seri 9600 e 7 1
Baud rate           : 9600
Parity              : E
Data bits           : 7
Stop bits           : 1
>save
Saving settings...done
>
```

Table 23 ECHO command

Syntax	Description
echo [on] [off]<cr>	To show or set the terminal echo status, use the **echo** command.

Examples:

```
>echo
COM1 Echo                : OFF
>
```

```
>echo on
COM1 Echo                : ON
```

Table 24 SMODE command

Syntax	Description
smode [stop/run]<cr>	Use the **smode** command to show or set the serial interface mode. Note that a separate **save** command is not needed to store the new serial interface mode setting. STOP mode — outputting only when command is issued, any command can be used. RUN mode — outputting automatically, only command **S** can be used.

Example:
`>smode stop`
`Output mode : STOP`
`>`	

4.10 Measurement parameter configuration commands

Table 25 ENV command

Syntax	Description
env [x.xxxx]<cr> where x.xxxx — Absolute pressure in the measuring environment. The default is **1.013**. The pressure unit is bar.	Use the **env** command to show or set the environmental compensation values. In HMT130, the humidity measurement can be compensated for ambient pressure. The value set with the **env** command is a permanent value which remains in use after a restart.

Syntax	Description
Examples:	

```
>env
Pressure (bar)      : 1.013
>
```

```
>env 0.980
Pressure (bar)      : 0.98
>save
Saving settings...done
>
```

You can use the Vaisala Humidity Calculator to simulate the effect of pressure change to dew point. The Humidity Calculator is available at:

www.vaisala.com/humiditycalculator

4.11 Analog output configuration commands

Table 26 AMODE command

Syntax	Description
amode [CH1mode CH2mode] [CH1lowlimit CH1highlimit] [CH2lowlimit CH2highlimit]<cr> where CH1mode / CH2mode: 0_5V (Output scale 0 ... 5V); 0_10V (Output scale 0 ... 10V); X_YV (Output scale lowlimit ... highlimit) CH1lowlimit / CH2lowlimit: Low limit for output voltage CH1highlimit / CH2highlimit: High limit for output voltage	Use the **amode** command to show or set the analog output mode

Example: Channel 1 limits configured as 1 ... 6 volts and Channel 2 as 0 ... 5 volts

```
>amode x_yv 0_5V 1 6
Ch1 Analog out mode : X_YV
Ch2 Analog out mode : 0_5V
Ch1 low limit       : 1
Ch1 high limit      : 6
>
```

Syntax	Description

Example: User prompted to accept currently used channel limits or enter new limits
`>amode x_yv`
`Ch1 Analog out mode : X_YV`
`Ch2 Analog out mode : 0_10V ?`
`Ch1 low limit : 0 ?`
`Ch1 high limit : 10 ? 1`
`>`	

Table 27 AERR command

Syntax	Description
`aerr [level1 level2]<cr>` where level 1 level 2 Error levels for analog output channel	Use the **`aerr`** command to show or set the analog output error levels.

Examples:
`>aerr`
`Ch1 Error level : 3.6`
`Ch2 Error level : 3.6`
`>`
 	
`>aerr 3.85 3.86`
`Ch1 Error level : 3.85`
`Ch2 Error level : 3.86`
`>`	

Table 28 ASEL command

Syntax	Description
`asel [q1 q2] [lo1 hi1 lo2 hi2]<cr>` where q1 q2 Analog output channel parameters [1)] lo1 lo2 Low limits of scaling hi1 hi2 High limits of scaling Syntax for single-parameter transmitters: **`asel [q] [lo hi]<cr>`** where q Analog output channel parameter lo Low limit of scaling hi High limit of scaling	After you have defined the measurement parameters with the **calcs** command, use the **asel** command to show or set the parameter output by the analog channels, and the scaling that is used. If you do not enter scaling limits, default values are used. Valid parameters are: **RH**, **T**, **TD**, **TDF**, **A**, **X**, **H**, **TW**, **PWS**, **PW**, and **NONE**. The **NONE** parameter disables analog output and output is forced to error level.

Syntax	Description
Examples:	

```
>asel
Ch1 Quantity        : RH
RH lo               : 0
RH hi               : 100
Ch2 Quantity        : T
T lo                : -60
T hi                : 100
>
```

```
>asel rh td
Ch1 Quantity        : RH
RH lo               : 0
RH hi               : 100
Ch2 Quantity        : TD
T lo                : -40
T hi                : 60
>
```

```
>asel t td 0 60 -20 60
Ch1 Quantity        : T
T lo                : 0
T hi                : 60
Ch2 Quantity        : TD
Td lo               : -20
Td hi               : 60
>
```

```
>asel rh none
Ch1 Quantity        : RH
RH lo               : 0
RH hi               : 100
Ch2 Quantity        : NONE
>
```

```
>asel none none
Ch1 Quantity        : NONE
Ch2 Quantity        : NONE
>
```

1) *Measurement parameters are referred to as 'quantities' in the transmitter's software.*

Table 29 ATEST command

Syntax	Description
`atest [val1 val2]<cr>` where val1 val2 Analog channel output value (V)	Use the **atest** command to test the analog outputs. The **atest** command will force the output to the given value, which can then be measured with a calibrated multimeter. The **atest** command affects only the analog outputs and hence it does not disable measurement functions. **atest** without parameters will exit the test mode and let the measurement continue. It will also indicate the current analog output levels in normal measurement state

Examples:

```
>atest
CH1: 2.360000
CH2: 3.765010
>
```

```
>atest 5.0 5.0
CH1: 5.000000
CH2: 5.000000
>
```

4.12 Relay output configuration

Table 30 RSEL command

Syntax	Description
`rsel [q]<cr>` where q Parameter to define relay state. [1)]	After you have defined the measurement parameters with the **calcs** command, use the **rsel** command to show or set the relay parameter. Valid parameters are **RH**, **T**, **TD**, **TDF**, **A**, **X**, **H**, **TW**, **PWS**, and **PW**.

Example:

```
>RSEL T
Relay quantity      : T
>
```

1) *Measurement parameters are referred to as 'quantities' in the transmitter's software.*

Table 31 RMODE command

Syntax	Description
`rmode [xxxx] [lo] [hi]<cr>` where *xxxx* **OFF**, **LO_OPEN** or **HI_OPEN** lo Low limit hi High limit	Use the **rmode** command to set/show relay mode, low and high limits. Relay modes are **OFF**, **LO_OPEN** and **HI_OPEN**. Low and high values specify relay operation limits for the selected measurement parameter. • In **OFF** mode: relay contacts are always open • In **LO_OPEN** mode: relay contacts are opened when the value is below the set low limit and closed when value is above the high limit. • In **HI_OPEN** mode: relay contacts are opened when the value is above the set high limit and closed when value is below the low limit.

Example:

```
>RMODE LO_OPEN 10 20
Relay mode          : LO_OPEN
Relay low           : 10
Relay high          : 20
>
```

Table 32 ROUT command

Syntax	Description
`rout<cr>`	Use the **rout** command to show the current relay settings.

Example:

```
>ROUT
*** RELAY OUTPUT ***
Relay quantity     : RH
RH                 : 22.35 %
Relay mode         : LO_OPEN
Relay low          : 10
Relay high         : 20
Relay status       : CLOSED
>
```

4.13 Other commands

Table 33 DSEL command

Syntax	Description
dsel [q1 q2]<cr> where q1 q2 Measurement parameters to be shown on the transmitter display [1)] Syntax for single-parameter transmitters: **dsel [q]<cr>** where q Parameter to be shown on the transmitter display	After you have defined the measurement parameters with the **calcs** command, use the **dsel** command to show or set the displayed parameters. The number of parameters determines the display mode (that is, one or two rows). If one parameter is given, the display switches to one-row mode. If two parameters are given, the two-row mode is used. Valid parameters are: **RH**, **T**, **TD**, **TDF**, **A**, **X**, **H**, **TW**, **PWS**, and **PW**.

Examples:

```
>dsel
1. quantity        : RH
2. quantity        : T
>
```

```
>dsel rh t
1. quantity        : RH
2. quantity        : T
>
```

```
>dsel t
1. quantity        : T
>
```

1) *Measurement parameters are referred to as 'quantities' in the transmitter's software.*

Table 34 FORM command

Syntax	Description
`form <format><cr>` where **`format`** is a formatting string that consists of one of the following fields: “” String constant x.y Value length modifier. **x** is numbers before dot and **y** is numbers after dot. Ux Unit field length. U...U format is also supported. Q Measurement parameter name (for example, **rh**, **t**, or **td**) #t or \t Tabulator #r or \r Carriage return #n or \n Line feed (new line)	After you have defined the measurement parameters with the **calcs** command, use the **form** command to set the output format for the **send** and **r** commands. • Parameter must be after x.y and Ux modifiers. • There must be a space between parameters, **#r#n** or **\r\n** is not supported. • Max. string length is 80 characters. • If the **Ux** parameter is not used, unit is not displayed.

Syntax	Description
Examples:	

```
>form "RH= " 3.2 U2 rh #r #n
>send
RH= 32.16 %
>
```

```
>form "t=" 4.1 U3 t \t "rh=" 3.2 U2 rh \r \n
>send
t=  22.5 'C        rh= 29.12 %
>
```

```
>form "t=" 4.1 U3 t \t "rh=" rh \r \n
>send
t=  22.3 'C        rh=  29.5%
>
```

```
>form 3.2 UUU "RH=" rh \t "T=" t \r \n
>send
RH= 27.99  %       T= 23.34 'C
>
```

```
>form 3.3 rh " " t \r \n
>send
26.740  23.660
>
```

```
>form "->" "RH=" 3.2 U2 rh " " "T=" 3.1 U3 t #r #n
>send
->RH= 27.79 % T= 23.4 'C
>
```

Table 35 HELP command

Syntax	Description
help<cr>	Use the **help** command to display the list of available commands.

Table 36 ERRS command

Syntax	Description
errs<cr>	Use the **errs** command to display the currently active error codes. For troubleshooting active errors, see Error codes (page 71).

Syntax	Description
Example (no active errors):	

```
>errs
No errors.
>
```

Table 37 SAVE command

Syntax	Description
save<cr>	Use the **save** command to save changed settings to the transmitter FLASH memory. Most settings have to be saved or the changes are lost at the next reset or power down. The **smode** command saves the new serial mode immediately, and a separate **save** command is not needed. The probe calibration commands (**crh**, **ct**, **crhclr**, **ctclr**) store the parameters into the probe's memory automatically without a separate **save** command.
Example:	

```
>save
Saving settings...done
>
```

Table 38 RESTORE command

Syntax	Description
restore<cr>	Use the **restore** command to restore saved settings from transmitter FLASH memory to RAM. All unsaved changes will be lost.

```
>restore
Restoring default settings...done
>
```

Table 39 RESET command

Syntax	Description
reset<cr>	Use the **reset** command to reset the transmitter. Upon reset or power-up, the transmitter enters the serial mode that has been set with the **smode** command. After a reset, the configuration is loaded from FLASH memory. This configuration can be altered by saving different settings with the **save** command.

Example: Transmitter set to serial mode STOP, will output transmitter software version at reset
`>reset`
`HMT130 / 0.1.0.001`
`Type "help" for command list`
`>`	

Table 40 FRESTORE command

Syntax	Description
frestore<cr>	Use the **frestore** command to restore the factory settings to the transmitter. All user settings, including the user-performed calibration corrections, will be lost. The transmitter will revert back to the factory calibrated settings. Note that this only returns the factory settings of the transmitter and not of the interchangeable probe (see Table 18 (page 39) and Table 20 (page 41)).

Example:
`>frestore`
`Restoring factory defaults...done`
`>`	

Table 41 UNIT command

Syntax	Description
unit [metric/ non_metric]<cr>	Use the **unit** command to show or set the output unit (metric or non-metric).

Syntax	Description

Examples:
`>unit`
`Unit : METRIC`
`>`
 	
`>unit non_metric`
`Unit : NON_METRIC`
`>`	

4.14 User port (RS-485) commands

The RS-485 interface enables communication between RS-485 network and HMT130 transmitter. The RS-485 interface is not isolated.

Set the RS-485 interface by using the commands listed in this section. Other serial line commands are presented in List of serial commands (page 31).

Table 42 SERI command

seri [b p d s]<cr> where b bit rate (1200, 2400, 4800, 9600, 19200, 38400, 57600, 115200) p parity (n = none, e = even, o = odd) d data bits (7 or 8) s stop bits (1 or 2)	Use the **seri** command to input RS-485 bus settings. This command affects the serial port where the settings are given (service port or user port).

Table 43 SERI2 command

seri2 [b p d s]<cr> where b bit rate (1200, 2400, 4800, 9600, 19200, 38400, 57600, 115200) p parity (n = none, e = even, o = odd) d data bits (7 or 8) s stop bits (1 or 2)	The **seri2** command is equivalent to the **seri** command, but it affects only the user port settings. The main purpose of the command is to change the user port settings via the service port.

Table 44 ECHO command

Syntax	Description
`echo [x]<cr>` where x **ON** or **OFF** (default=**OFF**)	Use the **echo** command to enable/disable echo of characters received over the serial line. When using a 2-wire connection, echo must be always disabled (**OFF**).

Table 45 SMODE command

`smode [xxxx]<cr>` where xxxx **STOP**,**RUN** or **POLL** • **STOP**: measurements are output only when the **send** command is given, all commands can be used • **RUN**: measurements are output automatically, only the **s** command can be used to stop the output • **POLL**: measurements are output only when the **send** [addr] command is given specifying a polled transmitter's address	Use the **smode** command to set the default serial interface mode. When several transmitters are connected to the same line, each transmitter must be entered an own address in the initial configuration, and **POLL** mode must be used.

Table 46 SDELAY command

Syntax	Description
`sdelay [delay]<cr>` where delay RS-485 turnaround time in milliseconds, range 0 ... 1000 ms.	Use the **sdelay** command to set the answer delay (RS-485 turnaround time) for the User Port.

Example:

```
>sdelay 100
Turnaround time     : 100
>
```

Table 47 INTV command

Syntax	Description
`intv [n xxx]<cr>` where n 1 ... 255 xxx **S**, **MIN** or **H**	Use the **intv** command to set the **RUN** mode output interval. The time interval is used only when the **RUN** mode is active. Setting the **RUN** output interval to zero enables the fastest possible output rate.

Example: set output interval to 10 min:
`>intv 10 min`
`Output intrv. : 10 min`
`>`	

Table 48 ADDR command

Syntax	Description
`addr [aa]<cr>` where aa address (0 ... 99) (default = 0)	Use the **addr** command to view or input the RS-485 transmitter address. Addresses are required only for **POLL** mode (see Table 24 (page 43).

Example: Configure the transmitter to use address **99** (after the **?**prompt)
`>addr`
`Address : 2 ? 99`
`>`	

Table 49 SEND command

Syntax	Description
`send [aa]<cr>` where aa address of the transmitter (set with the **addr** command)	Use the **send** command to output the reading once in **POLL** mode.

Table 50 OPEN command

Syntax	Description
open [aa]<cr> where aa address of the transmitter (set with the **addr** command)	When all transmitters on the RS-485 bus are in **POLL** mode, the **open** command sets one transmitter temporarily to **STOP** mode so that other commands can be entered.

Table 51 CLOSE command

Syntax	Description
close<cr>	The **close** command switches the transmitter back to the POLL mode.

Example:

```
>OPEN 2      // (opens the line to transmitter 2, other transmitters stay in
POLL mode)
>CRH      // (for example, calibration performed)
...
>CLOSE      // (line closed)
```

5. Maintenance

5.1 Removing and fastening fixed probe

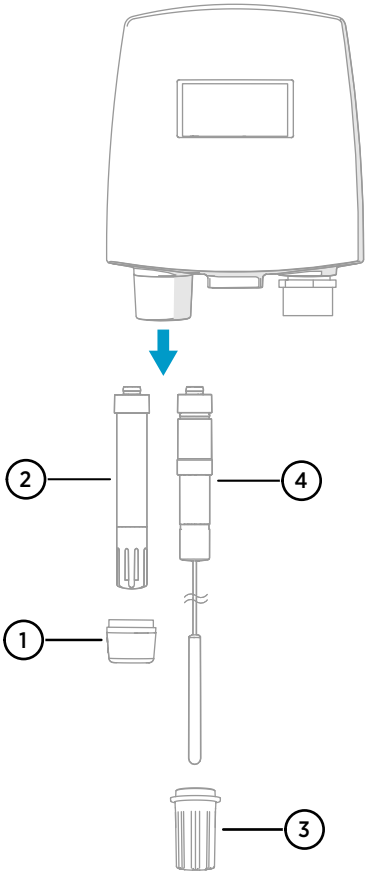

Figure 13 Removing the probe (fixed probe model)

1 Locking bushing
2 HMP110, HMP110T or HMP113 probe (HMP113 shown)
3 Probe nut
4 TMP115 probe

To remove or replace the probe:

1. Loosen the part that locks the probe in place by carefully turning it counterclockwise.
   - HMP110(T) and HMP113 probes are locked in place by a metal locking bushing (number 1 in the figure).
   - TMP115 probes are locked in place by a plastic probe nut (number 3 in the figure).

2. Remove the probe from the transmitter by pulling it gently downwards.
3. Verify the orientation of the connector pins and push the new probe to the 4-pin M8 panel connector of the transmitter (only one position possible).
4. Secure the probe by turning the locking bushing (for HMP110(T) and HMP113 probes) or probe nut (for TMP115 probe) clockwise.

5.2 Removing and fastening remote probe

To remove or replace the probe:

1. Unscrew the locking ring that secures the probe in place at the end of the probe connection cable and pull out the probe.
2. Replace the probe and screw the locking ring back on, securing the probe tightly in place.

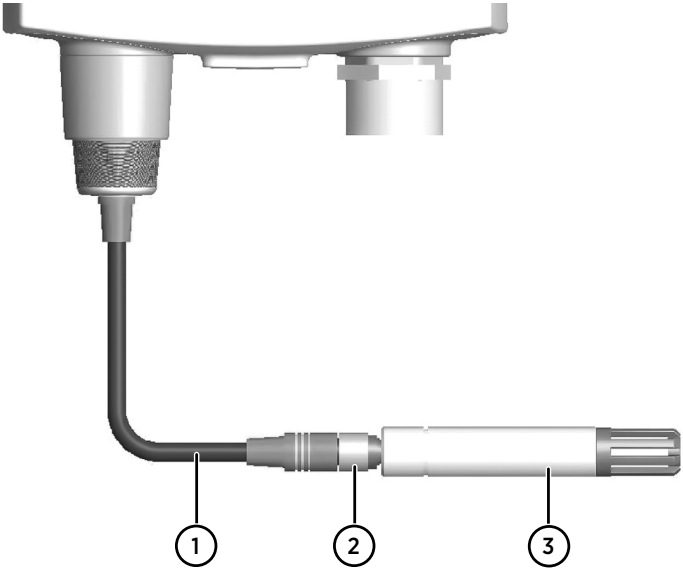

Figure 14 Removing the probe (remote probe model)

1 Probe connection cable
2 Locking ring securing the probe to the cable
3 Probe

5.3 Testing analog outputs

The transmitter has a built-in software function for testing analog outputs. To test the outputs:

1. Make sure the transmitter is not in adjustment mode (see Calibration and adjustment overview (page 62)).
2. Press the **+** adjustment button (see Figure 11 (page 25)).

   This sets the output voltage level to the high point of the analog output range (for example 10 V). The output stays at this level for about 30 seconds after the **+** adjustment button has been pressed.
3. Press the **-** adjustment button.

   This sets the output voltage level to the low point of the analog output range (for example 0 V). The output stays at this level for about 30 seconds after the **-** adjustment button has been pressed.

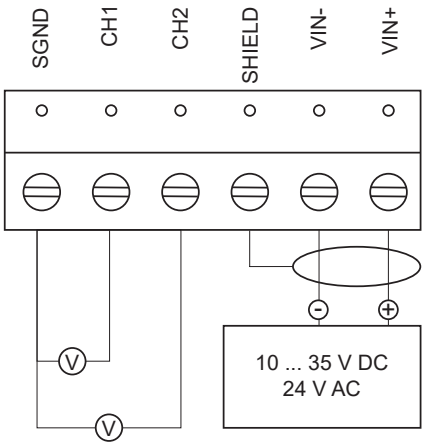

Figure 15 HMT130 output voltage measurement

If your transmitter has the optional display, the following texts are shown on the display the during analog output test:
- **Analog output test high**: analog output set to upper limit
- **Analog output test low**: analog output set to low limit

5.4 Replacing the HUMICAP sensor

To replace the HUMICAP® humidity sensor on a fixed or remote probe:

1. Remove the filter (plastic grid or sintered stainless steel).

2. Remove the damaged sensor and insert a new one.
3. Recalibrate the probe.
4. If the filter is dirty, replace it to ensure maximum lifetime and fast sensor response. Do not attempt to clean the filter.

More information

- Calibration and adjustment overview (page 62)

6. Calibration and adjustment

6.1 Calibration and adjustment overview

You can calibrate and adjust the transmitter using the following tools:

- Push buttons on the transmitter component board
- Serial line commands
- Portable humidity meter HM70

A calibrator kit is needed for calibration against saturated salt solutions. The HMK15 Humidity Calibrator and pre-measured certified salts are available from Vaisala. For further information, please contact your Vaisala representative.

Vaisala Service Centers also offer accredited calibrations for humidity and temperature.

You can also remove the HMP110 series probe and replace it with a new one. The old probe can be adjusted using another transmitter body, if you have one available.

RH field calibration and adjustment, as instructed in this document, is restricted to a certain adjustment range to minimize the effects of special circumstances, such as chemical contamination. In case the probe is outside its adjustment/trim range due to, for example, chemical exposure, the calibration cannot be completed. In this case, it is recommended that you change the probe or contact Vaisala technical support.

More information

- Calibration commands (page 38)
- Push-button calibration (page 62)
- Adjusting RH and T with MI70 handheld indicator (page 66)

6.2 Push-button calibration

You can calibrate and adjust the transmitter with the adjustment buttons on the transmitter component board.

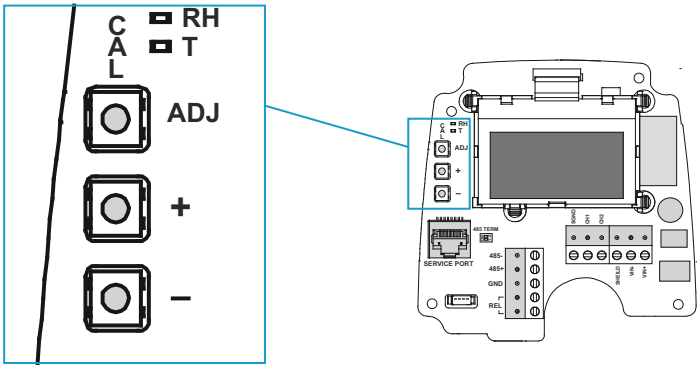

Figure 16 Adjustment buttons

HMT transmitters with a humidity and temperature probe: The 2-point humidity adjustment is carried out by using two relative humidity references: for example, saturated salt points 11 %RH (LiCl) and 75 %RH (NaCl). The difference between the two humidity reference points must be at least 30 %RH. The difference between the two temperature reference points must be at least 30 °C (86 °F).

> In push-button calibration of HMT transmitters, the transmitter outputs are by default relative humidity in the range 0 ... 100 %RH in CH1 and temperature in the range −40 ... +80 °C (−40 ... +176 °F) in CH2 regardless what the actual transmitter settings are. Outputs mean in this case both the display and analog current outputs.

TMT transmitters with a temperature-only probe: You can only calibrate temperature.

> With TMT transmitters, the push button calibration is only available in the range −40 ... +80 °C (−40 ... +176 °F) in CH1. For other ranges, use other calibration methods, such as serial commands. You can also calibrate the probe connected to the transmitter. For more information, see the probe user guide at docs.vaisala.com.

6.2.1 Adjusting humidity and temperature with push buttons

The instructions below apply to both 1-point and 2-point calibration.

To make a humidity or temperature adjustment:

1. Open the transmitter cover. There are 3 buttons marked **ADJ**, **+** and **-** on the component board. There are also two indicator LEDs, one green and one red.

2. Press the **ADJ** button and hold it down until the green indicator LED begins to blink slowly (800ms cycle time).
3. The transmitter is now in RH calibration state. Analog output and optional display will still follow the actual measured RH value.

> If you do not wish to perform the RH adjustment at this time, press the **ADJ** button one more time. The green indicator LED turns off and the red indicator LED begins to blink slowly (800 ms cycle time) to indicate T calibration state. To calibrate T, follow the instructions starting from step 7.

4. Remove the filter and insert the probe into a measurement hole of the dry end reference chamber (for example, LiCl: 11 % RH) to do the low humidity offset adjustment.

> Do not touch the adjustment buttons before the conditions have stabilized. This takes approximately 30 minutes.

5. Press either the **-** or **+** button at least once, make sure that the U_{out} voltage is correct, adjust using the **-** and **+** buttons if needed, and press the **ADJ** button again. The green indicator LED begins to blink faster (400ms cycle time).

> If you do not wish to perform the 2-point RH adjustment at this time, press the **ADJ** button one more time. The green indicator LED turns off and the red indicator LED begins to blink slowly (800 ms cycle time) to indicate T calibration state. To calibrate T, follow the instructions starting from step 7.
> If 1-point calibration is done at more than 50 %RH, a gain adjustment is done instead of an offset adjustment.

6. Insert the probe into the high end reference chamber (for example, NaCl: 75 % RH chamber in the humidity calibrator HMK15) and do the high humidity gain adjustment by using the - and + buttons to make sure the U_{out} voltage is correct (you have to press either **-** or **+** at least once even if the value is correct). To finish the RH calibration, press the **ADJ** button. The green LED is now turned off and the red indicator LED begins to blink slowly (800 ms cycle time).
7. The transmitter is now in T calibration state. Analog output and optional display will still follow the actual measured T value.

> If you do not wish to perform the T adjustment at this time, press **ADJ** button one more time. The red indicator LED is turned off and the transmitter returns to normal mode. The calibration procedure is now finished.

8. Insert the probe into a known reference temperature (if Vaisala Humidity Calibrator HMK15 is not used) and let the temperature reading stabilize.

> Do not touch the adjustment buttons before the conditions have stabilized.

9. Using the **-** and **+** buttons, make the temperature offset adjustment by making sure the U_{out} voltage is correct (you have to press either **-** or **+** at least once even if the value is correct) and press the **ADJ** button. The red indicator LED begins to blink faster (400 ms cycle time).

> If you do not wish to perform the 2-point T adjustment at this time, press the **ADJ** button one more time. The red indicator LED is turned off and the transmitter returns to normal mode. The calibration procedure is now finished.

10. Insert the probe into another reference temperature.

> Do not touch the adjustment buttons before the conditions have stabilized.

11. Using the **-** and **+** buttons, make the temperature gain adjustment by making sure the U_{out} voltage is correct (you have to press either **-** or **+** at least once even if the value is correct).
12. Press the **ADJ** button one more time. The red indicator LED turns off and the transmitter returns to normal mode. The calibration procedure is now finished.

> In case of calibration error, both LEDs blink alternately at a very fast rate (cycle time 200 ms) for a period of 2 s after which the transmitter returns to normal mode.

> If your transmitter has the optional display, the following notifications are shown on the display during calibration:
> - **Probe cal: RH 1** (corresponding the green LED blinking slowly)
> - **Probe cal: RH 2** (corresponding the green LED blinking fast)
> - **Probe cal: T1** (corresponding the red LED blinking slowly)
> - **Probe cal: T2** (corresponding the red LED blinking fast)
> - **Probe cal: Error** (corresponding both LEDs blinking alternately at very fast rate)

6.3 Adjusting RH and T with MI70 handheld indicator

- MI70 handheld indicator (included in, for example, the HM70 package)
- MI70 connection cable (Vaisala item code 211339)

You can check and adjust the transmitter's relative humidity and temperature measurement with the MI70 handheld indicator, which is included in the HM70 handheld humidity and temperature meter.

There are four types of adjustments available:
- Field checking and adjustment using a calibrated reference probe
- 1-point adjustment using a calibrator
- 2-point adjustment using a calibrator
- LiCl-NaCl adjustment

Start the adjustment by completing the first 7 steps and then continue according to the chosen adjustment method.

1. Connect the HM70 connection cable (211339) to the **SERVICE PORT** connector on the transmitter's component board (see Figure 11 (page 25)).
2. Connect the other end of the connection cable to either of the MI70 connector ports (port I or port II) located on the bottom of the indicator.

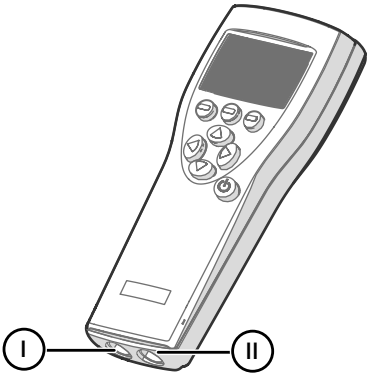

3. Turn on both devices (or just the MI70 indicator if the transmitter is on continuously).
4. The reading of the transmitter is shown on the top or middle row of the indicator display, depending on which connector port the connection cable is connected to.

5. Press the **ADJ** button on the transmitter's component board to open the adjustment mode. Both LEDs on the component board remain in **OFF** state and the text **Starting adjustment mode for HMP110** is shown on the MI70 display.

> In transmitters with the optional display, the text **MI70 adjustment mode** is shown on the upper row of the display.

> From this point onward, the transmitter's local adjustment buttons are disabled and adjustment is carried out using the MI70 indicator. The transmitter display and analog outputs will always follow the actual measured RH/T value when in MI70 adjustment mode. When operating the MI70, do not press the buttons too quickly or the calibration may fail. Wait for one second between each press.

6. Press **OK** to start the adjustment.
7. Check the environment settings if needed. Otherwise, press **NO**. Select **RH adjustment** or **T adjustment**.
8. Continue according to the instructions for one of the following adjustment methods:
   - Field checking and adjustment using a calibrated reference probe (page 67)
   - 1-point adjustment using a calibrator (page 68)
   - 2-point adjustment using a calibrator (page 68)
   - LiCl-NaCl adjustment (page 69)
   - Temperature field check and adjustment using a calibrated reference probe (page 70)

6.3.1 Field checking and adjustment using a calibrated reference probe

> Complete the steps listed in Adjusting RH and T with MI70 handheld indicator (page 66) before continuing with this adjustment option.

1. Check that the probes are located in equal conditions and wait until the readings have stabilized (can take 30 minutes or more). If you are close to the probes, do not breathe in their direction.
2. Press **ADJUST** to continue adjusting.
3. Choose **To same as RHI/II** from the MI70 adjustment menu and press **SELECT**. MI70 automatically recognizes which port the HMP70 series probe is connected to.
4. Press **YES** to confirm the adjustment.
5. Turn off the MI70 and detach the connection cable.

6.3.2 1-point adjustment using a calibrator

Complete the steps listed in Adjusting RH and T with MI70 handheld indicator (page 66) before continuing with this adjustment option.

1. Remove the filter from the transmitter's probe and insert the probe head into the reference condition.
2. Press **ADJUST** to continue adjusting.
3. Choose **1-point adjustment** from the MI70 adjustment menu and press **SELECT**.

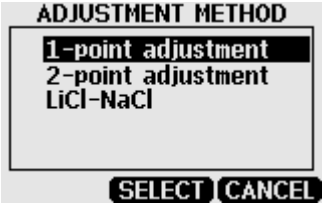

4. Press **READY** when the reading has stabilized in the reference condition (can take 30 minutes or more). You can follow the stabilization from the **GRAPH** display.

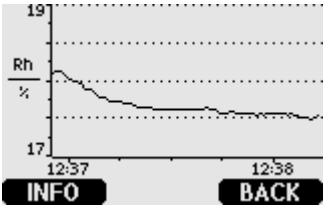

5. Enter the correct reference value with the arrow buttons and press **OK**.
6. Confirm the adjustment by pressing **YES**.
7. The adjustment is done. Press **BACK** and **EXIT** to return to the basic display.
8. Turn off the MI70 and detach the connection cable.

6.3.3 2-point adjustment using a calibrator

Complete the steps listed in Adjusting RH and T with MI70 handheld indicator (page 66) before continuing with this adjustment option.

1. Remove the filter from the transmitter's probe and insert the probe head into the lower reference condition.

2. Press **ADJUST** to continue adjusting.
3. Choose **2-point adjustment** from the MI70 adjustment menu and press **SELECT**.
4. Press **READY** when the reading has stabilized in the first reference condition (can take 30 minutes or more). You can follow the stabilization from the **GRAPH** display.
5. Enter the correct reference value of the first condition with the arrow buttons and press **OK**.
6. Remove the probe from the first reference condition and insert the probe head into the higher humidity reference condition.
7. Press **READY** when the reading has stabilized in the second reference condition (can take 30 minutes or more). You can follow the stabilization from the **GRAPH** display.
8. Enter the correct reference value of the second condition with the arrow buttons and press **OK**.
9. Confirm the adjustment by pressing **YES** (by pressing **NO** you return to adjustment mode display and no changes are made). If the difference between the two reference conditions is less than 50 %RH, adjustment cannot be done.
10. The adjustment is done. Press **BACK** and **EXIT** to return to the basic display.
11. Turn off the MI70 and detach the connection cable.

6.3.4 LiCl-NaCl adjustment

Complete the steps listed in Adjusting RH and T with MI70 handheld indicator (page 66) before continuing with this adjustment option.

1. Remove the filter from the transmitter's probe and insert the probe head into the LiCl salt chamber.
2. Press **ADJUST** to continue adjusting.
3. Choose **LiCl-NaCl autom.** from the MI70 adjustment menu and press **SELECT**. Press **OK** to accept the note telling about references.
4. Press **READY** when the reading has stabilized in the LiCl salt chamber (can take 30 minutes or more). You can follow the stabilization from the **GRAPH** display.
5. Remove the probe from the LiCl salt chamber and insert the probe head into the NaCl salt chamber.
6. Press **READY** when the reading has stabilized in the NaCl salt chamber (can take 30 minutes or more). You can follow the stabilization from the **GRAPH** display.
7. Confirm the adjustment by pressing **YES** (by pressing **NO** you return to adjustment mode display and no changes are made).
8. The adjustment is done. Press **BACK** and **EXIT** to return to the basic display.
9. Turn off the MI70 and detach the connection cable.

6.3.5 Temperature field check and adjustment using a calibrated reference probe

Complete the steps listed in Adjusting RH and T with MI70 handheld indicator (page 66) before continuing with this adjustment option.

1. Check that the probes are located in equal conditions and wait until the readings have stabilized (can take 30 minutes or more). If you are close to the probes, do not breathe in their direction.
2. Press **ADJUST** to continue adjusting.
3. Choose **To same as THI/II** from the MI70 adjustment menu and press **SELECT**. MI70 automatically recognizes which port the HMP70 series probe is connected to.
4. Press **YES** to confirm the adjustment.

   If the temperature difference between the reference probe and the transmitter is too large, the adjustment cannot be done (MI70 notifies you of this). The available reserve for T adjustment of the transmitter depends on the initial temperature calibration of the unit.

5. The adjustment is done. Press **BACK** and **EXIT** to return to the basic display.
6. Turn off the MI70 and detach the connection cable.

7. Troubleshooting

7.1 Error codes

The transmitter's software provides a variety of self diagnostics information, for example, FLASH and program memory checksum, probe communication status, probe checksum, operation voltage check, and oscillator fault check.

At startup, the transmitter's software checks the factory/user settings checksum, program memory checksum, and oscillator fault status. Other checks are made during runtime. Possible error codes are listed in Table 52 (page 71).

Table 52 Error codes, descriptions, and texts

Code	Description	Error text
1	Probe T measurement error	Probe T meas
2	Probe RH measurement error	Probe RA meas
3	Probe communication error	Probe communication
4	Probe checksum error	Probe checksum
5	Probe message form error	Probe message form
6	Program's flash checksum error	Program code checksum
7	Current settings checksum error (RAM)	Settings checksum
8	Factory FLASH not initialized	Factory defaults empty
9	User FLASH not initialized	User defaults empty
10	Voltage is too low to operate correctly	Voltage too low
11	Measurements not available	Measurements not available
12	Oscillator fault bit active	HW fault 1
13	Analog output quantity invalid [1)]	Analog output quantity invalid
14	Display quantity invalid	Display quantity invalid
15	Invalid relay setting	Relay quantity invalid

1) Measurement parameters are referred to as 'quantities' in the transmitter's software.

You can view the error text with the **errs** serial line command. If you are using a transmitter with the optional display, the error code is shown on the display in the following format: **ERR:Code-1[.Code-2][.Code-n]**. Multiple errors are separated by a period ("**.**") between the error codes.

7.2 Solving typical problems

You can check error messages with the **errs** serial line command. For a list of possible error messages, see Error codes (page 71). In case of constant error, contact Vaisala.

Table 53 Problems and solutions

Problem or message	Likely causes and solutions
Measurement not working, any of the following errors is active: • Probe RH measurement error • Probe T measurement error	• Sensor(s) damaged or missing. Open the probe filter and check. • Calibration is not done. Calibrate the probe. • Check the supply voltage of the transmitter.
Transmitter cannot communicate with the probe, any of the following errors is active: • Probe communication error • Probe checksum error • Probe message form error • Measurements not available	• Check the attachment of the probe to the transmitter. • In case of remote probe, check also the interconnection cables. • Replace the probe if necessary.
Serial line command not working, outputs **Unknown command**.	Mistyped or unknown command, check the command syntax and parameters.
Cannot connect to serial line, current serial settings of the module are unknown.	Perform the following steps to connect: 1. Set your terminal settings to **19200 8 N 1** (the default settings of the transmitter). 2. Connect to the service port of the transmitter. 3. Power up the transmitter, and type "**Z**" on the serial line at least five times. 4. The transmitter will come online with the default settings. 5. Use the **seri** serial line command to set the desired serial settings and save the settings with the **save** command.
Any of the following errors is active: • Current settings checksum error • Default settings checksum error	Internal error. Perform the following steps: 1. Reset or power cycle the module. Check if the error disappears. 2. Return the module to factory settings with the **frestore** serial line command. Check again. 3. If the error is still active, contact a Vaisala service center.
Any of the following errors is active: • Program checksum error • Factory flash defaults checksum error • Factory flash not initialized • Oscillator fault bit active	Faulty transmitter, contact a Vaisala service center.

Problem or message	Likely causes and solutions
Any of the following errors is active: • Analog output quantity invalid [1)] • Display quantity invalid	• In case of **Analog output quantity invalid** error, select the correct output quantities (set with the **calcs** command) with the **asel** command. • In case of **Display quantity invalid** error, select the correct display quantities with the **dsel** command.

1) Measurement parameters are referred to as 'quantities' in the transmitter's software.

7.3 Analog output error notification

If the transmitter is unable to operate due to an error, the analog outputs are set to an error level.

The default output voltage in error state in error state is 0 V.

The error voltage value can be changed using the serial interface (**aerr** serial line command): see Analog output configuration commands (page 44).

8. Technical data

8.1 HMT130 specifications

Table 54 HMT130 measurement performance

Property	Description/Value
Relative humidity	
Measurement range	0–100 %RH
Accuracy [1) 2)]	
At 0 ... +40 °C (+32 ... +104 °F)	±1.5 %RH (0–90 %RH) ±2.5 %RH (90–100 %RH)
With HMP110 probe: At −40 ... 0 °C and +40 ... +80 °C (−40 ... +32 °F and +104 ... +176 °F) With HMP113 probe: At −40 ... 0 °C and +40 ... +60 °C (−40 ... +32 °F and +104 ... +140 °F)	±3.0 %RH (0–90 %RH) ±4.0 %RH (90–100 %RH)
Factory calibration uncertainty at +20 °C (+68 °F)	±1.1 %RH (0–90 %RH) ±1.8 %RH (90–100 %RH)
Humidity sensor types	HUMICAP® 180R HUMICAP® 180V [3)]
Stability	±2 %RH over 2 years
Stability in typical HVAC applications	±0.5 %RH per year
Temperature	
Measurement range	HMP110: −40 ... +80 °C (−40 ... +176 °F) HMP113: −40 ... +60 °C (−40 ... +140 °F)
Temperature sensor	Pt1000 RTD Class F0.1 IEC 60751
Accuracy over temperature range:	
HMP110:	
At +15 ... +25 °C (+59 ... +77 °F)	±0.1 °C (±0.18 °F)
At 0 ... +15 °C and +25 ... +40 °C (+32 ... +59 °F and +77 ... +104 °F)	±0.15 °C (±0.27 °F)
At −40 ... +0 °C and +40 ... +80 °C (−40 ... +32 °F and +104 ... +176 °F)	±0.4 °C (±0.72 °F)

Property	Description/Value
HMP113:	
At 0... +40 °C (+32 ... +104 °F)	±0.2 °C (±0.36 °F)
At −40 ... 0 °C and +40 ... +60 °C (−40 ... +32 °F and +104 ... +140 °F)	±0.4 °C (±0.72 °F)
Other output parameters (optional)	
Dew point/frost point, wet bulb temperature, enthalpy, absolute humidity, mixing ratio, vapor pressure, saturation vapor pressure	

1) *Including non-linearity, hysteresis, and repeatability.*
2) *With HUMICAP® 180V sensor, accuracy is specified only in operating temperature −20 ... +80 °C (−4 ... +176 °F).*
3) *Not available with HMP113.*

Table 55 HMT130 operating environment

Property	Description/Value
IP rating (transmitter body)	IP65 [1)]
Operating temperature of transmitter body, no display	−40 ... +60 °C (−40 ... +140 °F)
Operating temperature of transmitter body with display	−20 ... +60 °C (−4 ... +140 °F)
Operating temperature, probe	HMP110: −40 ... +80 °C (−40 ... +176 °F) HMP113: −40 ... +60 °C (−40 ... +140 °F)
Storage temperature	−50 ... +70 °C (−58 ... +158 °F)

1) *IP65 for the HMP110 probe only when using stainless steel sintered filter (HM46670SP) or PTFE sintered filter (item code DRW244938SP).*

Table 56 HMT130 inputs and outputs

Property	Description/Value
HMT130 3-wire transmitter	
Voltage output signals	0–1 V, 0–5 V, 0–10 V or user-defined between 0–10 V
Min. output resistance	1 kΩ
Serial output	RS-485, non-isolated
Relay output	1 relay (max. 50 V DC, 200 mA)

Property	Description/Value
Supply voltage	10–35 V DC 15–35 V DC (when output 0–10 V) 24 V AC (±20 %)
Current consumption at 24 V DC	8 mA, if relay closed 15 mA
Max. additional error caused by the analog outputs after calibration at +20 °C (+68 °F) ambient temperature	±0.1 % of FS output signal
Temperature dependence of the analog outputs	±0.005 % of FS output signal

Table 57 HMT130 mechanical specifications

Property	Description/Value
Weight	270 g (9.5 oz)
Probe connection cable lengths	3 m, 5 m, 10 m - up to 50 m (9.8 ft, 16 ft, 33 ft - up to 164 ft)
Display (optional)	128 × 64 resolution full graphics B&W display without backlight
Material	
Transmitter housing	PBT plastic
Display window	PC plastic
Probe body	HMP110: Stainless steel (AISI 316) HMP113: PC/ABS blend
Probe grid filter	HMP110: Chrome coated ABS plastic HMP113: PC (glass reinforced)
Connections	
Inputs and outputs	Screw terminals 0.5–1.5 mm^2 (AWG 20–AWG 15)
Probe interface	4-pin M8 female panel connector

8.2 TMT130 specifications

Table 58 TMT130 measurement performance

Property	Description/Value
Temperature	

Property	Description/Value
Measurement range	HMP110T: −40 ... +80 °C (−40 ... +176 °F) TMP115: −196 ... +150 °C (−320 ... +302 °F)
Temperature sensor	Pt1000 RTD Class F0.1 IEC 60751
Accuracy over temperature range:	
HMP110T:	
At +15 ... +25 °C (+59 ... +77 °F)	±0.1 °C (±0.18 °F)
At 0 ... +15 °C and +25 ... +40 °C (+32 ... +59 °F and +77 ... +104 °F)	±0.15 °C (±0.27 °F)
At −40 ... +0 °C and +40 ... +80 °C (−40 ... +32 °F and +104 ... +176 °F)	±0.4 °C (±0.72 °F)
TMP115:	
at −196 ... −90 °C (−320 ... −130 °F)	±2.5 °C (±4.5 °F)
at −90 ... −30 °C (−130 ... −22 °F)	±0.75 °C (±1.35 °F)
at −30 ... 0 °C (−22 ... +32 °F)	±0.5 °C (±0.9 °F)
at 0 ... +50 °C (+32 ... +122 °F)	±0.25 °C (±0.45 °F)
at +50 ... +90 °C (+122 ... +194 °F)	±0.75 °C (±1.35 °F)
at +90 ... +150 °C (+194 ... +302 °F)	±2.5 °C (±4.5 °F)

Table 59 TMT130 operating environment

Property	Description/Value
IP rating (transmitter body)	IP65 [1)]
Operating temperature of transmitter body, no display	−40 ... +60 °C (−40 ... +140 °F)
Operating temperature of transmitter body with display	−20 ... +60 °C (−4 ... +140 °F)
Operating temperature, probe	HMP110T: −40 ... +80 °C (−40 ... +176 °F) TMP115, sensor tip: −196 ... +150 °C (−320 ... +302 °F) TMP115, probe body: −40 ... +60 °C (−40 ... +140 °F)
Storage temperature	−50 ... +70 °C (−58 ... +158 °F)

1) *IP65 for the HMP110T probe only when using stainless steel sintered filter (HM46670SP) or PTFE sintered filter (item code DRW244938SP).*

Table 60 TMT130 inputs and outputs

Property	Description/Value
TMT130 3-wire transmitter	
Voltage output signals	0–1 V, 0–5 V, 0–10 V or user-defined between 0–10 V
Min. output resistance	1 kΩ
Serial output	RS-485, non-isolated
Relay output	1 relay (max. 50 V DC, 200 mA)
Supply voltage	10–35 V DC 15–35 V DC (when output 0–10 V) 24 V AC (±20 %)
Current consumption at 24 V DC	8 mA, if relay closed 15 mA
Max. additional error caused by the analog outputs after calibration at +20 °C (+68 °F) ambient temperature	±0.1 % of FS output signal
Temperature dependence of the analog outputs	±0.005 % of FS output signal

Table 61 TMT130 mechanical specifications

Property	Description/Value
Weight	270 g (9.5 oz)
Probe connection cable lengths	3 m, 5 m, 10 m - up to 50 m (9.8 ft, 16 ft, 33 ft - up to 164 ft)
Display (optional)	128 × 64 resolution full graphics B&W display without backlight
Material	
Transmitter housing	PBT plastic
Display window	PC plastic
HMP110T probe body	Stainless steel (AISI 316)
HMP110T probe grid filter	Chrome coated ABS plastic
TMP115 probe body	PC/ABS blend
TMP115 probe cable	FEP
TMP115 sensor tip	Stainless steel (AISI 316)
Connections	

Property	Description/Value
Inputs and outputs	Screw terminals 0.5–1.5 mm^2 (AWG 20–AWG 15)
Probe interface	4-pin M8 female panel connector

8.3 Spare parts and accessories

Information on spare parts, accessories, and calibration products is available online at vaisala.com and store.vaisala.com.

Table 62 HMT130 spare parts and accessories

Description	Item code
Probes [1)]	
Humidity and temperature probe	HMP110
Constant output probe	HMP110REF
Humidity and temperature probe	HMP113
Sensors	
HMP110 and HMP113 probes:	
Standard humidity sensor	HUMICAP180R
Catalytic humidity sensor for H_2O_2	HUMICAP180V [2)]
Sensor protection	
HMP110 probe:	
Plastic grid filter	DRW010522SP
Plastic grid with membrane filter	DRW010525SP
Stainless steel sintered filter	HM46670SP
PTFE membrane filter with stainless steel grid	ASM212652SP
PTFE sintered filter	DRW244938SP
HMP113 probe:	
Plastic grid filter	DRW240185SP
Plastic grid with membrane filter	ASM210856SP
Stainless steel sintered filter	HM47280SP
Porous PTFE filter	219452SP

Description	Item code
Probe installation	
HMP110 and HMP113 (remote probe models):	
Probe mounting clamp, 1 pc	225501
Probe mounting clamps, 10 pcs	226067
Probe mounting flange	226061
Probe holder, 5 pcs	ASM213382SP
Probe connection cables [3)]	
Probe connection cable 3 m (9.8 ft)	HMT120Z300
Probe connection cable 5 m (16 ft)	HMT120Z500
Probe connection cable 10 m (33 ft)	HMT120Z1000
Probe connection cable 20 m (66 ft)	HMT120Z2000
Probe connection cable 5 m (16 ft), plenum-rated	HMT120Z500CMP
Probe connection cable 10 m (33 ft), plenum-rated	HMT120Z1000CMP
Probe connection cable 20 m (66 ft), plenum-rated	HMT120Z2000CMP
Other cables	
HM70 connection cable	211339
USB serial interface cable	219685
Transmitter protection and installation	
Radiation shield [3)]	DTR504A
Rain shield with installation kit	215109
Duct installation kit [3)]	215619

1) *See the separate HMP110 and HMP113 order forms.*
2) *Not available with HMP113.*
3) *For use with remote probe models.*

Table 63 TMT130 spare parts and accessories

Description	Item code
Probes [1)]	
Temperature-only probe	HMP110T

Description	Item code
Wide-range temperature probe	TMP115 with a 3 m (9.8 ft) cable [2)]
Sensor protection	
HMP110T probe:	
Plastic grid filter	DRW010522SP
Plastic grid with membrane filter	DRW010525SP
Stainless steel sintered filter	HM46670SP
PTFE membrane filter with stainless steel grid	ASM212652SP
PTFE sintered filter	DRW244938SP
Probe installation	
Remote probe models with HMP110T:	
Probe mounting clamp, 1 pc	225501
Probe mounting clamps, 10 pcs	226067
Probe mounting flange	226061
Probe holder, 5 pcs	ASM213382SP
Fixed probe models with TMP115:	
Probe nut, 5 pcs	DRW257207SP
Thermal dampener block	236310SP
Probe connection cables [3)]	
Probe connection cable 3 m (9.8 ft)	HMT120Z300
Probe connection cable 5 m (16 ft)	HMT120Z500
Probe connection cable 10 m (33 ft)	HMT120Z1000
Probe connection cable 20 m (66 ft)	HMT120Z2000
Other cables	
HM70 connection cable	211339
USB serial interface cable	219685
Transmitter protection and installation	
Radiation shield [3)]	DTR504A
Rain shield with installation kit	215109
Duct installation kit [3)]	215619

1) See the separate HMP110 and TMP115 order forms.
2) Length includes the TMP115 probe body and sensor tip.

3) For use with remote probe models.

8.4 Transmitter dimensions

Fixed probe model dimensions are shown with HMP110 and TMP115 probes.

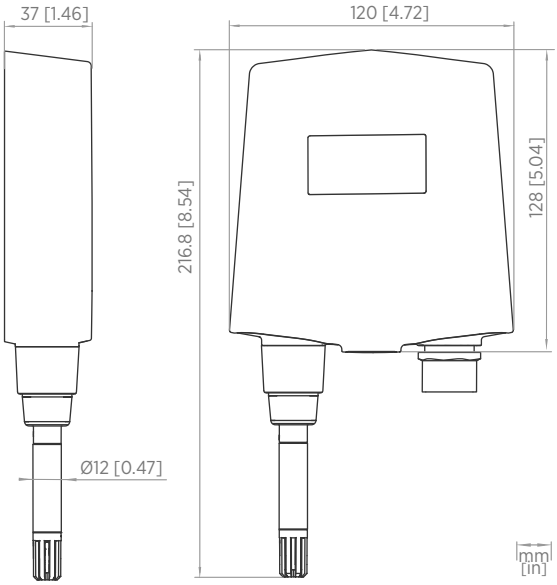

Figure 17 Fixed probe model dimensions in mm [in], with HMP110

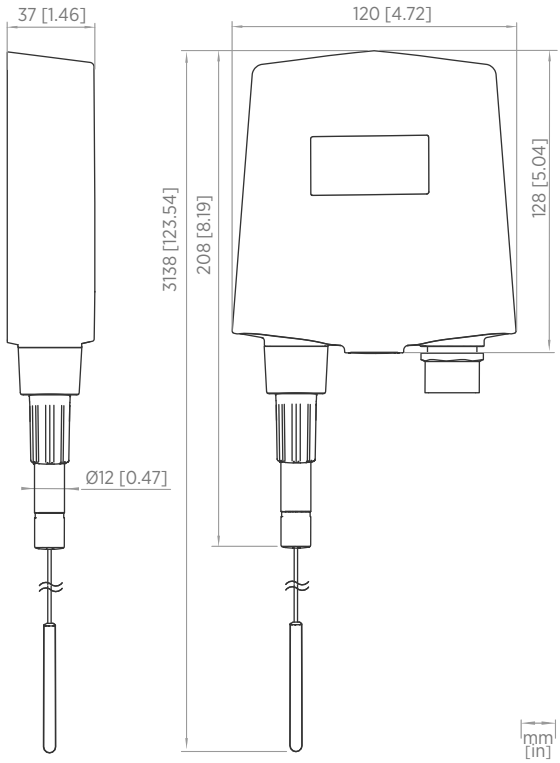

Figure 18 Fixed probe model dimensions in mm [in], with TMP115

Remote probe model dimensions are shown with HMP110.

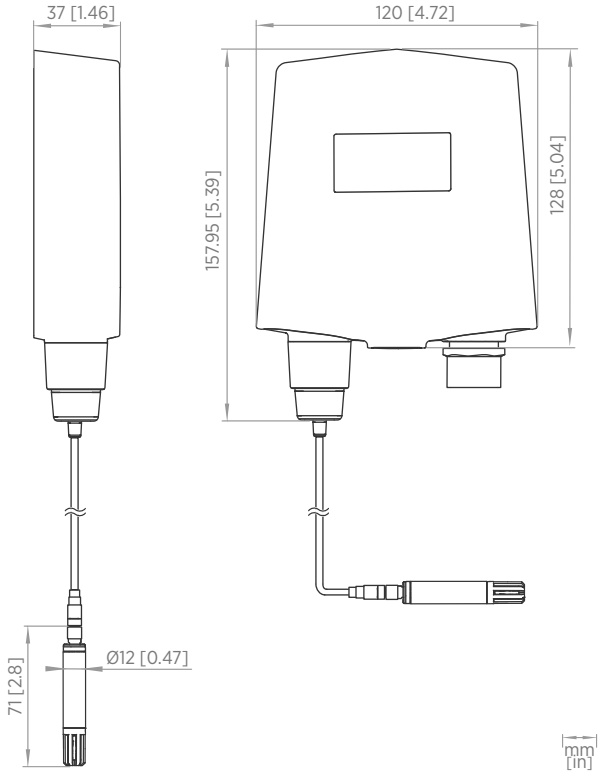

Figure 19 Remote probe model dimensions in mm [in], with HMP110

Appendix A. Calculation formulas

A.1 Calculation formulas overview

The transmitter receives the relative humidity and temperature values from the HMP110 probe. Based on these temperature and relative humidity values, the transmitter calculates dew point, frost point, absolute humidity, mixing ratio, enthalpy, wet bulb temperature, saturation vapor pressure and vapor pressure in normal pressure.

Symbols:

T_d	Dew point temperature (°C)
P_w	Water vapor pressure (hPa)
P_{ws}	Saturation vapor pressure (hPa)
RH	Relative humidity (%)
x	Mixing ratio (g/kg)
p	Atmospheric pressure (hPa)
a	Absolute humidity (g/m3)
T	Temperature (°C)
h	Enthalpy (kJ/kg)
T_w	Wet bulb temperature (°C)
T_{df}	Dew/frost point temperature (°C)

A.2 Dew point temperature

The dew point temperature (T_d) of a moist air sample is the temperature to which the sample must be cooled to reach saturation with respect to liquid water.

Dew point temperature (T_d) is calculated with the following formula:

$$T_d = \frac{\frac{Tn}{m}}{\log\left(\frac{Pw}{A}\right)} - 1 \qquad [°C]$$

Pw is the water vapor pressure (see the separate calculation formula for P_w). The parameters **A**, **m**, and **Tn** depend on the temperature as shown in Table 64 (page 85).

Table 64 Temperature dependence for A, m, and Tn

T	A	m	Tn
... 0 °C	6.119866	7.926104	250.4138
0 ... 50 °C	6.1078	7.5000	237.30
50 ... 100 °C	5.9987	7.3313	229.10

T	A	m	Tn
100 ... 150 °C	5.8493	7.2756	225.00
150 ... °C	6.2301	7.3033	230.00

A.3 Dew/frost point temperature calculation

Dew/frost point temperature (T_{df}) is calculated with the following formula:

$$T_d \geq 0 \rightarrow T_{df} = T_d$$

$$T_d < 0 \rightarrow T_{df} = \frac{\frac{Tn}{m}}{\log\left(\frac{Pw}{A}\right)} - 1 \qquad [°C]$$

Pw is the water vapor pressure (see the separate calculation formula for P_w). The parameters **A**, **m**, and **Tn** depend on the temperature as shown in Table 65 (page 86).

Table 65 Temperature dependence for A, m, and Tn

T	A	m	Tn
... 0 °C	6.1134	9.7911	273.47

A.4 Mixing ratio calculation

The mixing ratio (**x**, mass of water vapour/mass of dry gas) is calculated with the following formula:

$$x = B \times \frac{P_w}{p - P_w} \qquad [g/kg]$$

where

B 621.9907 g/kg

The value of B depends on the gas. 621.9907 g/kg is valid for air.

A.5 Saturation vapor pressure calculation

Saturation vapor pressure (P_{ws}) is the equilibrium water vapor pressure in a closed chamber containing liquid water. It is a function only of temperature, and it indicates the maximum amount of water that can exist in the vapor state.

Water vapor saturation pressure (P_{ws}) is calculated with the following 2 formulas:

$$\Theta = T - \sum_{i=0}^{3} C_i T^i \qquad [hPa]$$

where

T	Temperature in K
C_i	Coefficients
C_0	0.49313580
C_1	-0.46094296 * 10^{-2}
C_2	0.13746454 * 10^{-4}
C_3	-0.12743214 * 10^{-7}

$$\ln P_{ws} = T - \sum_{i=-1}^{3} b_i \Theta^i + b_4 \ln \Theta$$

where

b_i	Coefficients
b_{-1}	-0.58002206 * 10^{4}
b_0	0.13914993 * 10^{1}
b_1	-0.48640239 * 10^{-1}
b_2	0.41764768 * 10^{-4}
b_3	-0.14452093 * 10^{-7}
b_4	6.5459673

A.6 Water vapor pressure calculation

Vapor pressure refers to the vapor pressure of water in air or other gas. Water vapor has a partial pressure P_w which is part of the total pressure of the gas.

Water vapor pressure (**Pw**) is calculated with the following formula:

$$P_w = RH \cdot \frac{P_{ws}}{100} \qquad [hpa]$$

A.7 Absolute humidity calculation

Absolute humidity (**a**) is defined as the mass of water vapour in a certain volume. If ideal gas behaviour is assumed, the absolute humidity can be calculated using the following formula:

$$a = C \cdot \frac{P_w}{T + 273.15} \qquad \left[g/m^3\right]$$

where

C 216.679 gK/J

A.8 Enthalpy calculation

Enthalpy (**h**) can be calculated from the mixing ratio (**x**) using the following formula:

$$h = T \cdot (1.01 + 0.00189 \cdot x) + 2.5 \cdot x \qquad [kJ/kg]$$

A.9 Accuracies of calculated variables

Accuracies of the calculated variables depend on the calibration accuracy of the humidity and temperature sensors; here the accuracies are given for ±2 %RH and ±0.2 °C.

A.9.1 Accuracy of dew point temperature °C

Table 66 Accuracy of dew point temperature °C

	Relative humidity (%RH)									
Temp	**10**	**20**	**30**	**40**	**50**	**60**	**70**	**80**	**90**	**100**
-40 °C	1.86	1.03	0.76	0.63	0.55	0.50	0.46	0.43	—	—
-20 °C	2.18	1.19	0.88	0.72	0.62	0.56	0.51	0.48	—	—
0 °C	2.51	1.37	1.00	0.81	0.70	0.63	0.57	0.53	0.50	0.48
20 °C	2.87	1.56	1.13	0.92	0.79	0.70	0.64	0.59	0.55	0.53
40 °C	3.24	1.76	1.27	1.03	0.88	0.78	0.71	0.65	0.61	0.58
60 °C	3.60	1.96	1.42	1.14	0.97	0.86	0.78	0.72	0.67	0.64
80 °C	4.01	2.18	1.58	1.27	1.08	0.95	0.86	0.79	0.74	0.70
100 °C	4.42	2.41	1.74	1.40	1.19	1.05	0.95	0.87	0.81	0.76
120 °C	4.86	2.66	1.92	1.54	1.31	1.16	1.04	0.96	0.89	0.84
140 °C	5.31	2.91	2.10	1.69	1.44	1.26	1.14	1.05	0.97	0.91
160 °C	5.80	3.18	2.30	1.85	1.57	1.38	1.24	1.14	1.06	0.99

A.9.2 Accuracy of mixing ratio g/kg (ambient pressure 1013 mbar)

Table 67 Accuracy of mixing ratio g/kg (ambient pressure 1013 mbar)

	Relative humidity (%RH)									
Temp	**10**	**20**	**30**	**40**	**50**	**60**	**70**	**80**	**90**	**100**
-40 °C	0.003	0.003	0.003	0.003	0.003	0.004	0.004	0.004	—	—
-20 °C	0.017	0.018	0.019	0.021	0.022	0.023	0.025	0.026	—	—
0 °C	0.08	0.09	0.09	0.10	0.10	0.11	0.11	0.12	0.13	0.13
20 °C	0.31	0.33	0.35	0.37	0.39	0.41	0.43	0.45	0.47	0.49
40 °C	0.97	1.03	1.10	1.17	1.24	1.31	1.38	1.46	1.54	1.62
60 °C	2.68	2.91	3.16	3.43	3.72	4.04	4.38	4.75	5.15	5.58
80 °C	6.73	7.73	8.92	10.34	12.05	14.14	16.71	19.92	24.01	29.29
100 °C	16.26	21.34	28.89	40.75	60.86	98.85	183.66	438.56	—	—
120 °C	40.83	74.66	172.36	—	—	—	—	—	—	—

A.9.3 Accuracy of wet bulb temperature °C

Table 68 Accuracy of wet bulb temperature °C

	Relative humidity (%RH)									
Temp	**10**	**20**	**30**	**40**	**50**	**60**	**70**	**80**	**90**	**100**
-40 °C	0.20	0.20	0.20	0.20	0.20	0.20	0.20	0.20	—	—
-20 °C	0.21	0.21	0.22	0.22	0.22	0.22	0.23	0.23	—	—
0 °C	0.27	0.28	0.28	0.29	0.29	0.29	0.30	0.30	0.31	0.31
20 °C	0.45	0.45	0.45	0.44	0.44	0.44	0.43	0.43	0.42	0.42
40 °C	0.84	0.77	0.72	0.67	0.64	0.61	0.58	0.56	0.54	0.52
60 °C	1.45	1.20	1.03	0.91	0.83	0.76	0.71	0.67	0.63	0.60
80 °C	2.23	1.64	1.32	1.13	0.99	0.89	0.82	0.76	0.72	0.68
100 °C	3.06	2.04	1.58	1.31	1.14	1.01	0.92	0.85	0.80	0.75
120 °C	3.85	2.40	1.81	1.48	1.28	1.13	1.03	0.95	0.88	0.83
140 °C	4.57	2.73	2.03	1.65	1.41	1.25	1.13	1.04	0.97	0.91
160 °C	5.25	3.06	2.25	1.82	1.55	1.37	1.24	1.13	1.05	0.99

A.9.4 Accuracy of absolute humidity g/m^3

Table 69 Accuracy of absolute humidity g/m^3

	Relative humidity (%RH)									
Temp	**10**	**20**	**30**	**40**	**50**	**60**	**70**	**80**	**90**	**100**
-40 °C	0.004	0.004	0.005	0.005	0.005	0.006	0.006	0.006	--	-
-20 °C	0.023	0.025	0.027	0.029	0.031	0.032	0.034	0.036	-	-
0 °C	0.10	0.11	0.12	0.13	0.13	0.14	0.15	0.15	0.16	0.17
20 °C	0.37	0.39	0.41	0.43	0.45	0.47	0.49	0.51	0.53	0.55
40 °C	1.08	1.13	1.18	1.24	1.29	1.34	1.39	1.44	1.49	1.54
60 °C	2.73	2.84	2.95	3.07	3.18	3.29	3.40	3.52	3.63	3.74
80 °C	6.08	6.30	6.51	6.73	6.95	7.17	7.39	7.61	7.83	8.05
100 °C	12.2	12.6	13.0	13.4	13.8	14.2	14.6	15.0	15.3	15.7
120 °C	22.6	23.3	23.9	24.6	25.2	25.8	26.5	27.1	27.8	28.4
140 °C	39.1	40.0	41.0	42.0	43.0	44.0	45.0	45.9	46.9	47.9
160 °C	63.5	64.9	66.4	67.8	69.2	70.7	72.1	73.5	74.9	76.4

Index

A

absolute humidity calculation..... 87
accessories.....13
accuracies of calculated variables.....88
accuracy of absolute humidity g/m3..... 90
accuracy of dew point temperature °C.....88
accuracy of mixing ratio g/kg (ambient pressure 1013 mbar).....89
accuracy of wet bulb temperature °C..... 89
adjusting humidity and temperature with push buttons..... 63
adjusting RH with MI70 handheld indicator...66
analog output configuration commands..... 44
analog output error notification..... 73

C

calculation formulas.....85
calibration and adjustment commands..... 38
calibration and adjustment overview.....62
connecting with a computer.....29
constant output probe..... 14

D

device information and status.....33
dew/frost point temperature calculation.....86
dew point temperature calculation.....85
drilling instructions for duct installation kit....23
duct installation.....21

E

enthalpy calculation.....88
error codes.....71
ESD protection..... 16

F

fixed and remote probe models.....12

H

HMT130 component board.....25
HMT130 overview.....12

I

indexterm.....60
installing with radiation shield..... 20
installing with rain shield..... 19
interchangeable probe..... 13
introduction..... 12

L

list of serial commands.....31

M

measurement parameter configuration commands..... 43
MI70 adjustment: 1-point adjustment with calibrator.....68
MI70 adjustment: 2-point adjustment with calibrator.....68
MI70 adjustment: field checking and adjustment using a calibrated reference probe..... 67
MI70 adjustment: LiCl-NaCl adjustment..... 69
MI70 adjustment: temperature field check and adjustment using a calibrated reference probe.....70
mixing ratio calculation.....86

O

opening transmitter cover.....17
optional display..... 13
other serial line commands.....49

P

probe assembly with duct installation kit..... 22
probe mounting clamp.....23
probe mounting flange..... 24
push-button calibration..... 62

R

relay output configuration.....47
removing and fastening fixed probe..... 58
removing and fastening remote probe.....59
replacing the HUMICAP sensor..... 60
RS-485 bus termination..... 27

S

safety.....16
saturation vapor pressure calculation.....86
serial interface settings..... 28
serial line operation commands.....42
serial line output and communication commands..... 37
service port.....28
solving typical problems..... 72
spare parts and accessories..... 79
specifications.....74

T

trademarks.....11
transmitter dimensions..... 82
transmitter parts..... 14

U

USB driver..... 28
user port operation serial commands.....54
using service port..... 28

W

wall mounting..... 17
water vapor pressure calculation..... 87
wiring..... 26

Maintenance and calibration services

Vaisala offers comprehensive customer care throughout the life cycle of our measurement instruments and systems. Our factory services are provided worldwide with fast deliveries. For more information, see vaisala.com/calibration.

- Vaisala Online Store at store.vaisala.com is available for most countries. You can browse the offering by product model and order the right accessories, spare parts, or maintenance and calibration services.
- To contact your local maintenance and calibration expert, see vaisala.com/contactus.

Warranty

For standard warranty terms and conditions, see vaisala.com/warranty.
Please observe that any such warranty may not be valid in case of damage due to normal wear and tear, exceptional operating conditions, negligent handling or installation, or unauthorized modifications. Please see the applicable supply contract or Conditions of Sale for details of the warranty for each product.

Technical support

Contact Vaisala technical support at helpdesk@vaisala.com. Provide at least the following supporting information as applicable:

- Product name, model, and serial number
- Software/Firmware version
- Name and location of the installation site
- Name and contact information of a technical person who can provide further information on the problem

For more information, see vaisala.com/support.

Recycling

Recycle all applicable material according to local regulations.

VAISALA

www.vaisala.com

AKRIBIS · www.akribis.info · contacto@akribis.info