USER GUIDE

TMT120

Vaisala · Authorized Partner

Distributed by AKRIBIS

M211244EN-E

User Guide

Vaisala HUMICAP® Humidity and Temperature Transmitter Series

HMT120 and TMT120

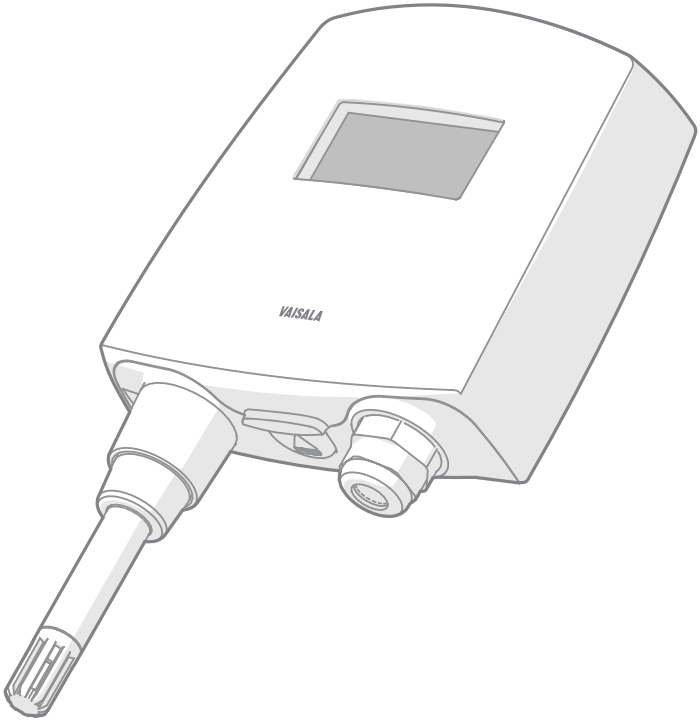

VAISALA

AKRIBIS · www.akribis.info · contacto@akribis.info

PUBLISHED BY

Vaisala Oyj
Vanha Nurmijärventie 21, FI-01670 Vantaa, Finland
P.O. Box 26, FI-00421 Helsinki, Finland
+358 9 8949 1
vaisala.com
docs.vaisala.com

© Vaisala 2025

No part of this document may be reproduced, published, or publicly displayed in any form or by any means, electronic or mechanical (including photocopying), nor may its contents be modified, translated, adapted, sold, or disclosed to a third party without prior written permission of the copyright holder. Translated document and translated portions of the document are based on the original English version. Parts of the translation may have been created using machine-assisted translation. In ambiguous cases, the English version is applicable, not the translation.

The contents of this document are subject to change without prior notice.

Local rules and regulations applicable to the products and services may vary, and they shall take precedence over the information contained in this document. Vaisala makes no representations on this document's compliance with the local rules and regulations applicable at any given time, and hereby disclaims any and all responsibilities related thereto. You are instructed to confirm the applicability of the local rules and regulations and their effect on the intended use of the products and services.

This document does not create any legally binding obligations for Vaisala towards customers or end users. All legally binding obligations are set forth exclusively in the applicable contract or in the relevant set of General Conditions of Vaisala (vaisala.com/policies).

This product contains software developed by Vaisala or third parties. Use of the software is governed by license terms and conditions included in the applicable contract or, in the absence of separate license terms and conditions, by the General License Conditions of Vaisala Group.

Table of contents

1. About this document ... 9
1.1 Version information ... 9
1.2 Related manuals ... 10
1.3 Documentation conventions ... 10
1.4 Trademarks ... 11

2. Product overview ... 12
2.1 Introduction to HMT120 series ... 12
2.2 Fixed and remote probe models ... 12
2.3 Accessories ... 13
2.4 Optional display ... 13
2.5 Interchangeable probe ... 13
2.6 Constant output probe ... 14
2.7 Transmitter parts ... 14
2.8 Safety ... 16
2.8.1 ESD protection ... 16

3. Installation ... 17
3.1 Opening the transmitter cover ... 17
3.2 Wall mounting ... 17
3.3 Installation with rain shield ... 19
3.4 Installation with radiation shield ... 20
3.5 Duct installation kit ... 21
3.5.1 Probe assembly with duct installation kit ... 22
3.5.2 Drilling instructions for duct installation kit ... 23
3.6 Probe mounting clamp ... 23
3.7 Probe mounting flange ... 24
3.8 Connections ... 25
3.8.1 Wiring ... 26

4. Serial line operation ... 27
4.1 Using the service port ... 27
4.2 Serial interface settings ... 27
4.3 Installing driver for the USB service cable ... 27
4.4 Connecting with a computer ... 28
4.5 List of serial commands ... 30
4.6 Device information and status ... 31
4.7 Serial line output and communication ... 35
4.8 Calibration commands ... 37
4.9 Configuring serial line operation ... 40
4.10 Measurement parameter configuration commands ... 42
4.11 Analog output configuration commands ... 43
4.12 Other commands ... 45

5. Maintenance 51
5.1 Removing and fastening fixed probe 51
5.2 Removing and fastening remote probe 52
5.3 Testing analog outputs 53
5.4 Replacing the HUMICAP® sensor 54

6. Calibration and adjustment 55
6.1 Calibration and adjustment overview 55
6.2 Push-button calibration 55
6.2.1 Adjusting humidity and temperature with push buttons 56
6.3 Adjusting RH and T with MI70 handheld indicator 59
6.3.1 Field checking and adjustment using a calibrated reference probe 60
6.3.2 1-point adjustment using a calibrator 61
6.3.3 2-point adjustment using a calibrator 61
6.3.4 LiCl-NaCl adjustment 62
6.3.5 Temperature field check and adjustment using a calibrated reference probe 63

7. Troubleshooting 64
7.1 Error codes 64
7.2 Solving typical problems 65
7.3 Analog output error notification 66

8. Technical data 67
8.1 HMT120 specifications 67
8.2 TMT120 specifications 69
8.3 Spare parts and accessories 71
8.4 Transmitter dimensions 75

Appendix A: Calculation formulas 78
A.1 Calculation formulas overview 78
A.2 Dew point temperature 78
A.3 Dew/frost point temperature calculation 79
A.4 Mixing ratio calculation 79
A.5 Saturation vapor pressure calculation 79
A.6 Water vapor pressure calculation 80
A.7 Absolute humidity calculation 80
A.8 Enthalpy calculation 81
A.9 Accuracies of calculated variables 81
A.9.1 Accuracy of dew point temperature °C 81
A.9.2 Accuracy of mixing ratio g/kg (ambient pressure 1013 mbar) 82
A.9.3 Accuracy of wet bulb temperature °C 82
A.9.4 Accuracy of absolute humidity g/m^3 83

Index 84

Maintenance and calibration services 87

Warranty.....87

Technical support.....87

Recycling..... 87

List of figures

Figure 1 Main transmitter parts.....15
Figure 2 Opening the transmitter cover.....17
Figure 3 Wall mounting measurements.....18
Figure 4 Installation with rain shield.....19
Figure 5 Probe Installation with radiation shield.....20
Figure 6 Probe installation with the duct installation kit.....21
Figure 7 Probe assembly with duct installation kit.....22
Figure 8 Drilling instructions.....23
Figure 9 Optional probe mounting clamp.....24
Figure 10 Optional probe mounting flange.....24
Figure 11 HMT120 component board.....25
Figure 12 Isolated current loop wiring.....26
Figure 13 Removing the probe (fixed probe model).....51
Figure 14 Removing the probe (remote probe model).....52
Figure 15 HMT120 output current measurement.....53
Figure 16 Adjustment buttons.....56
Figure 17 Fixed probe model dimensions in mm [in], with HMP110.....75
Figure 18 Fixed probe model dimensions in mm [in], with TMP115.....76
Figure 19 Remote probe model dimensions in mm [in], with HMP110.....77

List of tables

Table 1 Document versions (English)....9
Table 2 Related manuals....10
Table 3 Wiring table....26
Table 4 Default serial interface settings....27
Table 5 List of serial commands....30
Table 6 ? command....31
Table 7 CALCS command....32
Table 8 CDATE command....33
Table 9 CTEXT command....33
Table 10 AOUT command....34
Table 11 SYSTEM command....35
Table 12 VERS command....35
Table 13 R command....35
Table 14 S command....36
Table 15 INTV command....36
Table 16 SEND command....37
Table 17 CRH command....37
Table 18 CRHCLR command....38
Table 19 CT command....38
Table 20 CTCLR command....39
Table 21 ACAL command....40
Table 22 SERI command....40
Table 23 ECHO command....41
Table 24 SMODE command....41
Table 25 ENV command....42
Table 26 AERR command....43
Table 27 ASEL command....43
Table 28 ATEST command....45
Table 29 DSEL command....45
Table 30 FORM command....46
Table 31 HELP command....47
Table 32 ERRS command....47
Table 33 SAVE command....48
Table 34 RESTORE command....48
Table 35 RESET command....49
Table 36 FRESTORE command....49
Table 37 UNIT command....49
Table 38 Error codes, descriptions, and texts....64
Table 39 Problems and solutions....65
Table 40 HMT120 measurement performance....67
Table 41 HMT120 operating environment....68
Table 42 HMT120 inputs and outputs....68
Table 43 HMT120 mechanical specifications....69
Table 44 TMT120 measurement performance....69
Table 45 TMT120 operating environment....70

Table 46 TMT120 inputs and outputs..... 70
Table 47 TMT120 mechanical specifications.....71
Table 48 HMT120 spare parts and accessories.....71
Table 49 TMT120 spare parts and accessories..... 73
Table 50 Temperature dependence for A, m, and Tn..... 78
Table 51 Temperature dependence for A, m, and Tn..... 79
Table 52 Accuracy of dew point temperature °C.....81
Table 53 Accuracy of mixing ratio g/kg (ambient pressure 1013 mbar).....82
Table 54 Accuracy of wet bulb temperature °C.....82
Table 55 Accuracy of absolute humidity g/m^3..... 83

1. About this document

1.1 Version information

Table 1 Document versions (English)

Document code	Date	Description
M211244EN-E	February 2025	Added information on the wide-range temperature probe TMP115 option for TMT120 transmitters. Updated sections: • Introduction to HMT120 series (page 12) • Accessories (page 13) • Fixed and remote probe models (page 12) • Interchangeable probe (page 13) • Transmitter parts (page 14) • Removing and fastening fixed probe (page 51) • Calibration commands (page 37) • Push-button calibration (page 55) • Analog output error notification (page 66) • HMT120 specifications (page 67) • Spare parts and accessories (page 71) • Transmitter dimensions (page 75) Added sections: • TMT120 specifications (page 69)
M211244EN-D	December 2021	Information on temperature transmitter model TMT120 added. Updated sections: • Description and example for **ct** command in Calibration commands (page 37) • Temperature measurement accuracy specifications and spare part probe models in HMT120 specifications (page 67) • Visual and textual style updates Removed sections: • Patent notice • Regulatory compliances (now listed in HMT120 specifications (page 67)) • Adjustment with HMI41 (following the discontinuation of HMI41)
M211244EN-C	January 2018	Factory calibration uncertainty specification updated. Spare parts list updated. Document template updated, content structure revised.

1.2 Related manuals

For the latest versions of these documents, see docs.vaisala.com.

Table 2 Related manuals

Document code	Description
M210185EN	Vaisala HMK15 Humidity Calibrator User Guide
M210297EN	Vaisala HM70 Handheld Humidity and Temperature Meter User Guide
M211060EN	Vaisala HMP60 and HMP110 Series Humidity and Temperature Probes User Guide

1.3 Documentation conventions

WARNING! Warning alerts you to a serious hazard. If you do not read and follow instructions carefully at this point, there is a risk of injury or even death.

CAUTION! Caution warns you of a potential hazard. If you do not read and follow instructions carefully at this point, the product could be damaged or important data could be lost.

Highlights important information on using the product.

Gives information for using the product more efficiently.

Lists tools needed to perform the task.

Indicates that you need to take some notes during the task.

1.4 Trademarks

Vaisala® and HUMICAP® are registered trademarks of Vaisala Oyj.

All other product or company names that may be mentioned in this publication are trade names, trademarks, or registered trademarks of their respective owners.

2. Product overview

2.1 Introduction to HMT120 series

Vaisala HMT120 series transmitters measure relative humidity and temperature and convert the measurements to analog current loop outputs. Other measurement parameters, such as dew point (T_d), can be calculated from the basic relative humidity and temperature values according to the device configuration. HMT120 is powered with 10–30 V DC external loop voltage (20–30 V DC when R_L <500 ohms) and it outputs two analog current signals with nominal 4–20 mA range. The HMP110 series measurement probes used with HMT120 incorporate the reliable Vaisala HUMICAP® humidity sensor technology.

The HMT120 transmitter's output parameters are configurable. The available parameters for outputs are limited to two at a time. These two parameters can be used freely at any outputs (display, service port, and analog current loop outputs).

Available parameters are RH, T, T_d, $T_{d/f}$, a, x, h, T_w, p_{ws}, and p_w.

The default output parameters are set at the factory during order time. These factory preset parameter selections can be changed afterwards via the service port if necessary.

TMT120 transmitter

The TMT120 transmitter is a single-parameter model, with temperature as the only output parameter from a temperature-only HMP110T probe or a TMP115 wide-range temperature probe.

The recommended firmware version for TMT120 transmitters equipped with a TMP115 probe is 1.2.0 or newer. To check the firmware version of your TMT120 transmitter, you can use the free Insight PC software, available at vaisala.com/insight.

2.2 Fixed and remote probe models

The transmitter is available either with a fixed probe directly attached to the transmitter housing or a remote probe with different (3/5/10/20 m (10/16/33/66 ft)) cable lengths. All extension cables can be easily cascaded in order to obtain longer reach.

In TMT120 transmitters ordered with a TMP115 probe, the probe is always a fixed probe directly attached to the transmitter. The TMP115 probe includes a cable between its probe body and sensor tip. The total length of the TMP115 probe is 3 m (9.8 ft), including the probe body and sensor tip.

More information

- Spare parts and accessories (page 71)

2.3 Accessories

The following accessories are optionally available:

- Rain shield with installation kit
- Rain/solar radiation shield installation kit (for pole installation, remote probe model)
- Duct installation kit (for remote probe model)
- Probe mounting flange (for remote probe model)
- Probe mounting clamp (for remote probe model)
- Probe holder (for remote probe model)
- Constant output probe (HMP1100REF, gives constant RH and T values)

More information

- Spare parts and accessories (page 71)

2.4 Optional display

The transmitter is also available with an optional graphical 128×64 pixel resolution LCD display. The display shows the measurement results of selected parameters in selected units (metric or non-metric, defined when ordering the transmitter). The parameters are displayed simultaneously on two separate rows on the display.

More information

- Transmitter parts (page 14)

2.5 Interchangeable probe

The probes used in the transmitter are fully interchangeable. You can easily remove the probe and replace it with a new one without having to adjust the transmitter.

> Only probes that have a compatible digital output (VDIGI mode) can be used with the transmitter. Compatible probes have the letter "V" as the first letter in their order code. The order code is written on the probe.

More information

- Removing and fastening fixed probe (page 51)
- Removing and fastening remote probe (page 52)
- Technical support (page 87)

2.6 Constant output probe

The constant output probe HMP110REF is a testing accessory that can be used to check the transmitter's functions and measurement signal transfer chain all the way to the control system. The constant output probe does not measure humidity and temperature; instead, it outputs constant humidity and temperature readings.

The values output by the constant output probe are specified when ordering. These values are written on an additional label on the probe body.

The procedure for using the constant output probe is simply to replace the original probe for the duration of the testing.

1. Disconnect the standard probe from the transmitter.
2. Connect the constant output probe to the transmitter.
3. Check that all used outputs (analog, display, serial line) show the correct measurement values.
4. After checking the outputs, disconnect the constant output probe and reconnect the original probe.

The transmitter goes to error state for a short time when the probe is changed. This is normal.

More information

- Removing and fastening fixed probe (page 51)
- Removing and fastening remote probe (page 52)

2.7 Transmitter parts

Figure 1 (page 15) shows the main transmitter parts. The HMP110 probe is shown as an example probe connected to the transmitter.

- On the left is a model with a remote probe and no display.
- On the right is a model with a fixed probe and an optional display.

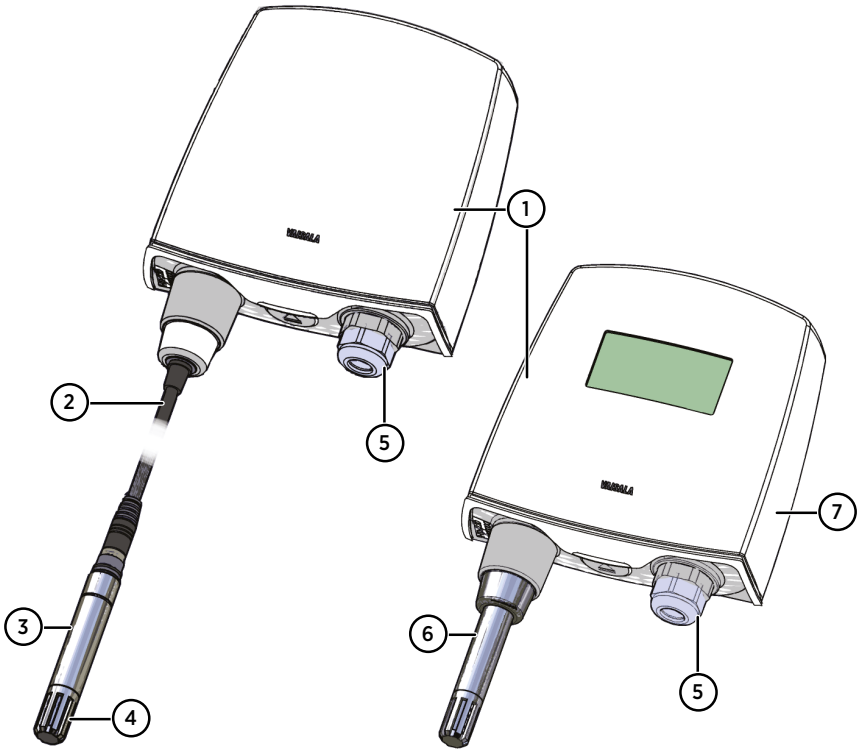

Figure 1 Main transmitter parts

1 Transmitter enclosure
2 Probe connection cable
3 Remote probe (HMP110 shown as an example)
4 Plastic grid filter
5 Cable bushing: cable gland, cable grommet, or conduit fitting
6 Fixed probe (HMP110 shown as an example)
7 Serial number and device configuration code for the options selected with the Vaisala order form (under the cover)

For explanations for your transmitter's configuration code, see the transmitter's order form at docs.vaisala.com.

More information

- Spare parts and accessories (page 71)

2.8 Safety

The transmitter delivered to you has been tested for safety and approved as shipped from the factory. Note the following precautions:

CAUTION! Do not modify the unit or use it in ways not described in the documentation. Improper modification or use may lead to safety hazards, equipment damage, failure to perform according to specification, or decreased equipment lifetime.

2.8.1 ESD protection

Electrostatic discharge (ESD) can damage electronic circuits. Vaisala products are adequately protected against ESD for their intended use. However, it is possible to damage the product by delivering electrostatic discharges when touching, removing, or inserting any objects in the equipment housing.

To avoid delivering high static voltages to the product:

- Handle ESD-sensitive components on a properly grounded and protected ESD workbench or by grounding yourself to the equipment chassis with a wrist strap and a resistive connection cord.
- If you are unable to take either precaution, touch a conductive part of the equipment chassis with your other hand before touching ESD-sensitive components.
- Hold component boards by the edges and avoid touching component contacts.

3. Installation

3.1 Opening the transmitter cover

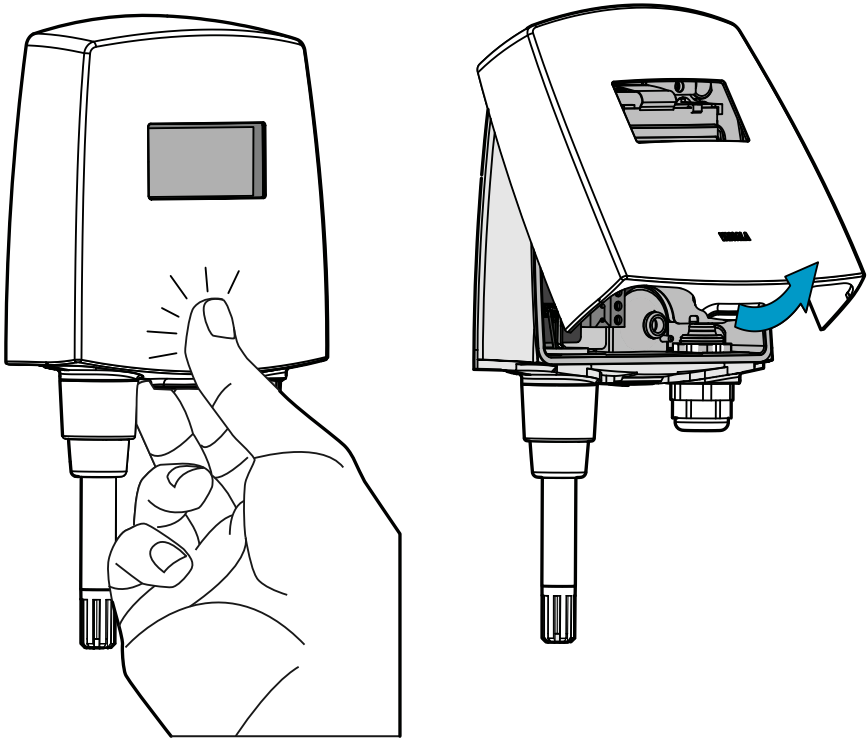

Figure 2 Opening the transmitter cover

To open the transmitter cover:

1. If the transmitter is not mounted already, hold it against a flat surface.
2. Push on the cover with your thumb, and pull the bottom part of the cover towards yourself.

3.2 Wall mounting

To mount the transmitter on a wall:

1. Remove the transmitter cover.
2. Make sure that the transmitter is correctly aligned and attach it directly to the wall with up to four screws (not included in the package). Figure 3 (page 18) shows the distances between attachment points.

CAUTION! It is possible to damage the display when tightening the screws, as there is not much room between the upper fastening holes and the exposed display component. Be particularly careful when using a cordless drill.

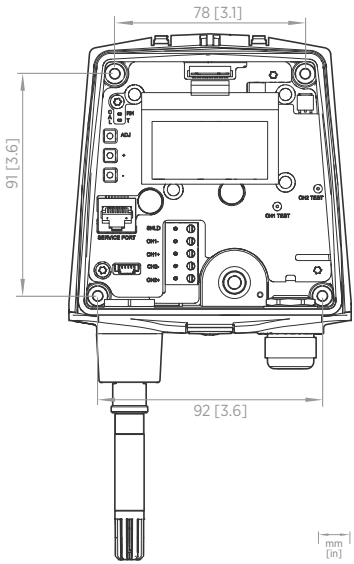

Figure 3 Wall mounting measurements

Select the size and type of the fastening screws according to the wall material (for example, wood or stone). Even though using all four screws is strongly recommended, the transmitter enclosure fastening holes are initially covered with a thin plastic membrane, so less than four screws could also be used without sacrificing the ingress protection (IP) class of the enclosure. The diameter of the fastening screws is typically 3.5 ... 4 mm (0.14 ... 0.16 in).

More information

- Opening the transmitter cover (page 17)

3.3 Installation with rain shield

The installation kit with rain shield (Vaisala item code 215109) includes a metal mounting plate and a rain shield for the transmitter.

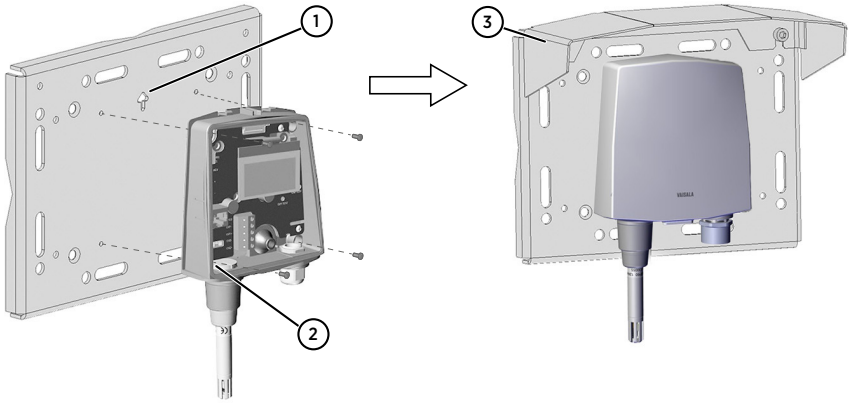

Figure 4 Installation with rain shield

To install the transmitter with the rain shield:

1. Fasten the metal mounting plate to the wall or pole with screws. Note the arrow on the mounting plate. Attach the mounting plate with the arrow pointing upwards.
2. Drill holes for the screws in the transmitter frame, and fasten the transmitter to the metal mounting plate with four (M4) screws.
3. Fasten the rain shield to the metal mounting plate with two (M6) mounting screws.

3.4 Installation with radiation shield

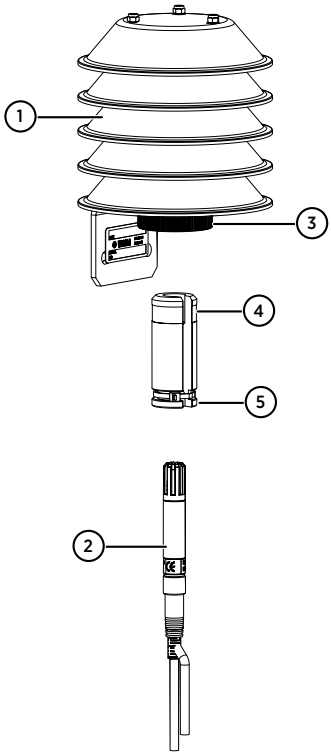

DTR504 with probe installation kit (Vaisala item code DTR504A) includes the rain/solar radiation shield DTR504 and a plastic installation support for a remote humidity probe. If you already have the DTR504 shield and need only the installation support for the probe, the installation support is available with Vaisala item code 227777.

Figure 5 Probe Installation with radiation shield

1 DTR504
2 Probe
3 Plastic nut
4 Installation support (item code 227777)
5 Cable tie

To install the probe with a radiation shield:

1. Fasten the probe (2) to the installation support with a cable tie (5).
2. Insert and attach the support to the radiation shield by tightening the plastic nut (3).
3. Attach the entire radiation shield/probe assembly to a pole mast (pole mast diameter: 30 ... 60 mm (1.2 ... 2.3 in) with a U-bolt and a support arm.

3.5 Duct installation kit

The duct installation kit includes a plastic pipe with a flange (Vaisala item code 215619). To install the probe with the duct installation kit, drill a hole in the duct wall, assemble the probe to the duct installation kit, slide the probe head through the hole, and attach the flange to the duct wall with four screws.

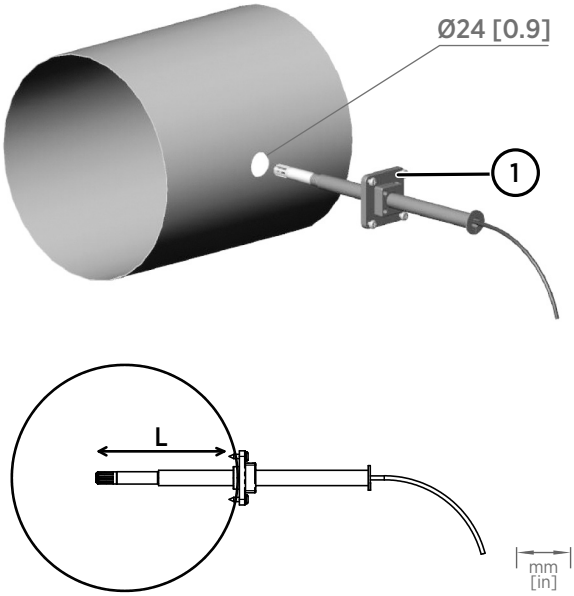

Figure 6 Probe installation with the duct installation kit

1 Tension screw

The installation depth (distance **L**) can be adjusted and locked in place with the tension screw.

3.5.1 Probe assembly with duct installation kit

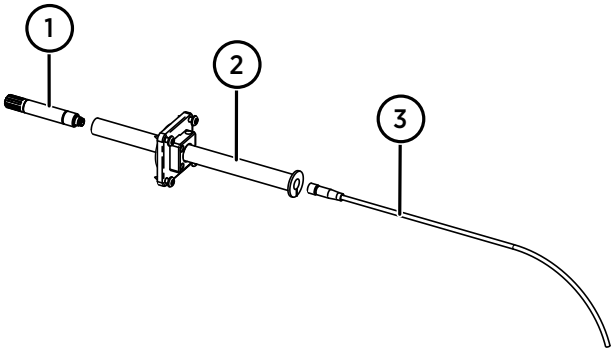

Figure 7 Probe assembly with duct installation kit

1 Probe
2 Duct installation kit
3 Probe cable

1. Slide the probe cable through the plastic pipe in the duct installation kit.
2. Attach the probe cable to the probe.
3. Attach the probe assembly to the duct.

3.5.2 Drilling instructions for duct installation kit

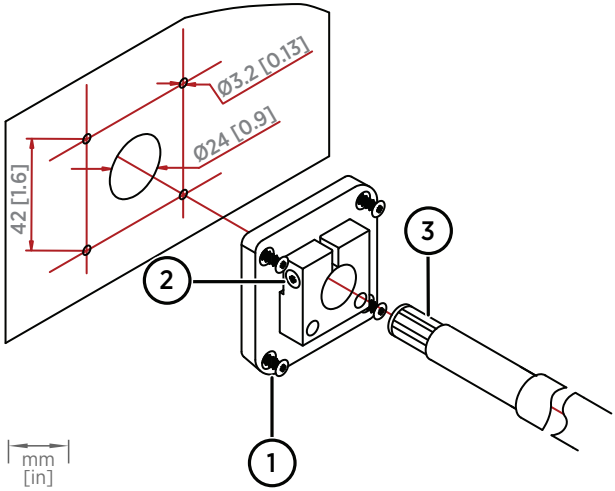

Figure 8 Drilling instructions

1 Mounting screw
2 Tension screw
3 Probe assembled in plastic pipe of duct installation kit

To drill the holes for the duct installation kit:

1. Use a 24-mm (0.9-in) drill bit to drill a hole to the duct wall for the probe.
2. Drill holes for the duct installation kit mounting screws around the hole in a square arrangement, 42 mm (1.6 in) apart from each other. Use a 3.2-mm (0.13-in) drill bit to drill the holes for the mounting screws (four ST4.2×16-C-Z DIN 7981 screws).

3.6 Probe mounting clamp

The optional mounting clamp makes it easy to install the probe on the wall of the measurement environment. The probe can be detached for calibration simply by loosening the lower screw. You can order a single clamp (Vaisala order code 225501) or a set of 10 clamps (226067).

Installing the entire probe in the measurement environment prevents heat conduction to the sensor, and is the recommended installation method.

Figure 9 Optional probe mounting clamp

CAUTION! Attaching the probe mounting clamp to a conductive wall material should be avoided, since the potential galvanic connection to the power supplies and uncontrolled earth current loops could cause measurement errors or even damage to the transmitter.

3.7 Probe mounting flange

The probe mounting flange (Vaisala item code 226061) is a general purpose mounting flange for 12 mm (0.47 in) diameter probes. It can be used to hold the probe in a through-wall installation.

The coaxial silicone plug that is delivered with the flange is not suitable for use with the transmitter's probe cable.

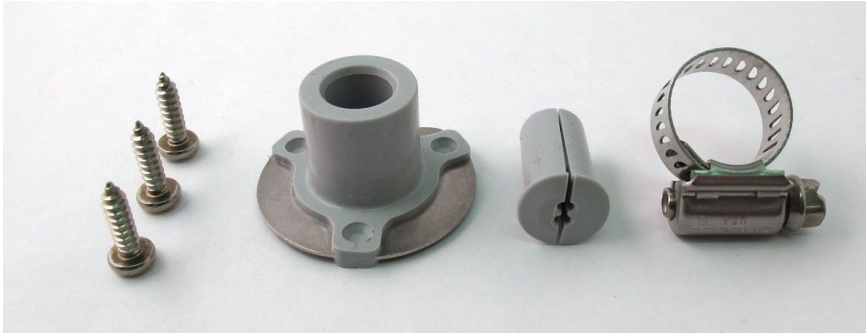

Figure 10 Optional probe mounting flange

3.8 Connections

Figure 11 (page 25) shows the main parts of the HMT120 component board, including the wiring connectors.

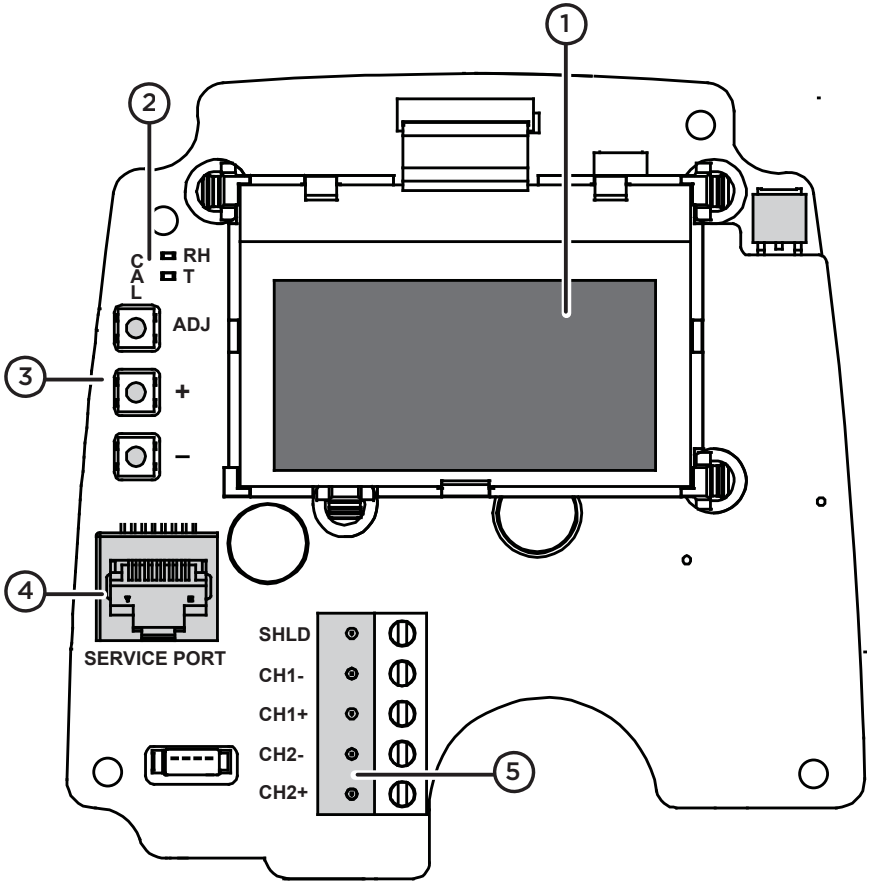

Figure 11 HMT120 component board

1 Optional LCD display
2 Indicator LEDs
3 Adjustment buttons
4 Service port
5 Field wire terminals

3.8.1 Wiring

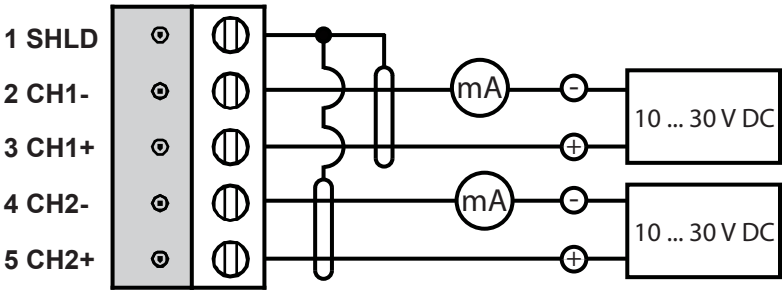

Figure 12 Isolated current loop wiring

Table 3 Wiring table

Terminal [1)]	Current Output (2-Wire, CH2 Isolated)
1	Cable shield (optional)
2	CH1- (signal and power supply -)
3	CH1+ (signal and power supply +)
4	CH2- (signal and power supply -)
5	CH2+ (signal and power supply +)

1) Terminal numbers 1 ... 5 in the first column of the wiring table refer to Figure 12 (page 26)

To connect the wiring:

1. Remove the transmitter cover as instructed in Opening the transmitter cover (page 17).
2. Insert the signal wires through the selected cable gland/conduit fitting in the bottom of the transmitter or alternatively through the rubber grommet at the back side of the transmitter.
3. Connect the wires as instructed in Figure 12 (page 26) and Table 3 (page 26). Suitable wire size is 0.5 ... 1.5 mm^2 (20 ... 15 AWG).

> If an isolated output is required with current outputs, both channels require their own power supply. CH1 must always be powered because CH1 is the main output, and the transmitter will not operate if only CH2 is connected.

4. Close the cover by keeping it slightly tilted and first attaching it to the fixing snaps at the top of the enclosure base. Then push the lower part of the cover firmly forward until it locks. The transmitter is ready for use.

4. Serial line operation

4.1 Using the service port

The transmitter's component board has an 8-pin RJ-45 connector for service use. The service port uses RS-232 signaling levels. Vaisala offers an optional USB cable (Vaisala item code 219685) for connecting the transmitter to your computer.

The service port is intended for short-term use such as calibration. For permanent installation, use the analog output.
Connecting a computer to the service port may cause erroneous analog output because of a possible ground loop. Use the service port for service only and disconnect the computer after the service operation.

The cable can also provide operation power to the transmitter, so the wires at the screw terminals need not be connected in order to operate the transmitter.

If you have not used the transmitter's USB cable before, install first the driver for it on your computer.

More information

- Installing driver for the USB service cable (page 27)

4.2 Serial interface settings

Table 4 Default serial interface settings

Property	Description/Value
Bit rate	19200
Parity	None
Data bits	8
Stop bits	1
Flow control	None

4.3 Installing driver for the USB service cable

Only Windows® operating systems are supported by the driver of the USB service cable.

1. Connect the USB service cable to a USB port on your computer. Windows® detects the new device and installs the appropriate driver.
2. Open **Device Manager** from the Windows® Start menu. Use search to find it if necessary (search for "device").
3. Locate the cable in the list of devices:
   - If the device is listed as **Vaisala USB Device** with a COM port number in brackets, the cable is ready for use.
   - If the device is listed as **Vaisala USB Instrument Cable** without a COM port number listed, you must install the driver manually.

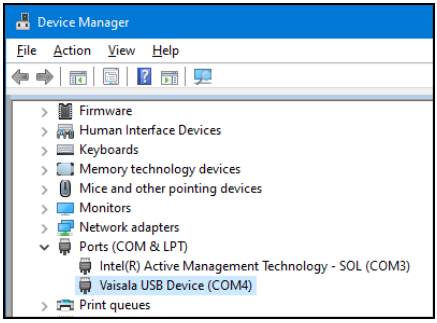

4. To install the driver manually:
   a. Disconnect the USB service cable from the computer.
   b. Download the Vaisala USB driver at vaisala.com/software (select the appropriate USB Instrument Driver Setup for your cable).
   c. Extract the driver zip file and run the USB driver installation program *`Vaisala USB Device Driver Setup.exe`*. Accept the installation defaults.
   d. Go back to step 1 and verify that the driver installation works as expected.

4.4 Connecting with a computer

- Vaisala USB service cable (item code 219685)
- Computer with:
  - Windows operating system
  - Terminal application (for example PuTTy, available from http://www.vaisala.com/software)
  - Free USB port
  - Driver for Vaisala USB service cable installed (available for download at http://www.vaisala.com/software)

The steps below describe how to connect to the transmitter using the PuTTY terminal application for Windows and a USB computer connection cable.

1. If you have not used the Vaisala USB cable before, install the driver before attempting to use the cable.
2. Connect the USB cable between your computer and the transmitter's service port.
3. Start the PuTTY application.
4. Select **Connection > Serial & USB** and check that the correct COM port is selected in the **Serial or USB line to connect to** field. If you are using the PuTTY terminal application supplied by Vaisala, you can press the **USB Finder** button to open the Vaisala USB Instrument Finder program.
5. Check that the other serial settings are correct for your connection, and change if necessary. **Flow control** should be set to **None** unless you have a reason to change it.

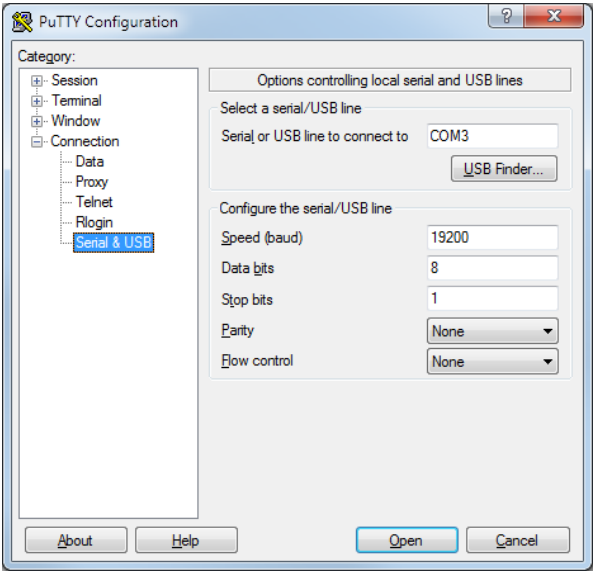

6. Select **Terminal**. Use the following settings:
   - **Local Echo**
     Select **Force on**. This setting ensures that your typing is shown on the session window.
   - **Send line ends with line feeds (CR+LF)**
     Make sure this option is not selected. Enabling line end sending with line feeds can cause issues with the terminal connection.

7. To open the connection window and start using the serial line, select **Open**.

> If PuTTY is unable to open the serial port you selected, it shows you an error message instead. If this happens, restart PuTTY and check the settings.

4.5 List of serial commands

All commands can be issued either in uppercase or lowercase.

The notation **<cr>** refers to pressing the carriage return (**ENTER**) key on your computer keyboard. Enter a **<cr>** to clear the command buffer before starting to enter commands.

Whenever you change any of the parameters and want to store the changes permanently, use the **SAVE** command.

> Measurement parameters are referred to as *quantities* in the transmitter's software.

Table 5 List of serial commands

Command	Description
?	Show transmitter information
ACAL	Calibrate analog outputs
AERR	Set/show analog output error levels
AOUT	Show analog output status
ASEL	Set/show analog output parameters and scaling
ATEST	Test analog outputs
CALCS	Set/show measured parameters
CDATE	Set/show calibration date
CRH	Calibrate probe RH
CRHCLR	Restore probe RH factory calibration
CT	Calibrate probe T
CTCLR	Restore probe T factory calibration
CTEXT	Set/show calibration info
DSEL	Set/show displayed parameters
ECHO	Set/show terminal echo mode

Command	Description
ENV	Set/show environmental parameters
ERRS	Display active errors
FORM	Set/show output formatting
FRESTORE	Restore all transmitter settings to factory defaults
HELP	List available commands
INTV	Set/show the continuous output interval
R	Start continuous outputting
RESET	Reset transmitter
RESTORE	Restores the latest saved settings
S	Stop continuous outputting
SAVE	Save changed settings to FLASH memory
SEND	Output the reading once
SERI	Set/show service port settings (default: 19200 N 8 1)
SMODE	Set/show the serial interface mode
SYSTEM	Show transmitter information and build date
UNIT	Set/show output unit
VERS	Show firmware version of the transmitter

4.6 Device information and status

Table 6 ? command

Syntax	Description
?<cr>	Show listing of device information.
??<cr>	Show listing of device information even if device is in poll mode and connection has not been opened using the **open** command.

Syntax	Description
Example:	

```
?
Device Name          : HMT120
SW Name              : HMT120
SW model             : HMT130
SW version           : 0.9.3.389
Serial number        : "F2220101"
Address              : 0
Unit                 : METRIC
Ch1 Status           : ON
Ch2 Status           : ON
Probe name           : "HMP110"
Probe SW             : "1.01.1"
Probe SW date        : ""
Probe SN             : "F0740011"
```

Table 7 CALCS command

Syntax	Description
calcs [q1 q2]<cr> where q1, q2 Any two of the allowed measurement parameters [1], that is, **RH**, **T**, **TD**, **TDF**, **A**, **X**, **H**, **TW**, **PWS**, **PW**	The **calcs** command shows the abbreviations of the parameters measured by the transmitter. The command can also be used to select the desired parameters for measurement. Only after the parameters have been set with the **calcs** command, can these parameters be selected for different outputs (see commands **dsel**, **asel**, and **form**). The parameters in **dsel**, **asel**, **rsel**, and **form** must match with those in **calcs**.
Examples:	

```
>calcs RH Td
>

calcs td t
>
```

The TMT120 temperature transmitter model has only one measurement parameter, T.

1) *Measurement parameters are referred to as 'quantities' in the transmitter's software.*

Table 8 CDATE command

Syntax	Description
cdate<cr>	Show calibration date. Calibration refers to the calibration of the transmitter's analog outputs.
cdate [yyyymmdd]<cr>	Set a new calibration date. **yyyy-mm-dd** = Year (yyyy), month (mm) and day (dd) of calibration
Example: **>cdate** Calibrated : "NOT SET" >	
Example (set a new calibration date to June 30, 2017): **cdate 2017-06-30** Calibrated : "2017-06-30"	

Table 9 CTEXT command

Syntax	Description
ctext<cr>	Show calibration information text. Calibration refers to the calibration of the transmitter's analog outputs.
ctext [text]<cr>	Set a new calibration information text to be shown after the automatic text "**Calib. info**".
Example: **ctext** Calib. info: "VAISALA HELSINKI" >	

Syntax	Description
Example (set a new information text):	

```
ctext Calibration lab 2
Calib. info: "Calibration lab 2"
>
```

Table 10 AOUT command

Syntax	Description

aout<cr>	The **aout** command shows the following information:
	• **Analog out mode** is the output mode for the channel, for example 0 ... 10 V.
	• **Error level** is the level that the analog output is set to in case of transmitter error.
	• **Status** indicates the current status of the channel. The statuses are:
	  • **ON**: Normal measurement operation.
	  • **OFF**: No parameter selected for the channel using the **asel** command. See Table 27 (page 43).
	  • **ERROR**: Transmitter error, channel set to error level.
	  • **TEST**: Analog channel being tested using the **atest** command. See Table 28 (page 45).

Example (no active errors):	

```
>aout
*** ANALOG OUTPUT 1 ***
Ch1 Analog out mode : 4_20MA
Ch1 Notification    : ON
Ch1 Error level     : 3.6
Ch1 Status          : ON
Ch1 Quantity        : RH
RH lo               : 0
RH hi               : 100
RH                  : 23.32 %
Current             : 7.73 mA

*** ANALOG OUTPUT 2 ***
Ch2 Analog out mode : 4_20MA
Ch2 Notification    : ON
Ch2 Error level     : 3.6
Ch2 Status          : ON
Ch2 Quantity        : T
T lo                : -60
T hi                : 100
T                   : 23.66 'C
Current             : 12.37 mA
>
```

Table 11 SYSTEM command

Syntax	Description
system<cr>	Show probe firmware information.
Example: **system** Device Name : HMT120 SW Name : HMT120 SW model : HMT120 SW version : 1.0.0.500 Serial number : A1234567 >	

Table 12 VERS command

Syntax	Description
vers<cr>	Show firmware version of the probe.
Example: **vers** HMT120 / 0.1.0.103	

4.7 Serial line output and communication

Table 13 R command

Syntax	Description
r<cr>	S Use the **r** command to start the continuous outputting of measurement values as an ASCII text string to the serial line. The output always includes the readings of the currently selected analog output parameters. Outputting the results continues in intervals issued with the command **intv**. You can stop the output by entering the **s** command. You can define the output data formatting with the **form** command. With X parameter the transmitter will output RH + T value in predefined format regardless of what parameters are selected.

Syntax	Description
Example:	

```
r
RH= 25.10% T= 24.77'C
RH= 25.12% T= 24.96'C
...
```

Table 14 S command

Syntax	Description
s<cr>	Stop the continuous outputting that was started with the **r** command.
Example:	

```
...
RH= 25.10% T= 24.77'C
RH= 25.12% T= 24.96'C
s
```

Table 15 INTV command

Syntax	Description
intv<cr>	Use the **intv** command to show or set the output interval of the serial line measurement messages (applies when **r** command or **RUN** mode is used). The shortest output interval is one second. This command has no effect on the operation of the analog outputs.
intv [iii uuu]<cr>	Set the output interval. iii = interval, range 0 ... 255. u = unit for interval setting: • s = seconds • min = minutes • h = hours If you set the interval to 0, the output messages are output as quickly as they are generated, without additional delay.
Example:	

```
intv 5 s
Output interval: 5 S
>
```

Table 16 SEND command

Syntax	Description
send [x] <cr>	Use the **send** command to output a single measurement reading from the transmitter. When you enter the **x** parameter, the transmitter will output RH + T value in predefined format regardless of what parameters are selected.
Example: **send** RH= 25.12 % T= 24.91 'C >	

4.8 Calibration commands

Serial commands that are related to calibration are described in this section. For the actual calibration procedures, see Calibration and adjustment overview (page 55).

Table 17 CRH command

Syntax	Description
crh<cr>	Use the **crh** command to perform a 1-point or 2-point humidity (RH) calibration. When performing a 1-point calibration, you need to place the probe in a single humidity reference with RH < 50%. Run the command and enter the exact RH of the reference after the measurement has stabilized. Exit the command by pressing the **ESC** key before proceeding to the second point (see example 3). To update the value, press **ENTER** without inputting a value. For 2-point calibration, the first point requires a RH < 35% humidity reference, the second point must be RH > 50%.
Example 1: 1-point calibration **>crh** RH: 11.29915720 Ref1 ? **11.3** Press ENTER to continue or ESC to exit OK >	

Syntax	Description

Example 2: 2-point calibration
`>crh`
`RH:  11.29915720 Ref1 ? 11.3`
`Press ENTER to continue or ESC to exit`
`RH:  75.04306440 Ref2 ? 75`
`OK`
`>`	

Example 3: No calibration, only updating the value
`>crh`
`RH:  20.28000200 Ref1 ?`
`RH:  20.14000000 Ref1 ?`
`Calibration terminated with ESC`
`>`	

Table 18 CRHCLR command

Syntax	Description
crhclr<cr>	Use the **crhclr** command to restore the probe RH factory calibration.

Example:
`>crhclr`
`OK`
`>`	

Table 19 CT command

Syntax	Description
ct<cr>	Use the **ct** command to perform a 1-point or 2-point temperature calibration. When performing a 1-point calibration, you need to place the probe in a single temperature reference. Run the command and enter the exact temperature of the reference after the measurement has stabilized. Exit the command by pressing the **ESC** key before proceeding to the second point. To update the value, press **ENTER** without inputting a value. For 2-point calibration, the second reference point must be at least 30 °C (86 °F) warmer than the first. The measurement reading for the second point will appear when this requirement is met.

Syntax	Description

Example 1: 1-point calibration
`>ct`
`T  21.9827 Ref1 ? 22`
`Press ENTER to continue or ESC to exit`
`OK`
`>`	

Example 2: 2-point calibration
`>ct`
`T  22.0007 Ref1 ? 22`
`Press ENTER to continue or ESC to exit`
`T  54.9847 Ref2 ? 55`
`OK`
`>`	

Example 3: No calibration, only updating the value
`>ct`
`T  22.0007 Ref1 ?`
`T  22.0145 Ref1 ?`
`Calibration terminated with ESC`
`>`	

Table 20 CTCLR command

Syntax	Description
`ctclr<cr>`	Use the **ctclr** command to restore the probe temperature factory calibration.

Example:
`>ctclr`
`OK`
`>`	

Table 21 ACAL command

Syntax	Description
acal<cr>	Use the **acal** command to calibrate the analog current loop outputs. After you give this command, the CH1 analog output of the transmitter is set to the low limit (4 mA). Measure the output and enter the measured value. After entering the low limit, you must measure and enter the high limit (20 mA) also. The same procedure is then repeated with CH2. Calculated coefficients are printed after the measured values are given. Use the SAVE command after completing the ACAL command to store the adjustment.

Example:

```
>acal
Ch1  I1 (mA)  ? 5.60
Ch1  I2 (mA)  ? 18.40
 -1.40562890E+03 a0
  1.41171900E+03 a1
OK
Ch2  I1 (mA)  ? 5.60
Ch2  I2 (mA)  ? 18.40
 -1.40562890E+03 a0
  1.41171900E+03 a1
OK
>
```

The question mark is displayed after a certain stabilization time has expired. Only enter values after the question mark is displayed. Values entered before the question mark are discarded.

4.9 Configuring serial line operation

Table 22 SERI command

Syntax	Description
seri [b p d s]<cr> where b baud rate (9600, 19200, 38400, 76800, 115200) p parity (n = none, e = even, o = odd) d data bits (7 or 8) s stop bits (1 or 2)	Use the **seri** command to show or set the serial line settings for the serial port that you are currently using. Use the **SAVE** command after changing the settings to store them. The new settings will be taken into use when the transmitter is reset or powered up.

Syntax	Description
Examples	

```
>seri
Baud P D S      : 19200 N 8 1
>
```

```
>seri 9600 e 7 1
Baud rate           : 9600
Parity              : E
Data bits           : 7
Stop bits           : 1
>save
Saving settings...done
>
```

Table 23 ECHO command

Syntax	Description
echo [on] [off]<cr>	To show or set the terminal echo status, use the **echo** command.
Examples:	

```
>echo
COM1 Echo                : OFF
>
```

```
>echo on
COM1 Echo                : ON
```

Table 24 SMODE command

Syntax	Description
smode [stop/run]<cr>	Use the **smode** command to show or set the serial interface mode. Note that a separate **save** command is not needed to store the new serial interface mode setting. STOP mode — outputting only when command is issued, any command can be used. RUN mode — outputting automatically, only command **S** can be used.

Syntax	Description
Example:	

```
>smode stop
Output mode     : STOP
>
```

4.10 Measurement parameter configuration commands

Table 25 ENV command

Syntax	Description
`env [x.xxxx]<cr>` where x.xxxx Absolute pressure in the measuring environment. The default is **1.013**. The pressure unit is bar.	Use the **env** command to show or set the environmental compensation values. In HMT120, the humidity measurement can be compensated for ambient pressure. The value set with the **env** command is a permanent value which remains in use after a restart.

Examples:

```
>env
Pressure (bar)      : 1.013
>
```

```
>env 0.980
Pressure (bar)      : 0.98
>save
Saving settings...done
>
```

You can use the Vaisala Humidity Calculator to simulate the effect of pressure change to dew point. The Humidity Calculator is available at:

www.vaisala.com/humiditycalculator

4.11 Analog output configuration commands

Table 26 AERR command

Syntax	Description
aerr [level1 level2]<cr> where level 1 level 2 Error levels for analog output channel	Use the **aerr** command to show or set the analog output error levels.

Examples:

```
>aerr
Ch1 Error level     : 3.6
Ch2 Error level     : 3.6
>
```

```
>aerr 3.85 3.86
Ch1 Error level     : 3.85
Ch2 Error level     : 3.86
>
```

Table 27 ASEL command

Syntax	Description
asel [q1 q2] [lo1 hi1 lo2 hi2]<cr> where q1 q2 Analog output channel parameters [1)] lo1 lo2 Low limits of scaling hi1 hi2 High limits of scaling Syntax for single-parameter transmitters: **asel [q] [lo hi]<cr>** where q Analog output channel parameter lo Low limit of scaling hi High limit of scaling	After you have defined the measurement parameters with the **calcs** command, use the **asel** command to show or set the parameter output by the analog channels, and the scaling that is used. If you do not enter scaling limits, default values are used. Valid parameters are: **RH**, **T**, **TD**, **TDF**, **A**, **X**, **H**, **TW**, **PWS**, **PW**, and **NONE**. The **NONE** parameter disables analog output and output is forced to error level.

Syntax	Description
Examples:	

```
>asel
Ch1 Quantity        : RH
RH lo               : 0
RH hi               : 100
Ch2 Quantity        : T
T lo                : -60
T hi                : 100
>
```

```
>asel rh td
Ch1 Quantity        : RH
RH lo               : 0
RH hi               : 100
Ch2 Quantity        : TD
T lo                : -40
T hi                : 60
>
```

```
>asel t td 0 60 -20 60
Ch1 Quantity        : T
T lo                : 0
T hi                : 60
Ch2 Quantity        : TD
Td lo               : -20
Td hi               : 60
>
```

```
>asel rh none
Ch1 Quantity        : RH
RH lo               : 0
RH hi               : 100
Ch2 Quantity        : NONE
>
```

```
>asel none none
Ch1 Quantity        : NONE
Ch2 Quantity        : NONE
>
```

1) *Measurement parameters are referred to as 'quantities' in the transmitter's software.*

Table 28 ATEST command

Syntax	Description
`atest [val1 val2]<cr>` where val1 val2 Analog channel output value (mA)	Use the **atest** command to test the analog outputs. The **atest** command will force the output to the given value, which can then be measured with a calibrated multimeter. The **atest** command affects only the analog outputs and hence it does not disable measurement functions. **atest** without parameters will exit the test mode and let the measurement continue. It will also indicate the current analog output levels in normal measurement state

Examples:

```
>atest
CH1: 3.800000
CH2: 3.800000
>
```

```
>atest 3.9 3.9
CH1: 3.900000
CH2: 3.900000
>
```

4.12 Other commands

Table 29 DSEL command

Syntax	Description
`dsel [q1 q2]<cr>` where q1 q2 Measurement parameters to be shown on the transmitter display [1)] Syntax for single-parameter transmitters: **`dsel [q]<cr>`** where q Parameter to be shown on the transmitter display	After you have defined the measurement parameters with the **calcs** command, use the **dsel** command to show or set the displayed parameters. The number of parameters determines the display mode (that is, one or two rows). If one parameter is given, the display switches to one-row mode. If two parameters are given, the two-row mode is used. Valid parameters are: **RH**, **T**, **TD**, **TDF**, **A**, **X**, **H**, **TW**, **PWS**, and **PW**.

Syntax	Description

Examples:
`>dsel`
`1. quantity : RH`
`2. quantity : T`
`>`
 	
`>dsel rh t`
`1. quantity : RH`
`2. quantity : T`
`>`
 	
`>dsel t`
`1. quantity : T`
`>`	

1) *Measurement parameters are referred to as 'quantities' in the transmitter's software.*

Table 30 FORM command

Syntax	Description
`form <format><cr>` where **`format`** is a formatting string that consists of one of the following fields: “” String constant x.y Value length modifier. **x** is numbers before dot and **y** is numbers after dot. Ux Unit field length. U...U format is also supported. Q Measurement parameter name (for example, **rh**, **t**, or **td**) #t or \t Tabulator #r or \r Carriage return #n or \n Line feed (new line)	After you have defined the measurement parameters with the **calcs** command, use the **form** command to set the output format for the **send** and **r** commands. • Parameter must be after x.y and Ux modifiers. • There must be a space between parameters, **#r#n** or **\r\n** is not supported. • Max. string length is 80 characters. • If the **Ux** parameter is not used, unit is not displayed.

Syntax	Description
Examples:	

```
>form "RH= " 3.2 U2 rh #r #n
>send
RH= 32.16 %
>
```

```
>form "t=" 4.1 U3 t \t "rh=" 3.2 U2 rh \r \n
>send
t=  22.5 'C        rh= 29.12 %
>
```

```
>form "t=" 4.1 U3 t \t "rh=" rh \r \n
>send
t=  22.3 'C        rh=  29.5%
>
```

```
>form 3.2 UUU "RH=" rh \t "T=" t \r \n
>send
RH= 27.99  %       T= 23.34 'C
>
```

```
>form 3.3 rh " " t \r \n
>send
26.740  23.660
>
```

```
>form "->" "RH=" 3.2 U2 rh " " "T=" 3.1 U3 t #r #n
>send
->RH= 27.79 % T= 23.4 'C
>
```

Table 31 HELP command

Syntax	Description
help<cr>	Use the **help** command to display the list of available commands.

Table 32 ERRS command

Syntax	Description
errs<cr>	Use the **errs** command to display the currently active error codes. For troubleshooting active errors, see Error codes (page 64).

Syntax	Description
Example (no active errors):	

```
>errs
No errors.
>
```

Table 33 SAVE command

Syntax	Description
save<cr>	Use the **save** command to save changed settings to the transmitter FLASH memory. Most settings have to be saved or the changes are lost at the next reset or power down. The **smode** command saves the new serial mode immediately, and a separate **save** command is not needed. The probe calibration commands (**crh**, **ct**, **crhclr**, **ctclr**) store the parameters into the probe's memory automatically without a separate **save** command.
Example:	

```
>save
Saving settings...done
>
```

Table 34 RESTORE command

Syntax	Description
restore<cr>	Use the **restore** command to restore saved settings from transmitter FLASH memory to RAM. All unsaved changes will be lost.

```
>restore
Restoring default settings...done
>
```

Table 35 RESET command

Syntax	Description
reset<cr>	Use the **reset** command to reset the transmitter. Upon reset or power-up, the transmitter enters the serial mode that has been set with the **smode** command. After a reset, the configuration is loaded from FLASH memory. This configuration can be altered by saving different settings with the **save** command.

Example: Transmitter set to serial mode STOP, will output transmitter software version at reset
`>reset`
`HMT120 / 0.1.0.001`
`Type "help" for command list`
`>`	

Table 36 FRESTORE command

Syntax	Description
frestore<cr>	Use the **frestore** command to restore the factory settings to the transmitter. All user settings, including the user-performed calibration corrections, will be lost. The transmitter will revert back to the factory calibrated settings. Note that this only returns the factory settings of the transmitter and not of the interchangeable probe (see Table 18 (page 38) and Table 20 (page 39)).

Example:
`>frestore`
`Restoring factory defaults...done`
`>`	

Table 37 UNIT command

Syntax	Description
unit [metric/ non_metric]<cr>	Use the **unit** command to show or set the output unit (metric or non-metric).

Syntax	Description
Examples:	

```
>unit
Unit                : METRIC
>
```

```
>unit non_metric
Unit                : NON_METRIC
>
```

5. Maintenance

5.1 Removing and fastening fixed probe

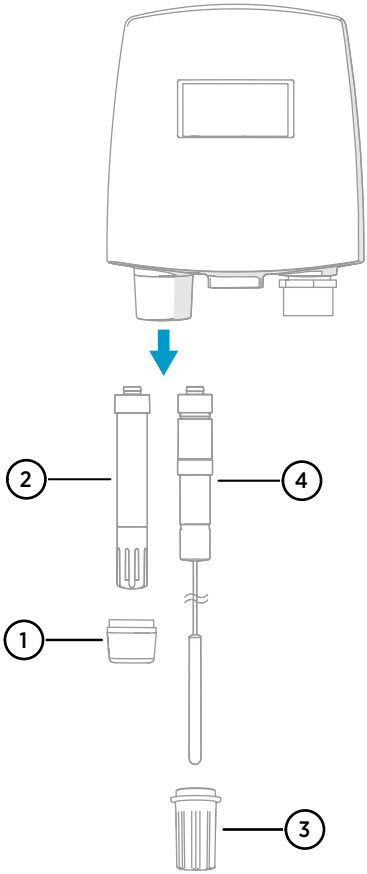

Figure 13 Removing the probe (fixed probe model)

1 Locking bushing
2 HMP110, HMP110T or HMP113 probe (HMP113 shown)
3 Probe nut
4 TMP115 probe

To remove or replace the probe:

1. Loosen the part that locks the probe in place by carefully turning it counterclockwise.
   - HMP110(T) and HMP113 probes are locked in place by a metal locking bushing (number 1 in the figure).
   - TMP115 probes are locked in place by a plastic probe nut (number 3 in the figure).

2. Remove the probe from the transmitter by pulling it gently downwards.
3. Verify the orientation of the connector pins and push the new probe to the 4-pin M8 panel connector of the transmitter (only one position possible).
4. Secure the probe by turning the locking bushing (for HMP110(T) and HMP113 probes) or probe nut (for TMP115 probe) clockwise.

5.2 Removing and fastening remote probe

To remove or replace the probe:

1. Unscrew the locking ring that secures the probe in place at the end of the probe connection cable and pull out the probe.
2. Replace the probe and screw the locking ring back on, securing the probe tightly in place.

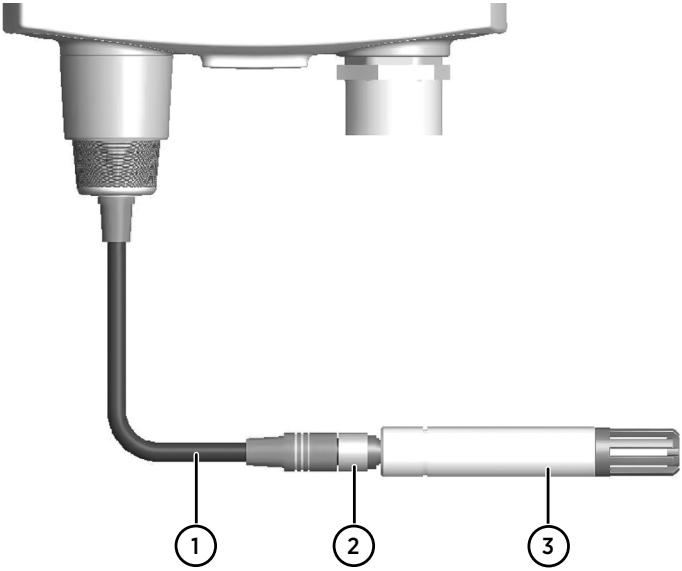

Figure 14 Removing the probe (remote probe model)

1 Probe connection cable
2 Locking ring securing the probe to the cable
3 Probe

5.3 Testing analog outputs

The transmitter has a built-in software function for testing analog outputs. To test the outputs:

1. Make sure the transmitter is not in adjustment mode (see Calibration and adjustment overview (page 55)).
2. Press the **+** adjustment button (see Figure 11 (page 25)).

   This sets the output current level to the high point of the analog output range (20 mA nominal). The output stays at this level for about 30 seconds after the **+** adjustment button has been pressed.
3. Press the **-** adjustment button.

   This sets the output current level to the low point of the analog output range (4 mA nominal). The output stays at this level for about 30 seconds after the **-** adjustment button has been pressed.

HMT120 analog output current can be measured without removing the wires from the screw terminals by using a low-impedance multimeter between the associated + terminal and test point (CH1 or CH2) on the component board (see Figure 15 (page 53)).

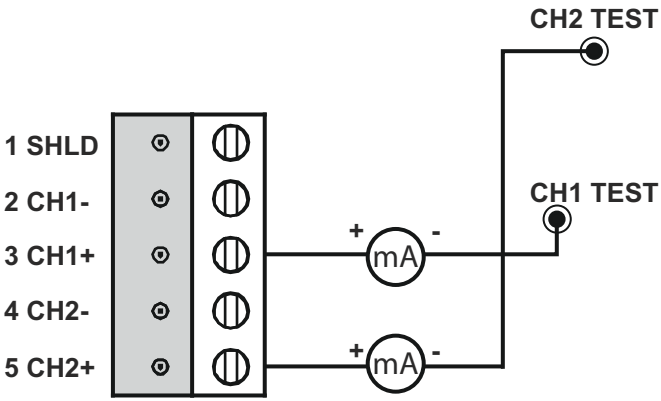

Figure 15 HMT120 output current measurement

If your transmitter has the optional display, the following texts are shown on the display the during analog output test:

- **Analog output test high**: analog output set to upper limit (20 mA)
- **Analog output test low**: analog output set to low limit (4 mA)

5.4 Replacing the HUMICAP sensor

To replace the HUMICAP® humidity sensor on a fixed or remote probe:

1. Remove the filter (plastic grid or sintered stainless steel).
2. Remove the damaged sensor and insert a new one.
3. Recalibrate the probe.
4. If the filter is dirty, replace it to ensure maximum lifetime and fast sensor response. Do not attempt to clean the filter.

More information

- Calibration and adjustment overview (page 55)

6. Calibration and adjustment

6.1 Calibration and adjustment overview

You can calibrate and adjust the transmitter using the following tools:

- Push buttons on the transmitter component board
- Serial line commands
- Portable humidity meter HM70

A calibrator kit is needed for calibration against saturated salt solutions. The HMK15 Humidity Calibrator and pre-measured certified salts are available from Vaisala. For further information, please contact your Vaisala representative.

Vaisala Service Centers also offer accredited calibrations for humidity and temperature.

You can also remove the HMP110 series probe and replace it with a new one. The old probe can be adjusted using another transmitter body, if you have one available.

RH field calibration and adjustment, as instructed in this document, is restricted to a certain adjustment range to minimize the effects of special circumstances, such as chemical contamination. In case the probe is outside its adjustment/trim range due to, for example, chemical exposure, the calibration cannot be completed. In this case, it is recommended that you change the probe or contact Vaisala technical support.

More information

- Push-button calibration (page 55)
- Calibration commands (page 37)
- Adjusting RH and T with MI70 handheld indicator (page 59)

6.2 Push-button calibration

You can calibrate and adjust the transmitter with the adjustment buttons on the transmitter component board.

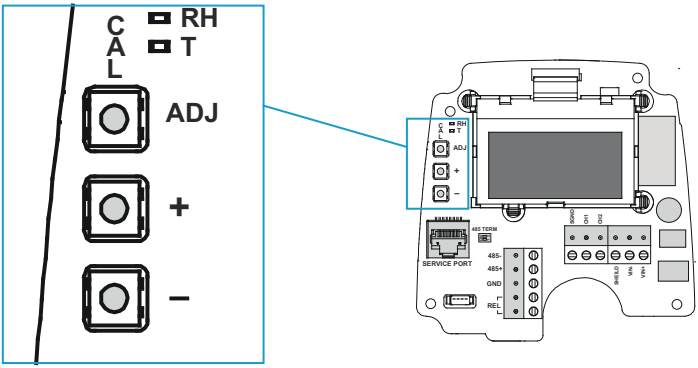

Figure 16 Adjustment buttons

HMT transmitters with a humidity and temperature probe: The 2-point humidity adjustment is carried out by using two relative humidity references: for example, saturated salt points 11 %RH (LiCl) and 75 %RH (NaCl). The difference between the two humidity reference points must be at least 30 %RH. The difference between the two temperature reference points must be at least 30 °C (86 °F).

> In push-button calibration of HMT transmitters, the transmitter outputs are by default relative humidity in the range 0 ... 100 %RH in CH1 and temperature in the range −40 ... +80 °C (−40 ... +176 °F) in CH2 regardless what the actual transmitter settings are. Outputs mean in this case both the display and analog current outputs.

TMT transmitters with a temperature-only probe: You can only calibrate temperature.

> With TMT transmitters, the push button calibration is only available in the range −40 ... +80 °C (−40 ... +176 °F) in CH1. For other ranges, use other calibration methods, such as serial commands. You can also calibrate the probe connected to the transmitter. For more information, see the probe user guide at docs.vaisala.com.

6.2.1 Adjusting humidity and temperature with push buttons

The instructions here apply to both 1-point and 2-point calibration.

To make a humidity or temperature adjustment:

1. Open the transmitter cover. There are 3 buttons marked **ADJ**, **+** and **-** on the component board. There are also two indicator LEDs, one green and one red.

2. Press the **ADJ** button and hold it down until the green indicator LED begins to blink slowly (800 ms cycle time).
3. The transmitter is now in RH calibration state. Analog output and optional display will still follow the actual measured RH value.

> If you are calibrating only temperature or do not wish to perform the RH adjustment at this time, press the **ADJ** button one more time. The green indicator LED turns off and the red indicator LED begins to blink slowly (800 ms cycle time) to indicate T calibration state. To calibrate T, follow the instructions starting from step 7.

4. Remove the filter and insert the probe into a measurement hole of the dry end reference chamber (for example, LiCl: 11 %RH) to do the low humidity offset adjustment.

> Do not touch the adjustment buttons before the conditions have stabilized. This takes approximately 30 minutes.

5. Press either the **-** or **+** button at least once, make sure that the I_{out} current is correct, adjust using the **-** and **+** buttons if needed, and press the **ADJ** button again. The green indicator LED begins to blink faster (400 ms cycle time).

> If you do not wish to perform the two-point RH adjustment at this time, press the **ADJ** button one more time. The green indicator LED turns off and the red indicator LED begins to blink slowly (800 ms cycle time) to indicate T calibration state. To calibrate T, follow the instructions starting from step 7. If one-point calibration is done at more than 50 %RH, a gain adjustment is done instead of an offset adjustment.

6. Insert the probe into the high end reference chamber (for example, NaCl: 75 %RH chamber in the humidity calibrator HMK15) and do the high humidity gain adjustment by using the - and + buttons to make sure the I_{out} current is correct (you have to press either **-** or **+** at least once even if the value is correct). To finish the RH calibration, press the **ADJ** button. The green LED is now turned off and the red indicator LED begins to blink slowly (800 ms cycle time).
7. The transmitter is now in T calibration state. Analog output and optional display will still follow the actual measured T value.

> If you do not wish to perform the T adjustment at this time, press **ADJ** button one more time. The red indicator LED is turned off and the transmitter returns to normal mode. The calibration procedure is now finished.

8. Insert the probe into a known reference temperature (if Vaisala Humidity Calibrator HMK15 is not used) and let the temperature reading stabilize.

> Do not touch the adjustment buttons before the conditions have stabilized.

9. Using the **-** and **+** buttons, make the temperature offset adjustment by making sure the I_{out} current is correct (you have to press either **-** or **+** at least once even if the value is correct) and press the **ADJ** button. The red indicator LED begins to blink faster (400ms cycle time).

> If you do not wish to perform the two-point T adjustment at this time, press the **ADJ** button one more time. The red indicator LED is turned off and the transmitter returns to normal mode. The calibration procedure is now finished.

10. Insert the probe into another reference temperature.

> Do not touch the adjustment buttons before the conditions have stabilized.

11. Using the **-** and **+** buttons, make the temperature gain adjustment by making sure the I_{out} current is correct (you have to press either **-** or **+** at least once even if the value is correct).
12. Press the **ADJ** button one more time. The red indicator LED turns off and the transmitter returns to normal mode. The calibration procedure is now finished.

> In case of calibration error, both LEDs blink alternately at a very fast rate (cycle time 200ms) for a period of 2s after which the transmitter returns to normal mode.

> If your transmitter has the optional display, the following notifications are shown on the display during calibration:
> - **Probe cal: RH 1** (corresponding the green LED blinking slowly)
> - **Probe cal: RH 2** (corresponding the green LED blinking fast)
> - **Probe cal: T1** (corresponding the red LED blinking slowly)
> - **Probe cal: T2** (corresponding the red LED blinking fast)
> - **Probe cal: Error** (corresponding both LEDs blinking alternately at very fast rate)

6.3 Adjusting RH and T with MI70 handheld indicator

- MI70 handheld indicator (included in, for example, the HM70 package)
- MI70 connection cable (Vaisala item code 211339)

You can check and adjust the transmitter's relative humidity and temperature measurement with the MI70 handheld indicator, which is included in the HM70 handheld humidity and temperature meter.

There are four types of adjustments available:
- Field checking and adjustment using a calibrated reference probe
- 1-point adjustment using a calibrator,
- 2-point adjustment using a calibrator,
- LiCl-NaCl adjustment

Start the adjustment by completing the first 7 steps and then continue according to the chosen adjustment method.

1. Connect the HM70 connection cable (211339) to the **SERVICE PORT** connector on the transmitter's component board (see Figure 11 (page 25)).
2. Connect the other end of the connection cable to either of the MI70 connector ports (port I or port II) located on the bottom of the indicator.

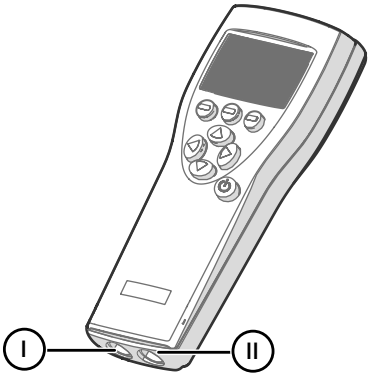

3. Turn on both devices (or just the MI70 indicator if the transmitter is on continuously).
4. The reading of the transmitter is shown on the top or middle row of the indicator display, depending on which connector port the connection cable is connected to.

5. Press the **ADJ** button on the transmitter's component board to open the adjustment mode. Both LEDs on the component board remain in **OFF** state and the text "**Starting adjustment mode for HMP110**" is shown on the MI70 display.

> In transmitters with the optional display, the text **MI70 adjustment mode** is shown on the upper row of the display.

> From this point onward, the transmitter's local adjustment buttons are disabled and adjustment is carried out using the MI70 indicator. The transmitter display and analog outputs will always follow the actual measured RH/T value when in MI70 adjustment mode. When operating the MI70, do not press the buttons too quickly or the calibration may fail. Wait for one second between each press.

6. Press **OK** to start the adjustment.
7. Check the environment settings if needed. Otherwise, press **NO**. Select **RH adjustment** or **T adjustment**.
8. Continue according to the instructions for one of the following adjustment methods:
   - Field checking and adjustment using a calibrated reference probe (page 60)
   - 1-point adjustment using a calibrator (page 61)
   - 2-point adjustment using a calibrator (page 61)
   - LiCl-NaCl adjustment (page 62)
   - Temperature field check and adjustment using a calibrated reference probe (page 63)

6.3.1 Field checking and adjustment using a calibrated reference probe

> Complete the steps listed in Adjusting RH and T with MI70 handheld indicator (page 59) before continuing with this adjustment option.

1. Check that the probes are located in equal conditions and wait until the readings have stabilized (can take 30 minutes or more). If you are close to the probes, do not breathe in their direction.
2. Press **ADJUST** to continue adjusting.
3. Choose **To same as RHI/II** from the MI70 adjustment menu and press **SELECT**. MI70 automatically recognizes which port the HMP70 series probe is connected to.
4. Press **YES** to confirm the adjustment.
5. Turn off the MI70 and detach the connection cable.

6.3.2 1-point adjustment using a calibrator

Complete the steps listed in Adjusting RH and T with MI70 handheld indicator (page 59) before continuing with this adjustment option.

1. Remove the filter from the transmitter's probe and insert the probe head into the reference condition.
2. Press **ADJUST** to continue adjusting.
3. Choose **1-point adjustment** from the MI70 adjustment menu and press **SELECT**.

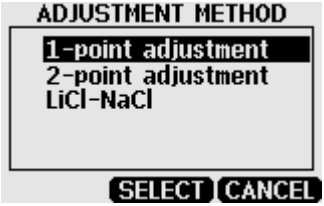

4. Press **READY** when the reading has stabilized in the reference condition (can take 30 minutes or more). You can follow the stabilization from the **GRAPH** display.

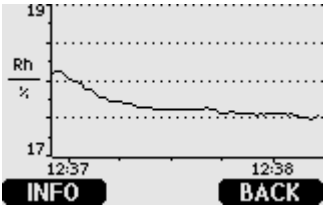

5. Enter the correct reference value with the arrow buttons and press **OK**.
6. Confirm the adjustment by pressing **YES**.
7. The adjustment is done. Press **BACK** and **EXIT** to return to the basic display.
8. Turn off the MI70 and detach the connection cable.

6.3.3 2-point adjustment using a calibrator

Complete the steps listed in Adjusting RH and T with MI70 handheld indicator (page 59) before continuing with this adjustment option.

When making a 2-point adjustment, the difference between the two reference conditions must be at least 50 %RH. If the difference is < 50 %RH, the adjustment cannot be made.

1. Remove the filter from the transmitter's probe and insert the probe head into the lower reference condition.
2. Press **ADJUST** to continue adjusting.
3. Choose **2-point adjustment** from the MI70 adjustment menu and press **SELECT**.
4. Press **READY** when the reading has stabilized in the first reference condition (can take 30 minutes or more). You can follow the stabilization from the **GRAPH** display.
5. Enter the correct reference value of the first condition with the arrow buttons and press **OK**.
6. Remove the probe from the first reference condition and insert the probe head into the higher humidity reference condition.
7. Press **READY** when the reading has stabilized in the second reference condition (can take 30 minutes or more). You can follow the stabilization from the **GRAPH** display.
8. Enter the correct reference value of the second condition with the arrow buttons and press **OK**.
9. Confirm the adjustment by pressing **YES** (by pressing **NO** you return to adjustment mode display and no changes are made). If the difference between the two reference conditions is less than 50 %RH, adjustment cannot be done.
10. Turn off the MI70 and detach the connection cable.

6.3.4 LiCl-NaCl adjustment

Complete the steps listed in Adjusting RH and T with MI70 handheld indicator (page 59) before continuing with this adjustment option.

This adjustment is made using relative humidity references 11.3 % RH (LiCl) and 75.5 % RH (NaCl).

1. Remove the filter from the transmitter's probe and insert the probe head into the LiCl salt chamber.
2. Press **ADJUST** to continue adjusting.
3. Choose **LiCl-NaCl autom.** from the MI70 adjustment menu and press **SELECT**. Press **OK** to accept the note telling about references.
4. Press **READY** when the reading has stabilized in the LiCl salt chamber (can take 30 minutes or more). You can follow the stabilization from the **GRAPH** display.

5. Remove the probe from the LiCl salt chamber and insert the probe head into the NaCl salt chamber.
6. Press **READY** when the reading has stabilized in the NaCl salt chamber (can take 30 minutes or more). You can follow the stabilization from the **GRAPH** display.
7. Confirm the adjustment by pressing **YES** (by pressing **NO** you return to adjustment mode display and no changes are made).
8. The adjustment is done. Press **BACK** and **EXIT** to return to the basic display.
9. Turn off the MI70 and detach the connection cable.

6.3.5 Temperature field check and adjustment using a calibrated reference probe

Complete the steps listed in Adjusting RH and T with MI70 handheld indicator (page 59) before continuing with this adjustment option.

1. Check that the probes are located in equal conditions and wait until the readings have stabilized (can take 30 minutes or more). If you are close to the probes, do not breathe in their direction.
2. Press **ADJUST** to continue adjusting.
3. Choose **To same as THI/II** from the MI70 adjustment menu and press **SELECT**. MI70 automatically recognizes which port the HMP70 series probe is connected to.
4. Press **YES** to confirm the adjustment.

   If the temperature difference between the reference probe and the transmitter is too large, the adjustment cannot be done (MI70 notifies you of this). The available reserve for T adjustment of the transmitter depends on the initial temperature calibration of the unit.

5. The adjustment is done. Press **BACK** and **EXIT** to return to the basic display.
6. Turn off the MI70 and detach the connection cable.

7. Troubleshooting

7.1 Error codes

The transmitter's software provides a variety of self diagnostics information, for example, FLASH and program memory checksum, probe communication status, probe checksum, operation voltage check, and oscillator fault check.

At startup, the transmitter's software checks the factory/user settings checksum, program memory checksum, and oscillator fault status. Other checks are made during runtime. Possible error codes are listed in Table 38 (page 64).

Table 38 Error codes, descriptions, and texts

Code	Description	Error text
1	Probe T measurement error	Probe T meas
2	Probe RH measurement error	Probe RA meas
3	Probe communication error	Probe communication
4	Probe checksum error	Probe checksum
5	Probe message form error	Probe message form
6	Program's flash checksum error	Program code checksum
7	Current settings checksum error (RAM)	Settings checksum
8	Factory FLASH not initialized	Factory defaults empty
9	User FLASH not initialized	User defaults empty
10	Voltage is too low to operate correctly	Voltage too low
11	Measurements not available	Measurements not available
12	Oscillator fault bit active	HW fault 1
13	Analog output quantity invalid [1)]	Analog output quantity invalid
14	Display quantity invalid	Display quantity invalid

1) Measurement parameters are referred to as 'quantities' in the transmitter's software.

You can view the error text with the **errs** serial line command. If you are using a transmitter with the optional display, the error code is shown on the display in the following format: **ERR:Code-1[.Code-2][.Code-n]**. Multiple errors are separated by a period (".") between the error codes.

7.2 Solving typical problems

You can check error messages with the **errs** serial line command. For a list of possible error messages, see Error codes (page 64). In case of constant error, contact Vaisala.

Table 39 Problems and solutions

Problem or message	Likely causes and solutions
Measurement not working, any of the following errors is active: • Probe RH measurement error • Probe T measurement error	• Sensor(s) damaged or missing. Open the probe filter and check. • Calibration is not done. Calibrate the probe. • Check the supply voltage of the transmitter.
Transmitter cannot communicate with the probe, any of the following errors is active: • Probe communication error • Probe checksum error • Probe message form error • Measurements not available	• Check the attachment of the probe to the transmitter. • In case of remote probe, check also the interconnection cables. • Replace the probe if necessary.
Serial line command not working, outputs **Unknown command**.	Mistyped or unknown command, check the command syntax and parameters.
Cannot connect to serial line, current serial settings of the module are unknown.	Perform the following steps to connect: 1. Set your terminal settings to **19200 8 N 1** (the default settings of the transmitter). 2. Connect to the service port of the transmitter. 3. Power up the transmitter, and type "**Z**" on the serial line at least five times. 4. The transmitter will come online with the default settings. 5. Use the **seri** serial line command to set the desired serial settings and save the settings with the **save** command.
Any of the following errors is active: • Current settings checksum error • Default settings checksum error	Internal error. Perform the following steps: 1. Reset or power cycle the module. Check if the error disappears. 2. Return the module to factory settings with the **frestore** serial line command. Check again. 3. If the error is still active, contact a Vaisala service center.
Any of the following errors is active: • Program checksum error • Factory flash defaults checksum error • Factory flash not initialized • Oscillator fault bit active	Faulty transmitter, contact a Vaisala service center.

Problem or message	Likely causes and solutions
Any of the following errors is active: • Analog output quantity invalid [1)] • Display quantity invalid	• In case of **Analog output quantity invalid** error, select the correct output quantities (set with the **calcs** command) with the **asel** command. • In case of **Display quantity invalid** error, select the correct display quantities with the **dsel** command.

1) Measurement parameters are referred to as 'quantities' in the transmitter's software.

7.3 Analog output error notification

If the transmitter is unable to operate due to an error, the analog outputs are set to an error level.

The default output voltage in error state is 3.6 mA.

The error voltage value can be changed using the serial interface (**aerr** serial line command): see Analog output configuration commands (page 43).

8. Technical data

8.1 HMT120 specifications

Table 40 HMT120 measurement performance

Property	Description/Value
Relative humidity	
Measurement range	0–100 %RH
Accuracy [1) 2)]	
At 0 ... +40 °C (+32 ... +104 °F)	±1.5 %RH (0–90 %RH) ±2.5 %RH (90–100 %RH)
With HMP110 probe: At −40 ... 0 °C and +40 ... +80 °C (−40 ... +32 °F and +104 ... +176 °F) With HMP113 probe: At −40 ... 0 °C and +40 ... +60 °C (−40 ... +32 °F and +104 ... +140 °F)	±3.0 %RH (0–90 %RH) ±4.0 %RH (90–100 %RH)
Factory calibration uncertainty at +20 °C (+68 °F)	±1.1 %RH (0–90 %RH) ±1.8 %RH (90–100 %RH)
Humidity sensor types	HUMICAP® 180R HUMICAP® 180V [3)]
Stability	±2 %RH over 2 years
Stability in typical HVAC applications	±0.5 %RH per year
Temperature	
Measurement range	HMP110: −40 ... +80 °C (−40 ... +176 °F) HMP113: −40 ... +60 °C (−40 ... +140 °F)
Temperature sensor	Pt1000 RTD Class F0.1 IEC 60751
Accuracy over temperature range:	
HMP110:	
At +15 ... +25 °C (+59 ... +77 °F)	±0.1 °C (±0.18 °F)
At 0 ... +15 °C and +25 ... +40 °C (+32 ... +59 °F and +77 ... +104 °F)	±0.15 °C (±0.27 °F)
At −40 ... +0 °C and +40 ... +80 °C (−40 ... +32 °F and +104 ... +176 °F)	±0.4 °C (±0.72 °F)

Property	Description/Value
HMP113:	
At 0... +40 °C (+32 ... +104 °F)	±0.2 °C (±0.36 °F)
At −40 ... 0 °C and +40 ... +60 °C (−40 ... +32 °F and +104 ... +140 °F)	±0.4 °C (±0.72 °F)
Other output parameters (optional)	
Dew point/frost point, wet bulb temperature, enthalpy, absolute humidity, mixing ratio, vapor pressure, saturation vapor pressure	

1) *Including non-linearity, hysteresis, and repeatability.*
2) *With HUMICAP® 180V sensor, accuracy is specified only in operating temperature −20 ... +80 °C (−4 ... +176 °F).*
3) *Not available with HMP113.*

Table 41 HMT120 operating environment

Property	Description/Value
IP rating (transmitter body)	IP65 [1)]
Operating temperature of transmitter body, no display	−40 ... +60 °C (−40 ... +140 °F)
Operating temperature of transmitter body with display	−20 ... +60 °C (−4 ... +140 °F)
Operating temperature, probe	HMP110: −40 ... +80 °C (−40 ... +176 °F) HMP113: −40 ... +60 °C (−40 ... +140 °F)
Storage temperature	−50 ... +70 °C (−58 ... +158 °F)

1) *IP65 for the HMP110 probe only when using stainless steel sintered filter (HM46670SP) or PTFE sintered filter (item code DRW244938SP).*

Table 42 HMT120 inputs and outputs

Property	Description/Value
HMT120 2-wire transmitter (loop-powered)	
Current output signals	4–20 mA
External loop voltage	10–30 V DC (R_L = 0 Ω) 20–30 V DC (R_L < 500 Ω)
Max. additional error caused by the analog outputs after calibration at +20 °C (+68 °F) ambient temperature	±0.1 % of FS output signal

Property	Description/Value
Temperature dependence of the analog outputs	±0.005 % of FS output signal

Table 43 HMT120 mechanical specifications

Property	Description/Value
Weight	270 g (9.5 oz)
Probe connection cable lengths	3 m, 5 m, 10 m - up to 50 m (9.8 ft, 16 ft, 33 ft - up to 164 ft)
Display (optional)	128 × 64 resolution full graphics B&W display without backlight
Material	
Transmitter housing	PBT plastic
Display window	PC plastic
Probe body	HMP110: Stainless steel (AISI 316) HMP113: PC/ABS blend
Probe grid filter	HMP110: Chrome coated ABS plastic HMP113: PC (glass reinforced)
Connections	
Inputs and outputs	Screw terminals 0.5–1.5 mm^2 (AWG 20–AWG 15)
Probe interface	4-pin M8 female panel connector

8.2 TMT120 specifications

Table 44 TMT120 measurement performance

Property	Description/Value
Temperature	
Measurement range	HMP110T: −40 ... +80 °C (−40 ... +176 °F) TMP115: −196 ... +150 °C (−320 ... +302 °F)
Temperature sensor	Pt1000 RTD Class F0.1 IEC 60751
Accuracy over temperature range:	
HMP110T:	
At +15 ... +25 °C (+59 ... +77 °F)	±0.1 °C (±0.18 °F)

Property	Description/Value
At 0 ... +15 °C and +25 ... +40 °C (+32 ... +59 °F and +77 ... +104 °F)	±0.15 °C (±0.27 °F)
At −40 ... +0 °C and +40 ... +80 °C (−40 ... +32 °F and +104 ... +176 °F)	±0.4 °C (±0.72 °F)
TMP115:	
at −196 ... −90 °C (−320 ... −130 °F)	±2.5 °C (±4.5 °F)
at −90 ... −30 °C (−130 ... −22 °F)	±0.75 °C (±1.35 °F)
at −30 ... 0 °C (−22 ... +32 °F)	±0.5 °C (±0.9 °F)
at 0 ... +50 °C (+32 ... +122 °F)	±0.25 °C (±0.45 °F)
at +50 ... +90 °C (+122 ... +194 °F)	±0.75 °C (±1.35 °F)
at +90 ... +150 °C (+194 ... +302 °F)	±2.5 °C (±4.5 °F)

Table 45 TMT120 operating environment

Property	Description/Value
IP rating (transmitter body)	IP65 [1)]
Operating temperature of transmitter body, no display	−40 ... +60 °C (−40 ... +140 °F)
Operating temperature of transmitter body with display	−20 ... +60 °C (−4 ... +140 °F)
Operating temperature, probe	HMP110T: −40 ... +80 °C (−40 ... +176 °F) TMP115, sensor tip: −196 ... +150 °C (−320 ... +302 °F) TMP115, probe body: −40 ... +60 °C (−40 ... +140 °F)
Storage temperature	−50 ... +70 °C (−58 ... +158 °F)

1) *IP65 for the HMP110T probe only when using stainless steel sintered filter (HM46670SP) or PTFE sintered filter (item code DRW244938SP).*

Table 46 TMT120 inputs and outputs

Property	Description/Value
TMT120 2-wire transmitter (loop-powered)	
Current output signals	4–20 mA
External loop voltage	10–30 V DC (R_L = 0 Ω) 20–30 V DC (R_L < 500 Ω)

Property	Description/Value
Max. additional error caused by the analog outputs after calibration at +20 °C (+68 °F) ambient temperature	±0.1 % of FS output signal
Temperature dependence of the analog outputs	±0.005 % of FS output signal

Table 47 TMT120 mechanical specifications

Property	Description/Value
Weight	270 g (9.5 oz)
Probe connection cable lengths	3 m, 5 m, 10 m - up to 50 m (9.8 ft, 16 ft, 33 ft - up to 164 ft)
Display (optional)	128 × 64 resolution full graphics B&W display without backlight
Material	
Transmitter housing	PBT plastic
Display window	PC plastic
HMP110T probe body	Stainless steel (AISI 316)
HMP110T probe grid filter	Chrome coated ABS plastic
TMP115 probe body	PC/ABS blend
TMP115 probe cable	FEP
TMP115 sensor tip	Stainless steel (AISI 316)
Connections	
Inputs and outputs	Screw terminals 0.5–1.5 mm^2 (AWG 20–AWG 15)
Probe interface	4-pin M8 female panel connector

8.3 Spare parts and accessories

Information on spare parts, accessories, and calibration products is available online at vaisala.com and store.vaisala.com.

Table 48 HMT120 spare parts and accessories

Description	Item code
Probes [1)]	

Description	Item code
Humidity and temperature probe	HMP110
Constant output probe	HMP110REF
Humidity and temperature probe	HMP113
Sensors	
HMP110 and HMP113 probes:	
Standard humidity sensor	HUMICAP180R
Catalytic humidity sensor for H_2O_2	HUMICAP180V [2)]
Sensor protection	
HMP110 probe:	
Plastic grid filter	DRW010522SP
Plastic grid with membrane filter	DRW010525SP
Stainless steel sintered filter	HM46670SP
PTFE membrane filter with stainless steel grid	ASM212652SP
PTFE sintered filter	DRW244938SP
HMP113 probe:	
Plastic grid filter	DRW240185SP
Plastic grid with membrane filter	ASM210856SP
Stainless steel sintered filter	HM47280SP
Porous PTFE filter	219452SP
Probe installation	
HMP110 and HMP113 (remote probe models):	
Probe mounting clamp, 1 pc	225501
Probe mounting clamps, 10 pcs	226067
Probe mounting flange	226061
Probe holder, 5 pcs	ASM213382SP
Probe connection cables [3)]	
Probe connection cable 3 m (9.8 ft)	HMT120Z300
Probe connection cable 5 m (16 ft)	HMT120Z500
Probe connection cable 10 m (33 ft)	HMT120Z1000
Probe connection cable 20 m (66 ft)	HMT120Z2000

Description	Item code
Probe connection cable 5 m (16 ft), plenum-rated	HMT120Z500CMP
Probe connection cable 10 m (33 ft), plenum-rated	HMT120Z1000CMP
Probe connection cable 20 m (66 ft), plenum-rated	HMT120Z2000CMP
Other cables	
HM70 connection cable	211339
USB serial interface cable	219685
Transmitter protection and installation	
Radiation shield [3)]	DTR504A
Rain shield with installation kit	215109
Duct installation kit [3)]	215619

1) *See the separate HMP110 and HMP113 order forms.*
2) *Not available with HMP113.*
3) *For use with remote probe models.*

Table 49 TMT120 spare parts and accessories

Description	Item code
Probes [1)]	
Temperature-only probe	HMP110T
Wide-range temperature probe	TMP115 with a 3 m (9.8 ft) cable [2)]
Sensor protection	
HMP110T probe:	
Plastic grid filter	DRW010522SP
Plastic grid with membrane filter	DRW010525SP
Stainless steel sintered filter	HM46670SP
PTFE membrane filter with stainless steel grid	ASM212652SP
PTFE sintered filter	DRW244938SP
Probe installation	
Remote probe models with HMP110T:	
Probe mounting clamp, 1 pc	225501

Description	Item code
Probe mounting clamps, 10 pcs	226067
Probe mounting flange	226061
Probe holder, 5 pcs	ASM213382SP
Fixed probe models with TMP115:	
Probe nut, 5 pcs	DRW257207SP
Thermal dampener block	236310SP
Probe connection cables [3]	
Probe connection cable 3 m (9.8 ft)	HMT120Z300
Probe connection cable 5 m (16 ft)	HMT120Z500
Probe connection cable 10 m (33 ft)	HMT120Z1000
Probe connection cable 20 m (66 ft)	HMT120Z2000
Other cables	
HM70 connection cable	211339
USB serial interface cable	219685
Transmitter protection and installation	
Radiation shield [3]	DTR504A
Rain shield with installation kit	215109
Duct installation kit [3]	215619

1) *See the separate HMP110 and TMP115 order forms.*
2) *Length includes the TMP115 probe body and sensor tip.*
3) *For use with remote probe models.*

8.4 Transmitter dimensions

Fixed probe model dimensions are shown with HMP110 and TMP115 probes.

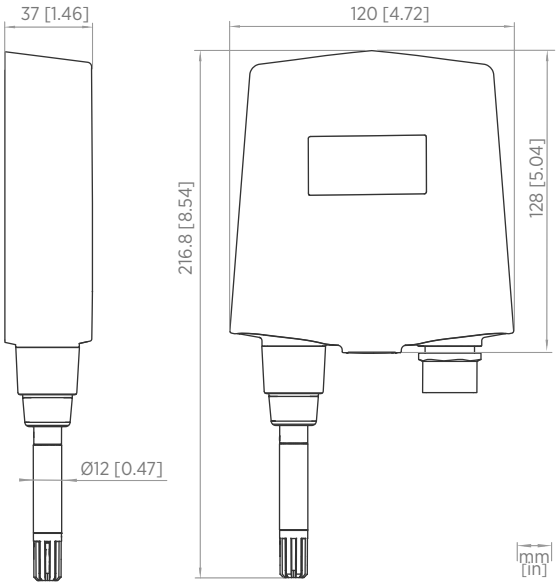

Figure 17 Fixed probe model dimensions in mm [in], with HMP110

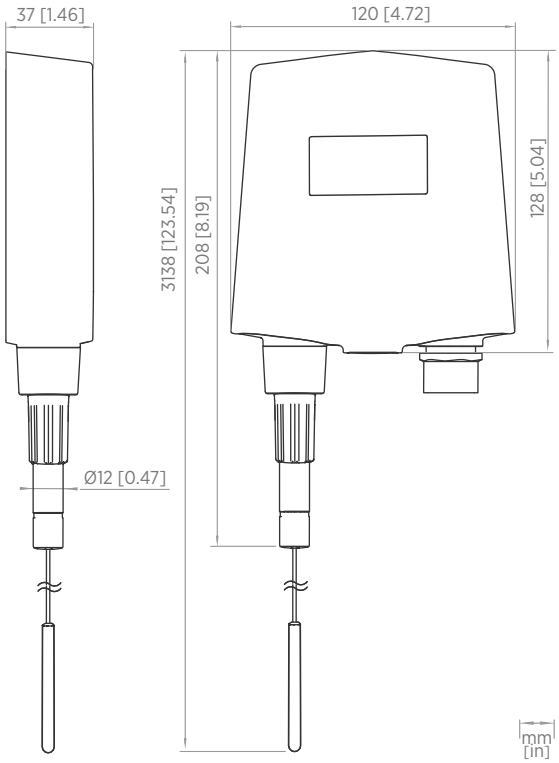

Figure 18 Fixed probe model dimensions in mm [in], with TMP115

Remote probe model dimensions are shown with HMP110.

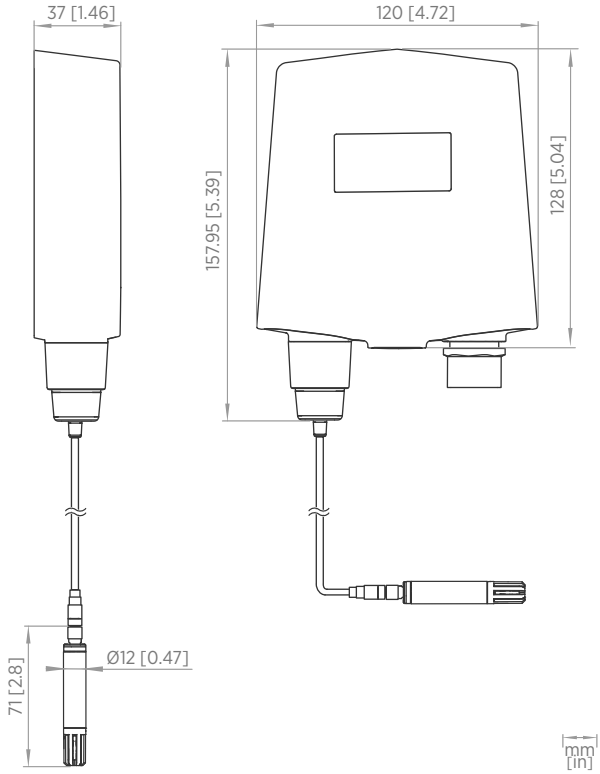

Figure 19 Remote probe model dimensions in mm [in], with HMP110

Appendix A. Calculation formulas

A.1 Calculation formulas overview

The transmitter receives the relative humidity and temperature values from the HMP110 probe. Based on these temperature and relative humidity values, the transmitter calculates dew point, frost point, absolute humidity, mixing ratio, enthalpy, wet bulb temperature, saturation vapor pressure and vapor pressure in normal pressure.

Symbols:

T_d	Dew point temperature (°C)
P_w	Water vapor pressure (hPa)
P_{ws}	Saturation vapor pressure (hPa)
RH	Relative humidity (%)
x	Mixing ratio (g/kg)
p	Atmospheric pressure (hPa)
a	Absolute humidity (g/m3)
T	Temperature (°C)
h	Enthalpy (kJ/kg)
T_w	Wet bulb temperature (°C)
T_{df}	Dew/frost point temperature (°C)

A.2 Dew point temperature

The dew point temperature (T_d) of a moist air sample is the temperature to which the sample must be cooled to reach saturation with respect to liquid water.

Dew point temperature (T_d) is calculated with the following formula:

$$T_d = \frac{\frac{Tn}{m}}{\log\left(\frac{Pw}{A}\right)} - 1 \qquad [°C]$$

Pw is the water vapor pressure (see the separate calculation formula for P_w). The parameters **A**, **m**, and **Tn** depend on the temperature as shown in Table 50 (page 78).

Table 50 Temperature dependence for A, m, and Tn

T	A	m	Tn
... 0 °C	6.119866	7.926104	250.4138
0 ... 50 °C	6.1078	7.5000	237.30
50 ... 100 °C	5.9987	7.3313	229.10

T	A	m	Tn
100 ... 150 °C	5.8493	7.2756	225.00
150 ... °C	6.2301	7.3033	230.00

A.3 Dew/frost point temperature calculation

Dew/frost point temperature (T_{df}) is calculated with the following formula:

$$T_d \geq 0 \rightarrow T_{df} = T_d$$

$$T_d < 0 \rightarrow T_{df} = \frac{\frac{Tn}{m}}{\log\left(\frac{Pw}{A}\right)} - 1 \qquad [°C]$$

Pw is the water vapor pressure (see the separate calculation formula for P_w). The parameters **A**, **m**, and **Tn** depend on the temperature as shown in Table 51 (page 79).

Table 51 Temperature dependence for A, m, and Tn

T	A	m	Tn
... 0 °C	6.1134	9.7911	273.47

A.4 Mixing ratio calculation

The mixing ratio (**x**, mass of water vapour/mass of dry gas) is calculated with the following formula:

$$x = B \times \frac{P_w}{p - P_w} \qquad [g/kg]$$

where

B 621.9907 g/kg

The value of B depends on the gas. 621.9907 g/kg is valid for air.

A.5 Saturation vapor pressure calculation

Saturation vapor pressure (P_{ws}) is the equilibrium water vapor pressure in a closed chamber containing liquid water. It is a function only of temperature, and it indicates the maximum amount of water that can exist in the vapor state.

Water vapor saturation pressure (P_{ws}) is calculated with the following 2 formulas:

$$\Theta = T - \sum_{i=0}^{3} C_i T^i \qquad [hPa]$$

where

T	Temperature in K
C_i	Coefficients
C_0	0.49313580
C_1	-0.46094296 * 10^{-2}
C_2	0.13746454 * 10^{-4}
C_3	-0.12743214 * 10^{-7}

$$\ln P_{ws} = T - \sum_{i=-1}^{3} b_i \Theta^i + b_4 \ln \Theta$$

where

b_i	Coefficients
b_{-1}	-0.58002206 * 10^{4}
b_0	0.13914993 * 10^{1}
b_1	-0.48640239 * 10^{-1}
b_2	0.41764768 * 10^{-4}
b_3	-0.14452093 * 10^{-7}
b_4	6.5459673

A.6 Water vapor pressure calculation

Vapor pressure refers to the vapor pressure of water in air or other gas. Water vapor has a partial pressure P_w which is part of the total pressure of the gas.

Water vapor pressure (**Pw**) is calculated with the following formula:

$$P_w = RH \cdot \frac{P_{ws}}{100} \qquad [hpa]$$

A.7 Absolute humidity calculation

Absolute humidity (**a**) is defined as the mass of water vapour in a certain volume. If ideal gas behaviour is assumed, the absolute humidity can be calculated using the following formula:

$$a = C \cdot \frac{P_w}{T + 273.15} \qquad \left[g/m^3\right]$$

where

C 216.679 gK/J

A.8 Enthalpy calculation

Enthalpy (**h**) can be calculated from the mixing ratio (**x**) using the following formula:

$$h = T \cdot (1.01 + 0.00189 \cdot x) + 2.5 \cdot x \qquad [kJ/kg]$$

A.9 Accuracies of calculated variables

Accuracies of the calculated variables depend on the calibration accuracy of the humidity and temperature sensors; here the accuracies are given for ±2 %RH and ±0.2 °C.

A.9.1 Accuracy of dew point temperature °C

Table 52 Accuracy of dew point temperature °C

	Relative humidity (%RH)									
Temp	**10**	**20**	**30**	**40**	**50**	**60**	**70**	**80**	**90**	**100**
-40 °C	1.86	1.03	0.76	0.63	0.55	0.50	0.46	0.43	—	—
-20 °C	2.18	1.19	0.88	0.72	0.62	0.56	0.51	0.48	—	—
0 °C	2.51	1.37	1.00	0.81	0.70	0.63	0.57	0.53	0.50	0.48
20 °C	2.87	1.56	1.13	0.92	0.79	0.70	0.64	0.59	0.55	0.53
40 °C	3.24	1.76	1.27	1.03	0.88	0.78	0.71	0.65	0.61	0.58
60 °C	3.60	1.96	1.42	1.14	0.97	0.86	0.78	0.72	0.67	0.64
80 °C	4.01	2.18	1.58	1.27	1.08	0.95	0.86	0.79	0.74	0.70
100 °C	4.42	2.41	1.74	1.40	1.19	1.05	0.95	0.87	0.81	0.76
120 °C	4.86	2.66	1.92	1.54	1.31	1.16	1.04	0.96	0.89	0.84
140 °C	5.31	2.91	2.10	1.69	1.44	1.26	1.14	1.05	0.97	0.91
160 °C	5.80	3.18	2.30	1.85	1.57	1.38	1.24	1.14	1.06	0.99

A.9.2 Accuracy of mixing ratio g/kg (ambient pressure 1013 mbar)

Table 53 Accuracy of mixing ratio g/kg (ambient pressure 1013 mbar)

	Relative humidity (%RH)									
Temp	**10**	**20**	**30**	**40**	**50**	**60**	**70**	**80**	**90**	**100**
-40 °C	0.003	0.003	0.003	0.003	0.003	0.004	0.004	0.004	—	—
-20 °C	0.017	0.018	0.019	0.021	0.022	0.023	0.025	0.026	—	—
0 °C	0.08	0.09	0.09	0.10	0.10	0.11	0.11	0.12	0.13	0.13
20 °C	0.31	0.33	0.35	0.37	0.39	0.41	0.43	0.45	0.47	0.49
40 °C	0.97	1.03	1.10	1.17	1.24	1.31	1.38	1.46	1.54	1.62
60 °C	2.68	2.91	3.16	3.43	3.72	4.04	4.38	4.75	5.15	5.58
80 °C	6.73	7.73	8.92	10.34	12.05	14.14	16.71	19.92	24.01	29.29
100 °C	16.26	21.34	28.89	40.75	60.86	98.85	183.66	438.56	—	—
120 °C	40.83	74.66	172.36	—	—	—	—	—	—	—

A.9.3 Accuracy of wet bulb temperature °C

Table 54 Accuracy of wet bulb temperature °C

	Relative humidity (%RH)									
Temp	**10**	**20**	**30**	**40**	**50**	**60**	**70**	**80**	**90**	**100**
-40 °C	0.20	0.20	0.20	0.20	0.20	0.20	0.20	0.20	—	—
-20 °C	0.21	0.21	0.22	0.22	0.22	0.22	0.23	0.23	—	—
0 °C	0.27	0.28	0.28	0.29	0.29	0.29	0.30	0.30	0.31	0.31
20 °C	0.45	0.45	0.45	0.44	0.44	0.44	0.43	0.43	0.42	0.42
40 °C	0.84	0.77	0.72	0.67	0.64	0.61	0.58	0.56	0.54	0.52
60 °C	1.45	1.20	1.03	0.91	0.83	0.76	0.71	0.67	0.63	0.60
80 °C	2.23	1.64	1.32	1.13	0.99	0.89	0.82	0.76	0.72	0.68
100 °C	3.06	2.04	1.58	1.31	1.14	1.01	0.92	0.85	0.80	0.75
120 °C	3.85	2.40	1.81	1.48	1.28	1.13	1.03	0.95	0.88	0.83
140 °C	4.57	2.73	2.03	1.65	1.41	1.25	1.13	1.04	0.97	0.91
160 °C	5.25	3.06	2.25	1.82	1.55	1.37	1.24	1.13	1.05	0.99

A.9.4 Accuracy of absolute humidity g/m^3

Table 55 Accuracy of absolute humidity g/m^3

	Relative humidity (%RH)									
Temp	**10**	**20**	**30**	**40**	**50**	**60**	**70**	**80**	**90**	**100**
-40 °C	0.004	0.004	0.005	0.005	0.005	0.006	0.006	0.006	--	-
-20 °C	0.023	0.025	0.027	0.029	0.031	0.032	0.034	0.036	-	-
0 °C	0.10	0.11	0.12	0.13	0.13	0.14	0.15	0.15	0.16	0.17
20 °C	0.37	0.39	0.41	0.43	0.45	0.47	0.49	0.51	0.53	0.55
40 °C	1.08	1.13	1.18	1.24	1.29	1.34	1.39	1.44	1.49	1.54
60 °C	2.73	2.84	2.95	3.07	3.18	3.29	3.40	3.52	3.63	3.74
80 °C	6.08	6.30	6.51	6.73	6.95	7.17	7.39	7.61	7.83	8.05
100 °C	12.2	12.6	13.0	13.4	13.8	14.2	14.6	15.0	15.3	15.7
120 °C	22.6	23.3	23.9	24.6	25.2	25.8	26.5	27.1	27.8	28.4
140 °C	39.1	40.0	41.0	42.0	43.0	44.0	45.0	45.9	46.9	47.9
160 °C	63.5	64.9	66.4	67.8	69.2	70.7	72.1	73.5	74.9	76.4

Index

A
absolute humidity calculation....80
accessories....13
accuracies of calculated variables....81
accuracy of absolute humidity g/m3....83
accuracy of dew point temperature °C....81
accuracy of mixing ratio g/kg (ambient pressure 1013 mbar)....82
accuracy of wet bulb temperature °C....82
adjusting humidity and temperature with push buttons....56
adjusting RH with MI70 handheld indicator...59
analog output configuration commands....43
analog output error notification....66

C
calculation formulas....78
calibration and adjustment commands....37
calibration and adjustment overview....55
connecting with a computer....28
constant output probe....14

D
device information and status....31
dew/frost point temperature calculation....79
dew point temperature calculation....78
drilling instructions for duct installation kit....23
duct installation....21

E
enthalpy calculation....81
error codes....64
ESD protection....16

F
fixed and remote probe models....12

H
HMT120 component board....25
HMT120 overview....12

I
installing with radiation shield....20
installing with rain shield....19
interchangeable probe....13
introduction....12

L
list of serial commands....30

M
maintenance: testing analog outputs....53
measurement parameter configuration commands....42
MI70 adjustment: 1-point adjustment with calibrator....61
MI70 adjustment: 2-point adjustment with calibrator....61
MI70 adjustment: field checking and adjustment using a calibrated reference probe....60
MI70 adjustment: LiCl- NaCl adjustment....62
MI70 adjustment: temperature field check and adjustment using a calibrated reference probe....63
mixing ratio calculation....79

O
opening transmitter cover....17
optional display....13
other serial line commands....45

P
probe assembly with duct installation kit....22
probe mounting clamp....23
probe mounting flange....24
push-button calibration....55

R

removing and fastening fixed probe..... 51
removing and fastening remote probe..... 52
replacing the HUMICAP sensor.....54

S

safety.....16
saturation vapor pressure calculation.....79
serial interface settings..... 27
serial line operation commands..... 40
serial line output and communication commands..... 35
service port.....27
solving typical problems.....65
spare parts and accessories.....71
specifications..... 67

T

trademarks.....11
transmitter dimensions.....75
transmitter parts.....14

U

USB driver..... 27
using service port.....27

W

wall mounting..... 17
water vapor pressure calculation.....80
wiring..... 26

Maintenance and calibration services

Vaisala offers comprehensive customer care throughout the life cycle of our measurement instruments and systems. Our factory services are provided worldwide with fast deliveries. For more information, see vaisala.com/calibration.

- Vaisala Online Store at store.vaisala.com is available for most countries. You can browse the offering by product model and order the right accessories, spare parts, or maintenance and calibration services.
- To contact your local maintenance and calibration expert, see vaisala.com/contactus.

Warranty

For standard warranty terms and conditions, see vaisala.com/warranty.
Please observe that any such warranty may not be valid in case of damage due to normal wear and tear, exceptional operating conditions, negligent handling or installation, or unauthorized modifications. Please see the applicable supply contract or Conditions of Sale for details of the warranty for each product.

Technical support

Contact Vaisala technical support at helpdesk@vaisala.com. Provide at least the following supporting information as applicable:

- Product name, model, and serial number
- Software/Firmware version
- Name and location of the installation site
- Name and contact information of a technical person who can provide further information on the problem

For more information, see vaisala.com/support.

Recycling

Recycle all applicable material according to local regulations.

VAISALA

www.vaisala.com

AKRIBIS · www.akribis.info · contacto@akribis.info