USER GUIDE

SmartObserverPlus-Series

Geolux

Distributed by AKRIBIS

SmartObserver

Data Logger

User Manual

v3.9.7

Copyright ©2023 Geolux d.o.o. All rights reserved.

Starting Point

Thank you for purchasing the Geolux SmartObserver data logger! We have put together the experience of our engineers, the domain knowledge of our customers, the enthusiasm of our team, and the manufacturing excellence to deliver this product to you.

You may freely rely on our field-proven technology. The use of top-quality components and advanced signal processing algorithms ensures that Geolux SmartObserver data logger can be used in various applications and environments.

We have created this User Manual to assist you in setting up and using the Geolux instrument.

Should there be any questions left unanswered, please feel free to contact us directly:

Geolux d.o.o.
Ljudevita Gaja 62
10430 Samobor
Croatia

E-mail: **geolux@geolux.hr**
Web: **www.geolux.hr**

Contents

1. Introduction **1**

2. Electrical Characteristics **2**

3. Installing the Data Logger **3**

3.1. GPRS Connectivity 3

3.2. Input Power Supply 3

3.3. Output Power 4

3.4. LED Indicators 4

4. Connecting Instruments to the SmartObserver Data Logger **5**

4.1. RS-232 Interface 5

4.2. CAN 6

4.3. RS-485 (Modbus) Interface 6

4.4. SDI-12 Interface 6

4.4. Digital GPIO Lines 6

4.5. Analog Voltage Inputs 7

4.6. Analog 4 – 20 mA Output 7

4.7. Analog Voltage Output 7

5. SmartObserver Settings **8**

6. Data Logger Configurator Utility **11**

7. SMS Diagnostics **14**

8. Troubleshooting **15**

9. Appendix A - Mechanical Assembly **17**

1 Introduction

The Geolux SmartObserver data logger is a highly-integrated device used to read the data from the attached instruments and deliver this data to Geolux Hydroview - a cloud-based data management software. The SmartObserver uses a GPRS connection for sending the data to the server, with other communication options such as LoRaWAN available on demand.

The SmartObserver data logger uses several data interfaces to communicate with the attached instruments. The primary interface is Modbus, and the data logger supports two Modbus lines. The data logger also contains two CAN bus lines, an SDI-12 bus, and an analog 4-20 mA interface.

The data logger contains internal Flash memory which is used to provide a data storage backup in case the wireless communication is disabled. Data stored inside internal Flash memory can be read by connecting the data logger to a PC through a RS-232 interface.

Integrated power management is an important feature of the SmartObserver data logger. An integrated battery charger allows the users to connect the data logger directly to a solar panel or a small wind turbine and to a battery. SmartObserver will take care of managing battery charging, thus eliminating the need to purchase and install a separate battery charger. The SmartObserver data logger supports different battery types, such as lead-acid, NiMH, NiCd, LiFePO4 and Li+.

All instruments within the monitoring station can be connected to the power supply through the SmartObserver data logger. SmartObserver contains three output power lines to power the instruments, and the data logger shuts down these two power lines between periodic measurements in order to reduce battery power consumption. Additionally, the secondary output power lines can be configured to conditionally power up, to further reduce power consumption – for example, it may make sense to disable some instruments under certain conditions, such as disabling surface velocity radars when the level meter detects that the river bed is dry.

2 Electrical Characteristics

The electrical characteristics of the Geolux SmartObserver data logger are given in Table 1.

Table 1. Electrical Characteristics

Parameter	MIN	TYP	MAX	Unit
Input voltage	9		27	VDC
Battery voltage	3		19.2	V
Standby current			1	mA
Operating current		100		mA
Operational temperature range	-40		+85	°C
Mechanical		161x97x20		mm
Weight		400		g

3 Installing the Data Logger

The SmartObserver data logger should be installed in a dry place, typically inside a suitable equipment cabinet.

3.1. GPRS Connectivity

To enable GPRS connectivity, the SIM card must be inserted into the data logger, and the GPRS antenna must be attached. The SmartObserver data logger uses the “micro SIM” format.

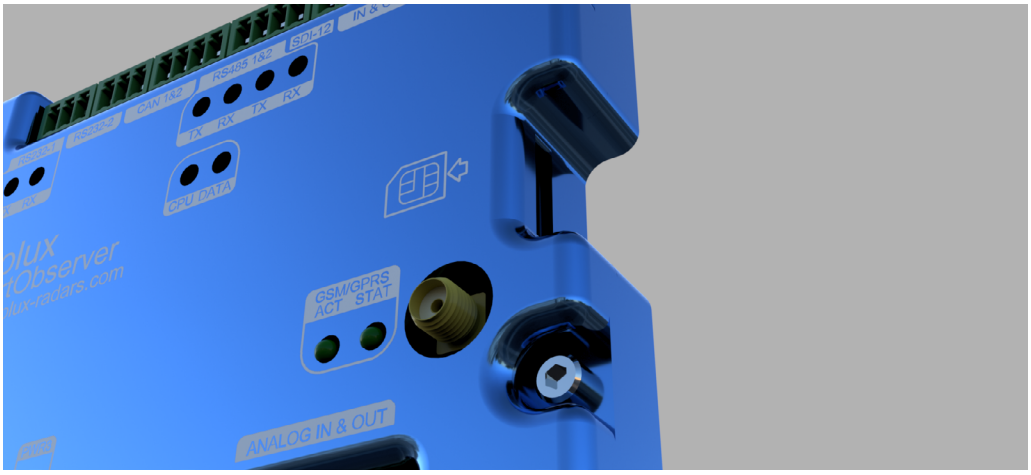

Picture 1. GPRS Connectivity

3.2. Input Power Supply

There are two input power supply lines available to the data logger as shown is Picture 2. One is marked with PWR-IN, and the other is marked with BAT. PWR-IN is used to connect to any non-battery power supply which provides 9 – 27 V. This can be an AC/DC converter, a solar panel, or a small wind turbine that will be used to charge the battery. The battery, which provides a voltage in the range of 3 – 19.2 V, should be connected to the BAT line. If the battery is not used, and the SmartObserver data logger is powered only by an AC/DC converter, then the AC/DC converter should be connected to the BAT line. In this case, the AC/DC converter should provide a voltage in the range of 3 – 19.2 V.

The following combinations are all allowed:

- If a power grid is available at the location, the data logger can be powered from the grid, by connecting the PWR-IN line to an AC-DC adapter with 12 V or 24 V output voltage.
- For remote locations, typically a solar panel is connected to the PWR-IN, and a battery is connected to the BAT line. The data logger will perform battery charging from the solar panel.
- In remote locations it is also possible to connect only a large battery to the BAT line, without a solar panel or wind turbine. In this case, the data logger will work until the battery runs out, and then the battery needs to be replaced. A 12 V 160 Ah battery is usually suitable for 6-12 months of independent operation, depending on the number of connected instruments.

3.3. Output Power

There are three output power lines, as show in Picture 2. They are labeled PWR1, PWR2 and PWR3. These lines are used as a power supply to the instruments connected to the data logger. The instruments at the monitoring site should be powered through the data logger, by connecting them to these lines, because the data logger turns off the power supply on these three lines between periodic measurements, in order to increase battery life.

Each of these three output lines outputs system voltage (it depends on the current battery and PWR-IN voltages), and the maximum output current is 1 A. When connecting the instruments to PWR1, PWR2 and PWR3 lines, consult the user manuals of the instruments to check the maximum current drain of all instruments on a power line, to make sure that 1 A current is not exceeded.

Picture 2. Input and Output Power Supply

3.4. LED Indicators

The following LED indicators on the data logger provide useful diagnostics information:

- Internal power (+5V, +3V, +6V) LEDs indicate that the internal power supply for various subsystems is active. Please note not all internal power systems will be active at all times while the data logger is operating.
- RS232-1 TX and RX LEDs indicate activity on RS232-1 communication interface. The TX LED will lit up every time the data logger sends some data over the RS232-1 interface, and the RX LED will lit up when the data logger receives some data over the RS232-1 interface.
- RS485 TX and RX LEDs indicate activity on both RS485-1 and RS485-2 interfaces. The TX LEDs indicate that the data logger is sending some data over the interfaces, and the RX LEDs indicate that data is being received by the data logger.
- CPU data LEDs – the left CPU LED should periodically blink every second, to indicate that the internal CPU is operational. The right CPU LED is active when the data logger is communicating with the instruments.
- PWR1, PWR2 and PWR3 LEDs indicate when output power line 1, output power line 2 and output power line 3 are active.
- GSM/GPRS ACT & STAT LEDs indicate GPRS modem activity; blinking of ACT LED indicates modem activity (communicating with the wireless network), and STAT LED indicates data transfer status.

4 Connecting Instruments to the SmartObserver Data Logger

The SmartObserver data logger supports multiple communication interfaces for interfacing instruments. Digital communication interfaces are located on the top part of the data logger as show in Picture 3. From left to right, there are two RS-232 lines, two CAN bus ports, two RS-485 (Modbus) lines, one SDI-12 interface, two general-purpose digital inputs and two general-purpose digital outputs.

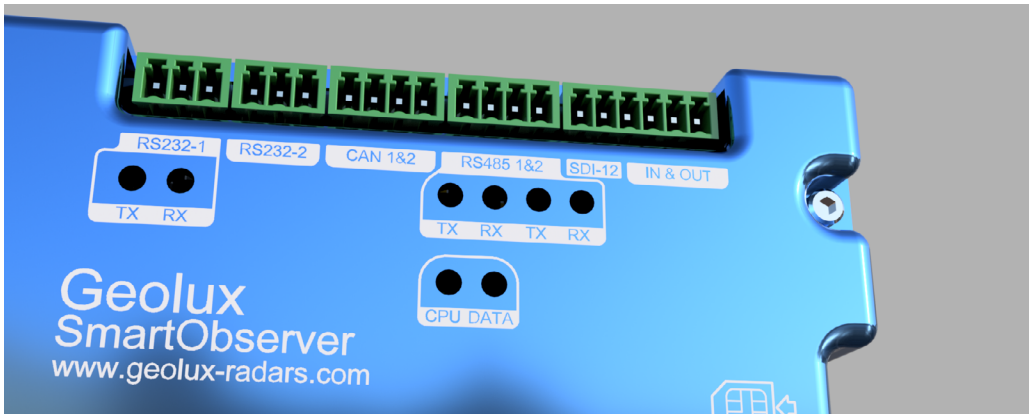

Picture 3. Digital Communication Interfaces

4.1. RS-232 Interface

There are two RS-232 lines on the SmartObserver data logger. The RS232-1 line is used to connect the data logger to the PC for data logger setup through the Geolux Instrument Configurator application, as described in chapter 6 of this manual. The RS232-2 line can be used to connect the Geolux HydroCam camera to the SmartObserver data logger. The HydroCam camera can also be connected to the RS232-1 line when the SmartObserver data loggr is not connected to the PC. When connecting the HydroCam camera, connect the green wire to the RXD pin, the yellow wire to the TxD pin and the grey wire to the GND pin. The pin-out is displayed in Picture 4.

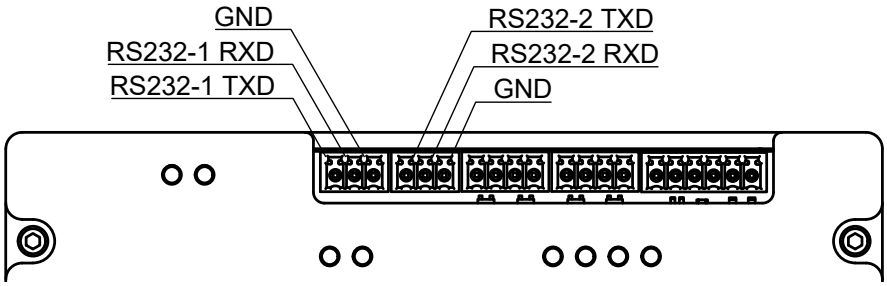

Picture 4. RS-232 Lines Pin-Out

4.2. CAN

The SmartObserver data logger contains two CAN ports. The pin-out can be seen in Picture 5.

4.3. RS-485 (Modbus) Interface

Two RS-485 (Modbus) ports are available on the SmartObserver data logger. The pin-out is shown in Picture 5.

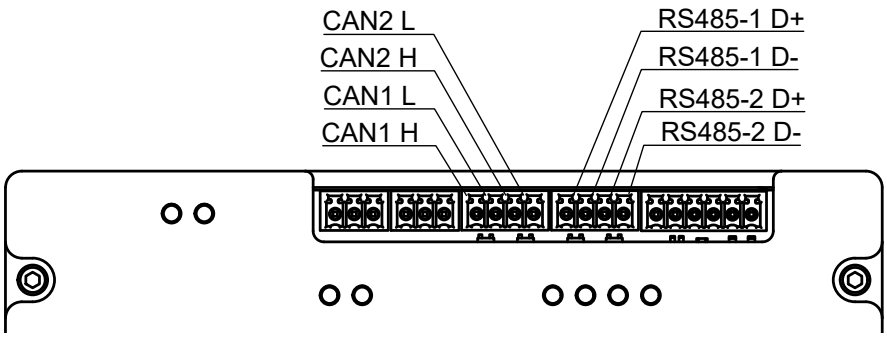

Picture 5. CAN and RS-485 Lines Pin-Out

4.4. SDI-12 Interface

The SDI-12 interface is also located on the upper part of the SmartObserver data logger. The pin-out is can be seen in Picture 6.

4.4. Digital GPIO Lines

The SmartObserver data logger contains two general-purpose digital outputs and two general-purpose digital inputs. These lines are currently not used and are reserved for future use. The pin-out is shown in Picture 6.

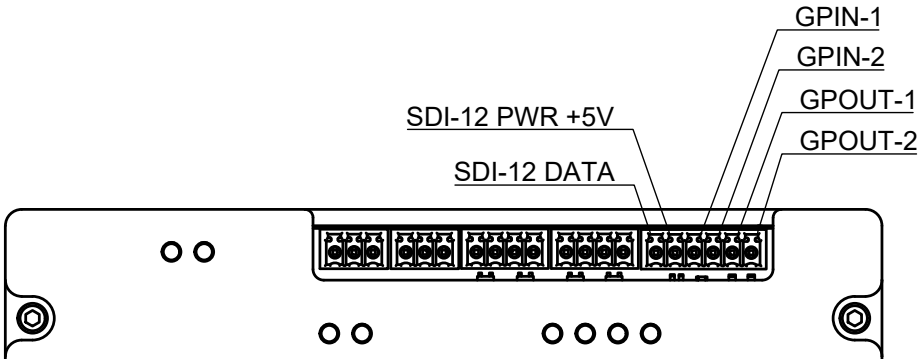

Picture 6. SDI-12 and Digital GPIO Pin-Out

Lines for interfacing analog instruments are located on the bottom part of the SmartObserver data logger, as shown in Picture 7. From left to right, there are two analog voltage inputs, one 4-20 mA interface and one analog output.

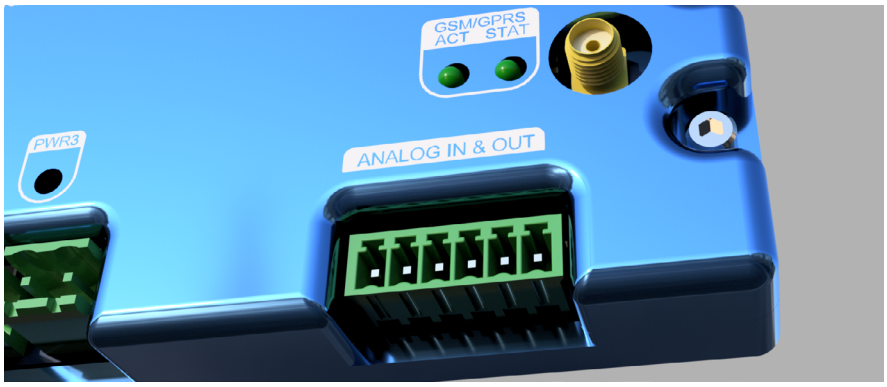

Picture 7. Analog Inputs and Outputs

4.5. Analog Voltage Inputs

The SmartObserver data logger contains two analog voltage inputs, ADC1 and ADC2, which can measure analog signal with voltage ranging up to 30 volts. The pin-out is shown in Picture 8.

4.6. Analog 4 – 20 mA Output

The SmartObserver's 4 – 20 mA interface is used to connect instruments compliant with industry-standard 4 – 20 mA. The pin-out can be seen in Picture 8.

4.7. Analog Voltage Output

The SmartObserver data logger contains one analog output pin which can output analog signal with voltage in the range of 0-5 V. This line is currently not used and is reserved for future use. The pin-out is shown in Picture 8.

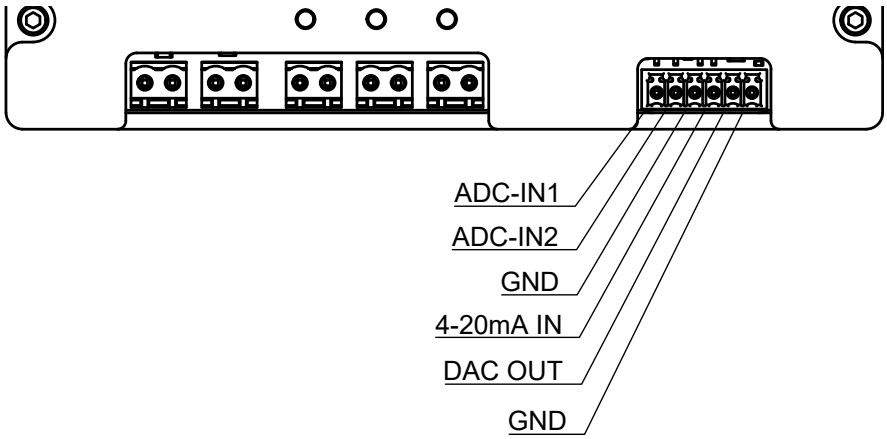

Picture 8. Analog Inputs and Outputs Pin-Out

5 SmartObserver Settings

To change the data logger's settings, connect the SmartObserver data logger to the PC computer, and start the Geolux Instrument Configurator PC application. Through the user interface of the application, the following parameters can be configured.

Logger Settings

Date and time

The data logger's internal clock can be set to the current time through the Geolux Instrument Configurator application which is described in chapter 6 of this user manual. It is important to note that the data logger does not have any special battery to keep the internal clock operating, so if the data logger is disconnected from the battery, the time and date will be reset.

GPRS Settings

APN

GPRS APN is defined by the mobile operator that provided the SIM car for the data logger. Make sure that the correct APN, as provided by the operator, is entered. If APN is missing or incorrect, it is possible that the data logger will not be able to establish an internet connection.

Username

The username for the GPRS connection that is defined by the mobile operator. Make sure that the correct username, as provided by the operator, is entered. If the username is missing or incorrect, it is possible that the data logger will not be able to establish an internet connection.

Password

The password for the GPRS connection that is defined by the mobile operator. Make sure that the correct password, as provided by the operator, is entered. If the password is missing or incorrect, it is possible that the data logger will not be able to establish an internet connection.

DNS

The IP address for the DNS server. It is typically provided by the mobile operator. If the mobile operator does not specify the DNS, you can use any of the public DNS servers (8.8.8.8, 8.8.4.4, or 1.1.1.1). On some networks, public DNS servers will not work, so make sure that you check this setting with the mobile operator.

Server address

This is the address and the port to the Geolux Hydroview server that will receive the data from the data logger. The address can be either a server name (such as *www.hydro-view.com*) or an IP address. The default port is 80 and should be entered after the colon character (*www.hydro-view.com:80*).

Script path

This is the path to the server script which will receive the data when using SmartObserver with Geolux Hydroview. This should be set to */send_data*.

Mobile operator lock

The mobile operator lock defines the GPRS modem behavior when the home mobile network is not available. The *Default* setting will allow the modem to connect to any available network, provided that it is supported by the SIM card. The *Disable roaming* setting will disable roaming and ensure that no roaming costs will be charged. The *Lock to operator* setting is the most restrictive and will allow the modem to connect only to the home network.

Modem connection

Configure whether to connect to a standard GSM/GPRS mobile network or to use LTE-M connection. This setting must be configured according to the SIM car used because some SIM cards support only one type of connection.

Battery Settings

Charge current

The maximum charging current for the battery. Check the battery data sheet and ensure that this parameter is not larger than the maximum charging current specified in the battery data sheet. It is recommended to set this parameter to a value that is 10 percent lower than the maximum allowed charging current.

Maximum charge voltage

This is the maximum charging voltage for the battery. Check the battery data sheet and enter the specified value.

MPPT voltage

This is the voltage specified in the solar panel data sheet. It is the voltage level at which the charging of the battery will start.

No-charge temperature

This is the minimum temperature for charging the battery. When the environment temperature is lower, the battery will not be charged in order to prevent battery damage. Typically, this value should be between -10 °C and -30 °C, depending on the battery type. Please check the battery data sheet to configure the correct value.

Enable charge

Enable or disable battery charging. In normal operation mode, this parameter should be set to *Enable*.

Input And Output Settings

Send alert on GPIO

Enable this parameter to start monitoring signal change on digital inputs. Whenever the change in the digital input is detected, the data logger will connect to the server and send an alert. If digital inputs are not used, set this parameter to *Do not send alert*.

6 Data Logger Configurator Utility

Geolux provides a user-friendly PC application, Geolux Instrument Configurator, for setting up the Geolux SmartObserver data logger's operating parameters as well as taking an image with the Geolux HydroCam camera in case the camera is connected to the data logger.

When started, the Geolux Instrument Configurator displays its main window. Picture 9. shows the Geolux Instrument Configurator main window on start-up.

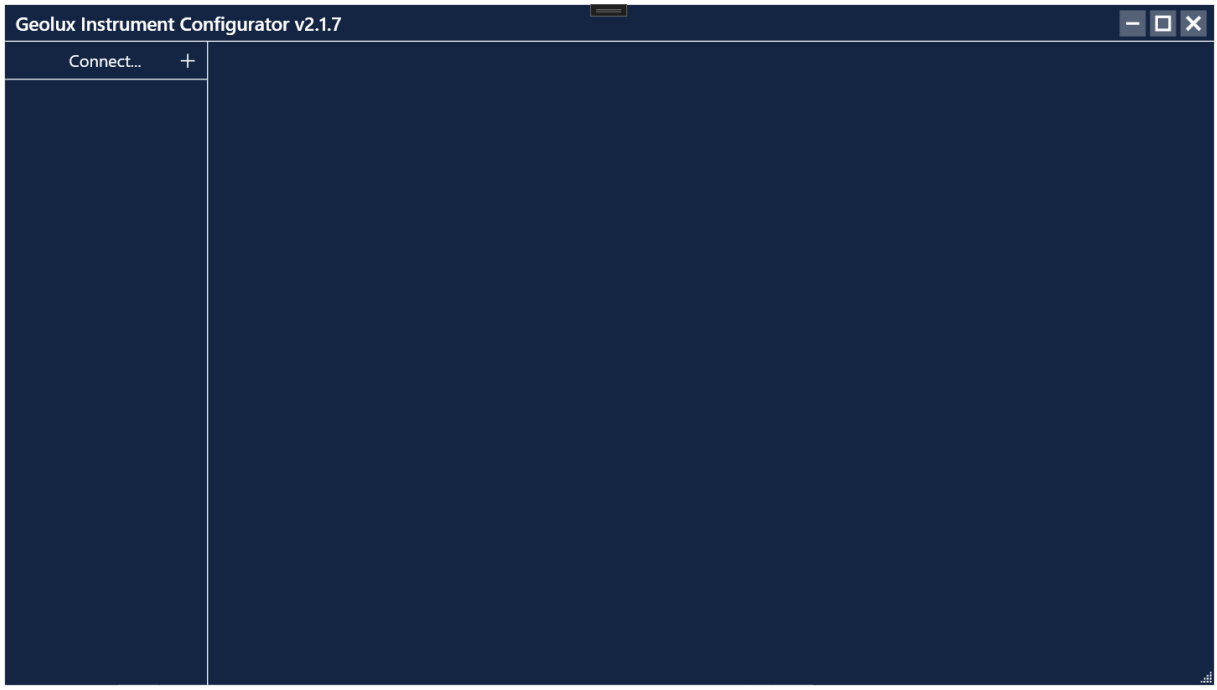

Picture 9. Geolux Instrument Configurator Main Window

To connect the Geolux Instrument Configurator with the instrument, connect your PC to the data logger using a serial cable connection. Then, click the *Connect* button in the upper left corner and select SmartObserver from the window which appears. In the next window, select the appropriate COM port. When the *Connect* button is clicked, Geolux Instrument Configurator will try to establish a data link between your PC and the data logger. If the connection is successful, the device will appear under *Connected devices* and the *Settings* tab will be displayed as shown in Picture 10. Instrument settings are sorted into 4 groups: *Logger settings*, *GPRS settings*, *Battery settings* and *Input and output settings*. By clicking the name of a specific group, all the settings which belong to that group can be viewed and changed. The following settings are displayed:

Logger settings
Date and time

GPRS settings
APN
Username
Password
DNS
Server address
Script path
Mobile operator lock
Modem connection

Battery settings
Charge current
Max. charge voltage
MPPT voltage
No-charge temp.
Enable charge

Input and output settings
Send alert on GPIO

A detailed description of the selected parameter appears on the right side of the window when the user clicks on, or begins to change, a specific setting. When a setting is changed, the *Set* button will appear next to the setting. By clicking the *Set* button, the user confirms the change and the new setting is saved. The *Update firmware* button allows the user to update the firmware of the device, while the *Export parameters* button exports the current settings to .txt file. By clicking the *Storage overview* button the user can view the stored data count, as well as the date and time of the first and last data stored. The entire storage can be reset by clicking the *Reset storage* button, or downloaded by clicking the *Download storage* button.

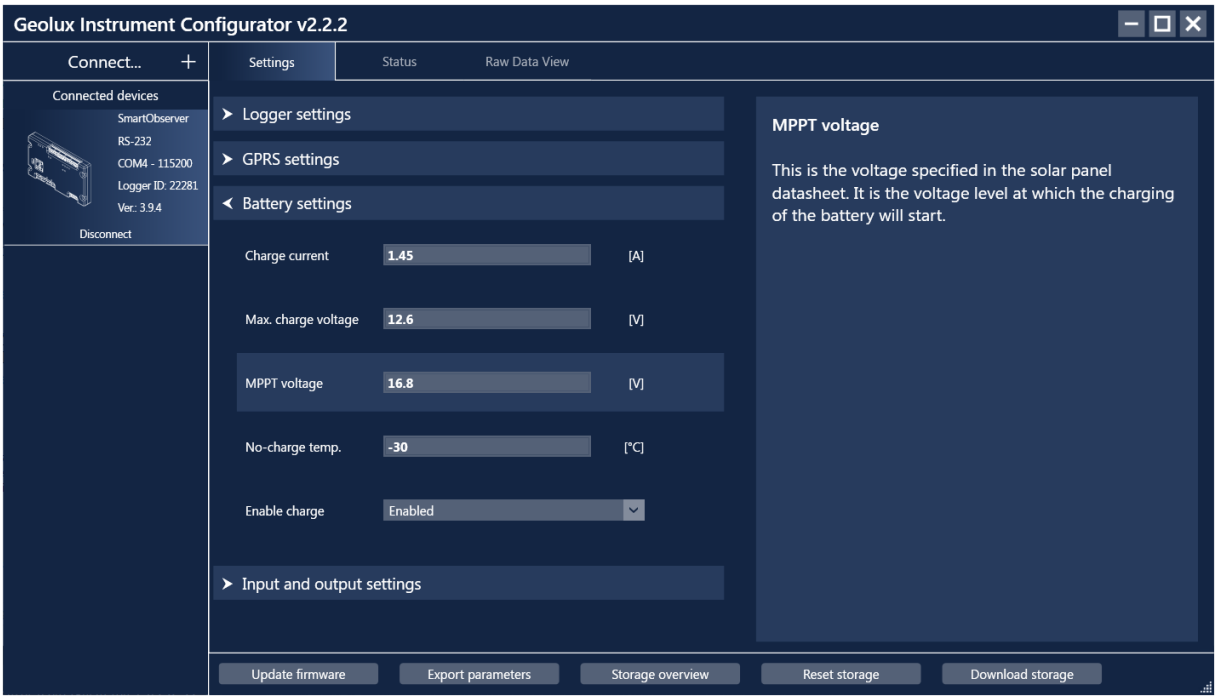

Picture 10. Geolux Instrument Configurator - Settings View

Navigating to the *Status* tab shown in Picture 11. allows the user to view different status information.

To check the GPRS connectivity status, a progress bar on the top indicates the strength of the modem signal. The strength of the signal is checked and the progress bar value is updated every 10 seconds. If necessary, the user can check the strength of the signal at any time by clicking the *Reload* button next to the progress bar. Clicking the *Send SMS* button allows the user to send an SMS message from the data logger to any mobile phone number to verify that the data logger has successfully connected to the GSM network. SMS messages can also be sent to the data logger for diagnostic purposes. SMS diagnostics is described in chapter 8.

Clicking the *Check device info* button displays the SmartObserver's ID and the number of connected devices. If there are any devices connected, additional information about them will be displayed and the user can view information about the connected instruments' readings by clicking the *Check device readings* button.

The *Check power status* button gives information about the input voltage and charging current of the data logger, as well as the battery voltage, while the *Check modem status* button displays information about the modem.

If the HydroCam camera is connected to the SmartObserver data logger, the user can obtain the image from the camera by clicking the *Check camera picture* button.

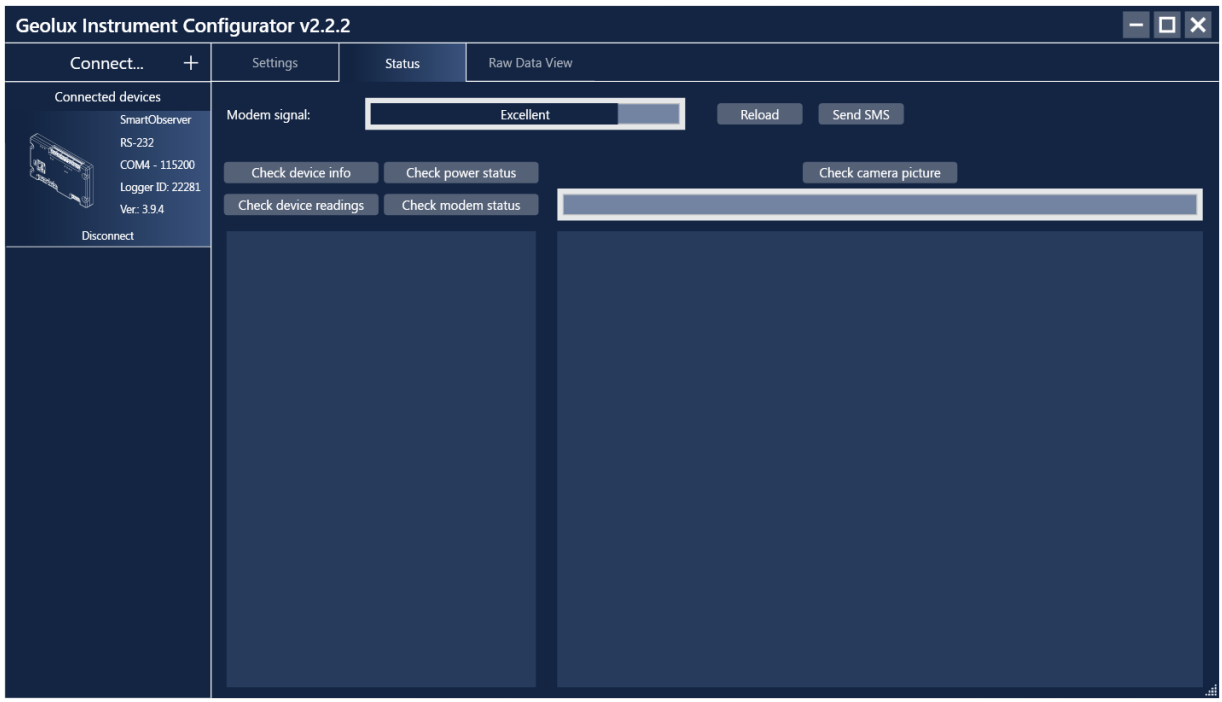

Picture 11. Geolux Instrument Configurator - Status View

Navigating to the *Raw Data View* tab, seen in Picture 12., enables the user to view the debug messages sent by the SmartObserver data logger by selecting any debug flags of interest and clicking the *Start* button.

Picture 12. Geolux Instrument Configurator - Raw Data View

7 SMS Diagnostics

For diagnostic purposes the user can send SMS messages to the SmartObserver data logger. The folowing messages are supported:

By sending a question mark *?* to the SmartObserver data logger the user can view the modem status and the data logger parameters. The response to the *?* command has the following format:

GEOLUX LOGGER
ID:<logger_id>
APN:<gprs_apn>
NAME:<gprs_username>
PASS:<gprs_password>
SERVER:<server_address_port>
PATH:<script_path>
PATHFW:<script_path_fw_update>
CHRMA:<battery_charger_charge_mA>
CHRMV:<battery_charger_max_charge_mV>
MPPTMV:<battery_charger_mppt_mV>
CSTBYMMV:<battery_charger.cont_standby_mV>
MINCHRMA:<battery_charger.min_charge_mA>
NOCHRTEMP:<battery_charger.no_charge_temperature>
CHRENB:<battery_charger.enable_charging>
BLOBPWR:<do_not_turnoff_pwr_blob>
SENDALERTGPIO:<send_alert_on_gpio>
SIMLOCK:<mobile_operator_lock>
ModemStatus:<DiagnosticErrorMsg>,<gLastErrorMsg>

Sending the command *RESET MEASURSTORAGE* resets the saved measurements, while sending the command *RESET LOGGER* performs a hard reset of the SmartObserver.

SMS messages can also be used to change the data logger's parameters. To change a parameter send the command *CONFIG,<key1>=<value1>,<key2>=<value2>,...,<keyN>=<valueN>*. The following keys are used to change the parameters:

apn - gprs apn
usr - gprs username
pass - gprs password
serv - server address
path - script path
pathfw - firmware update path
sndalgpio - send gpio alert
simlock - mobile operator lock

8 Troubleshooting

Problem	Possible solutions
The instrument does not connect to the PC application over RS-232 connection.	**1. Check power supply** Make sure that the power is being supplied to the instrument through the BAT line. **2. Check RS-232 connector** Make sure that the RS232-1 line (and not the RS232-2 line) is used to connect the data logger to the PC. **4. Make sure that you are using the correct COM port** If there are multiple COM ports available on your computer, make sure that you are selecting the correct COM port in the PC application. If you are not certain which COM port number is assigned to the COM port that is being used to establish a connection with the instrument, try setting up the connection with each COM port available in the system, until the connection is established. 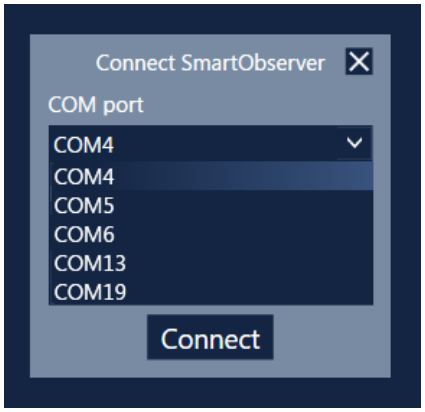 **5. Make sure that the COM port is not already open** Only one application may use a single COM port in the system. Make sure that no other open application uses the same COM port that you are trying to open. **6. Try restarting the application and/or the computer** Close and reopen the configurator application and try to establish the connection again. Restart your computer and try to establish the connection to the instrument again.
Modem signal progress bar showing no signal.	**1. Check GPRS connectivity** Make sure that the GPRS antenna is attached and the SIM card is correctly inserted into the SIM card slot.
There is no confirmation from the camera connected to the data logger.	**1. Check power supply** Make sure that the power is being supplied to the camera by connecting the white and brown wires from the camera's cable to one of the SmartObserver's output power lines, PWR1, PWR2 or PWR3. **2. Check RS-232 connector** Make sure that the camera is connected to the SmartObserver's RS232-2 line by connecting the green wire from the camera's cable to the RS232-RXD2 pin, the yellow wire to the RS232-TXD2 pin and the grey wire to the GND pin.

The data logger is not sending data to the server.	**1. If you have access to the data logger** **1.1. Check the SIM card** Make sure that the SIM card is correctly inserted into the SIM card slot. Make sure the SIM card is not locked with a PIN, that the SIM card is active and that it has not used up all the data traffic. You can check this by inserting the SIM card into a mobile phone. **1.2. Check GPRS settings** Make sure that the GPRS APN, Username and Password are correctly entered as provided by the mobile operator. **1.3. Check server address and script path** Make sure that the server address and script path are correctly set up. In case you are using Hydroview, the server address should be *www.hydro-view.com:80*, and the scrip path should be */send_data*. **2. If you do not have access to the data logger** **2.1. Check site health in Hydroview** Go to the Hydroview Sites page and check the Health status of the site. The health bar shows the status of the last 7 days, with the rightmost square representing the current day. If the square is orange, the signal strength at the site might be low but because the data logger stores the measurements internally until they can be sent, it will still send the data when the signal strength improves. **2.2. Check battery voltage** In the Data Explorer page of your site in Hydroview, check the battery and input voltage graphs and make sure that the battery is operating as expected. **2.3. Perform SMS diagnostics** Perform SMS diagnostics as described in chapter 7. Please note that it might take some time for the data logger to respond to sent SMS messages. When the data logger responds, perform steps 1.2. and 1.3.

9 Appendix A - Mechanical Assembly

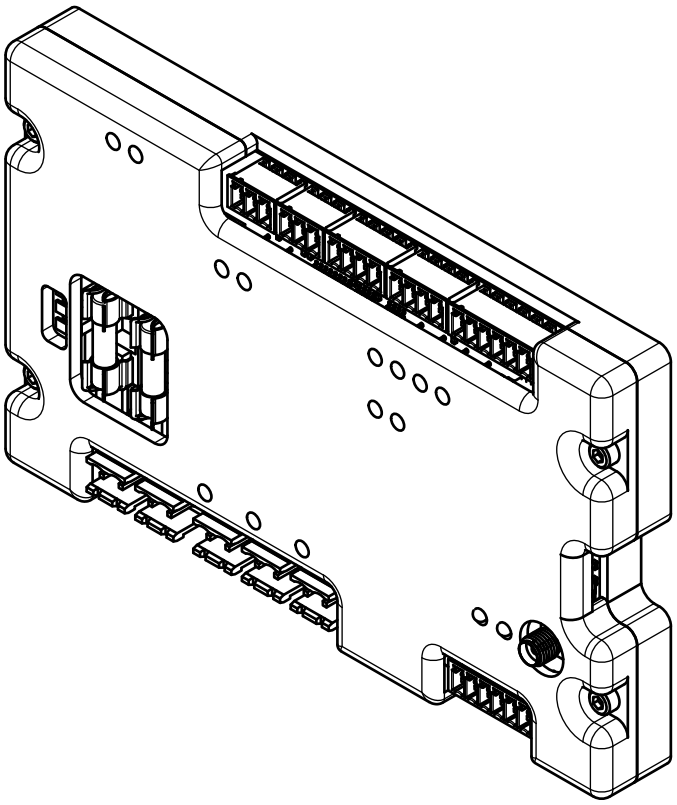

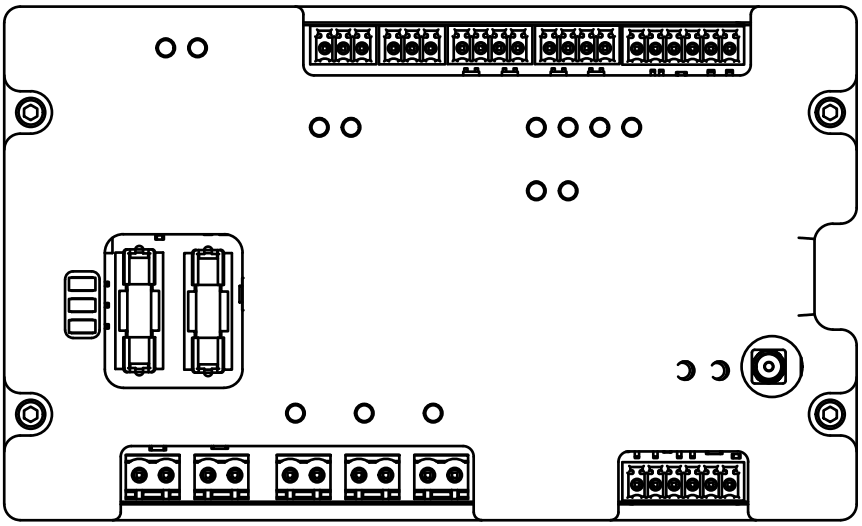

2023.