DATASHEET

STX-50

LogTag

Distributed by AKRIBIS

Smart Probes

The LogTag® Smart Calibrated Probes are a precise and reliable probe that can be swapped out and calibrated separately from your compatible logger. This reduces logging downtime and removes the need to return the logger for calibration. When calibration is required, the plug-and-play design allows users to interchange the probe easily.

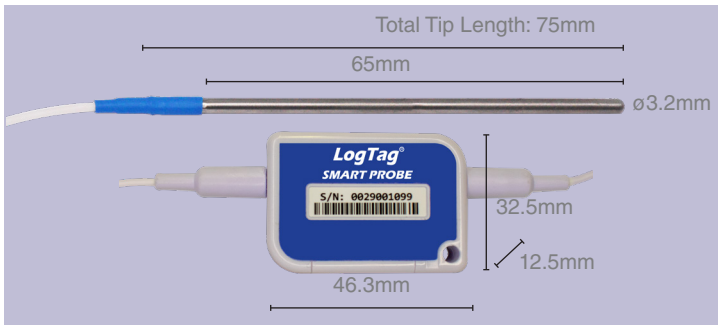

CP100K - Smart Probe

Part #:	CP100K-15: 1.5m (4'11") CP100K-30: 3.0m (9'10")
Compatible Loggers:	UTRED30-16 Dual-Channel UTRED30-WiFi Dual-Channel TRED30-16U
Stainless Probe Type:	316
Sensor Temperature Range:	-40 °C to +99 °C (-40 °F to +210 °F)

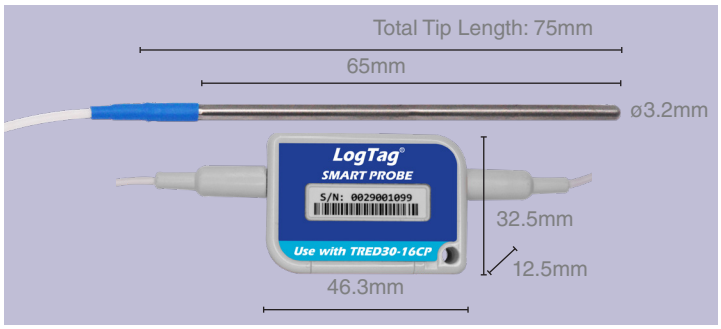

CP110K - Smart Probe

Part #:	CP110K-15: 1.5m (4'11") CP110K-30: 3.0m (9'10")
Compatible Loggers:	TRED30-16CP
Stainless Probe Type:	316
Sensor Temperature Range:	-40 °C to +99 °C (-40 °F to +210 °F)

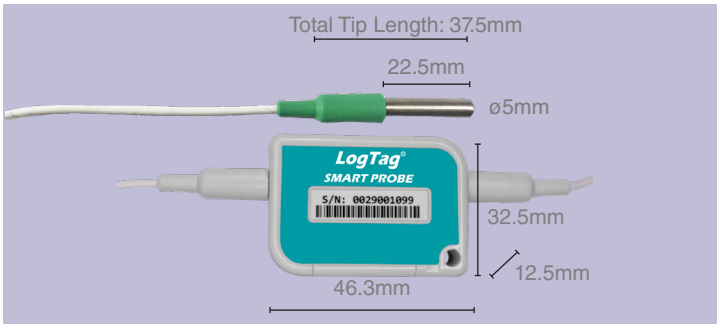

CP10S - Smart Probe

Part #:	CP10S-15: 1.5m (4'11") CP10S-30: 3.0m (9'10")
Compatible Loggers:	UTREL30-16 Dual-Channel UTREL30-WiFi Dual-Channel
Stainless Probe Type:	316
Sensor Temperature Range:	-90 °C to +40 °C (-130 °F to +104 °F)

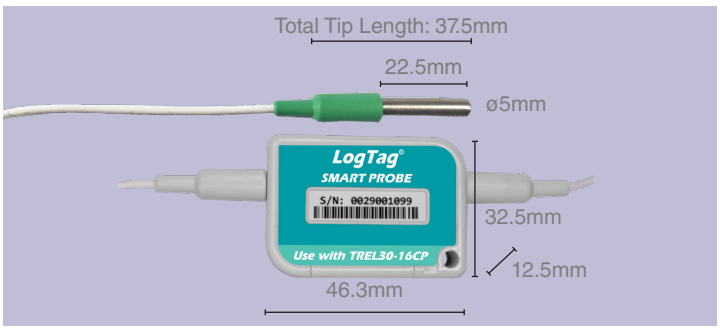

CP11S - Smart Probe

Part #:	CP11S-15: 1.5m (4'11") CP11S-30: 3.0m (9'10")
Compatible Loggers:	TREL30-16CP
Stainless Probe Type:	316
Sensor Temperature Range:	-90 °C to +40 °C (-130 °F to +104 °F)

LogTag® External Probes

ST100 range

The LogTag® ST100 probe range is suitable for a wide range of applications in conjunction with compatible external probe data loggers. All materials at probe end of the cable are FDA food rated, including the cable (except ST100B), and terminated with a high quality gold plated MCX connector and an industrial strength PTFE coaxial cable.

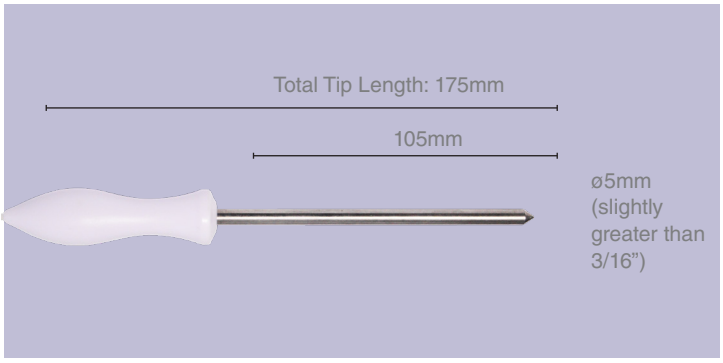

ST100H - Handled Long Tipped Probe

Part #:	ST100H-15: 1.5m (4'11") ST100H-30: 3.0m (9'10")
Compatible Loggers:	TREX loggers TRED30 loggers UTRED and UTRED30 loggers
Stainless Probe Type:	316
Sensor Temperature Range:	-40 °C to +99 °C (-40 °F to +210 °F)

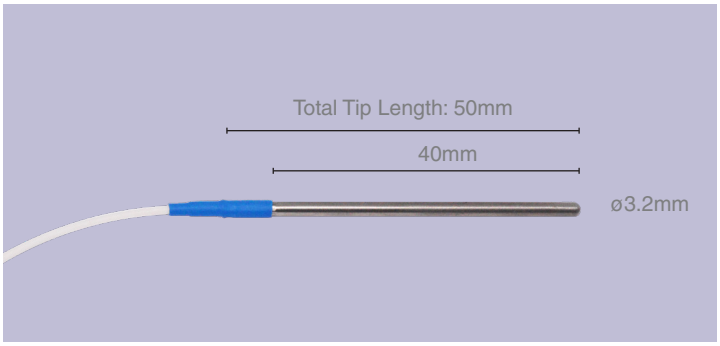

ST100J - Short Round Tip Probe

Part #:	ST100J-15: 1.5m (4'11") ST100J-30: 3.0m (9'10")
Compatible Loggers:	TREX loggers TRED30 loggers UTRED and UTRED30 loggers
Stainless Probe Type:	316
Sensor Temperature Range:	-40 °C to +99 °C (-40 °F to +210 °F)

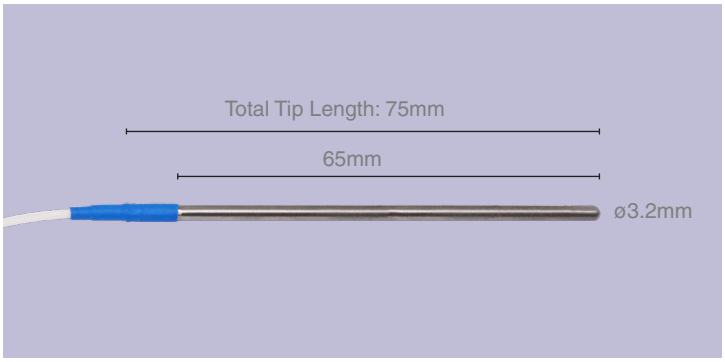

ST100K - Medium Round Tip Probe

Part #:	ST100K-15: 1.5m (4'11") ST100K-30: 3.0m (9'10")
Compatible Loggers:	TREX loggers TRED30 loggers UTRED and UTRED30 loggers
Stainless Probe Type:	316
Sensor Temperature Range:	-40 °C to +99 °C (-40 °F to +210 °F)

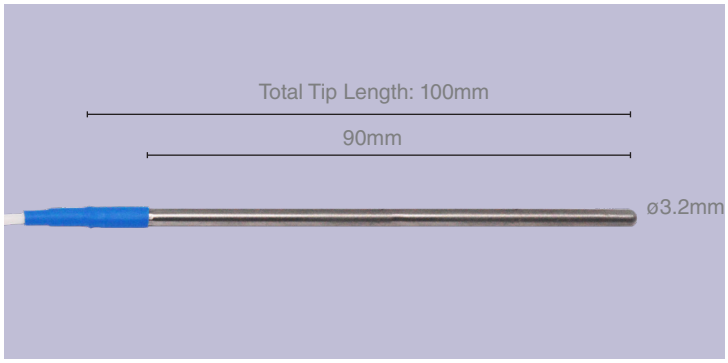

ST100L - Long Round Tip Probe

Part #:	ST100L-15: 1.5m (4'11") ST100L-30: 3.0m (9'10")
Compatible Loggers:	TREX loggers TRED30 loggers UTRED and UTRED30 loggers
Stainless Probe Type:	316
Sensor Temperature Range:	-40 °C to +99 °C (-40 °F to +210 °F)

LogTag® External Probes

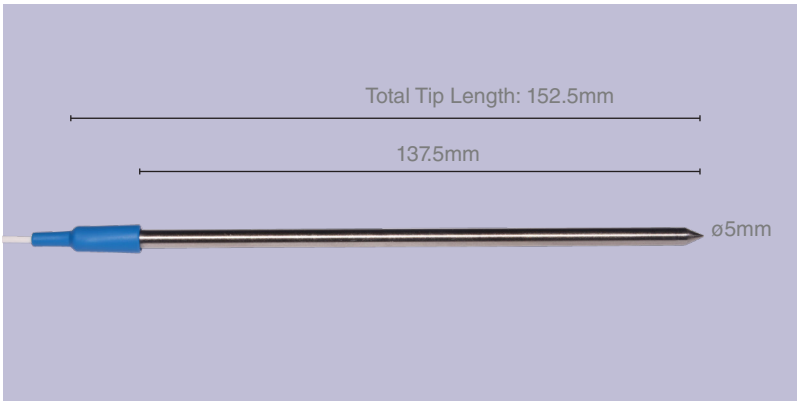

Part #:	ST100T-15: 1.5m (4’11”) ST100T-30: 3.0m (9’10”)
Compatible Loggers:	TREX loggers TRED30 loggers UTRED and UTRED30 loggers
Stainless Probe Type:	316
Sensor Temperature Range:	-40 °C to +99 °C (-40 °F to +210 °F)

ST100T - Long Tipped Sensor Probe

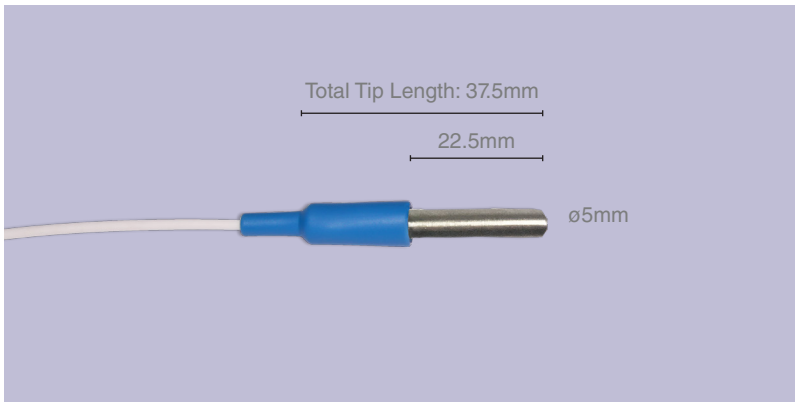

Part #:	ST100S-15: 1.5m (4’11”) ST100S-30: 3.0m (9’10”)
Compatible Loggers:	TREX loggers TRED30 loggers UTRED and UTRED30 loggers
Stainless Probe Type:	316
Sensor Temperature Range:	-40 °C to +99 °C (-40 °F to +210 °F)

ST100S - Short Round Tip Sensor Probe

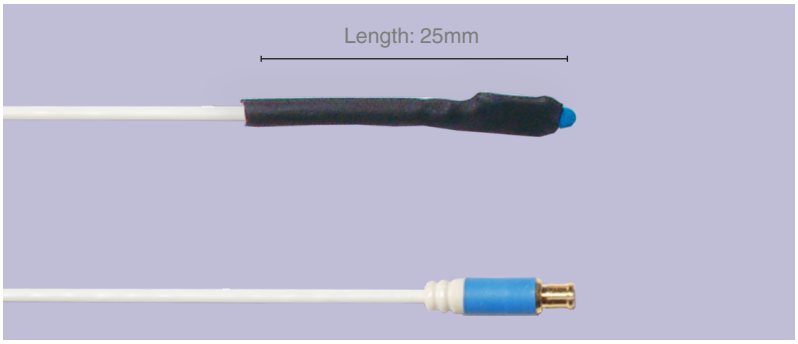

Part #:	ST100B-15: 1.5m (4’11”) ST100B-30: 3.0m (9’10”)
Compatible Loggers:	TREX loggers TRED30 loggers UTRED and UTRED30 loggers
Sensor Temperature Range:	-40 °C to +99 °C (-40 °F to +210 °F)

ST100B - Untipped Bare Sensor

ST10 range (Ultra-Low Temperature)

The LogTag® ST10 probe range is distinguished from other external temperature probe types by the green sleeve, and the green body at the plug end of the probe cable. These probes are suitable for the TREL/UTREL models. The probe is terminated with a high quality gold plated MCX connector and industrial strength PTFE coaxial cable.

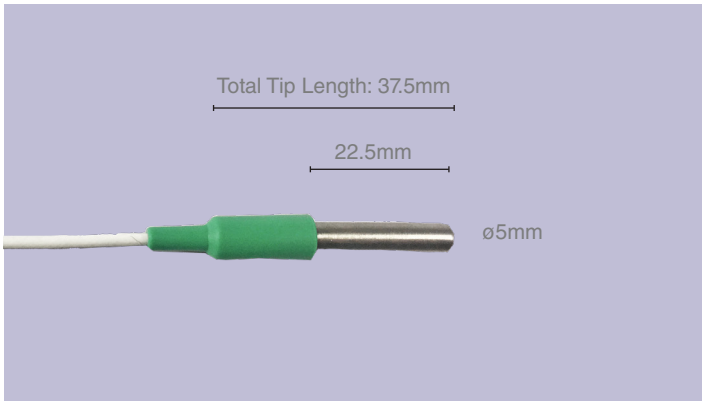

ST10S - Short Round Tip Probe

Part #:	ST10S-05: 0.5m (1'6") ST10S-15: 1.5m (4'11") ST10S-30: 3.0m (9'10")
Compatible Loggers:	TREL & TREL30 loggers UTREL & UTREL30 loggers
Stainless Probe Type:	316
Sensor Temperature Range:	-90 °C to +40 °C (-130 °F to +104 °F)

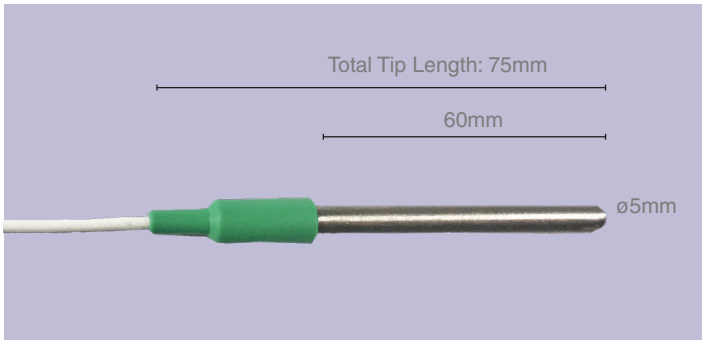

ST10M - Medium Round Tip Probe

Part #:	ST10M-15: 1.5m (4'11")
Compatible Loggers:	TREL & TREL30 loggers UTREL & UTREL30 loggers
Stainless Probe Type:	316
Sensor Temperature Range:	-90°C to +40°C (-130°F to +104°F)

STX-50

5 meter (~16' 5") extension cable for extending ST10 or ST100 external temperature sensors, EXCLUDING Smart Probes. The socket end of the cable (which accepts the ST10 or ST100 plug) is fitted with a flexible sleeve that when the ST sensor's plug is in place will protect the mated connection to IP61. The STX-50 extension is designed as a permanent connection and not for frequent connections.

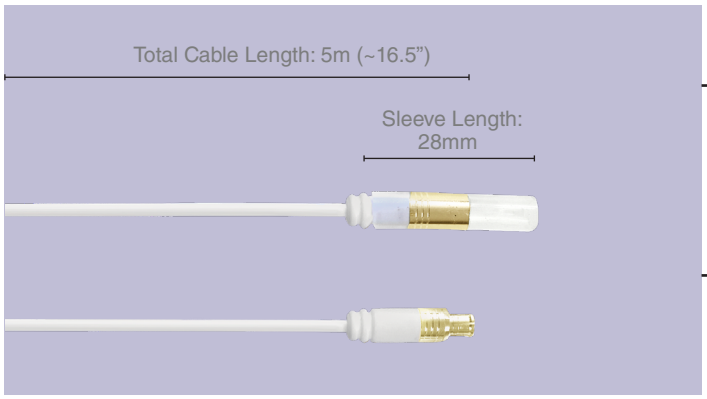

Part #:	STX-50
Environmental:	Logger to extension connection rating: IP61 (when logger vertically mounted or hung) Extension to probe connection rating: IP61, -46°C (-50.8°F) ~ +74 °C (165.2°F)
Compatibility:	For extending ST100 and ST10 external temperature probes* *only 1 extension per logger

STX-50 - External Probe Extension cable

© Copyright 2025, LogTag® North America Inc. All rights reserved.
LogTag® North America Inc. reserves the right to change this document without notice.
LogTag® and the distinctive shape of all LogTag® data loggers are registered trademarks of LogTag North America Inc.
AKRIPS www.akrips.info Contact@akrips.info