DATASHEET

SPH10

Vaisala · Authorized Partner

Distributed by AKRIBIS

VAISALA

Static Pressure Head Series SPH10/20

for minimizing wind-induced error

SPH10/20 is easy to install and connect. In the picture, SPH10 is connected to PTB210.

Features

- Minimizes wind induced error
- Reliable barometric pressure measurement in all weather
- Wind tunnel tested structure
- Easy to clean
- Easy to install

SPH10/20 Static Pressure Heads Series products minimize the effects of wind on barometric pressure readings.

Wind induced effects are one of the main sources of error when measuring barometric pressure. Variations due to strong and gusty wind can be overcome by using a static pressure head to reduce the effect of dynamic pressure.

Vaisala Static Pressure Head Series SPH10/20 are designed to minimize the errors caused by wind. Their wind tunnel tested structure is both horizontally and vertically symmetrical. This design ensures reliable barometric pressure measurements in all weather.

Ideal for outdoor installations

Vaisala static pressure heads are available in 2 models: Vaisala Static Pressure Head SPH10 is a basic version, and Vaisala Static Pressure Head SPH20 is a heated version for reliable operation in snowy and icy conditions. SPH20 is available in 2 voltage variants: 12 V DC (SPH20) and 24 V DC (SPH20-24V). The heated SPH20 contains a thermostat that switches on the heating power at temperatures where the risk of icing may occur.

Composed of ultraviolet stabilized polycarbonate (PC) plastics and offshore aluminum, SPH10/20 static pressure heads are durable and weather resistant.

SPH10/20 protects against rain and condensed water. This prevents capillary condensation of a water column in the pressure channel resulting in a pressure error. The drain holes in the lower plate allow rain and water to flow out. The static pressure heads have internal netting that prevents insects and debris from blocking the pressure channel.

Carefree maintenance

SPH10/20 static pressure heads are easy to install and disassemble, service, and clean – even at the installation site. Vaisala BAROCAP® Digital Barometer PTB210 can be installed directly on top of SPH10/20 static pressure heads. Other barometers can be connected to the heads with pressure tubing.

SPH10 and SPH20 are a perfect pair for all Vaisala barometers. They ensure an accurate and reliable measurement in all weather conditions.

Technical data

Operating environment

Operating temperature	−60 ... +80 °C (−76 ... +176 °F)

Mechanical specifications

Weight	SPH10: 800 g (1.76 lb) SPH20, SPH20-24V: 1360 g (3.0 lb)
Materials	Polycarbonate (PC) plastic, offshore aluminum
Mounting	M6×30 DIN912 (2 pcs), M6x20 DIN912 (2 pcs), M6 spring lock washer DIN127 (2 pcs) M6 flat washer DIN125 (2 pcs)
Hose connection	Barbed fitting for 4 mm I.D. hose or Rp1/4 thread (parallel)

Inputs and outputs

Electrical connections	M12 connector
Maximum power consumption	SPH20: 12 V / 70 W SPH20-24V: 24 V / 35 W
Thermostat switching temperature	
On	+4 °C ±3 °C (+39.2 °F ±4.4 °F)
Off	+13 °C ±3 °C (+55.4 °F ±4.4 °F)

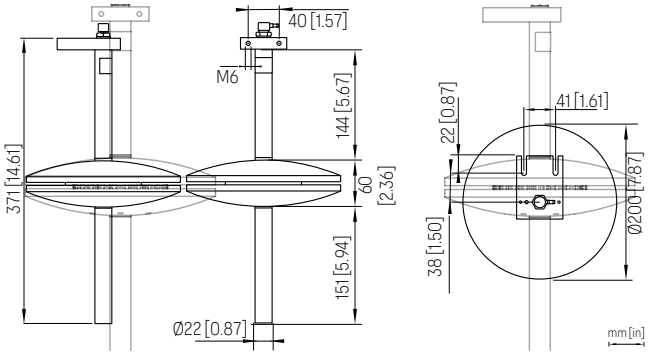

SPH10

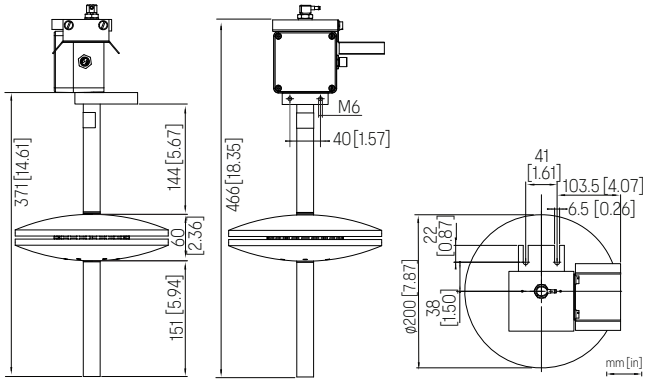

SPH20 and SPH20-24V

VAISALA

Published by Vaisala | B210907EN-E © Vaisala 2025

All rights reserved. Any logos and/or product names are trademarks of Vaisala or its individual partners. Any reproduction, transfer, distribution or storage of information contained in this document is strictly prohibited. All specifications — technical included — are subject to change without notice.