USER GUIDE

RSS-2-300W-Series

Geolux

Distributed by AKRIBIS

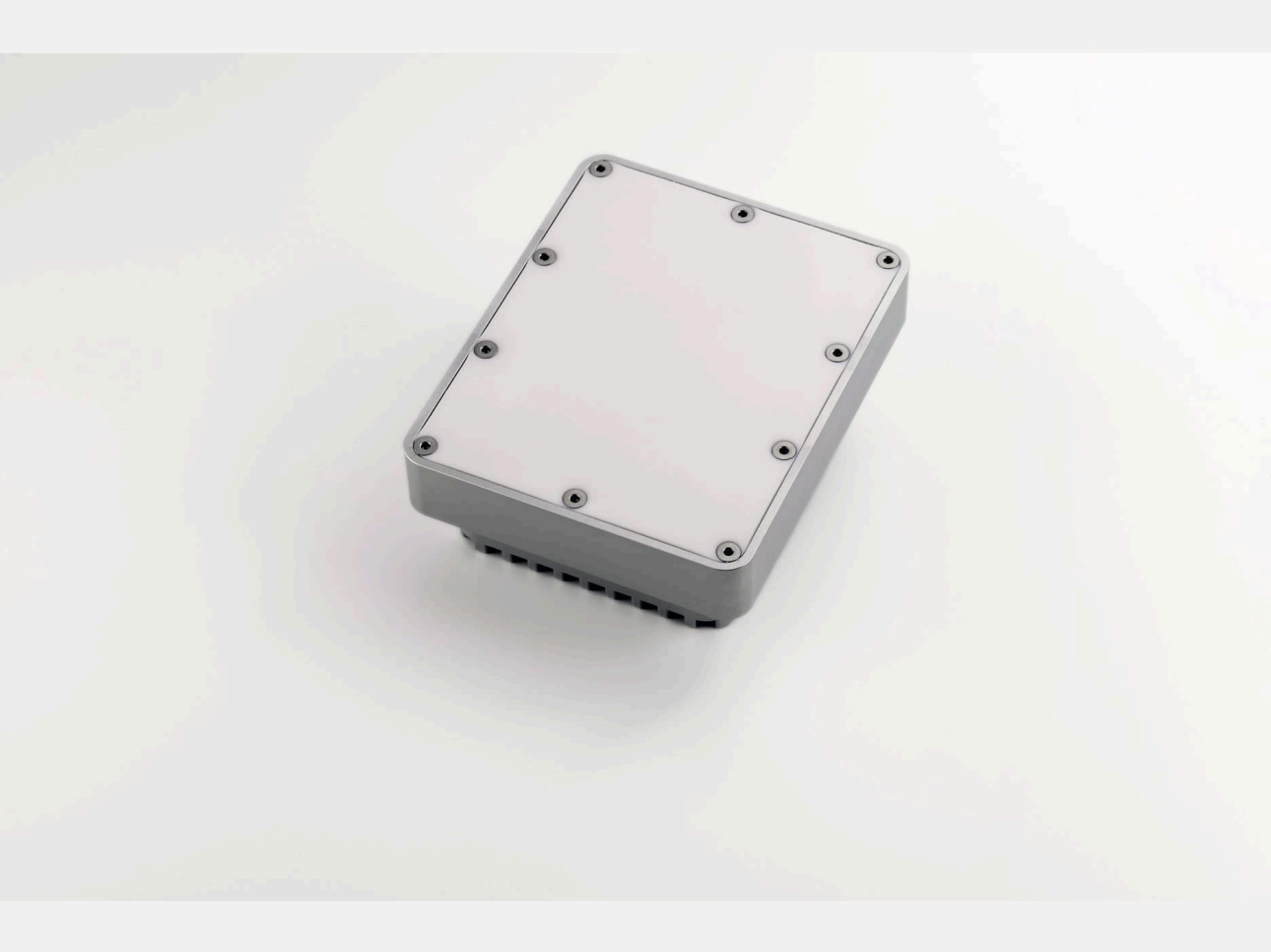

RSS-2-300W

Non-Contact Surface Velocity Radar

User Manual

v6.5.9

Copyright ©2023 Geolux d.o.o. All rights reserved.

Starting Point

Thank you for purchasing Geolux RSS-2-300W non-contact surface velocity radar! We have put together the experience of our engineers, the domain knowledge of our customers, the enthusiasm of our team, and the manufacturing excellence to deliver this product to you.

You may freely rely on our field-proven radar technology. The use of top-quality components and advanced signal processing algorithms ensures that Geolux surface velocity radar can be used in various applications and environments.

Although we are certain that you are more than capable of connecting the surface velocity radar to your system, we have created this User Manual to assist you in setting up and using Geolux surface velocity radar device.

Should there be any questions left unanswered, please feel free to contact us directly:

Geolux d.o.o.
Ljudevita Gaja 62
10430 Samobor
Croatia

E-mail: **geolux@geolux.hr**
Web: **www.geolux.hr**

Copyright ©2023 Geolux d.o.o. All rights reserved.

Federal Communications Commission (FCC) Approval

This equipment has been tested and found to comply with the limits for a class B digital device, pursuant to part 15 of the FCC Rules. These limits are designed to provide reasonable protection against harmful interference in a residential installation. This equipment generates, uses and can radiate radio frequency energy and if not installed and used in accordance with the instructions, may cause harmful interference to radio communications. However, there is no guarantee that interference will not occur in a particular installation. If this equipment does cause harmful interference to ratio or television reception, which can be determined by turning the equipment off and on, the user is encouraged to try to correct the interference by one or more of the following measures:

- Reorient or relocate the receiving antenna
- Increase the separation between the equipment and receiver
- Connect the equipment into an outlet on a circuit different from that to which the receiver is connected
- Consult the dealer or an experienced radio/TV technician for help

This equipment has been verified to comply with the limits for a class B computing device, pursuant to FCC Rules. In order to maintain compliance with FCC regulations, shielded cables must be used with this equipment. Operation with non-approved equipment or unshielded cables is likely to result in interference to radio and TV reception. The user is cautioned that changes and modifications made to the equipment without the approval of manufacturer could void the user's authority to operate this equipment.

ISED/Canada Statement

This device contains licence-exempt transmitter(s)/receiver(s) that comply with Innovation, Science and Economic Development Canada's licence-exempt RSS(s). Operation is subject to the following two conditions:

- This device may not cause interference.
- This device must accept any interference, including interference that may cause undesired operation of the device.

Cet appareil contient des émetteurs / récepteurs exempts de licence qui sont conformes aux RSS exemptes de licence d'Innovation, Sciences et Développement économique Canada. Son fonctionnement est soumis aux deux conditions suivantes:

- Cet appareil ne doit pas provoquer d'interférences.
- Cet appareil doit accepter toutes les interférences, y compris les interférences susceptibles d'entraîner un fonctionnement indésir-able de l'appareil.

RADIATION EXPOSURE STATEMENT
The device meets the exemption from the routine evaluation limits in section 2.5 of RSS 102. This equipment should be installed and operated with a minimum distance of 20 centimetres between the radiator and users.

Contents

1. Introduction **1**

2. Electrical Characteristics **2**

3. Connector Pin-Out **3**

3.1. Serial RS-232 Interface 4

3.2. Serial RS-485 Interface 4

3.3. Analog 4 – 20 mA Output 5

3.4.1. Connection to Schneider TM3AM6 analog input module 6

4. Installing the Surface Velocity Radar **8**

4.1. Instrument Mounting and Location Selection 8

4.2. Measurement Quality Indicator 9

4.3. Rain and Wind 9

4.4. Interference and Multiple Radars 10

4.5. Fogging and Evaporation 10

4.6. Reflections 10

5. Surface Velocity Radar Settings **12**

6. Data Interface **18**

6.1. Serial RS-232 Interface 18

6.2. Serial RS-485 Interface 18

7. Data Protocols **19**

7.1. NMEA Protocol (RS-232) 19

7.2. Servicing Protocol (RS-232) 21

7.3. HS Protocol (RS-485) 26

7.4. Modbus Protocol (RS-485) 28

7.4.1. Modbus Input Registers 32

7.5. SDI-12 Protocol 33

8. Geolux Instrument Configurator **35**

9. Calculating Discharge from Flow Velocity **39**

10. Troubleshooting **41**

11. Appendix A – Mechanical Assembly **45**

1 Introduction

Geolux RSS-2-300W surface velocity radar uses radar technology to provide precise contactless measurement of surface flow velocity. Contactless radar technology enables quick and simple sensor installation above the water surface, and requires minimum maintenance. This functionality is achieved by transmitting an electromagnetic wave in 24 GHz frequency range (K-band), and measuring the frequency shift of the electromagnetic wave reflected from the flowing water surface. The frequency shift is caused by the Doppler effect of the moving surface on the electromagnetic wave. As the relative speed between the radar sensor and the water surface increases, the detected frequency shift also increases, thus enabling the surface velocity radar to precisely determine the surface flow velocity.

The surface velocity radar is able to detect water flow traveling at speeds ranging from 0.08 m/s to 15.0 m/s with precision of 0.01 m/s. Integrated tilt sensor measures inclination angle of the sensor and the flow velocity measurement is automatically cosine-corrected according to the measured mounting tilt angle.

AKRIBIS · www.akribis.info · contacto@akribis.info

2 Electrical Characteristics

The electrical characteristics of the Geolux RSS-2-300W surface velocity radar are given in Table 1.

Table 1. Electrical Characteristics

Parameter	MIN	TYP	MAX	Unit
Communication interface RS-232 interface speed RS-485 interface speed	 1200 1200	 9600 9600	 115200 115200	 bps bps
Radar sensor Frequency - EU, with CE label Frequency - US/Can, with FCC/IC label Radiated power (EIRP) Sensitivity Beam-width (3dB) – Azimuth Beam-width (3dB) – Elevation	 24.050 24.075 -108	 24.125 24.125 -110 12 24	 24.200 24.175 20 -112	 GHz GHz dBm dBm ° °
Power supply voltage	9.0	12.0	27.0	V_{DC}
Current consumption @ 12 V Active mode Standby mode Maximum peak current			 90 7.5 175	 mA mA mA
Operational temperature range	-40		+85	°C
Operational relative humidity range	0		100	%
Measurement range	0.08		15.00	m/s
Resolution		0.1		mm/s
Accuracy		+/- 2		%
Angle compensation	20	30	60	deg.
Installation Height Above the Water	0.5		25	m
Sample rate		10		sps
Ingress protection rating	IP68			

3 Connector Pin-Out

The surface velocity radar uses robust IP68 circular M12 connector with 12 positions and the mating cable is also delivered with the surface velocity radar. The connector and cable details are shown in Picture 1 while Table 2 gives a detailed description of each pin.

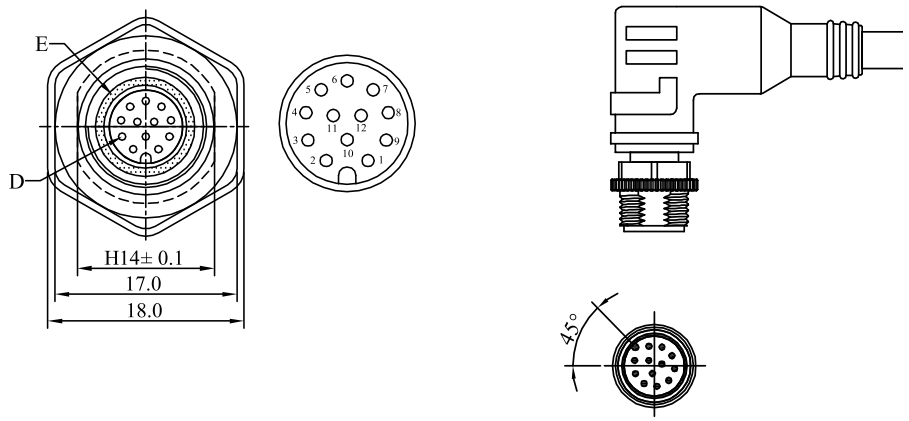

Picture 1. Surface Velocity Radar Connectors

Table 2. Connector and Cable Pin-out

Pin No.	Wire Color		Pin Name	Pin Description
1	White		GND	This pin should be connected to the ground (negative) pole of the power supply
2	Brown		+Vin	The power supply for the Radar Speed Sensor is provided on this pin. The Radar Speed Sensor power supply voltage must be in the range 9 VDC to 27 VDC, and the power supply must be able to provide at last 0.65W
3	Green		RS232 – TxD	RS-232 data transmit signal
4	Yellow		RS232 – RxD	RS-232 data receive signal
5	Grey		GND	Signal ground
6	Pink		CAN – H	CAN2.0B high signal *(optional)*
7	Blue		CAN – L	CAN2.0B low signal *(optional)*
8	Red		SDI-12 (with external adapter)	Optional SDI-12 communication interface. Requiered external adapter cable.
9	Orange		RS485 – D-	RS-485 data transmitter/receiver low signal
10	Dark Red		RS485 – D+	RS-485 data transmitter/receiver high signal
11	Black		Alarm SW	Alarm - open collector switch signal max. 60mA (optional)
12	Purple		4 – 20 mA	Sink for 4 – 20 mA analog interface. Connect sensing device as pull-up to sink the current

3.1. Serial RS-232 Interface

Serial RS-232 interface is implemented as standard PC full-duplex serial interface with voltage levels adequate for direct connection to PC computer or other embedded devices used for serial RS-232 communication.

In case the RS-232 interface is connected to standard DB-9 PC connector, TxD line (green wire) is connected to pin 2 and RxD (yellow wire) is connected to pin 3. For proper operation of the serial interface, additional connection of signal GND (grey wire) is required on pin 5 of the DB-9 connector.

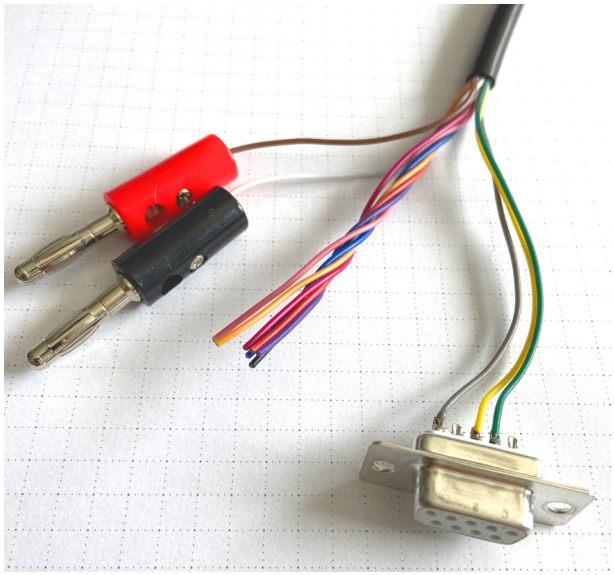

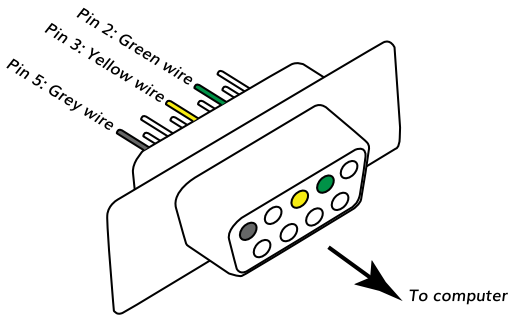

Picture 2. Serial RS232 DB-9 Cable

Geolux recommends using Waveshare USB TO RS232/485/TTL converter for connecting Geolux instruments to computers without a native RS-232 port.

https://www.waveshare.com/catalog/product/view/id/3629/s/usb-to-rs232-485-ttl/category/37/

Optionally Geolux can supply a cable with DB-9 connector connected to the cable but this must be specified as option when ordering the sensors.

Several communication protocols are available, and custom on request. Details of communication protocols are described later in this user manual.

3.2. Serial RS-485 Interface

Serial RS-485 interface is implemented as standard industrial half-duplex communication interface. The communication interface is internally short-circuit and overvoltage protected. Depending on the receiving device, the interface can be used with only two wires (D+ dark red wire & D- orange wire) while in some cases the ground connection (signal GND grey wire) is also required. For more details please consult receiver specification.

Most common communication protocol used with RS-485 interface is Modbus-RTU but other protocols are also available. Details of communication protocols are described later in this user manual.

3.3. Analog 4 – 20 mA Output

Analog current 4 – 20 mA output is provided for easier compatibility with older logging and control systems. Output is implemented as current sink architecture with common ground. Maximal voltage applied to the sink can go up to 30 VDC, providing greater flexibility in connections of the sensor to PLCs, loggers, or data concentrators.

Signal range and function for 4 – 20 mA analog output can be configured in the setup application so the sensor will be able to signal best suitable value range with available current range. Current step in the sensor is 0.3 µA, which limits the resolution, so care has to be taken while setting the minimal value to be represented by 4 mA and the maximal value to be represented by 20 mA so the resolution is sufficient for the system requirements.

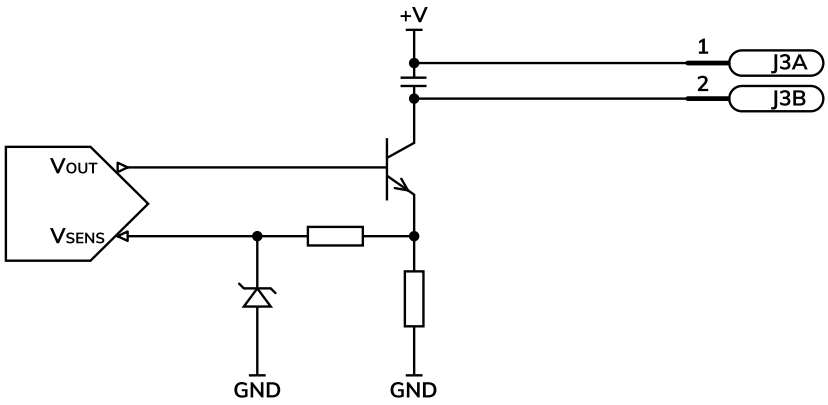

Picture 3. Analog 4 – 20 mA Output Internal Architecture

Measurement of the current by the client device (logger, PLC, modem etc.) must be implemented as the high side current measurement as shown on the picture 4. If sensing resistor is used resistance should be selected from the range 10Ω to 500Ω with recommended value 100Ω for the sensing resistor.

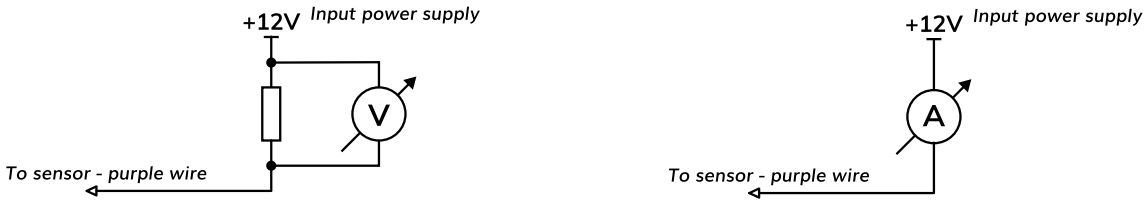

Picture 4. High Side Current Measurement for the 4 – 20 mA Analog Output

3.4.1. Connection to Schneider TM3AM6 analog input module

The TM3AM6 analog module contains 4 analog inputs, marked I0 to I3. Each analog input consists of two connectors, marked as I+ and I-. Each analog input can be configured to work either as analog voltage input (0 – 10 V or -10 to +10 V), or as analog current input (0 – 20 mA or 4 – 20 mA). This is the wiring diagram from the TM3AM6 user manual:

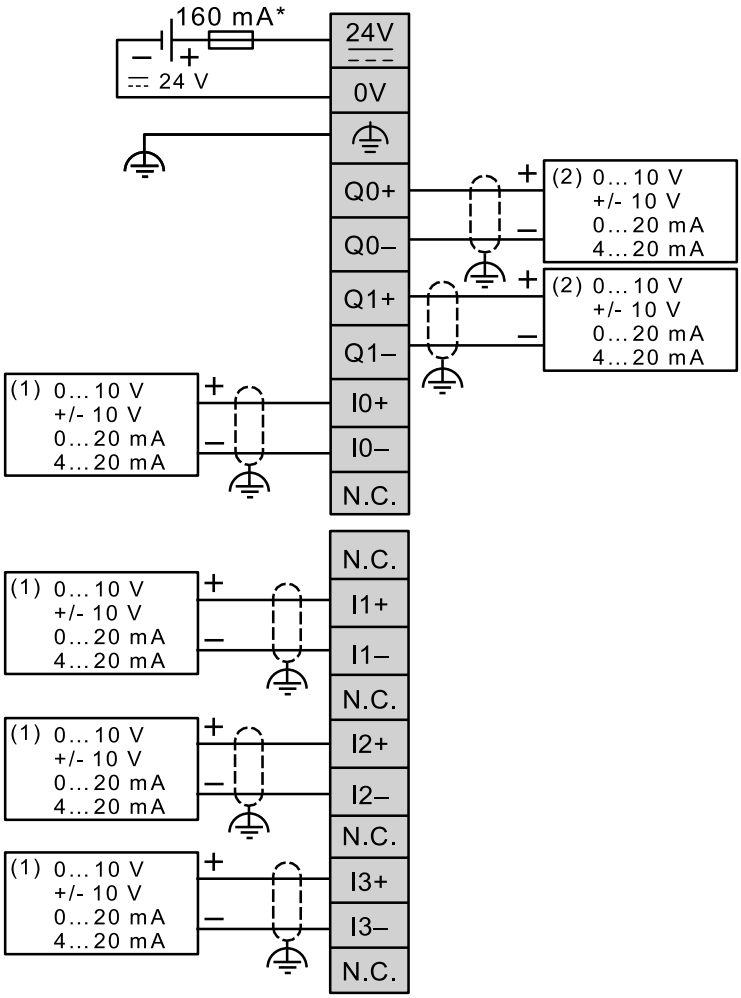

In order to connect the Geolux instrument to the TM3AM6 module, the first step is to configure the selected input port as analog current input operating on 4 – 20 mA range. This is done by using Schneider software. After the analog input module is configured, the second step is to connect the Geolux instrument to the TM3AM6 module, according to the following schematic diagram:

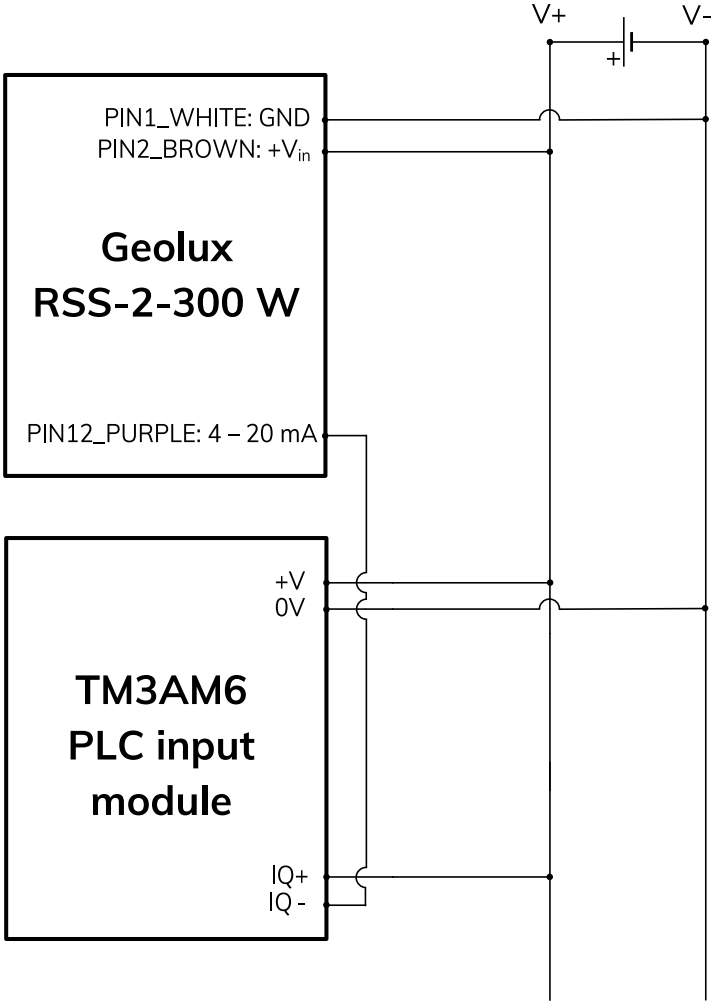

It is important to note that the 4 – 20 mA wire from the Geolux instrument should be connected to negative (-), not positive (+) terminal of the analog input port.

4 Installing the Surface Velocity Radar

The surface velocity radar must be installed above the water surface, pointing toward the water surface at a vertical angle. Recommended minimum height above the water surface is 1 meter, with maximum height up to 20 meters. Recommended vertical angle is 45 degrees.

Picture 5 shows how the radar should be positioned relative to the water surface.

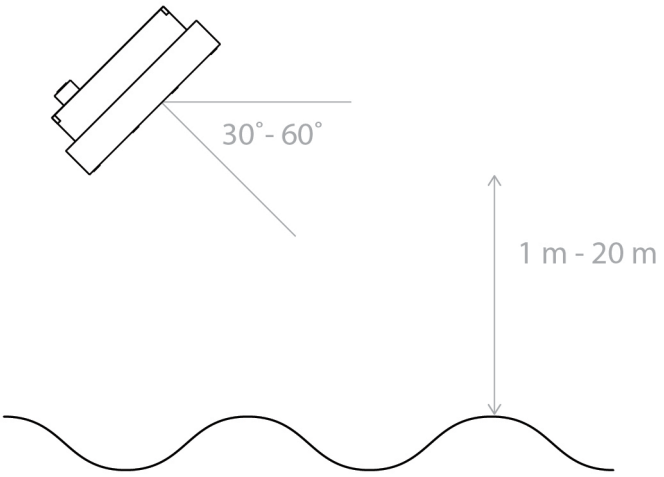

Picture 5. Installing the Surface Velocity Radar

4.1. Instrument Mounting and Location Selection

To achieve the specified accuracy, it is important to properly select the measurement site and to install the sensor with proper horizontal and vertical tilt angle. The tilt angle to horizontal plane for surface velocity sensor should be between 30° and 60°, and if instrument is mounted with reasonable tolerances to the pole this should be maintained. For optimal operation and best results, the instrument should be oriented in parallel with the water flow direction. Any deviation from parallel water flow direction will introduce offset of the real measurement value, more precisely, the value will be lower than actual surface velocity of the water. It is recommended that the instrument is pointed upstream, so that the water flows towards the instrument.

The height of the instrument above the water surface and the inclination determine area on the surface that is covered by the radar beam. This measurement area should be clear of any obstacles. The structure holding the instrument (pole, bridge fence, etc.) must be solid and without vibrations. There should be no vegetation between the radar and the measurement area because it could affect measurement accuracy.

Water surface directly below the sensor should be clean of vegetation, rocks, sand deposition or other obstacles that could affect measurement.

Surface velocity radar beam will cover an elliptical area on the water surface. The radar reports average surface velocity of the covered area and instrument uses complex Kalman filters with physical modeling of the water flow to give stable measurements even under turbulent conditions. However even the moderate waviness of the water surface will improve the measurement, if the water flow is strongly turbulent, fluctuations in measured data could be expected as well as somewhat reduced measurement accuracy. If strongly turbulent flow can be expected at monitoring site, then the filter length of the radar should be configured to 120 or more.

4.2. Measurement Quality Indicator

Geolux RSS-2-300W instrument is constantly calculating various parameters of the signal in the signal processing algorithms and will continuously, along with measurement data, report the measurement quality. Quality indicator value is in range from 0 (the best quality) to 3 (the worst quality) and can be used to interpret data in the analysis software with better understanding and confidence.

For example, when the radar is mounted on the railway bridge, one of common applications, measurements will be very good quality most of the time except when train is passing the bridge due to the extensive vibrations. In this case radar will still report measurements but values could be quite wrong, but also the measurement quality indicator value will go up to the higher value. It is up to every user to interpret the quality indicator value for their application, but general recommendation is that measurements with quality indicator 3 cannot be trusted, value 2 could be questionable, and values 1 and 0 are very good and accurate.

4.3. Rain and Wind

Geolux RSS-2-300W instrument has integrated internal software filters to filter out effects of rain, fog or wind both for surface velocity. These filters however have some limitations. Majority of measurement inaccuracies caused by environmental factors can be solved by proper sensor installation.

For rain and snow suppression, the most effective solution is to mount the radar so that it points upstream and the water flows towards the radar. As rain falls down and the radar is tilted downwards, rain droplets will move away from the radar, while the water flows towards the radar. The radar can then easily distinguish the water movement from rain movement. To further improve rain filtering, the radar should be configured to report only incoming direction of water flow. In this case, the radar will completely ignore all movement with direction going away from the sensor.

Influence of the wind on the accuracy of measured data is, in most cases small and can be neglected. The only exception is strong wind as it will create surface waves that are traveling in different direction from the water flow. This can affect surface measurement accuracy.

4.4. Interference and Multiple Radars

Surface velocity radar operates in K band, in frequency range around 24.125 GHz. Frequency stability and phase noise of the internal oscillator is very good and always trimmed in factory to precise central frequency but even with the best possible trimming and most stable oscillators it is very unlikely that two devices will be working on the exact same frequency to cause interference. Doppler frequency shift caused by water in speed range up to 15 m/s is measured in kHz frequency shift. As this frequency shift is relatively small in comparison to the central frequency, in most cases below 0.00005%, it will be required to keep difference between central frequencies of two radars in the same range to get interference.

Similarly, as interference from two or more surface velocity radars on the same location it is very unlikely that other radiation sources in K band will also affect radar measurements. It is possible that some wideband radiation sources can introduce small and impulse interference for the short period of time, but this should not, or is very unlikely to affect measurements reported by radar sensor continuously.

4.5. Fogging and Evaporation

Generally, radar sensors are not affected by fog or evaporation of water unless very heavy evaporation is present and water density in the air is very high. Very high amount of evaporation can introduce reflections and can affect measurement on surface velocity sensor. In the case of evaporation, the best solution for surface velocity sensor problem solving is to use outbound flow direction and to configure sensor with only downstream directional filter. As evaporation is traveling upwards from the water surface, inbound or approaching to the radar, directional filter will solve the problem in most of the cases.

4.6. Reflections

Water is very reflective medium for the radar waves and most of the power transmitted from radar transmitter will be reflected from the water surface. Reflections of the radar transmitted power beam follow the same physical laws as in optics and every time radar beam hits the surface part of the power is reflected away from the radar, part of the power is reflected towards the radar and only a small part of power is absorbed by the water. Depending on the surface roughness and incident angle ratio between power reflected in the direction away from the radar and direction back towards the radar can significantly vary.

Ratio between reflections is determined by water surface roughness and rule of thumb can be applied where more rough water surface will lead to stronger reflection inbound the radar thus easier detection and greater SNR (signal to noise) ration on the radar which enables more accurate measurement. Geolux surface velocity radar is designed with special techniques to achieve accurate measurements even in the very small SNR environments so the required surface roughness of 1 mm is usually enough for the precise measurements.

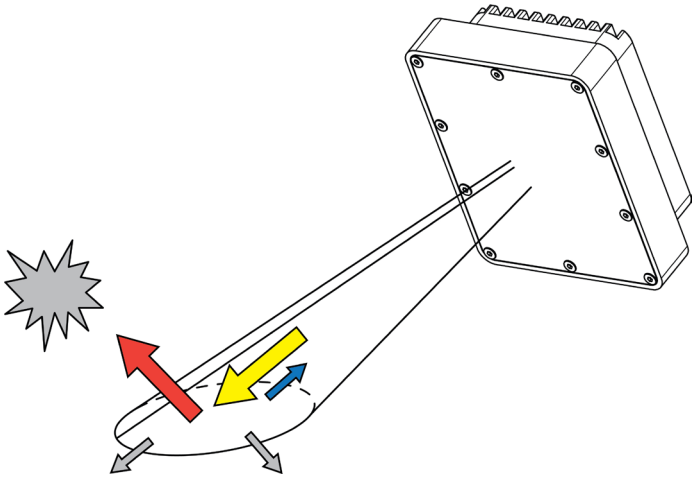

When selecting location for surface velocity sensor additional care must be taken to avoid reflected power away from the radar (red arrow) to hit moving objects (gray cloud) on the side of water channel as this can cause additional reflection to inbound the radar and can significantly affect measurement accuracy. Installations where pedestrians, cars or other objects are moving in front of the sensor closer than 75 m should be avoided as it is proven in practice that it can cause problems.

Indoor applications are generally not recommended as it could lead to wrong readings due to the reflection of the radar beam and hitting any moving or rotating object which could cause false readings.

5 Surface Velocity Radar Settings

Communication Interfaces Parameters

Baud rate

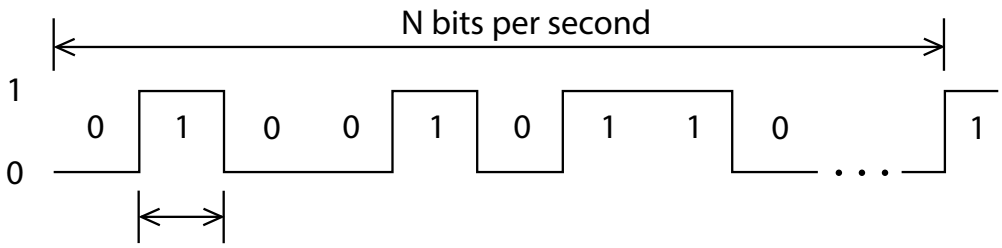

Baud rate - Configures the baud rate (bits per second) for serial communication on both RS-232 and RS-485 data lines. This setting controls how many bits are sent on the communication line in one second. The available values are standardized. Using higher baud rate over longer lines may introduce errors in transferred data. The default instrument baud rate is 9600 bps.

RS-232 and RS-485 protocol

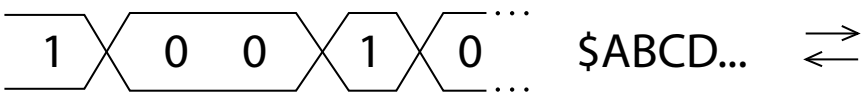

RS-232 protocol - Selects the communication protocol to be used for data communication on RS-232 interface. The NMEA protocol is a GPS-like human readable messaging protocol where each data packet contains a checksum for data integrity verification. SDI-12 protocol is used for interfacing older type of Geolux SDI-12 adapters. Unless the instrument is connected to an older Geolux SDI-12 adapter, NMEA protocol must be selected.

RS-485 protocol - Selects the communication protocol to be used on RS-485 half-duplex interface. HS protocol is a simple request-response protocol for the simplest applications. Modbus RTU protocol is a standardized protocol which is commonly used in automation and instrumentation as it provides all measurements with detailed diagnostics of device operation and the possibility to change the instrument's operating parameters.

Device ID

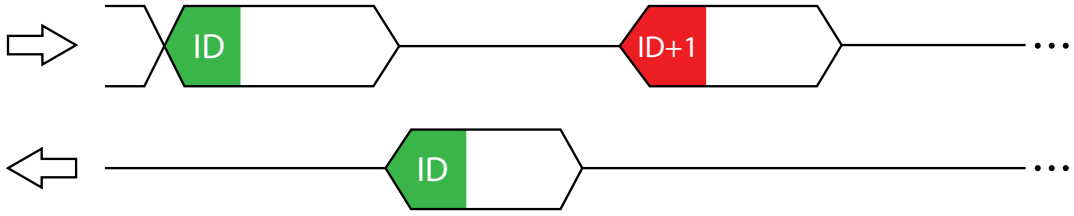

Device ID - Configures the device (slave) ID to be used on RS-485 interface protocols (Modbus RTU or HS). Both protocols use request/response format and allow multiple instruments to be connected on the same bus. When a remote master transmits the request message, it will use the device ID as a device address. All instruments will receive the request, but only the instrument with matching device ID will answer to the received request.

Modbus settings

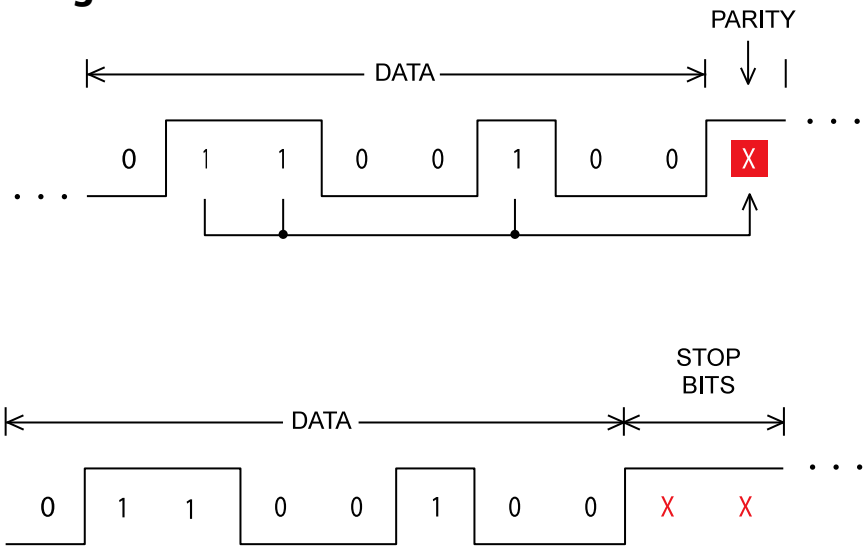

Modbus settings - Configures the parity and number of stop bits used in communication. Parity is used in serial communication for basic error detection. When parity is set to none, no parity is used, and no error detection is possible on bit level. When parity is set to odd parity, an additional bit is added to the communication that will be set to 1 when there is odd number of bits with value 1 in the 8-bit payload byte. Similarly, when parity is set to even parity, an additional bit is added to the communication that will be set to 1 when there is even number of bits with value 1 in the 8-bit payload byte. In general, all bytes on the receiver side where the parity bit is not matching the message will be discarded. Default setting on most devices that use Modbus is even parity. Stop bits are added to the end of each data byte transferred over serial communication, to allow pause between two bytes. The default setting is even parity and one stop bit.

Warm up time

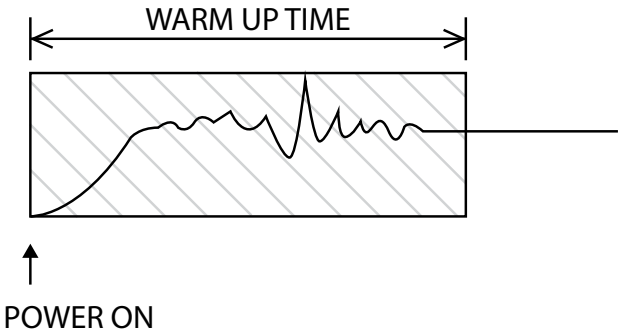

Warm up time - The time after sensor power-up, during which all measurements are ignored. This time is used to settle auto-gain parameters, Kalman filter values, averaging filter, and all other operational parameters. It is recommended to set this value to a minimum of 5 seconds. In extreme cases where a quick response after unit power-up is required, 3 seconds can be used, with a possibility of losing measurement accuracy.

4 – 20 mA output

4 – 20 mA output - this parameter is used to select the value that will be presented on the 4 – 20 mA output. When velocity is selected the output current will be proportional to the measured velocity. When none is selected the 4 – 20 mA output will be disabled.

4 – 20 mA min. and 4 – 20 mA max.

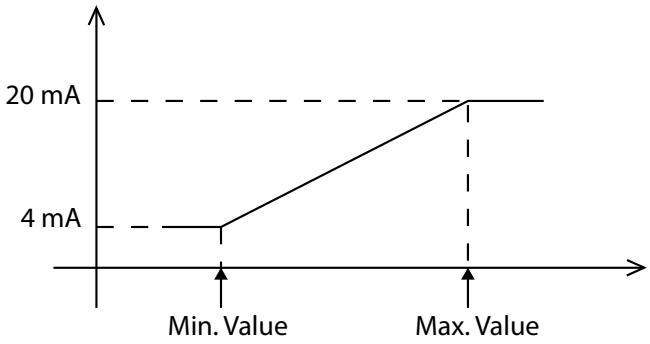

4 – 20 mA min. – To configure the 4 – 20 mA output range, the minimum measured value which will correspond to 4 mA analog output needs to be set. The value is set in the currently configured measurement unit. Example: if values measured by the instrument are expected to be within the range of 700 mm/s to 1500 mm/s, it is recommended to configure the minimum value to slightly below 700 mm/s (for example 500 mm/s). Alternatively, if the resolution is not critical, then minimum value for 4 – 20 mA output can be left to the instrument minimum of 0 mm/s.

4 – 20 mA max. – To configure the 4 – 20 mA output range, the maximum measured value which will correspond to 20 mA analog output needs to be set. The value is set in the currently configured measurement unit. Example: if values measured by the instrument are expected to be within the range of 700 mm/s to 1500 mm/s, it is recommended to configure the maximum value to slightly above 1500 mm/s (for example 2000 mm/s). Alternatively, if the resolution is not critical, then maximum value for 4 – 20 mA output can be left to the instrument maximum of 15000 mm/s.

Processing Parameters

Sensitivity level

Sensitivity level – Configures the radar sensitivity level. The sensitivity level threshold is used by the radar to determine whether the reflected signal is too low to detect any flow. If the instrument is incorrectly reporting flow when there is no water in the channel, it's necessary to increase the value of this parameter.

SNR threshold

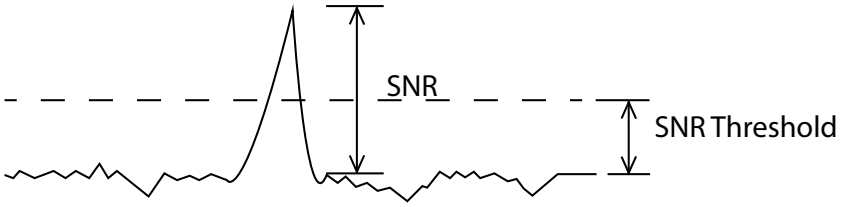

SNR threshold – The minimal Signal to Noise Ratio that is required to detect the surface velocity. If the actual measured SNR is lower than the threshold, the instrument will not report any surface velocity. Setting SNR threshold to a higher value will result with more robust measurements but may also result with no measurements when the water is very smooth. As a general rule of thumb, the measurements with SNR below 10 dB may be inaccurate, and measurements with SNR below 6 dB should not be trusted. The SNR threshold should be set accordingly. The SNR is calculated according to the following formula, where A_peak is the absolute signal level amplitude at the detected peak, and A_avg is the average signal level amplitude of the complete signal, except for the detected peak:

$$SNR = 10 * \log(A_peak / A_avg)$$

Filter length

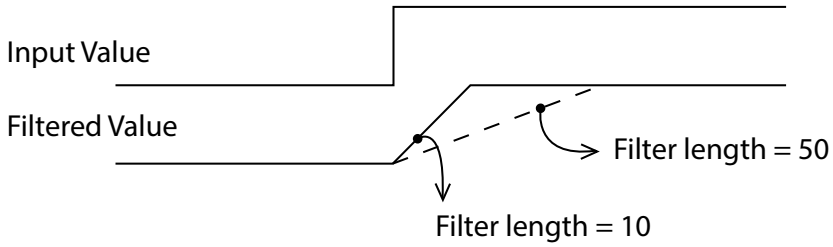

Filter length – The length of the averaging filter, in number of readings, to smoothen the measured values. The instrument performs 10 readings per second, so a filter length value of 50 will result in 5 second integration time. When using longer filter lengths, more measured values are used for filtering, and the resulting data will be smoother. However, when the surface velocity changes, it will take more time for the new measurement to be reported. Typically, this parameter should be set to a value between 50 and 200. For highly turbulent water, larger filter length is recommended.

Direction filter

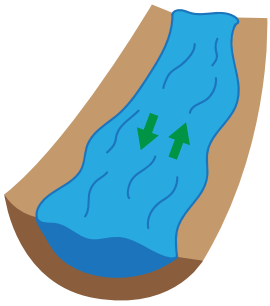

Direction filter – Direction filter is used to choose whether the instrument will detect flow in both directions, or if it should detect only incoming or only outgoing flow. If the direction filter is set to both directions, the instrument will measure the flow velocity in any direction and will also report the actual direction of the flow. If the direction filter is set to incoming direction, then the instrument will reject all radar returns that correspond to outgoing flow, and vice versa. On monitoring sites where it is expected that the flow will always be in only one direction, it is recommended to properly configure this parameter to either incoming or outgoing, as that will improve the consistency of measurements.

Extra fast

Extra fast – Enables or disables the extra fast setting. When the radar is powered-up in normal operation mode, it will need a few seconds to self-configure in an optimal way for the current flow conditions. This is not necessary with stable flow conditions when the strength of the reflected radar signal is high (which can be checked by monitoring the reported SNR value). In that case, enabling the extra fast setting will force the radar to skip self-configuration and save a few seconds at power-up before the first measurement is reported.

Peak width

Peak width – When a velocity peak is detected, this parameter tells the radar how wide to consider the side velocities for the final velocity report. If the flow is uniform across the surface, then normal peak width can be selected.

Measurement Parameters

Velocity unit

Velocity unit – The measurement unit used to report the measured velocity value. For NMEA protocol which is used over RS-232 connection, the velocity is reported as an integer value. To preserve higher precision with integer numbers, the measured velocity will be multiplied by 10 for cm/s, m/s, km/h, mph, fps and fpm when being transferred over RS-232. When mm/s units are used, the measured values will not be multiplied by 10. Geolux Instrument Configurator application internally handles the multiplication factor which is used over RS-232 protocol, and it displays the correct values to the user.

PGA sensitivity

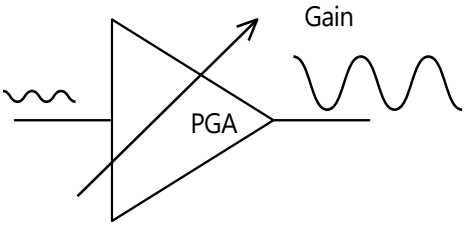

PGA sensitivity – This parameter limits the maximum gain (amplification level) of the internal programmable gain amplifier. It is strongly recommended to use the default value 8, which allows the internal signal amplifier to use the maximum gain when the reflected radar signal is very low. Setting this value to a lower value is used only when the instrument is mounted very close to the water surface, typically less than 1 meter, and in that case this parameter should be set to a value 4 or 5.

Velocity min. and Velocity max.

Velocity min. - This parameter is used for setting up the minimum velocity value of interest.
Velocity max. - This parameter is used for setting up the maximum velocity value of interest.

6 Data Interface

Geolux RSS-2-300W surface velocity radar offers multiple data interfaces, in order to make the integration of the device with existing SCADA/telemetry systems easy.

6.1. Serial RS-232 Interface

Serial RS-232 interface is used for direct connection of a single surface velocity radar unit with the computer. The serial interface is used both for retrieving live flow measurements and for configuration of the surface velocity radar device. Geolux provides a PC application for unit configuration and flow monitoring free of charge.

Default communication parameters are:

Bitrate:	9600 bps
Data bits:	8
Stop bits:	1
Parity:	None

A NMEA-like communication protocol is used to deliver flow measurements over RS-232 interface. Detailed description of the protocol is given in the Chapter 7 of this user manual.

6.2. Serial RS-485 Interface

Serial RS-485 interface is used for connecting multiple surface velocity radars to a single data logger. RS-485 interface uses a different protocol then the protocol used over RS-232 interface, in order to allow multiple surface velocity radars connected on a single RS-485 bus. The main difference from the protocol used over RS-232 interface is that the flow measurements are not reported automatically, but are instead reported only after being requested by the master device (data logger unit). Detailed description of the protocol is given in the Chapter 7 of this user manual.

Default communication parameters are:

Bitrate:	9600 bps
Data bits:	8
Stop bits:	1
Parity:	Even
Device ID:	1

7 Data Protocols

Geolux RSS-2-300W surface velocity radar supports the following data protocols:

- NMEA-like protocol on RS-232 interface that constantly outputs the detected speed and reflected signal power, and also the current measured tilt angle
- Servicing protocol on RS-232 interface for configuring the unit
- Request-response protocol on RS-485 interface that allows multiple units to be used on a single RS-485 bus
- Modbus-RTU protocol on RS-485 interface which is supported by variety of third-party data loggers

Support for additional protocols is available upon customer request.

7.1. NMEA Protocol (RS-232)

NMEA protocol is based on the standard protocol family widely used by the navigation equipment. NMEA protocol is sentence oriented, and is capable of sending multiple sentences with different information. The sentence content is designated by the starting keyword which is different for each sentence type. NMEA sentences are terminated with the checksum which makes this protocol extremely reliable. NMEA protocol is singe-direction protocol: data is only transmitted from the surface velocity radar.

At RS-232 interface the device periodically outputs following data sentences:

Direct flow measurement report

$RDTGT,D1,S1,L1*CSUM<CR><LF>

$RDTGT:	The keyword sent on the beginning of each report. This sentence is sent whenever there is detected flow.
D1:	The direction of the flow, as detected by the instrument (1 incoming, -1 outgoing). Geolux Instrument Configurator displays this value as “In” for incoming and “Out” for outgoing direction.
S1:	The measured surface velocity, without applying additional averaging filter (velocity is reported as velocity*10 for m/s, km/h, mph, fps and fpm and as velocity*1 for mm/s and cm/s). Geolux Instrument Configurator internally handles the multiplication factor and displays the correct values to the user.
L1:	The relative level strength of the returned radar signal. This value is used internally by the auto-gain algorithm which adjusts the gain levels of the internal signal amplifiers.
CSUM:	The check sum of the characters in the report from $ to * excluding these characters.

AKRIBIS · www.akribis.info · contacto@akribis.info

Average flow measurement report

$RDAVG,S1*CSUM<CR><LF>

$RDAVG: The keyword sent on the beginning of the report. This sentence reports smoothed flow measurement. This is the preferred reading, since it filters out minor fluctuations in flow speed reading due to waves.

S1: The measured surface velocity with additional average filter applied (velocity is reported as velocity*10 for m/s, km/h, mph, fps and fpm and as velocity*1 for mm/s and cm/s). Geolux Instrument Configurator internally handles the multiplication factor and displays the correct values to the user.

CSUM: The check sum of the characters in the report from $ to * excluding these characters.

Tilt angle report

$RDANG,A*CSUM<CR><LF>

$RDANG: The keyword sent on the beginning of each angle report.

A: Device tilt angle in degrees, as measured by the internal tilt angle sensor. The angle is relative to the horizontal plane.

CSUM: The check sum of the characters in the report from $ to * excluding these characters.

Signal to noise ratio (SNR) report

$RDSNR,S1,S2*CSUM<CR><LF>

$RDSNR: The keyword sent on the beginning of each SNR report.

S1: Signal to Noise Ratio of the detected signal in dB. SNR is the difference between signal level corresponding to measured velocity and the noise floor level. Low SNR levels indicate that the measured value may be inaccurate.

S2: The average Signal to Noise Ratio of the detected signal. SNR is the difference between signal level corresponding to measured velocity and the noise floor level. Low SNR levels indicate that the measured value may be inaccurate.

CSUM: The check sum of the characters in the report from $ to * excluding these characters.

Quality of signal report

$QOS,Q1,Q2*CSUM<CR><LF>

$QOS: The keyword sent on the beginning of each quality of signal report.

Q1: This is an indicator of the Quality of the Service (measurements) related to the instrument vibrations. If the instrument is vibrating, the measurements may be incorrect, and the amount of vibrations is measured and reported. Geolux Instrument Configurator color-codes

AKRIBIS · www.akribis.info · contacto@akribis.info

these values. Measurements can be trusted when QoS is green. Measurements may be inaccurate when the indicator is yellow or red.

Q2: This is an indicator of the Quality of the Service (measurements) related to the radar signals. Geolux Instrument Configurator color-codes these values. Measurements can be trusted when QoS is green. Measurements may be inaccurate when the indicator is yellow or red.

CSUM: The check sum of the characters in the report from $ to * excluding these characters.

Quality of signal factors and corresponding color codes:

0 – Excellent measurement quality (Green)
1 – Good measurement quality (Green)
2 – Low measurement quality (Yellow)
3 – Unacceptable measurement quality (Red)

7.2. Servicing Protocol (RS-232)

The servicing protocol is used to retrieve and modify device operating parameters. Various device settings, such as unit system and filtering parameters are configured using this protocol. Since NMEA protocol is one way (it only outputs the data), the servicing protocol is always active.

To make radar configuration easy, Geolux provides the Geolux Instrument Configurator utility application. Regular users do not need to be concerned about the servicing protocol used between the Geolux Instrument Configurator and the surface velocity radar device. Geolux Instrument Configurator is described in the Chapter 7 of this manual.

The servicing protocol listens on RS-232 serial port for incoming requests, and on each received request, it will answer back.

The following requests are recognized by the servicing protocol and every command should be followed by <CL>, <LF> or <CR><LF> (enter):

Change interface parameters

Baud rate - Configures the baud rate (bits per second) for serial communication on both RS-232 and RS-485 data lines. This setting controls how many bits are sent on the communication line in one second. The available values are standardized. Using higher baud rate over longer lines may introduce errors in transferred data. The default instrument baud rate is 9600 bps.

#set_baud_rate = 9600
#set_baud_rate = 19200
#set_baud_rate = 38400
#set_baud_rate = 57600
#set_baud_rate = 115200

RS-232 protocol - Selects the communication protocol to be used for data communication on RS-232 interface. The NMEA protocol is a GPS-like human readable messaging protocol where each data packet contains a checksum for data integrity verification. SDI-12 protocol is used for interfacing older type of Geolux SDI-12 adapters. Unless the instrument is connected to an older Geolux SDI-12 adapter, NMEA protocol must be selected.

#set_proto=nmea

AKRIBIS · www.akribis.info · contacto@akribis.info

RS-485 protocol - Selects the communication protocol to be used on RS-485 half-duplex interface. HS protocol is a simple request-response protocol for the simplest applications. Modbus RTU protocol is a standardized protocol which is commonly used in automation and instrumentation as it provides all measurements with detailed diagnostics of device operation and the possibility to change the instrument's operating parameters.

#set_485_proto=modbus_rtu
#set_485_proto=hs

Device ID - Configures the device (slave) ID to be used on RS-485 interface protocols (Modbus RTU or HS). Both protocols use request/response format and allow multiple instruments to be connected on the same bus. When a remote master transmits the request message, it will use the device ID as a device address. All instruments will receive the request, but only the instrument with matching device ID will answer to the received request.

#set_can_id=<1-247>

Modbus settings - Configures the parity and number of stop bits used in communication. Parity is used in serial communication for basic error detection. When parity is set to none, no parity is used, and no error detection is possible on bit level. When parity is set to odd parity, an additional bit is added to the communication that will be set to 1 when there is odd number of bits with value 1 in the 8-bit payload byte. Similarly, when parity is set to even parity, an additional bit is added to the communication that will be set to 1 when there is even number of bits with value 1 in the 8-bit payload byte. In general, all bytes on the receiver side where the parity bit is not matching the message will be discarded. Default setting on most devices that use Modbus is even parity. Stop bits are added to the end of each data byte transferred over serial communication, to allow pause between two bytes. The default setting is even parity and one stop bit.

#set_485_modbus_type=0	(no parity, one stop bit)
#set_485_modbus_type=1	(no parity, two stop bits)
#set_485_modbus_type=2	(even parity, one stop bit)
#set_485_modbus_type=3	(odd parity, one stop bit)

Warm up time - The time after sensor power-up, during which all measurements are ignored. This time is used to settle auto-gain parameters, Kalman filter values, averaging filter, and all other operational parameters. It is recommended to set this value to a minimum of 5 seconds. In extreme cases where a quick response after unit power-up is required, 3 seconds can be used, with a possibility of losing measurement accuracy.

#set_dead_time=<3-100>

4-20 mA output - This parameter is used to select the value that will be presented on the 4 - 20 mA output. When velocity is selected the output current will be proportional to the measured velocity. When selecting none the 4-20 mA output will be disabled.

#set_an420_type=velocity
#set_an420_type=none

4-20 mA min. - To configure the 4-20 mA output range, the minimum measured value which will correspond to 4 mA analog output needs to be set. The value is set in the currently configured measurement unit. Example: if values measured by the instrument are expected to be within the range of 700 mm/s to 1500 mm/s, it is recommended to configure the minimum value to slightly below 700 mm/s (for example 500 mm/s). Alternatively, if the resolution is not critical, then minimum value for 4-20 mA output can be left to the instrument minimum of 0 mm/s.

#set_an420_min=<value>

4-20 mA max. – To configure the 4-20 mA output range, the maximum measured value which will correspond to 20 mA analog output needs to be set. The value is set in the currently configured measurement unit. Example: if values measured by the instrument are expected to be within the range of 700 mm/s to 1500 mm/s, it is recommended to configure the maximum value to slightly above 1500 mm/s (for example 2000 mm/s). Alternatively, if the resolution is not critical, then minimum value for 4-20 mA output can be left to the instrument maximum of 15000 mm/s

#set_an420_max=<value>

Change processing parameters

Sensitivity level - Configures the radar sensitivity level. The sensitivity level threshold is used by the radar to determine whether the reflected signal is too low to detect any flow. If the instrument is incorrectly reporting flow when there is no water in the channel, it's necessary to increase the value of this parameter.

#set_thld=<0-100>

SNR threshold - The minimal Signal to Noise Ratio that is required to detect the water flow. If the actual measured SNR is lower than the threshold, the instrument will not report any flow. Setting SNR threshold to a higher value will result with more robust measurements but may also result with no measurements when the water is very smooth. As a general rule of thumb, the measurements with SNR below 10 dB may be inaccurate, and measurements with SNR below 6 dB should not be trusted. The SNR threshold should be set accordingly.

#set_thld_snr=<0-5120>

Filter length - The length of the averaging filter, in number of readings, to smoothen the measured values. The instrument performs 10 readings per second, so a filter length value of 50 will result in 5 second integration time. When using longer filter lengths, more measured values are used for filtering, and the resulting data will be smoother. However, when the surface velocity changes, it will take more time for the new measurement to be reported. Typically, this parameter should be set to a value between 50 and 200. For highly turbulent water, larger filter length is recommended.

#set_filter_len=<1-1000>

Direction filter - Direction filter is used to choose whether the instrument will detect flow in both directions, or if it should detect only incoming or only outgoing flow. If the direction filter is set to both directions, the instrument will measure the flow velocity in any direction and will also report the actual direction of the flow. If the direction filter is set to incoming direction, then the instrument will reject all radar returns that correspond to outgoing flow, and vice versa. On monitoring sites where it is expected that the flow will always be in only one direction, it is recommended to properly configure this parameter to either incoming or outgoing, as that will improve the consistency of measurements.

#set_direction=in
#set_direction=out
#set_direction=both

Extra fast - Enables or disables the extra fast setting. When the radar is powered-up in normal operation mode, it will need a few seconds to self-configure in an optimal way for the current flow conditions. This is not necessary with stable flow conditions when the strength of the reflected radar signal is high (which can be checked by monitoring the reported SNR value). In that case, enabling the extra fast setting will force the radar to skip self-configuration and save a few seconds at power-up before the first measurement is reported.

#set_extra_fast=0 (Disabled)
#set_extra_fast=1 (Enabled)

Peak width - When a velocity peak is detected, this parameter tells the radar how wide to consider the side velocities for the final velocity report. If the flow is uniform across the surface, then normal peak width can be selected.

#set_peak_width=0 (Very narrow)
#set_peak_width=1 (Narrow)
#set_peak_width=2 (Normal)
#set_peak_width=3 (Wide)

Change measurement parameters

Velocity unit - The measurement unit used to report the measured velocity value. For NMEA protocol which is used over RS-232 connection, the velocity is reported as an integer value. To preserve higher precision with integer numbers, the measured velocity will be multiplied by 10 for cm/s, m/s, km/h, mph, fps and fpm when being transferred over RS-232. When mm/s units are used, the measured values will not be multiplied by 10. This application internally handles the multiplication factor which is used over RS-232 protocol, and it displays the correct values to the user.

#set_units=kmh
#set_units=mph
#set_units=fps
#set_units=fpm
#set_units=ms
#set_units=mms
#set_units=cms

PGA sensitivity - This parameter limits the maximum gain (amplification level) of the internal programmable gain amplifier. It is strongly recommended to use the default value 8, which allows the internal signal amplifier to use the maximum gain when the reflected radar signal is very low. Setting this value to a lower value is used only when the instrument is mounted very close to the water surface, typically less than 1 meter, and in that case this parameter should be set to a value 4 or 5.

#set_sensitivity=<0-8>

Velocity min. - Available only on devices with firmware versions above 6.3.2. This parameter is used for setting up the minimum velocity value of interest.

#set_min_velocity=<value>

Velocity max. - Available only on devices with firmware versions above 6.3.2. This parameter is used for setting up the maximum velocity value of interest.

#set_max_velocity=<value>

Low power mode - Available only on devices with firmware versions above 6.3.2. This parameter is used for putting radar in low power mode.

#radar_sleep

Reset device settings to default factory settings - This command resets all settings on the device (Interface, Processing, Measurement and Profile Settings) to default factory settings.

#radar_reset_default

Retrieve current device status

#get_info

Requests the current device status. Here is an example status output:

```
# firmware:6.5.7
# serial:170269
# sensor_type:W
# direction:both
# baud_rate:9600
# dead_time:10
# can_id:1
# angle:89
# filter_type:2
# filter_len:50
# fft_integ_time:0
# pga_gain:10
# proto:nmea
# 485_proto:modbus_rtu
# 485_modbus_type:2
# units:mms
# sensitivity:8 (Auto)
# thld:124
# thld_snr:1024
# an420_type:9
# an420_min:0.000
# an420_max:10000.000
# min_velocity:0.000
# max_velocity:15000.000
# border_velocity:500.000
# extra_fast:0
# power_save:0
```

7.3. HS Protocol (RS-485)

A different data protocol is used on RS-485 interface which allows connection of multiple units on the single RS-485 line. Before the units are connected on the single RS-485 bus, each unit must be configured with a different device identifier. The device identifier is configured by using the PC application. Please check Chapter 7 for instructions.

The HS protocol is a request-response protocol which, unlike NMEA protocol, does not automatically report periodic flow measurement readings. Instead, when the unit is polled form the data logger, it responds the measurement.

The request is sent from the data logger to the surface velocity radar:

<0x25> ID CSUM

0x25: The first byte sent in the request is '%' character. Its ASCII value in HEX is 0x25.

ID: Exactly two bytes long. This is the unit ID written as two ASCII characters. For example, if the polled unit ID is 2, then ID will be sent as “02”. In HEX representation it is the following two bytes: <0x30><0x32>.

CSUM: Checksum, calculated by adding in modulo 256 the two byte values of the ID. If the device ID is 2, then ID was sent as <0x30><0x32>. Checksum is then 0x30+0x32 = <0x62>.

After receiving the request, if the device ID matches, the surface velocity radar will respond with the current averaged flow velocity reading:

<0xA5> ID SPEED CSUM

0xA5: The first byte sent in the response is byte with HEX value of 0xA5.

ID: Exactly two bytes long. This is the unit ID written as two ASCII characters. For example, if the unit ID is 2, then ID will be sent as “02”. In HEX representation it is the following two bytes: <0x30><0x32>.

SPEED: The speed readout in currently selected units, formatted as real (float) number with exactly three digits after the decimal dot separator. For example, if the current averaged speed is 5.7143, it will be reported as 5.714, or in HEX values: <0x35><0x2E><0x37><0x31><0x34><0x33>.

CSUM: Checksum, calculated by adding in modulo 256 the two byte values of the ID and all byte values from the SPEED.

The second possible command is sent from the data logger to the surface velocity radar:

<0x2b> ID CSUM

0x2b: The first byte sent in the request is ‘+‘character. Its ASCII value in HEX is 0x2b.

ID: Exactly two bytes long. This is the unit ID written as two ASCII characters. For example, if the polled unit ID is 2, then ID will be sent as “02”. In HEX representation it is the following two bytes: <0x30><0x32>.

CSUM: Checksum, calculated by adding in modulo 256 the two byte values of the ID. If the device ID is 2, then ID was sent as <0x30><0x32>. Checksum is then 0x30+0x32 = <0x62>.

After receiving the request, device goes to power save mode.

The third possible command is sent from the data logger to the surface velocity radar:

<0x2d> ID CSUM

0x2d: The first byte sent in the request is ‘-‘character. Its ASCII value in HEX is 0x2d.

ID: Exactly two bytes long. This is the unit ID written as two ASCII characters. For example, if the polled unit ID is 2, then ID will be sent as “02”. In HEX representation it is the following two bytes: <0x30><0x32>.

CSUM: Checksum, calculated by adding in modulo 256 the two byte values of the ID. If the device ID is 2, then ID was sent as <0x30><0x32>. Checksum is then 0x30+0x32 = <0x62>.

After receiving the request, device goes to normal operation mode from power safe mode.

7.4. Modbus Protocol (RS-485)

When configured in Modbus operation mode, the unit responds to Modbus requests over RS-485 data line. The baud rate and device ID configured through the PC application, and 1 stop bit, even parity, 8 data bits configuration is used.

Modbus registers that are accessed by Modbus protocol are 16-bit (2-byte) registers. Any number of registers can be read or written over Modbus.

Modbus is a request-response protocol where a master (such as data logger) sends out requests, and slave devices (such as RSS-2-300W sensor) responds. The request and response format, with examples is given in tables 3-6.

In each request, the master can either ask the slave to retrieve value of one or more registers, or the master can set the value of one or more registers. Each register holds one 16-bit value.

Table 3. Master Request Format

Name	Address	Fun	Data Start Address		Register Count		CRC16	
Length	1 byte	1 byte	2 bytes (H,L)		2 bytes (H,L)		2 bytes (L,H)	
Example	0x01	0x03	0x00	0x00	0x00	0x01	0x84	0x0A

Table 4. Request Example

Name	Content	Detail
Address	0x01	Slave address (Sensor id)
Function	0x03	Read slave info
Data start address	0x00	The address of the first register to read (HIGH)
	0x00	The address of the first register to read (LOW) – Sensor ID reg
Number of regs	0x00	High
	0x01	Low (read only 1 register)
CRC16	0x84	CRC Low
	0x0A	CRC High

Table 5. Slave (sensor) Response Format

Name	Address	Fun	Byte Count	Data		CRC16	
Length	1 byte	1 byte	1 byte	2 bytes(H,L)		2 bytes(L,H)	
Example	0x01	0x03	0x02	0x00	0x01	0x79	0x84

Table 6. Response Example

Name	Content	Detail
Address	0x01	Slave address (Sensor id)
Function	0x03	Read slave info
Data length	0x02	Data length is 2 bytes
Data	0x00	Data high byte
	0x01	Data low byte, means ID is 1
CRC16	0x79	CRC Low
	0x84	CRC High

Table 7 defines the data returned by the unit when the master requests register is read. Table 8 defines how to write device configuration. Rows highlighted in blue denote the important values measured by the sensor. Rows highlighted in green denote operating parameters that could be changed in the field. In Tables 7 and 8, field *Fun* corresponds to Modbus function codes, i.e. 0x03 – *Read holding register* and 0x06 – *Write holding register*.

Table 7. Retrieving Data from the Sensor

Fun	Register Address	Data Length	Data Range	Details
0x03	0x0000	2 bytes	1 – 247	Read device ID
	0x0001	2 bytes	0 → 9600 1 → 38400 2 → 57600 3 → 115200 4 → 19200	Read baud rate
	0x0002	2 bytes	0 → mm/s 1 → m/s 2 → mph 3 → km/h 4 → fps 5 → fpm 6 → cm/s	Read velocity unit type
	0x0003	2 bytes	0 – 15000 (mm/s)	Read instantaneous velocity
	0x0004	2 bytes	0 – 15000 (mm/s)	Read average velocity
	0x0005	2 bytes	0 – 360	Read tilt angle
	0x0006	2 bytes	0 → incoming 1 → outgoing	Read flow direction
	0x0007	2 bytes	1 – 512	Read filter length
	0x0008	2 bytes	0 – 8	Read defined PGA gain sensitivity
	0x0009	2 bytes	0 → both 1 → incoming 2 → outgoing	Read flow direction filter setting

Fun	Register Address	Data Length	Data Range	Details
0x03	0x000A	2 bytes	0 – 100	Read sensitivity level
	0x000B	2 bytes	0	Read device type, always 0
	0x000C	2 bytes	0 – 3840	Read SNR threshold (dBm * 256)
	0x000D	2 bytes	600 – 700	Read firmware code (e.g. 6.3.9)
	0x000E	2 bytes	1,2,5,10,20,50,100,200	Read current PGA gain level
	0x000F	2 bytes	0 – 2047	Read relative signal level
	0x0010	2 bytes	0 – 65535	Read instantaneous speed in selected units (integer part)
	0x0011	2 bytes	0 – 65535	Read instantaneous speed in selected units (decimal part * 1000)
	0x0012	2 bytes	0 – 65535	Read averaged speed in selected units (integer part)
	0x0013	2 bytes	0 – 65535	Read averaged speed in selected units (decimal part * 1000)
	0x0014	2 bytes	0 – 10000	Read instantaneous SNR level (dBm * 256)
	0x0015	2 bytes	0 – 10000	Read averaged SNR level (dBm * 256)
	0x0016	2 bytes	3 printable characters	Read serial number [0-2]
	0x0017	2 bytes	3 printable characters	Read serial number [3-5]
	0x0018	2 bytes	0 → excellent 1 → good 2 → low 3 → unacceptable	Read QoS - angle, vibrations - first 2 bits of first byte Read QoS - signal - second 2 bits of first byte. (example 0x0B is QOS angle 3 and QOS signal 2)
	0x0019 – 0x001A	2 bytes	0	Reserved, always 0
	0x001B	2 bytes	0 → very narrow 1 → narrow 2 → normal 3 → wide	Read peak width
	0x001C	2 bytes	0 – 15000	Read velocity min. (mm)
	0x001D	2 bytes	0 – 15000	Read velocity max. (mm)
	0x001E	2 bytes	0 → turned off 1 → turned on	Read extra fast setting
	0x001F	2 bytes	0	Reserved, always 0
	0x0051	2 bytes	0 → turned off 1 → turned on	Read low power mode

Table 8. Writing Data To The Sensor

Fun	Register Address	Data Length	Data Range	Details
0x06	0x0000	2 bytes	1 – 247	Change device ID
	0x0001	2 bytes	0 → 9600 1 → 38400 2 → 57600 3 → 115200 4 → 19200	Change baud rate
	0x0002	2 bytes	0 → mm/s 1 → m/s 2 → mph 3 → km/h 4 → fps 5 → fpm 6 → cm/s	Change velocity unit type
	0x0007	2 bytes	1 – 512	Change filter length
	0x0008	2 bytes	0 – 8	Change PGA gain sensitivity
	0x0009	2 bytes	0 → both 1 → incoming 2 → outgoing	Change flow direction filter type
	0x000A	2 bytes	0 – 100	Change sensitivity level
	0x000C	2 bytes	0 – 3840	Change SNR threshold (dBm * 256)
	0x001B	2 bytes	0 → very narrow 1 → narrow 2 → normal 3 → wide	Change peak width
	0x001C	2 bytes	0 – 15000	Change velocity min. (mm)
	0x001D	2 bytes	0 – 15000	Change velocity max. (mm)
	0x001E	2 bytes	0 → turned off 1 → turned on	Change extra fast setting
	0x0051	2 bytes	0 → turned off 1 → turned on	Change low power mode

7.4.1. Modbus Input Registers

Modbus input registers are read-only registers. By reading the Modbus input registers the user can view the device type and the firmware version, as well as real-time measurement values in 32-bit integer or 32-bit float format. Since the native Modbus registers are 16-bit registers, to store 32-bit values, two subsequent registers are used. In order to easily check the byte-order and word-order, two pairs of test registers with fixed constant values are provided. One register pair containts a fixed value of 1234567 in 32-bit integer format, and the other register pair contains a fixed value of -123.4567 in 32-bit float format.

Table 9 defines the data returned by the instrument when the master requests that the input register is read (Modbus function code 0x04). Rows highlighted in blue denote the values of interest, while the rows highlighted in green represent reserved registers which can be read but the returned value will always be equal to 0.

Table 9. Retrieving Data from Modbus Input Registers

Fun	Register Address	Data Length	Data Format	Details
0x04	0x0001	2 bytes	16-bit integer	Device type ID
	0x0002	2 bytes	16-bit integer	Firmware version
	0x0003	2 bytes		Reserved - always 0
	0x0004, 0x0005	2 bytes, 2 bytes	32-bit integer	32-bit integer control register pair containing a fixed value of 1234567
	0x0006, 0x0007	2 bytes, 2 bytes	32-bit float	32-bit float control register pair containing a fixed value of -123.4567
	0x0008 - 0x0011	2 bytes		Reserved - always 0
	0x0014, 0x0015	2 bytes, 2 bytes	32-bit float	Average surface velocity
	0x0016, 0x0017	2 bytes, 2 bytes	32-bit float	Current surface velocity
	0x0018 - 0x001F	2 bytes		Reserved - always 0
	0x0020, 0x0021	2 bytes, 2 bytes	32-bit float	Surface velocity sensor tilt angle
	0x0022 - 0x0023	2 bytes		Reserved - always 0
	0x0024, 0x0025	2 bytes, 2 bytes	32-bit float	Surface velocity SNR
	0x0026, 0x0027	2 bytes, 2 bytes	32-bit float	Surface velocity signal strength
	0x0028, 0x0029	2 bytes, 2 bytes	32-bit float	Surface flow direction
	0x002A - 0x0083	2 bytes		Reserved - always 0
	0x0084, 0x0085	2 bytes, 2 bytes	32-bit integer	Average surface velocity
	0x0086, 0x0087	2 bytes, 2 bytes	32-bit integer	Current surface velocity
	0x0088 - 0x008F	2 bytes		Reserved - always 0
	0x0090, 0x0091	2 bytes, 2 bytes	32-bit integer	Surface velocity sensor tilt angle
	0x0092 - 0x0093	2 bytes		Reserved - always 0
	0x0094, 0x0095	2 bytes, 2 bytes	32-bit integer	Surface velocity SNR
	0x0096, 0x0097	2 bytes, 2 bytes	32-bit integer	Surface velocity signal strength
	0x0098, 0x0099	2 bytes, 2 bytes	32-bit integer	Surface flow direction

7.5. SDI-12 Protocol

Supported SDI-12 commands are:
In all commands, 'a' represents the device address. Blue rows indicate that parameters can be set using this command.

Table 11. SDI-12 Commands

Name	Command	Response	Details
Address Query	?!	a<CR><LF>	Device will identify using its SDI-12 address, default address is 1
Ping Sensor	a!	a<CR><LF>	Device will respond if its address is 'a'
Address Change	aAb!	b<CR><LF>	Device will respond if its address is 'a' with its new address 'b'
Send Identification	aI!	a13GEOLUX 2300Wfff<CR><LF>	a – address SDI-12 version – 1.3 vendor identification – GEOLUX sensor model – 2300W sensor version – fff, where fff is firmware version
Start Verification	aV!	a00001<CR><LF>	One value is ready imminently
Send Data	aD0!	a+d<CR><LF>	d – verification: 0->not ready , 1->ready
Additional Data	aD1! .. aD9!	a0<CR><LF>	No values are returned for additional data.
Start Measurement	aM!/aMC!	ammm5<CR><LF>	5 values are ready within mmm seconds for M command
Send Data	aD0!	a<val0><CR><LF> a<val0><CRC><CR><LF>	val0 ▯ a±f±f+d+d+d <cl><rf> ±f - current velocity in defined units ±f - average velocity in defined units +d - average SNR in dBm +d - angle in ° +d - signal quality (3->unacceptable, 2 ->low, 1->good, 0->excellent)
Additional Data	aD1! .. aD9!	a0<CR><LF> a0<CRC><CR><LF>	No values are returned for additional data.

Name	Command	Response	Details
Concurrent Measurement	aC!/aCC!	ammm5<CR><LF>	5 values are ready within mmm seconds for C command
Send Data	aD0!	a<val0><CR><LF> a<val0><CRC><CR><LF>	val0 → a±f±f+d+d+d <cl><rf> ±f - current velocity in defined units ±f - average velocity in defined units +d - average SNR in dBm +d - angle in ° +d - signal quality (3->unacceptable, 2 ->low, 1->good, 0->excellent)
Additional Data	aD1! .. aD9!	a0<CR><LF> a0<CRC><CR><LF>	No values are returned for additional data.
Continuous Measurement	aR0! ... aR9!	a<CR><LF> a<CRC><CR><LF>	The continuous mode is not supported
Get Velocity Unit	aXGWUN!	a+d<CR><LF>	+d – measurement unit for velocity 0 – mm/s, 1 – m/s, 2 – mph, 3 – km/h, 4 – fps, 5 – fpm
Set Velocity Unit	aXGWUN+d!	a+d<CR><LF>	+d – measurement unit for velocity 0 – mm/s, 1 – m/s, 2 – mph, 3 – km/h, 4 – fps, 5 – fpm
Get Velocity Average Factor	aXGWAV!	a+d<CR><LF>	+d – averaging velocity length 1-512
Set Velocity Average Factor	aXGWAV+d!	a+d<CR><LF>	+d – averaging velocity length 1-512
Get Direction Filter Factor	aXGDFT!	a+d<CR><LF>	+d – direction filter for velocity 0 – both, 1 – incoming, 2 – outgoing
Set Direction Filter Factor	aXGDFT+d!	a+d<CR><LF>	+d – direction filter for velocity 0 – both, 1 – incoming, 2 – outgoing*
Get Velocity Sensitivity Factor	aXGSENS!	a+d<CR><LF>	+d – sensitivity level for velocity 1-100
Set Velocity Sensitivity Factor	aXGSENS+d!	a+d<CR><LF>	+d – sensitivity level for velocity 1-100

** When the direction filter is set to outgoing (2), the return values will be negative indicating outgoing flow.*

8 Geolux Instrument Configurator

Geolux provides a user-friendly PC application, Geolux Instrument Configurator, for configuring the surface velocity radar operating parameters. Additionally, the Geolux Instrument Configurator displays measurements.

When started, the Geolux Instrument Configurator displays its main window. Initially, no data is displayed, as the connection to the surface velocity radar is not established.

Picture 6. Geolux Instrument Configurator – Main Window

To connect the Geolux Instrument Configurator with the surface velocity radar, connect your PC to the radar using a serial cable connection. Then, click the *Connect* button in the upper left corner and select *Surface velocity radar* from the window which appears. In the next window, select the appropriate COM port and interface. If RS-485 interface is selected, additionally select the baud rate and the Modbus ID. In case of multiple devices connected on a single RS-485 bus, make sure that each device has a unique Modbus ID. When the *Connect* button is clicked, Geolux Instrument Configurator will try to establish a data link between your PC and the surface velocity radar. If the connection is successful, the device will appear under *Connected devices* and the flow velocity measurements will be displayed in the *Data* tab, Picture 7.

A detailed description of the displayed parameters is available when hovering the mouse over the icon of a specific parameter. Initially, only the most important parameters are displayed while the rest are hidden. By clicking the button with arrows next to the displayed parameters, the user can view all the data received from the device. Clicking the *Start recording data* starts recording the most important data which is initially displayed and saves it to a .csv file.

If RS-232 interface is selected and too many checksum errors are detected, the interface, COM port and baud rate text on the device icon under *Connected devices* will turn red indicating a communication error.

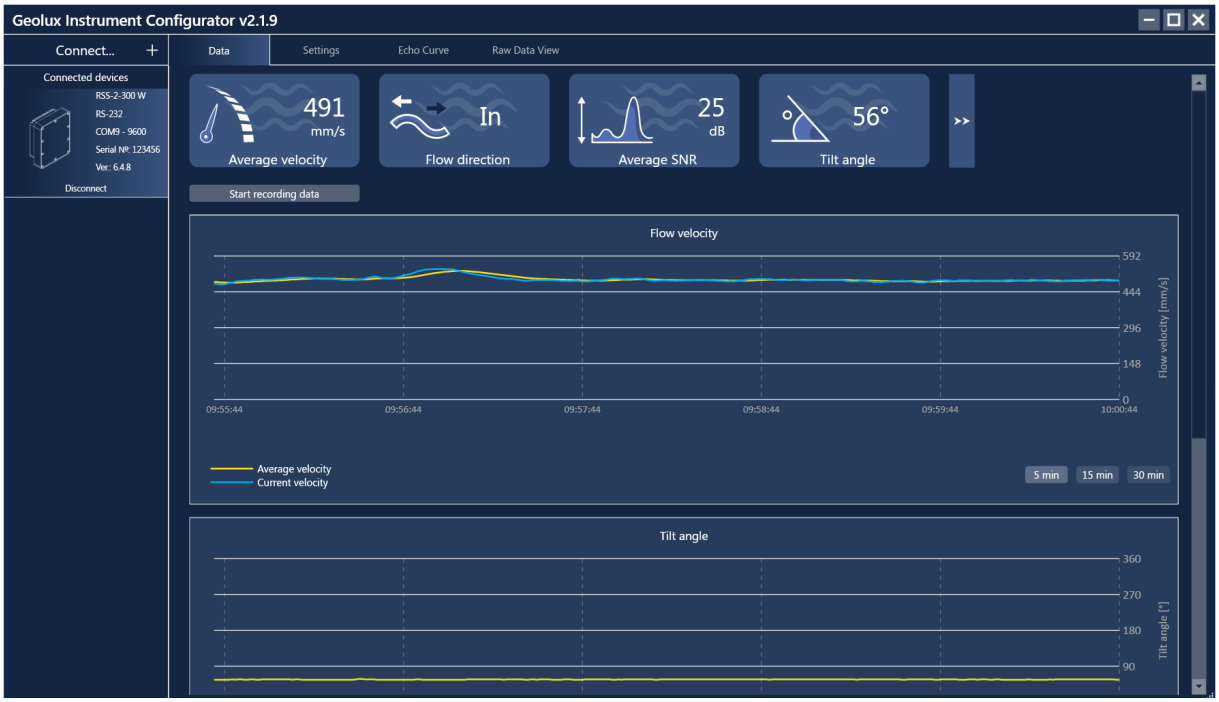

Picture 7. Geolux Instrument Configurator – Data View

Clicking the *Settings* button enables the user to configure the surface velocity radar or upgrade the device to a newer firmware version. The device settings are grouped into 3 groups: *Interfaces*, *Processing* and *Measurement* as shown in Picture 8. By clicking the name of a specific group, all the settings which belong to that group can be viewed and changed. The following settings are displayed:

Interfaces	**Processing**	**Measurement**
Baud rate	Sensitivity level	Velocity unit
RS-232 protocol	SNR threshold	PGA sensitivity
RS-485 protocol	Filter length	Velocity min.
Device ID	Direction filter	Velocity max.
Modbus settings		Extra fast
Warm up time		
4-20 mA output		
4-20 mA min.		
4-20 mA max.		

A detailed description (as described in Chapter 5. along with pictures from of this user manual) of the selected setting appears on the right side of the window when the user clicks on, or begins to change, a specific setting. When a setting is changed, the *Set* button will appear next to the setting. By clicking the *Set* button, the user confirms the change and the new settings is saved.

By clicking the *Update firmware* button on the bottom of the *Settings* tab, the user can update the firmware of the device. The *Export parameters* button exports the current settings to .txt file while the *Factory reset* button reverts all the settings to their default values.

Picture 8. Geolux Instrument Configurator – Settings View

Geolux Instrument Configurator also enables echo curve acquisition. Navigating to the *Echo Curve* tab and clicking the *Load echo curve* button loads the current echo curve. The echo curve plot shows both the incoming and outgoing directions with yellow and blue lines respectively. Depending on the *Direction filter* selected in *Settings*, the echo curve which is not of interest will be shown in grey. If desired, echo curves can be saved to a .csv file.

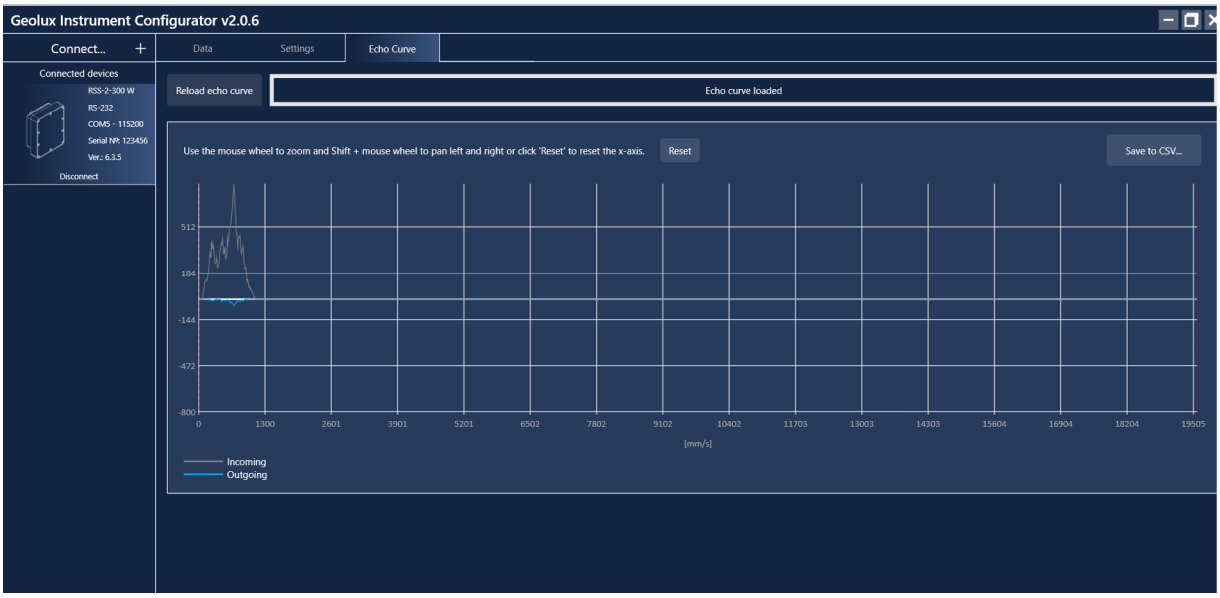

Picture 9. Geolux Instrument Configurator – Echo Curve View – Direction Filter Set to Outgoing

Navigating to the *Raw Data View* tab and clicking the *Start* button enables the user to view the raw data which is being transmitted by the device. Clicking the *Stop* button stops the acquisition of the raw data, while clicking the *Clear* button clears the previously acquired data. The *Raw Data View* tab includes a command line at the bottom so the user can manually send commands to the device.

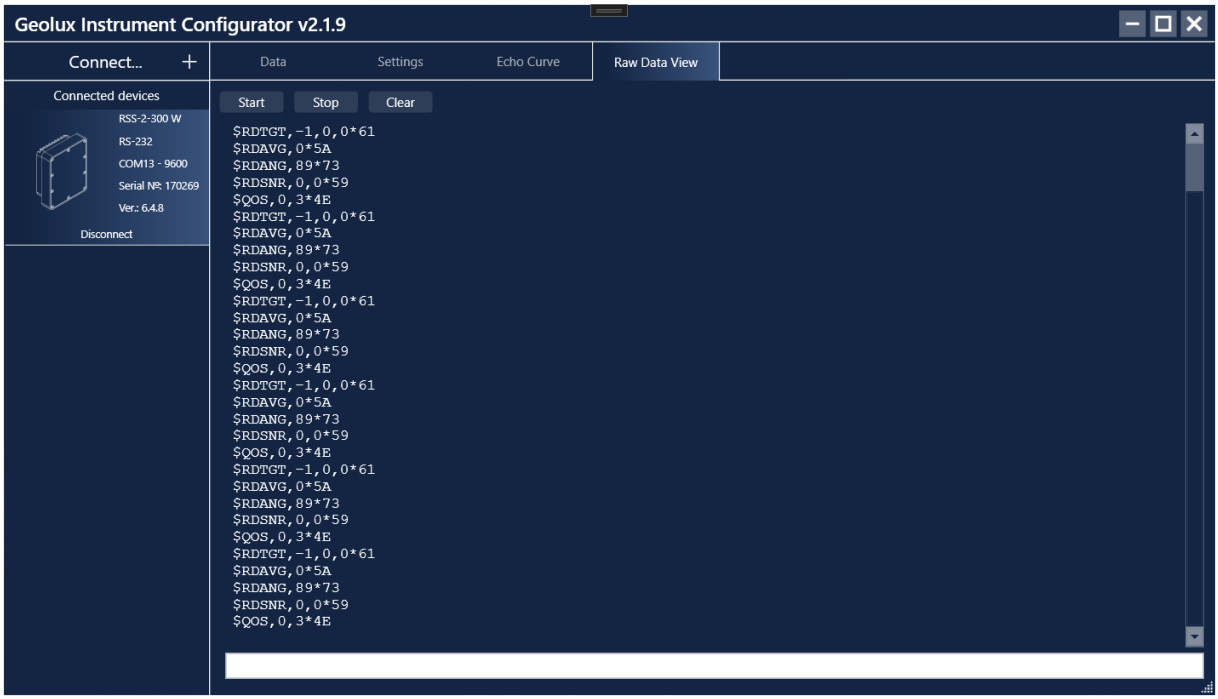

Picture 10. Geolux Instrument Configurator – Raw Data View

9 Calculating Discharge from Flow Velocity

Geolux RSS-2-300W surface velocity radar measures flow velocity at the water surface. This measurement can be used to calculate actual discharge – the total volume of water that passes through a channel cross-section in a specific period of time. Discharge measurement is important for a wide variety of purposes including flood and pollution control, irrigation, watercourse regulations and broadly as an input data for dimensioning of almost any new structure on the open channel flows.

Let us assume a rectangular channel profile, with constant flow velocity at all points, as seen in Picture 10.

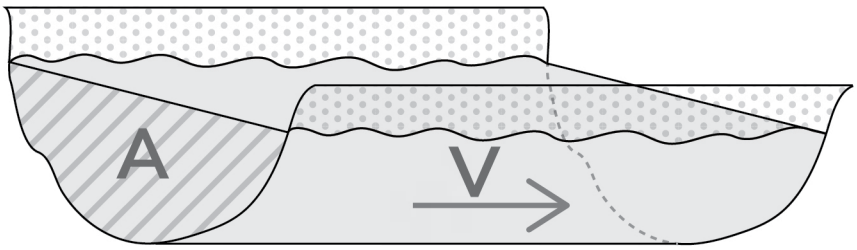

Picture 10. Simple Channel Diagram

Discharge is calculated by multiplying mean flow velocity and channel cross-section area. The cross-section area is the area of the slice in the water column made perpendicular to the flow direction.

Q = V * A

where Q is discharge (for example in m3/s), V is flow velocity (for example in m/s), and A is cross-section area (for example in m2).

For real-world measurements it is important to understand that the velocity of the moving water varies both across the stream channel and from the surface to the bottom of the stream due to friction, as in Picture 11.

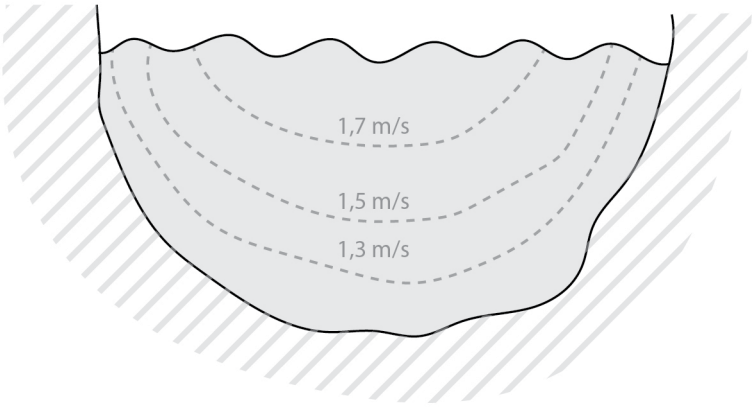

Picture 11. Flow Velocity in a Typical Cross-Section

In order to determine the discharge in a realistic channel, the area must be precisely measured by measuring water depths at a series of points across the stream and multiplying by the width of the stream within each segment represented by the depth measurement. The mean cross-section flow velocity needs to be determined from measured surface flow velocity. Studies performed by USGS reveal that, typically, the mean velocity is 80-95% of the surface velocity, the average being 85%.

Knowing non-rectangular area of the stream cross-section, and knowing the surface flow velocity, the following formula can be used:

$$Q = 0.85 * V * A$$

More details about water flow measurements can be found in the following technical note:
https://319monitoring.wordpress.ncsu.edu/files/2016/05/technote3_surface_flow.pdf

10 Troubleshooting

Geolux RSS-2-300W surface velocity radar offers multiple data interfaces, in order to make the integration of the device with existing SCADA/telemetry systems easy.

Problem	Possible solutions
The instrument does not connect to the PC application over RS-232 connection.	**1. Make sure that the cable is properly connected to the instrument** Check that the cable M12 circular connector is firmly connected and screwed to the instrument. It is not sufficient to simply attach the cable connector to the instrument connector, the cable connector must be screwed into the instrument connector. **2. Check power supply** Make sure that the power is being supplied to the instrument. A direct-current voltage, between 9 and 27 Volts must be connected to brown (+) and white (-) wires of the instrument cable. The power supply must be able to deliver at least 500 mA of current. **3. Check RS-232 connector** The yellow, green and grey wires from the instrument cable must be properly connected to the serial port on the computer. Make sure that the grey wire (signal ground) is connected – the RS-232 connection will not work if the signal ground is not connected. Also, make sure that the yellow (device Rx) and green (device Tx) are properly connected. If you are using a standard DB9 type connector on the PC computer, the wires should be connected like in the following diagram: 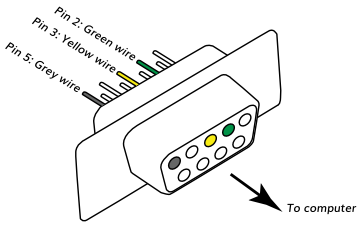 **4. Make sure that you are using the correct COM port** If there are multiple COM ports available on your computer, make sure that you are selecting the correct COM port in the PC application. If you are not certain which COM port number is assigned to the COM port that is being used to establish a connection with the instrument, try setting up the connection with each COM port available in the system, until the connection is established. 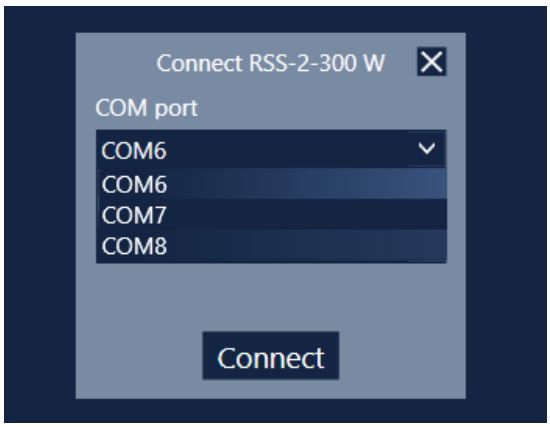

	5. Make sure that the COM port is not already open Only one application may use a single COM port in the system. Make sure that no other open application uses the same COM port that you are trying to open. **6. Try restarting the application and/or the computer** Close and reopen the configurator application and try to establish the connection again. Restart your computer and try to establish the connection to the instrument again.
The instrument does not respond over Modbus (RS-485) interface.	**1. Make sure that the cable is properly connected to the instrument** Check that the cable M12 circular connector is firmly connected and screwed to the instrument. It is not sufficient to simply attach the cable connector to the instrument connector, the cable connector must be screwed into the instrument connector. **2. Check power supply** Make sure that the power is being supplied to the instrument. A direct-current voltage, between 9 and 27 Volts must be connected to brown (+) and white (-) wires of the instrument cable. The power supply must be able to deliver at least 500 mA of current. **3. Check RS-485 connector** Make sure that the RS-485 lines on the instrument cable are properly connected to the RS-485 connector. The dark red wire should be connected to D+ line, and the orange line should be connected to D- line. Make sure that the D+ and D- lines are not swapped. Make sure that you have correctly identified and connected the dark red (magenta) wire, as there is also another bright red wire that is used to provide output power for 4-20mA output. It is possible to misidentify the wire and to connect the bright red wire to D+ instead of dark red wire. **4. Check that you are using the correct slave device ID** The default Modbus device ID is 1. The Modbus device ID can be changed by connecting the instrument to the PC application (over RS-232 connection). Connect the instrument to the PC using RS-232 connection. Open the Geolux Instrument Configurator application and establish a connection between the instrument and the PC. Then check the *Device ID* parameter and make sure that it is the same as the slave device ID used in issued Modbus requests. **5. Make sure that there are no two devices on the bus with the same Device ID.** Modbus allows to have multiple devices connected on the same bus simultaneously. Each device must have a unique slave device ID assigned, so that the bus master can distinguish between the devices. If two or more devices are assigned the same slave device ID, a bus conflict will happen and prohibit the master to correctly communicate with the slave devices. To resolve this problem, change the instrument's slave device ID to a unique number through the Geolux Instrument Configurator PC application.

	6. Check that you are using the correct Modbus connection parameters (baud rate, parity, stop bits) The default Modbus connection parameters are 9600 bps, even parity, 1 stop bit. These parameters can be changed by connecting the instrument to the PC application (over RS-232 connection). Connect the instrument to the PC using RS-232 connection. Open the Geolux Instrument Configurator application and establish a connection between the instrument and the PC. Then check and verify that all Modbus connection parameters are correct.
The 4-20 mA output is not correct.	**1. Make sure that the cable is properly connected to the instrument** Check that the cable M12 circular connector is firmly connected and screwed to the instrument. It is not sufficient to simply attach the cable connector to the instrument connector, the cable connector must be screwed into the instrument connector. **2. Check power supply** Make sure that the power is being supplied to the instrument. A direct-current voltage, between 9 and 27 Volts must be connected to brown (+) and white (-) wires of the instrument cable. The power supply must be able to deliver at least 500 mA of current. **3. Make sure that the wires from the cable are properly connected** For 4-20 mA readout, the bright red wire from the instrument cable must be connected to the positive (+) input, and the purple wire (4-20 mA sink output) must be connected to the negative (–) input of the 4-20 mA interface. **4. Check the instrument configuration parameters related to 4-20 mA output** Connect the instrument over RS-232 connection to the Geolux Instrument Configurator application. Check the parameters related to 4-20 mA: *4-20 mA min.* and *4-20 mA max.* Properly configure these parameters.

The instrument is operating, but: -it does not report surface velocity measurement, -it reports incorrect measurement	**1. Check that the instrument is positioned properly** Make sure that the instrument is installed above the water surface, pointing toward the water surface at a vertical angle. Recommended minimum height above the water surface is 1 meter, with maximum height up to 20 meters. Recommended vertical angle is 45 degrees. 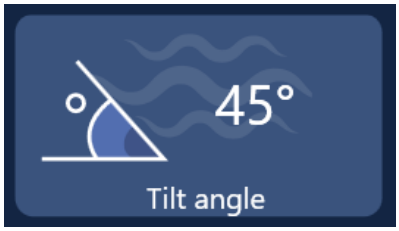 **2. Check that there are no obstructions between the instrument and the water surface** There should be no obstructions between the instrument and the water surface, so that the radar waves can freely travel from the instrument's antenna to the water surface and back. **3. Check that the distance between the instrument and the water surface is within the instrument's operating range.** Use a tape measure or a similar tool to measure the distance between the instrument's antenna and the water surface. If the distance to the water surface is greater than the instrument's operational range, the instrument will not be able to measure the surface velocity.

11 Appendix A – Mechanical Assembly

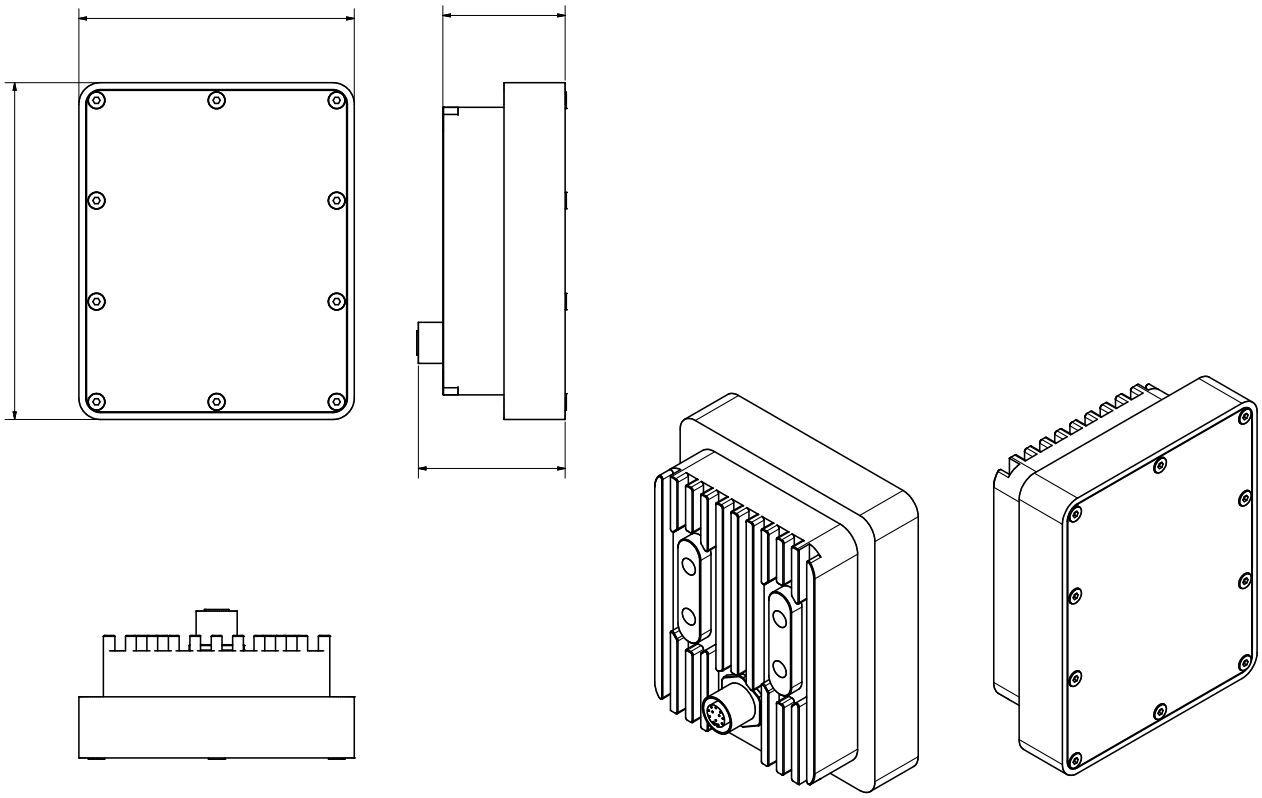

2023.