USER GUIDE

PUE HY10/P

Radwag

Distributed by AKRIBIS

User manual

ITKU-121-01-09-20-EN

HY10 Series

HY10 Multifunctional Scales

radwag.com
Scan the QR code to view additional scientific material that may be of interest to you.
There you will find more useful information in an accessible format!

AKRIBIS www.akribis.info contacto@akribis.info

SEPTEMBER 2020

PRECAUTIONS

Prior to installation, use or maintenance activities, carefully read this user manual. Use the PUE HY10 Terminal only as intended.

	Prior to the first use, carefully read this user manual. Use the device only as intended.
	Place weighed loads in the centre of the weighing pan.
	Load the weighing pan with loads of gross weight which does not exceed the maximum capacity.
	Mind not to leave heavy loads on the weighing pan for longer periods of time.
	Do not operate the touch panel using sharp-edged tools (knife, screwdriver, etc.).
	Protect the terminal against considerable temperature variation, solar and UV radiation, substances causing chemical reactions.
	The terminal must not be operated in hazardous areas endangered with explosion of gases, and in dusty environments.
	In case of damage, immediately unplug the device from the mains.
	Scales to be decommissioned must be decommissioned in accordance with valid legal regulations.
	If the scale is to be operated in conditions that are difficult due to electrostatics (e.g. printing house, packing centre, etc.), you must connect it to the earth wire. To enable this, the device features functional earthing terminal, marked with ⏚ symbol.

Contents

1. INTENDED USE 5
2. WARRANTY CONDITIONS 5
3. MAINTENANCE 6
3.1. Cleaning Stainless Steel Components 6
3.2. Cleaning ABS Components 6
3.3. Cleaning Platform Scales for Meat Industry 6
4. SERVICE AND REPAIR 8
5. RECYCLING 8
6. MECHANICAL DESIGN 9
6.1. 1-Load-Cell Scales 9
6.2. Multiple Load Cell Scales 9
6.3. Scales with Load-Cell Modules 10
6.4. Dimensions 11
6.5. Connectors 11
6.6. Pins Assignment 12
6.7. Inputs / Outputs 12
6.7.1. Technical Specifications 13
6.7.2. I/O Schematic Diagrams 13
6.8. Operation Panel 14
7. INSTALLATION 15
7.1. Unpacking and Installation 15
7.1.1. 1-Load-Cell Multifunctional Scales 15
7.1.2. Platform Scales: HY10.4.xx.C, HY10.4.xx.H, HY10.4.xx.H/Z Series 15
7.1.3. Ramp Scales: HY10.4N Series 15
7.1.4. Track Scales: HY10.2K Series 16
7.2. Levelling: 1-Load-Cell Platform Scales 17
7.3. Levelling: 4-Load-Cell Platform Scales 17
7.4. Start-Up 17
8. HOME SCREEN 18
8.1. Top Bar 18
8.2. Workspace 19
9. OPERATING THE MENU 19
9.1. Operation Panel 19
9.2. Return to Weighing 20
10. WEIGHING 20
10.1. Operation conditions for 1-load-cell-scales 20
10.2. Operation conditions for special scales 21
11. DIAGRAMS OF CONNECTION CABLES 23
12. TECHNICAL SPECIFICATIONS 25
13. ERROR MESSAGES 25

1. INTENDED USE

The scales are a response to growing market demands for an instrument offering simplicity of operation and weighing process automated to the maximum. Due to use of a multifunctional PUE HY10 terminal, the scales are a perfect solution for numerous industry applications. The PUE HY10 is equipped with a stainless steel housing of IP 68/69 ingress protection. It can be operated in places where there is high humidity and wide temperature range: -10°C - +40°C. Colour 10.1" capacitive screen with touch panel enables intuitive operation, making use of keyboard unnecessary.

Standard HY10 terminal is equipped with RS232, 2 USB, 4In/Out connectors and Ethernet port. It can connect up to 6 weighing platforms (2 x internal weighing module + 4 x external weighing module). It cooperates with barcode scanners, receipt printers, label printers, RFID readers and PC accessories (mouse, keyboard, USB flash drive).

2. WARRANTY CONDITIONS

A. RADWAG feels obliged to repair or exchange all elements that appear to be faulty by production or by construction.
B. Defining defects of unclear origin and means of their elimination can only be realized with assistance of the manufacturer and user representatives.
C. RADWAG does not bear any responsibility for damage or losses resulting from unauthorized or inadequate performing of production or service processes.
D. The warranty does not cover:
   - mechanical damage caused by product exploitation other than intended, damage of thermal and chemical origin, damage caused by lightning, overvoltage in the power grid or other random event,
   - inappropriate cleaning habits.
E. Loss of warranty takes place if:
   - a repair is carried out outside RADWAG authorized service point,
   - service claims intrusion into mechanical or electronic construction by unauthorized people,
   - other than original version of the operating system is installed,
   - the scale does not bear security seal stickers.
F. For detailed warranty conditions read the service card.
G. Contact with the central authorized service: +48 (48) 386 63 30.

3. MAINTENANCE

In order to ensure safety in the course of cleaning, it is necessary to disconnect the device from the mains. With this condition met, uninstall the weighing pan and other detachable components.

⚠	***Cleaning of the weighing pan while still installed may cause damage of the measuring system.***

3.1. Cleaning Stainless Steel Components

Avoid using cleansers containing any corrosive chemicals, e.g. bleach (with chlorine). Do not use cleansers containing abrasive substances. Always remove the dirt using microfiber cloth to avoid damage of protective coating. Daily cleaning routine (removal of small stains):

1. Remove the dirt using cloth dipped in warm water.
2. For best results, add a little bit of dishwashing detergent.

3.2. Cleaning ABS Components

To clean dry surfaces and avoid smudging, use clean non-colouring cloths made of cellulose or cotton. You can use a solution of water and detergent (soap, dishwashing detergent, glass cleaner). Gently rub the dirty surface and let it dry. Repeat the cleaning process if necessary.

In the case of hard to remove contamination, e.g. residues of adhesive, rubber, resin, polyurethane foam etc., you can use special cleaning agents based on a mixture of aliphatic hydrocarbons that do not dissolve plastics. Before using the cleanser, for all surfaces we recommend carrying out tests. Do not use cleansers containing abrasive substances.

3.3. Cleaning Platform Scales for Meat Industry

Platforms of meat industry scales are made of stainless steel (0H18N9 by PN, 1.4301 by EN, 304 by AISI) and silicone components.

Exceptions are zink-plated track scales made of galvanized steel and powder-coated livestock scales with an aluminium cover for the weighing pan.

⚠	***Cleaning and disinfecting agents must be properly selected with regard to the scale.***

In case of livestock scales, for commercial purposes it is necessary to use only stainless steel solutions.

These are much more resistant to long-lasting harsh conditions typical for slaughterhouses and livestock purchase sites. Powder-coated livestock scales can be used for rare small volume production, they must be stored clean in dry storage area and can be washed using water with detergent. Do not use any agents or cleansers that are not intended to come into contact with skin (i.e. requiring use of protecting gloves).

In case of track scales it is forbidden to use chemicals containing penetrating substances. Grease and impurities accumulating in places where the scale track touches the line track must be cleaned off periodically.

Weighing terminals of all scales feature stainless steel housing, polyester overlay and polyamide glands. Platforms of both livestock and ramp scales, their load-bearing structures and weighing tracks can be water-jet cleaned, the water temperature must be up to +80°C, respective cleanser needs to be added. When it comes to terminals, it is forbidden to apply water-jet cleaning method, use of hot water is not allowed. It is recommended to cover the terminals for the time of pressure washing of the surroundings.

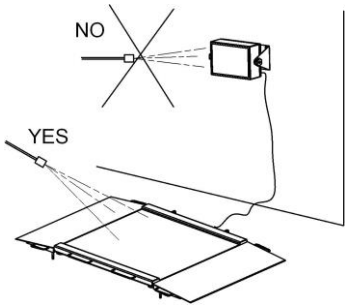

While cleaning platforms and terminals of waterproof platform scales use neither intense water jet nor hot water, this is to avoid damage of silicone bellow of platform sensor cover, terminal's operation panel or glands. Platforms of platform scales can be water-jet cleaned when uninstalled, they can also be cleaned by immersion into water.

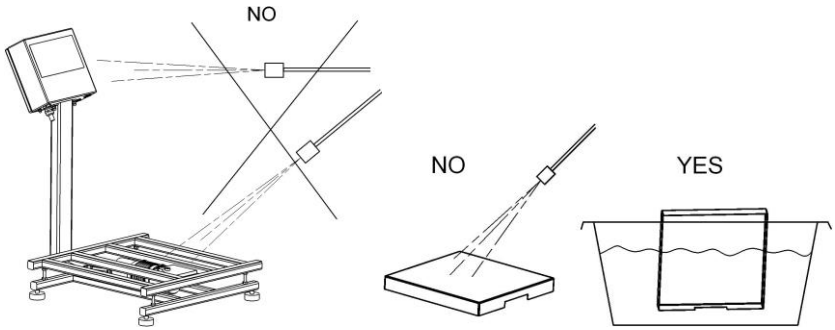

	Ramp scales		Livestock scales		Track scales		Waterproof platform scales		
	Platform with ramps	Weighing terminal	Platform with cage	Weighing terminal	Load-bearing structure with a load cell	Weighing terminal	Platform	Weighing terminal	Uninstalled pan
Water with detergents	Yes	Yes	Yes	Yes	Yes	Yes	Yes	Yes	Yes
Intense water jet	Yes	No	Yes	No	Yes	No	No	No	Yes
Hot water, 80°C max	Yes	No	Yes	No	Yes	No	No	No	Yes

4. SERVICE AND REPAIR

⚠	***In case of any sign of damage, it is necessary to disconnect the device form the mains immediately. The damaged component must be replaced or repaired by RADWAG service directly.***

In case of any problems with correct operation of the scale, contact the closest manufacturer's service point. In case of defects, deliver the faulty product to the manufacturer's service point. If the product cannot be delivered to the manufacturer's service point, call the service and report the defect. Repair scope and method will be set up.

⚠	***The user is NOT ALLOWED to carry out any kind of repair of the device himself/herself. Any attempt of scale modification, repair etc., by unauthorized persons, will result with loss of validity of manufacturer-issued certificates, declarations and warranty.***

5. RECYCLING

HY10 scales must be recycled, they are not to be treated as a regular household waste. Scales to be decommissioned must be decommissioned in accordance with valid legal regulations.

6. MECHANICAL DESIGN

6.1. 1-Load-Cell Scales

1-load-cell HY10 scale is intended to carry out fast and precise mass measurement of up to 300 kg loads. Its characteristic feature is a platform with one load cell only. The platform is equipped with a stainless steel weighing pan. Depending on a scale model, the cross and base are made of either stainless steel or powder-coated steel.

1-load-cell scale design, the main components

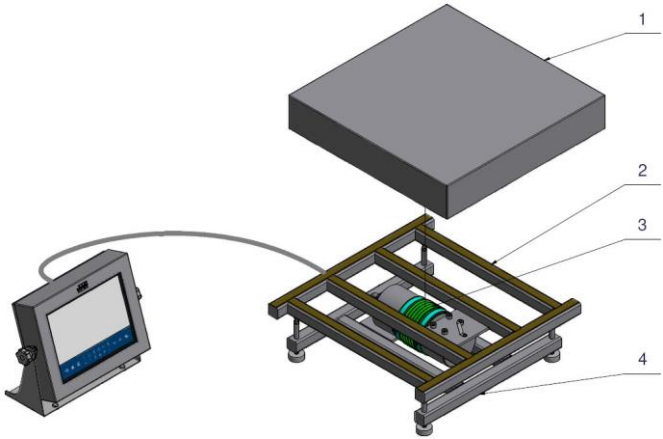

1-load-cell scale design, the main components:
1 - weighing pan, 2 - cross, 3 - load cell, 4 - base.

6.2. Multiple Load Cell Scales

Multiple load cell HY10 scale is intended to carry out fast and precise mass measurement of large loads. Its characteristic feature is a platform equipped with numerous load cells, usually four. The platform, depending on a scale model, is made of stainless steel or powder-coated steel, it features customized mechanical design suiting particular customer's requirements (pallet, beam, platform scales).

Multiple load cell scale design, the main components

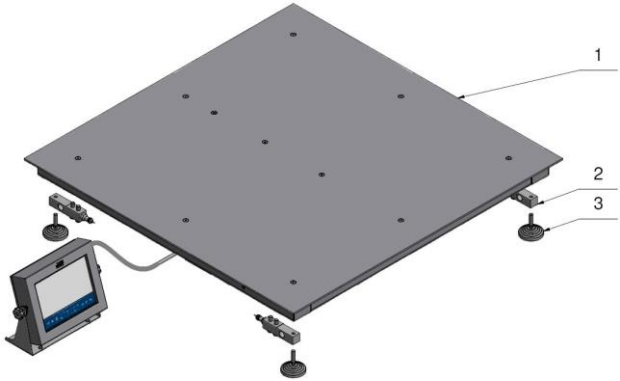

Multiple load cell scale design, the main components:
1 - weighing pan, 2 - load cells, 3 - feet.

6.3. Scales with Load-Cell Modules

HY10 scale with load cell modules is intended to carry out mass measurement of silos. The modules are built into construction of ground-fixed silo's support. In most cases, the scale design includes 3-4 load cell modules. The modules, depending on the model, are made of stainless or galvanized steel.

Scale design, the main components

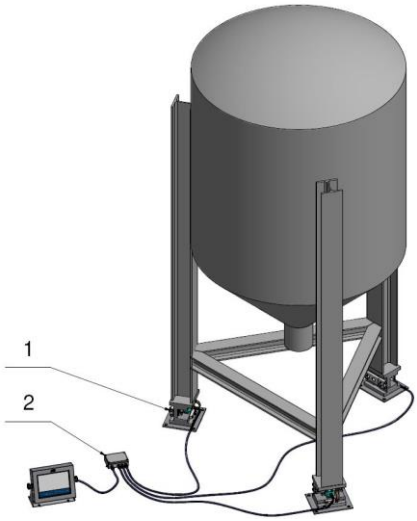

Scale design, the main components:
1 - module, 2 - junction box.

6.4. Dimensions

For overall dimensions read product card of a respective scale, the product cards are to be found on RADWAG website http://www.radwag.com/.

6.5. Connectors

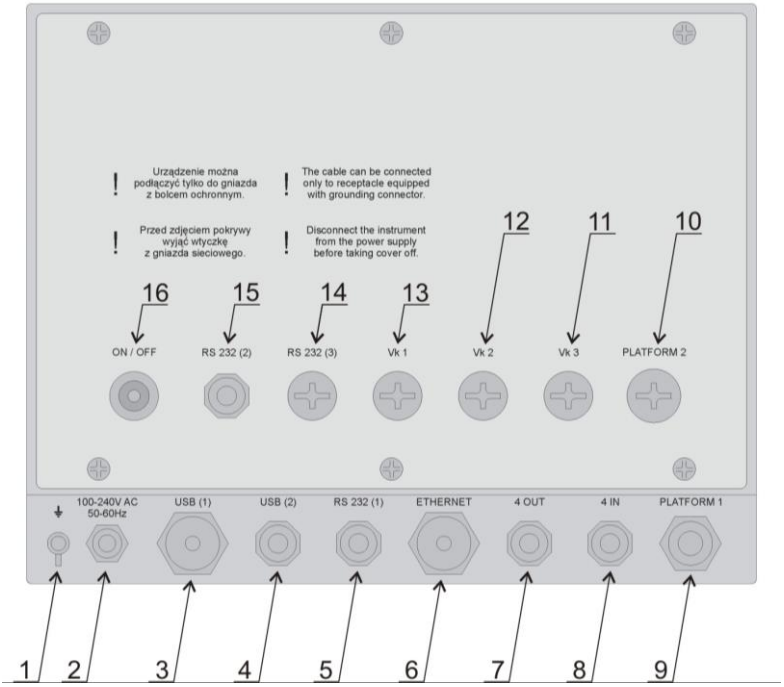

PUE HY10 terminal, connectors

1	Grounding terminal.
2	Power cord cable gland.
3	USB A connector.
4	USB M12 4P connector.
5	RS232(1) M12 8P connector.
6	Ethernet RJ45 connector.
7	4OUT M12 8P connector.
8	4IN M12 8P connector.
9	Platform 1 cable gland.
10	Platform 2 cable gland.
11	Spot intended for cable gland / additional equipment connector (Vk3, 12IN, PROFIBUS IN) – mounted depending on terminal type, by default plugged.

12	Spot intended for cable gland / additional equipment connector (Vk2, 12OUT, PROFIBUS OUT) – mounted depending on terminal type, by default plugged.
13	Spot intended for cable gland / additional equipment connector (Vk1, RS485, Analog OUT) – mounted depending on terminal type, by default plugged.
14	RS232 (3) M12 8P connector, optional.
15	RS232 (2) connector.
16	Power supply switch.

6.6. Pins Assignment

RS232	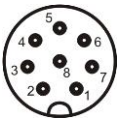	Pin1 – NC Pin2 – RxD Pin3 – TxD Pin4 – NC Pin5 – GND Pin6 - +5VDC Pin7 – GNDZ Pin8 – 24VDC
PROFIBUS IN (male)		Pin1 – NC Pin2 – A Pin3 – NC Pin4 – B Pin5 – NC
PROFIBUS OUT (female)		Pin1 - +5V Pin2 – A Pin3 – GND Pin4 – B Pin5 – NC
USB	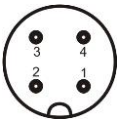	Pin1 – Vcc Pin2 – D- Pin3 – D+ Pin4 – GND

6.7. Inputs / Outputs

Standard HY10 terminal is equipped with 4 optoisolated inputs and 4 semiconductor outputs (solid-state relays). The signals are fed through M12 8P connectors.

4OUTPUTS	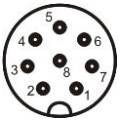	Pin1 – OUT1 Pin2 – OUT2 Pin3 – OUT3 Pin4 – OUT4 Pin5 – COM Pin6 – 24VDC Pin7 – GND Pin8 – NC

4INPUTS	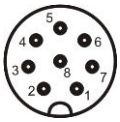	Pin1 – IN1 Pin2 – IN2 Pin3 – IN3 Pin4 – IN4 Pin5 – COM Pin6 – 24VDC Pin7 – GND Pin8 – NC

6.7.1. Technical Specifications

Output parameters	
Output quantity	4
Output type	Solid-state relay
Cable cross-section	0.14 - 0.5 mm^2
Maximum output current	0.5 A DC
Maximum output voltage	30 VDC, AC

Input parameters	
Input quantity	4
Input type	Optoisolated
Cable cross-section	0.14 - 0.5 mm^2
Input voltage range	5 - 24 VDC

6.7.2. I/O Schematic Diagrams

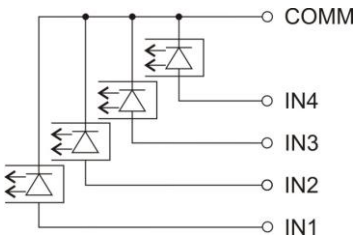	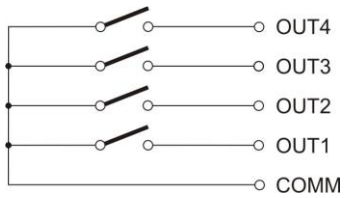
4 inputs	*4 outputs*

6.8. Operation Panel

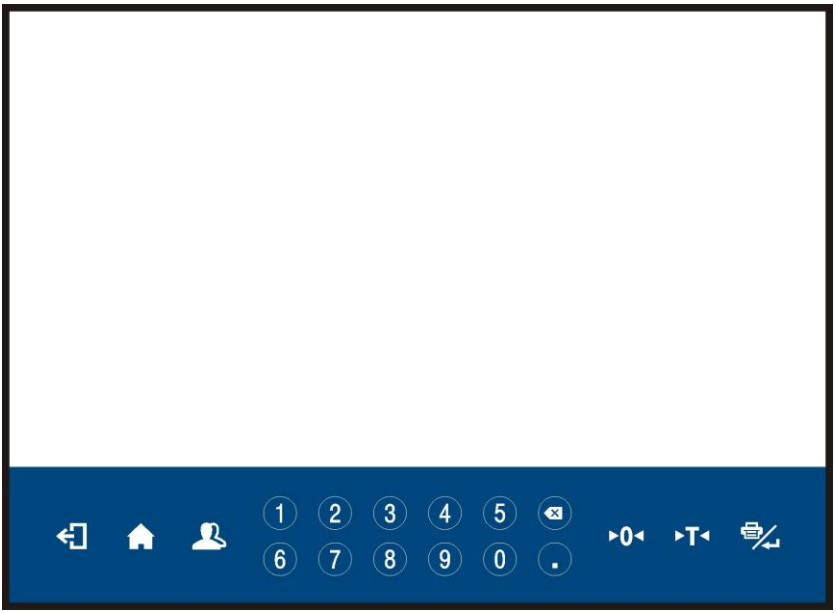

Keys

	Press to go back
	Press to enter the menu. Press to go to the home screen.
	Press to log in.
0	Press to zero the scale.
T	Press to tare the scale.
	Press to send the weighing result to a printer or a computer.
	Press to delete the last character.
.	Dot character.
1 … 0	Numeric keys.

7. INSTALLATION

7.1. Unpacking and Installation

⚠	***Mind not to damage cable connecting the terminal and a weighing platform.***

7.1.1. 1-Load-Cell Multifunctional Scales

- Take the device out of the packaging.
- Place the device on a flat and even surface. Keep it away from any sources of heat.
- Remove transport locks and install the weighing pan:

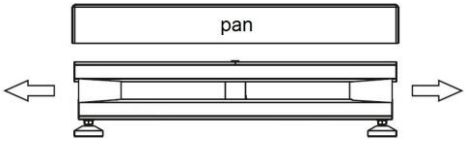

7.1.2. Platform Scales: HY10.4.xx.C, HY10.4.xx.H, HY10.4.xx.H/Z Series

- Take the device out of the packaging (pallet).
- Place the device on a flat and even surface. Keep it away from any sources of heat.
- Remove transport locks (if installed):

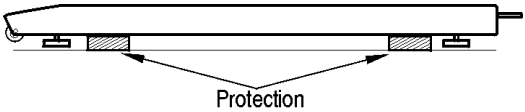

- Fix the feet (if not installed).

7.1.3. Ramp Scales: HY10.4N Series

- Take the device out of the packaging (pallet).
- Prior to installation, mount a steel bracket (2) onto a foot base (1), do it using an expanding ring (3), next screw the foot base (1) onto a foot pin (4).

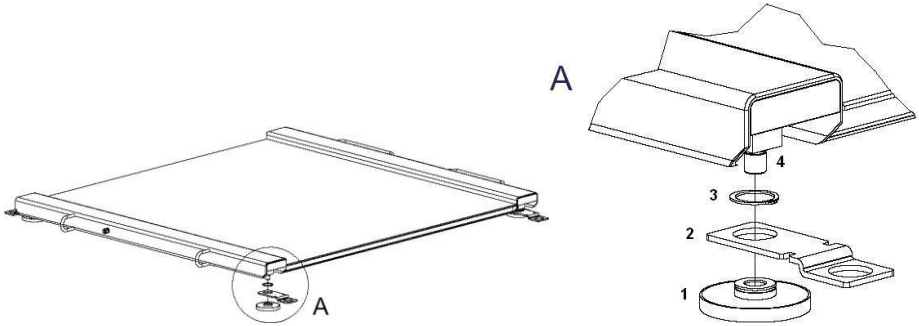

- Place the scale on a flat and even surface, install ramps onto the steel brackets.
- Remove ramps, looking through bracket holes, mark spots where openings for anchor bolts are to be made.
- Drill openings, mount steel brackets to the ground.

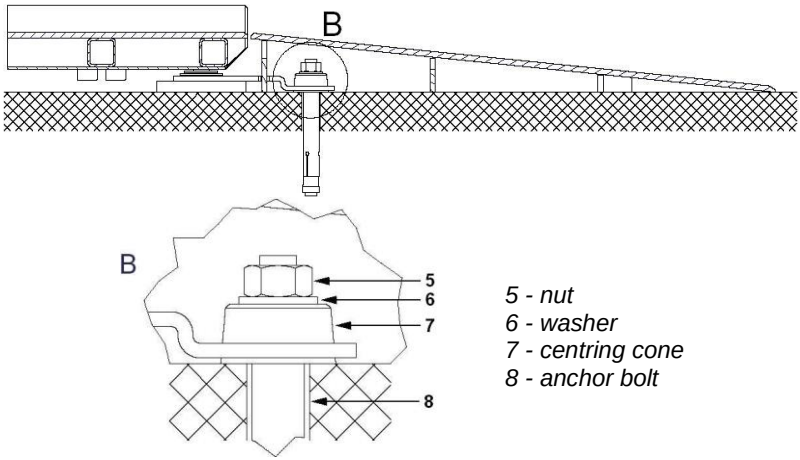

7.1.4. Track Scales: HY10.2K Series

Track scale is comprised of load-bearing structure and load cells (measuring components). The scale is installed on a rail of the load-bearing structure of the suspended track, the load cell is installed in a particular section of the track.

⚠	***The scale must be installed by an authorized RADWAG service exclusively, otherwise the warranty gets null and void. During scale installation attention must be paid to stresses and the weighing system, i.e. the weighing system must lack the stresses.***

7.2. Levelling: 1-Load-Cell Platform Scales

It is necessary to level the scale, do it by turning its feet. Keep turning the feet until the air bubble takes central position.

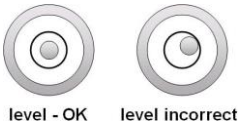

7.3. Levelling: 4-Load-Cell Platform Scales

To level the platform use the levelling feet and the level terminal. Each foot can be turned left and right, turning causes tilt.
Adjustment span of the scale level is narrow therefore the correct level is obtained using steel washers which are to be put under the feet.

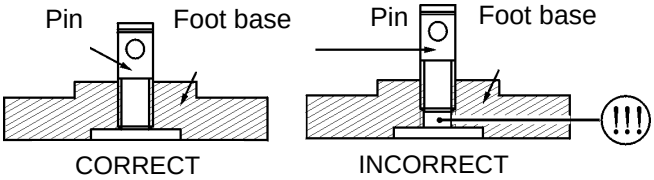

Keep turning the feet until the air bubble takes central position.

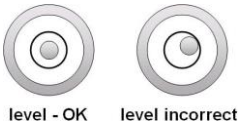

7.4. Start-Up

- Turn the power on, do it by pressing **ON/OFF** switch located at the back of the terminal housing. Operating system loading begins.
- Upon completed start-up, the home screen is displayed automatically.

8. HOME SCREEN

The home screen can be divided into 2 sections: a top bar, a workspace.

Home screen layout:

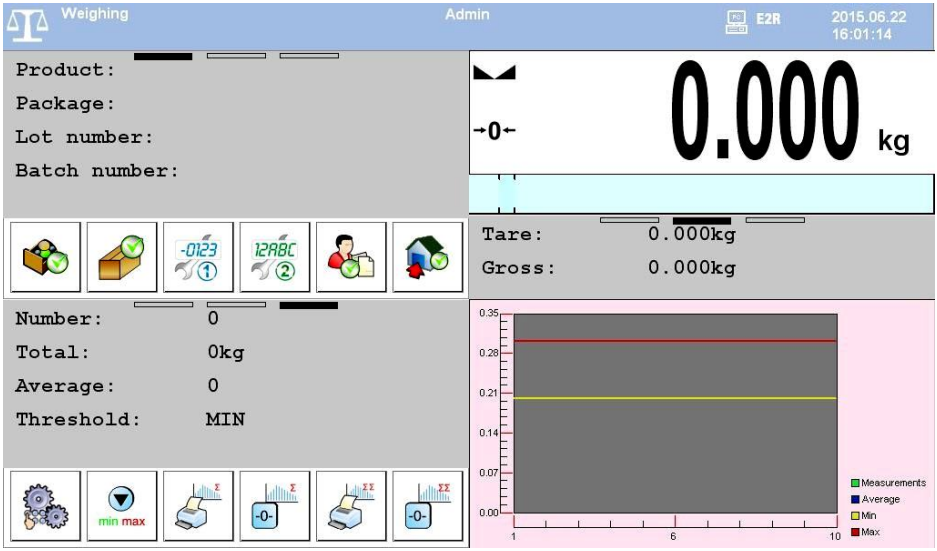

⚠	***Detailed instruction on how to configure the home screen is to be found in „PUE HY10 Terminal Software Manual".***

8.1. Top Bar

The top bar displays the following information:

Weighing	Working mode name and symbol.
Log In	Login entry.
PC	Symbol informing that communication with a PC is on.
E2R	Symbol informing that communication with the E2R SYSTEM is on.
PUE HY 10	Weighing device name.
2012.06.06 06:06:06	Date and time.

8.2. Workspace

The workspace is placed under the top bar, it features 4 screens, programmable for each working mode. You can customize the workspace freely.

9. OPERATING THE MENU

Due to a colour display and a touch panel, operation of the HY10 terminal menu is intuitive and simple.

9.1. Operation Panel

	Press to go to the menu. Press to go to the home screen directly.
	Press to go to the home screen directly.
	Press to go back.
	Press to go back.
	Press to scroll the menu up.
	Press to scroll the menu down.
	Press to scroll the menu up-down fast.
	Press to confirm modifications.
	Press to exit, the parameter remains unmodified.
	Press to add a database record.
	Press to disable the selected record. User logout.
	Press to search a particular database record by date.
	Press to search a particular database record by name.
	Press to search a particular database record by code.
	Press to print a database record.
	Press to export control and average tare reports for PGC mode.

	Press to clear edit box content.
	Press to enable/disable an on-screen keyboard.
	Press to read printout template saved to *.lb file (the button becomes active upon USB flash drive connection).
	Press to save the template to *.lb file (the button becomes active upon USB flash drive connection).
	Press to select printout template variables out of the list.

9.2. Return to Weighing

Introduced modifications are automatically recorded upon return to the home screen. To return to the home screen:

- press key repeatedly, keep pressing the key until you see the home screen,
- press either button or field, both located in the top bar, the home screen is displayed immediately.

10. WEIGHING

Load the weighing pan. Read the result when stability marker is displayed.

10.1. Operation conditions for 1-load-cell-scales

To assure long-term operation and correct mass measurements, follow the rules presented below:

Load the weighing pan steadily, avoid applying mechanical shocks.	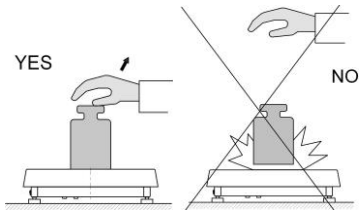
Place the loads centrally on the weighing pan (eccentricity errors are specified by EN 45501 standard, point 3.6.2).	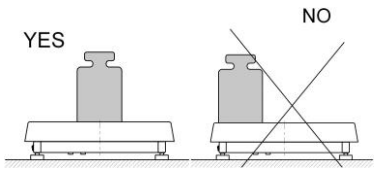

In case of eccentric loading make sure that: a) the weight of loads placed close to one of the pan edges does not exceed ½ of the max capacity, b) the weight of loads placed in the pan corner does not exceed 1/3 of the max capacity.	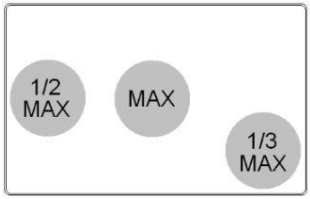
Do not apply concentrated force (total load in one point).	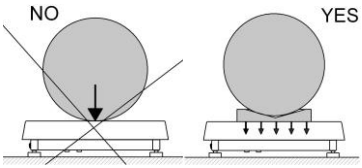
Avoid side loading, in particular side shocks.	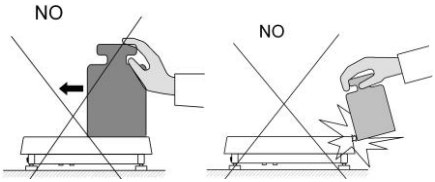

10.2. Operation conditions for special scales

It is forbidden to apply load other than intended for a particular scale:

- beam scales; self-supporting, rigid load or load placed in rigid load-transferring packaging:

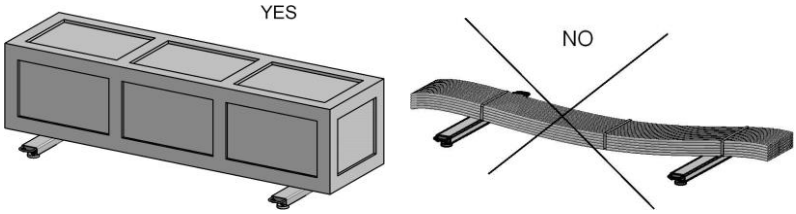

- pallet scales (load placed on EUR-pallet using pallet truck); middle block of pallet placed on the scale must remain unsupported:

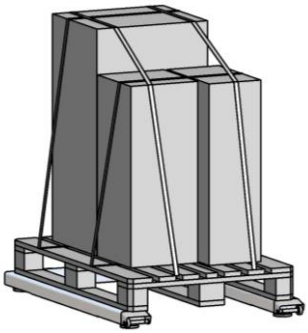

- ramp scales (trucks used in meat plants); it is necessary to select platform matching the span of truck casters, this is to make sure that in case of trucks of weight close to maximum capacity the load is transferred onto platform close to load-carrying sections (profiles):

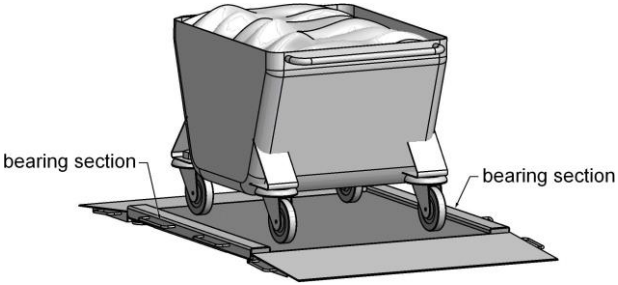

- track scales (product hanging on a hook) intended to slide:
  - hooks suiting a particular track and scale,
  - smooth slide down the track, no jerky moves, no swinging left or right,
  - evenly loaded track.

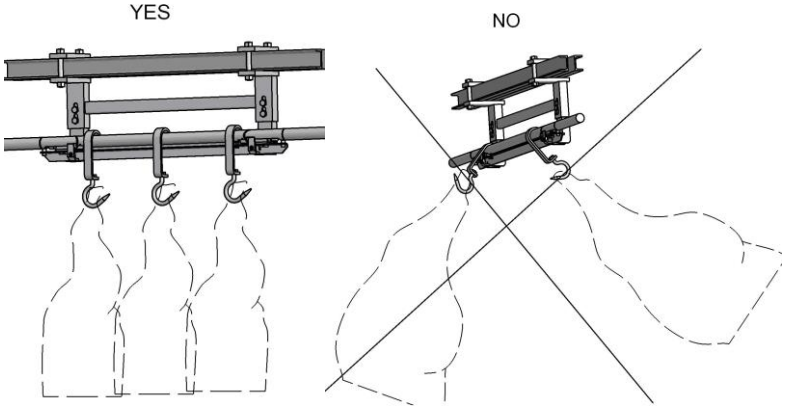

11. DIAGRAMS OF CONNECTION CABLES

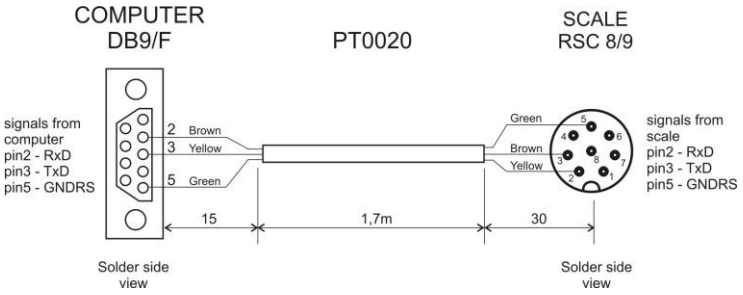

Terminal – computer cable

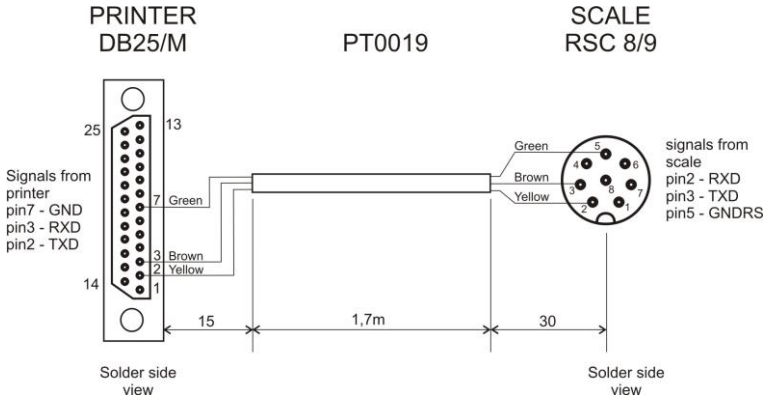

Terminal – printer cable (EPSON)

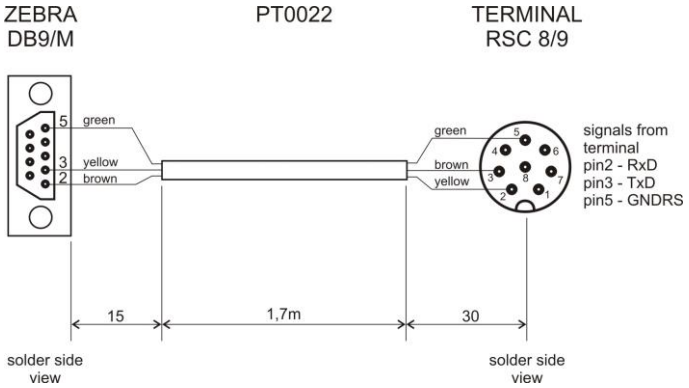

Terminal – printer cable (ZEBRA)

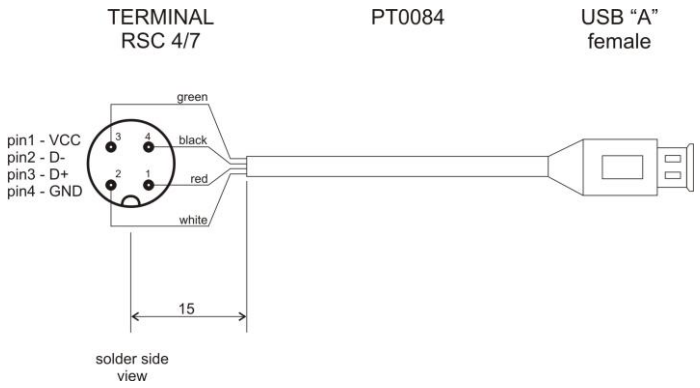

USB adapter cable

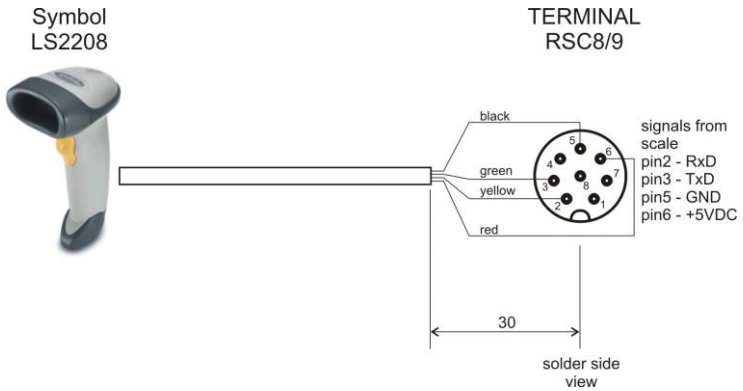

Terminal – barcode scanner cable (LS2208)

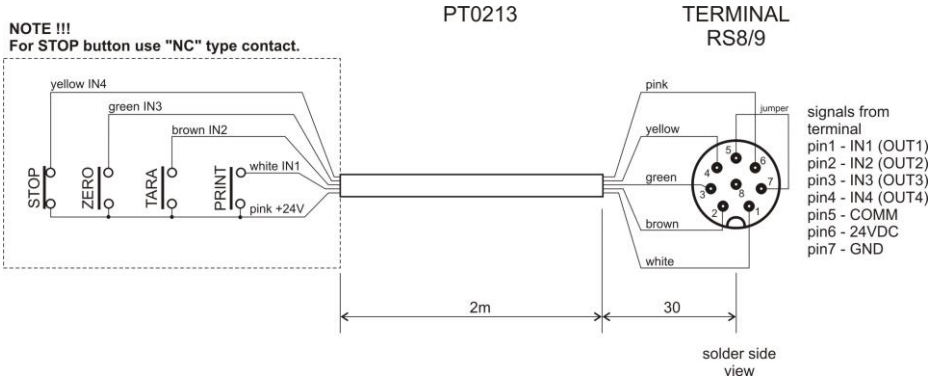

Terminal – PRINT, TARE, ZERO, STOP cable

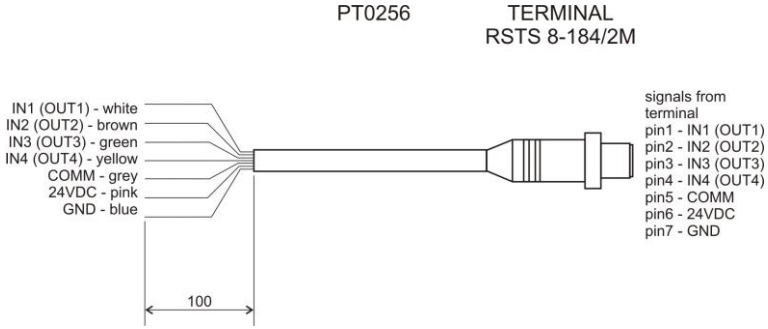

Terminal - IN/OUT cable

⚠	***„Scale-Ethernet" cable is a standard network cable terminated with RJ45 connectors on both ends.***

12. TECHNICAL SPECIFICATIONS

For technical specifications of respective scales go to RADWAG website http://www.radwag.com/.
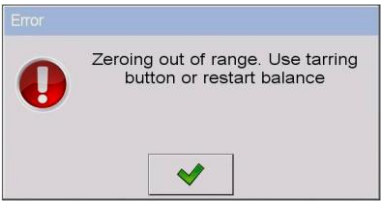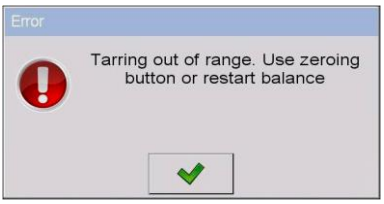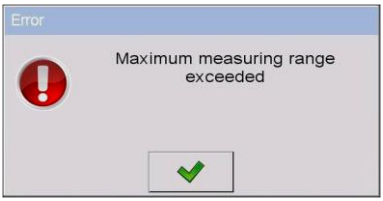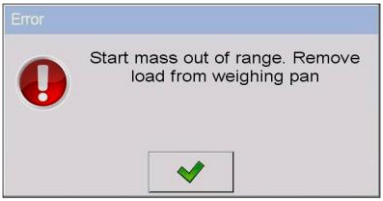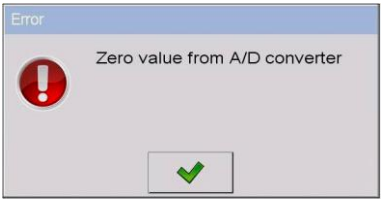
13. ERROR MESSAGES