DATASHEET

PUE H315

Radwag

Distributed by AKRIBIS

radwag.com

PUE H315 Weighing Terminal

WX-008-0191

More information on the website
radwag.com/en/info,w1,PES

The drawings, photos and graphics used are for illustrative purposes only.

Functions

- Plus/Minus Control
- Percent Weighing
- Totalizing
- Parts counting
- Internal battery
- Peak hold
- Newton unit measurement
- GLP Procedures
- Animal weighing
- ALIBI Memory

Datasheet

Metrological parameters	
OIML Class	III
Maximum quantity of divisions from converter	838 860 ×10
Maximum quantity of verification units	6000 e
Minimum volatge per verification unit	0.4 µV
Maximum voltage per verification unit	3.25 µV
Minimum load cell impedance	50 Ω
Maximum load cell impedance	1200 Ω

Metrological parameters	
Load cell excitation voltage	5V DC
Maximum increase of signal	39 mV
Connection of load cells	4 or 6 wires + shield
Physical parameters	
Display	4.3” LCD (backlit)
Device dimensions W x D x H	208×145×80 mm
Packaging dimensions W x D x H	300×250×130 mm
Net weight	1.9 kg
Gross weight	2.3 kg
Construction	
Protection class	IP 66 / 67 / 69
Keypad	microswitch
Housing	Stainless steel
Communication interface	
Communication interface	RS232, USB
Optional interfaces	RS232 or RS485 or 4IN/4OUT or Ethernet or analog output 4-20 mA
Electrical parameters	
Power supply	100 – 240 V AC 50/60 Hz
Optional power supply	internal rechargeable battery
Operation time on batteries	max 7h
Environmental conditions	
Operating temperature	-10 – +40 °C
Storage temperature	-10 – +50 °C
Relative humidity	10% – 80% RH no condensation
Number of buttons	5
Multiple range	1 or 2 ranges
Additional LCD display	WD-4/1 (option)

Compatible with (Additional Fee)

Waterproof stainless steel platforms
Mild steel powder coated weighing platforms
AP2-4 Current Loop Unit
RS 232 cables (scale - printer)
RS 232, RS 485 cables
Displays
Ethernet cables (scale - Ethernet)
Power Adapters
USB adatper
Receipt Printer
Additional modules
USB cable (scale - printer)
Stands, wall mounting kits and mounting brackets
RS 232 – USB Converter
RS 232 – RS 485 Converter

Software (Additional Fee)

- RAD Key [WX-010-0005]
- Scale Editor 2.1 [WX-010-0173]
- R-Lab [WX-010-0080]
- RADWAG Development Studio [WX-010-0104]
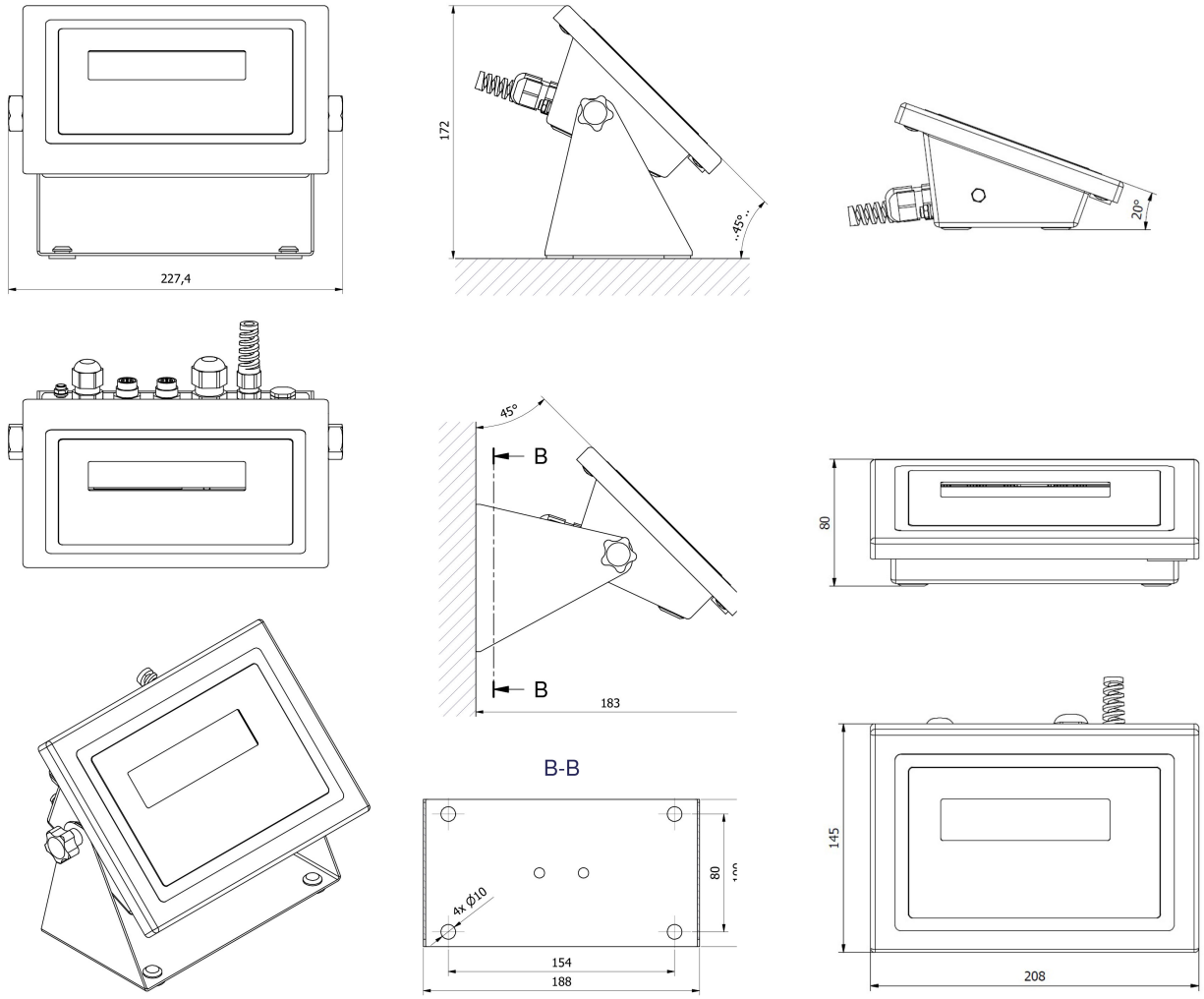
Device dimensions W x D x H