USER GUIDE

PUE C315

Radwag

Distributed by AKRIBIS

User manual

ITKU-102-08-09-21-EN

Weighing Terminal

PUE C315

radwag.com

Scan the QR code to view additional scientific material that may be of interest to you.
There you will find more useful information in an accessible format!

AKRIBIS www.akribis.info contacto@akribis.info

SEPTEMBER 2021

CONTENTS

1. INTENDED USE 5
2. WARRANTY CONDITIONS 5
3. MAINTENANCE ACTIVITIES 5
3.1. Cleaning ABS Components 5
3.2. Cleaning Stainless Steel Components 6
4. DESIGN 6
4.1. Dimensions 6
4.2. Connectors Arrangement 7
4.3. Pins Overview 7
4.4. Operation panel 7
4.5. Technical specifications 8
5. INDICATOR INSTALLATION 9
5.1. Unpacking and Installation 9
5.2. Start-Up 9
5.3. Battery Charge Status 9
5.4. Battery Charge Status Check 10
5.5. Worn out Batteries Replacement 10
6. OPERATING THE MENU 11
6.1. Return to the Weighing Mode 11
7. INSTALLER INSTRUCTION 12
7.1. Connecting 6-Wire Load Cell 12
7.2. Connecting 4-Wire Load Cell 13
7.3. Connecting Load Cell's Cable Shield 14
8. FACTORY SETUP 14
8.1. Access to Factory Setup 14
8.2. Factory Parameters List 15
8.3. Defining the device 17
8.4. Factory adjustment 18
8.4.1. External Adjustment Process 18
8.4.2. Start Mass Determination 18
8.4.3. Correction of Start Mass Expressed in Converter's Divisions 19
8.5. Linearity correction 19
8.5.1. Entering Linearity Correction Points 19
8.5.2. Corrections 20
8.5.3. Deleting Linearity 20
8.6. Gravitational coefficient 20
9. DIAGRAMS OF CONNECTION CABLES 21

PRECAUTIONS

Prior to installation, use or maintenance activities, carefully read this user manual and follow the provided guidelines.

	Prior to the first use, carefully read this user manual. Use the device only as intended.
	Protect the indicator against considerable temperature variation, solar and UV radiation, substances causing chemical reactions.
	The weighing device must not be operated in hazardous areas endangered with explosion of gases, and in dusty environments.
	In case of damage, immediately unplug the device from the mains.
	Scales to be decommissioned must be decommissioned in accordance with valid legal regulations.
	Do not let battery discharge in case of prolonged storage of the device in low temperature.
	Accumulators do not belong to regular household waste. The European legislation requires discharged accumulators to be collected and disposed separately from other communal waste with the aim of being recycled. Symbols on batteries identify harmful compounds: Pb = lead, Cd = cadmium, Hg = mercury. Dear user, you are obliged to dispose of the worn out batteries as regulated.

1. INTENDED USE

PUE C315 weighing indicator is a device intended to make industrial scales operating on the basis of load cells. The indicator is equipped with an internal battery, this allows its operation in places where there is no access to the mains. Clear weighing result presentation is ensured due to large display (LCD). Indicator's housing is made of plastic. Standard indicator features RS232 interface for cooperation with peripheral devices (printer, computer, etc.).

2. WARRANTY CONDITIONS

A. RADWAG feels obliged to repair or exchange all elements that appear to be faulty by production or by construction.
B. Defining defects of unclear origin and means of their elimination can only be realized with assistance of manufacturer and user representatives.
C. RADWAG does not bear any responsibility for damage or losses resulting from unauthorized or inadequate performing of production or service processes.
D. The warranty does not cover:
   - mechanical damage caused by product exploitation other than intended, damage of thermal and chemical origin, damage caused by lightning, overvoltage in the power network or other random event,
   - inappropriate cleaning habits.
E. Loss of warranty takes place if:
   - a repair is carried out outside RADWAG authorized service point,
   - service claims intrusion into mechanical or electronic construction by unauthorized people,
   - the device does not bear company protective stickers.
F. Warranty conditions outline the warranty period for rechargeable batteries attached to the device for 12 months.
G. For detailed warranty conditions read the warranty certificate.
H. Contact with the central authorized service: +48 (48) 386 63 30.

3. MAINTENANCE ACTIVITIES

In order to ensure safety in the course of cleaning, it is necessary to disconnect the device from the mains.

3.1. Cleaning ABS Components

To clean dry surfaces and avoid smudging, use clean non-colouring cloths made of cellulose or cotton. You can use a solution of water and detergent (soap, dishwashing detergent, glass cleaner).

Gently rub the cleaned surface and let it dry. Repeat cleaning process if needed.

In the case of hard to remove contamination, e.g. residues of adhesive, rubber, resin, polyurethane foam etc., you can use a special cleaning agents based on a mixture of aliphatic hydrocarbons that do not dissolve plastics. Before using the cleanser for all surfaces we recommend carrying out tests. Do not use cleansers containing abrasive substances.

3.2. Cleaning Stainless Steel Components

Avoid using cleansers containing any corrosive chemicals, e.g. bleach (including chlorine). Do not use cleansers containing abrasive substances. Always remove the dirt using microfiber cloth to avoid damage of protective coating.

In case of a daily maintenance:

1. Remove the dirt using cloth dipped in warm water.
2. For best results, add a little bit of dishwashing detergent.

4. DESIGN

4.1. Dimensions

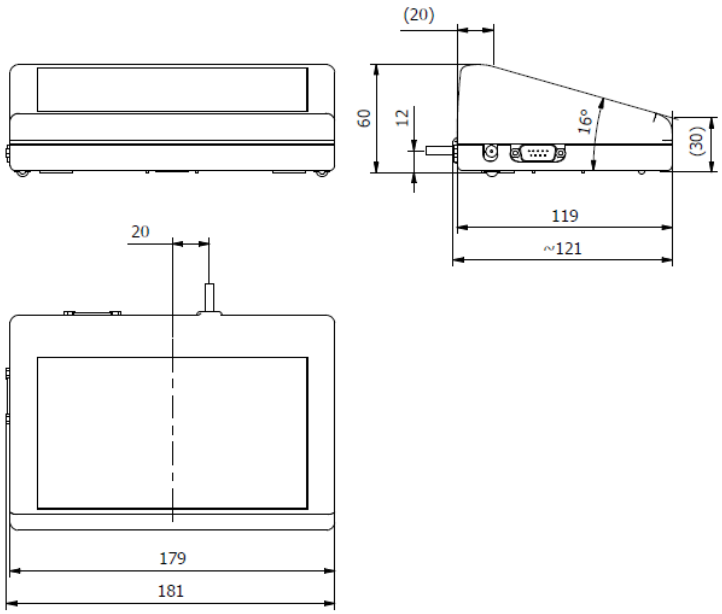

Dimensions of PUE C315

4.2. Connectors Arrangement

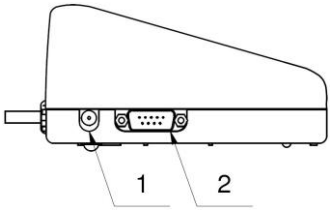	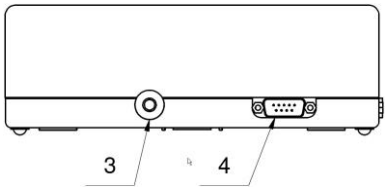
1 – power supply socket *2 – RS232 (1) connector*	*3 – weighing platform cable inlet* *4 – RS232 (2) connector **

***)** - *option.*

4.3. Pins Overview

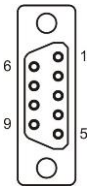	Pin2 – RxD Pin3 – TxD Pin4 – 5VDC Pin5 – GND	**RS232 (1) connector, DB9/M (male)**
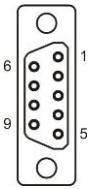	Pin2 – RxD Pin3 – TxD Pin4 – 5VDC Pin5 – GND	**RS232 (2) connector, DB9/M (male)**

4.4. Operation panel

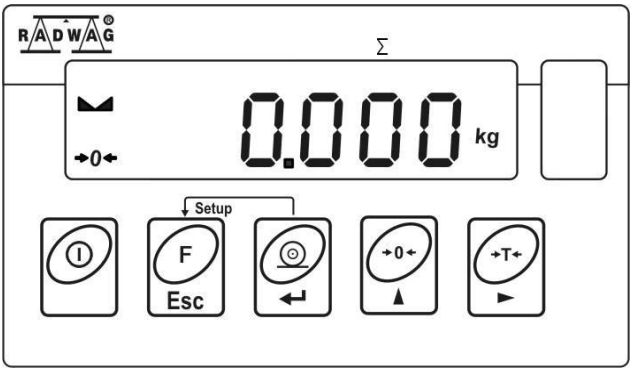

Keys:

	Press to switch the weighing device on/off – hold the key for about 1 second.
F Esc	Function key, press to change the working mode.
	Press to send the weighing result to a printer or computer.
→0←	Press to zero the scale.
→T←	Press to tare the scale.

!	***Upon pressing F Esc + keys combination, functions of given keys change. Detailed information concerning use of the above keys combination is to be found further down this manual.***

4.5. Technical specifications

Housing	Plastic
Ingress protection	IP43
Operating temperature	-10°C do +40°C
Display	LCD (backlit)
Power supply	100 ÷ 240 VAC 50 ÷ 60 Hz / 12-24 VDC
Battery power supply	6 x NiMH AA/R6 batteries
OIML	III
Verification unit [e] quantity	6000
Maximum input signal	39 mV
Minimum voltage per verification unit	0.4 uV
Minimum impedance of load cell	50
Maximum impedance of load cell	1200
Load cell power supply	5 V
Connection of load cells	4 or 6 wires + shield
Weighing platforms quantity	1
Multi range option	Yes
Standard interfaces	RS232 (1)
Optional interfaces	RS232 (2)

5. INDICATOR INSTALLATION

5.1. Unpacking and Installation

A. Take the indicator out of the packaging.
B. Connect the indicator and the platform and place the set on a flat and even surface. Keep it far away from any sources of heat.
C. To level the weighing instrument turn its feet. Keep turning the feet until the air bubble takes central position:

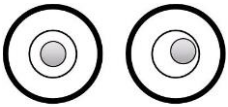

level - OK level incorrect

5.2. Start-Up

The weighing device can be connected to the mains only with a power supply that comes standard with the particular model. Nominal voltage of the power supply (specified on the power supply data plate) has to be compatible with the mains nominal voltage.

Procedure:

- Connect the power supply to the mains. Plug it to the power supply socket (back side of the scale housing).
- Press key. The key is also used to switch the scale on/off.
- Display test proceeds (all symbols are backlit for a moment), program name and number is displayed first, mass indication next.

5.3. Battery Charge Status

The scale of standard design is equipped with an internal battery. Battery state is signalled by pictogram, the pictogram is displayed in the top bar of the display.

pictogram display mode	**Meaning**
No pictogram	Battery charged. Regular scale operation.
Pictogram displayed continuously	Too low battery charge (the scale is about to shut down). Charge the battery immediately.
Blinking pictogram, blink frequency: ca. 1 s	Battery charge in progress. The device is connected to the power supply charging the battery.
Blinking pictogram, blink frequency: ca. 0.5 s	Battery error. Battery is damaged.

5.4. Battery Charge Status Check

- Press F Esc and +T+ ► keys combination.
- Depending on the battery state, a respective status is displayed on the screen for 2s:

80%	Battery power supply. Battery power given in %.
CHArGE	Battery charge in progress. The device is connected to the power supply charging the battery.
-Err5-	Battery error. Battery is damaged.

- Next, the home screen is displayed automatically.

5.5. Worn out Batteries Replacement

Open battery container lid. The lid is to be found in the housing base.	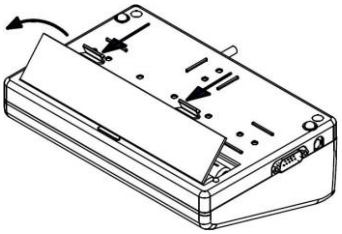
Take the worn out batteries out of the container, insert new accumulators, pay attention to +/- polarization.	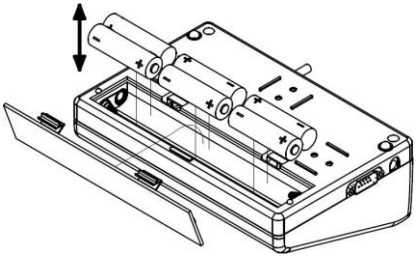
Close the lid.	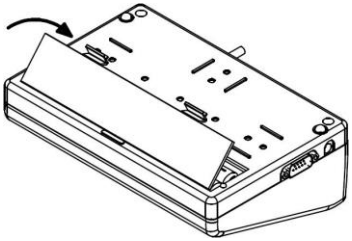

6. OPERATING THE MENU

In order to navigate the program menu use the operation panel.

F Esc + ◎ ↵	Press to enter the main menu.
→0← ▲ + →T← ►	Press to enter tare manually. Press to enter tare from tare database. Press to change value by 1 digit up. Press to scroll the menu up.
F Esc + →T← ►	Press to check battery/accumulator state.
F Esc + →0← ▲	Press to view date/time.
→0← ▲	Press to scroll the menu down. Press to change current parameter value.
→T← ►	Press to enter given submenu. Press to modify given parameter.
◎ ↵	Press to confirm modification.
F Esc	Press to exit, function remains unmodified. Press to move one menu level up.

6.1. Return to the Weighing Mode

Introduced menu modifications are automatically saved to scale memory upon return to the home screen. To return to the home screen press F Esc key repeatedly.

7. INSTALLER INSTRUCTION

The PUE C315 indicator serves as basis of load cell scales.

7.1. Connecting 6-Wire Load Cell

Connect 6-wire load cell to the main board following the diagram below:

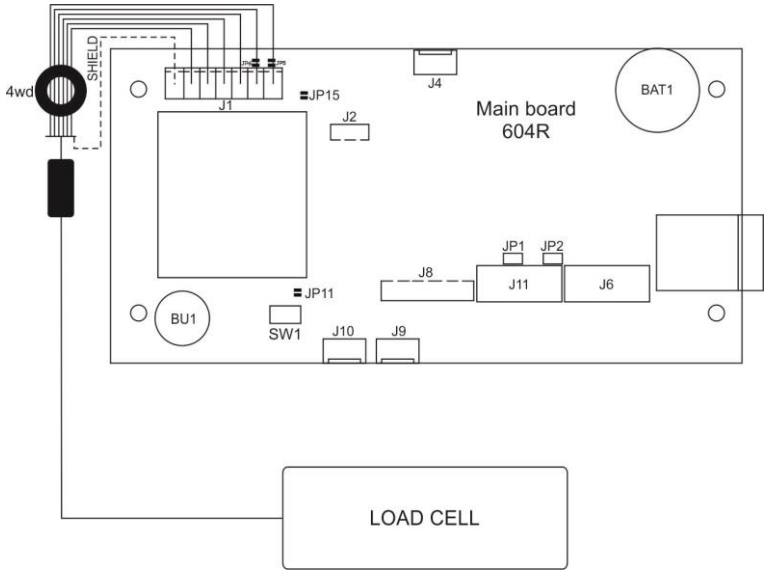

6-wire load cell connection

RADWAG BOARD SIGNALS	LOAD CELL SIGNALS	NOTES
E	SHIELD	refer to section 7.3
REF+	SENSE+	JP5 not soldered
REF-	SENSE-	JP6 not soldered
IN+	OUTPUT+	
IN-	OUTPUT-	
+5V	INPUT+	
AGND	INPUT-	

7.2. Connecting 4-Wire Load Cell

Connect 4-wire load cell to the main board following the diagram below:

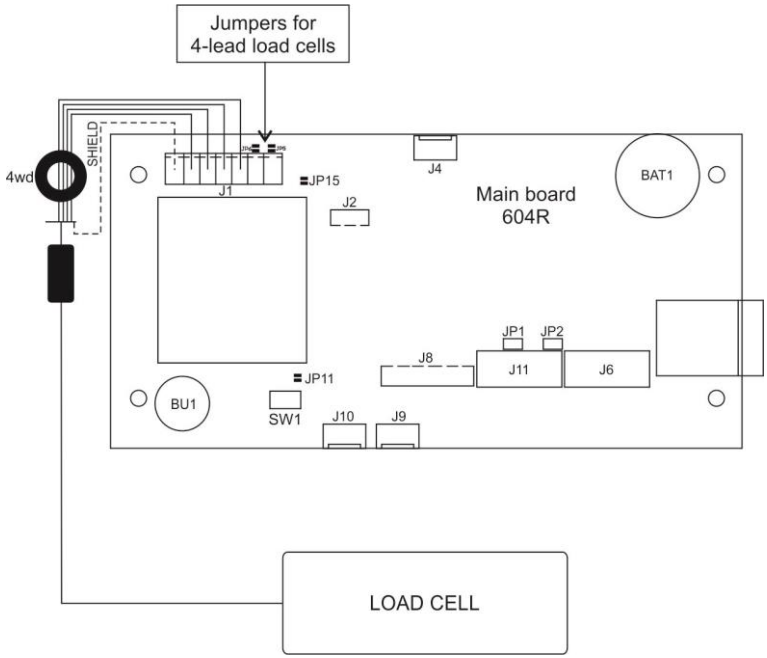

Connecting 4-wire load cell

RADWAG BOARD SIGNALS	LOAD CELL SIGNALS	NOTES
E	SHILED	refer to section 7.3
REF+	SENSE+	JP5 soldered
REF-	SENSE-	JP6 soldered
IN+	OUTPUT+	
IN-	OUTPUT-	
+5V	INPUT+	
AGND	INPUT-	

7.3. Connecting Load Cell's Cable Shield

	Load cell with galvanic connection of the signal cable shield.	Load cell without galvanic connection of the signal cable shield.
Balance with indicator in ABS housing connected with platform via load cell signal cable.	**Do NOT connect**	**E**
Balance compact design (balance with indicator in ABS housing on a post).	**Do NOT connect**	**E**

***E** – Solder pad on the main board and on additional A/D converter boards.*

8. FACTORY SETUP

To access and modify both factory settings and parameters that are made available for a user, run Factory Setup mode. Running Factory Setup mode enables the technician to define the balance.

8.1. Access to Factory Setup

- Switch the weighing device off, to do it press key.
- Press and hold SW1 switch located on the electronics board, while holding the SW1 switch, press key to run the weighing device.

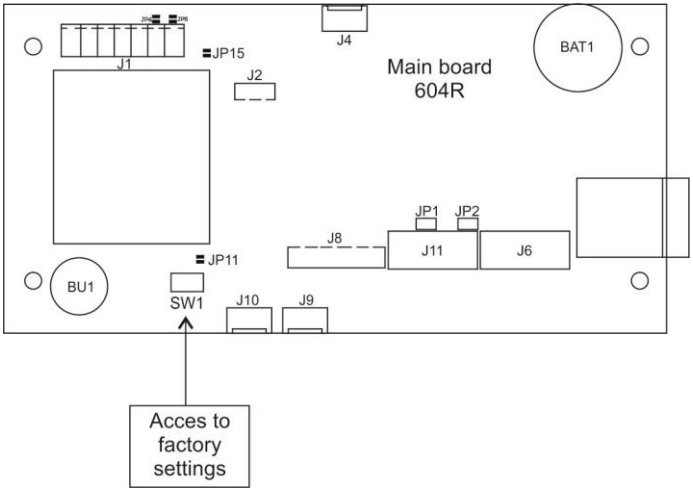

Factory Setup access switch

- Wait, the device switches on.
- Press F/Esc and ↵ keys combination, message **<P0.FAct>** is displayed.
- Press →T← key to go to factory parameters' submenu no. 1.

⚠	***After completed factory parameters setup, restart the weighing device.***

8.2. Factory Parameters List

No.			Name	Value	Description
P0.			**FAct**	**-**	**Factory parameters**
	0.1.		**Glob**	**-**	**Global parameters**
		0.1.1.	duu	-	Defining the weighing device.
		0.1.2.	FAc		Serial number.
		0.1.3.	tYP	1, 2, 4, 6, 7, 8, 9, 12	Weighing device type: **1** - WLC/A2; **2** - WLC/F, WLC/C2, **4** – WTC, **6** – Medical scale, **7** - Medical scale (BMI disabled), **8** – PUE C315; **9** – PUE H315; **12** – WLC/C/2.
		0.1.4.	Gcor	0.9 - 1.1	Gravity correction factor.
		0.1.7.	tSc	SLA, nInnH, no	Battery selection.
		0.1.8.	CSt	nonE, d, A, V, b, SP, SC, nt	Declaring the customer: **nonE** - none, **d** - KERN, **A** - ADEMI, **V** - VWR, **b** - BOECO, **SP** - Spectrum, **SC** – Schuller, **nt** – NEW TECH.
		0.1.9.	rtc	-	RTC synchronisation.
		0.1.A.	ntE	YES, no	US market metrological requirements activation.
		0.1.b.	UFA	YES, no	Wireless communication module activation.
	0.2.		**nnG**	**-**	**Metrology**
		0.2.1.	A/d	-	Converter's divisions.
		0.2.2.	Uni	g, kg, lb	Adjustment unit.
		0.2.3.	du1	0.0001, 0.0002, 0.0005, 0.001, 0.002, 0.005, 0.01, 0.02, 0.05, 0.1, 0.2, 0.5, 1, 2, 5, 10, 20, 50	Range 1 reading unit.
		0.2.4.	dE1	no, 0.001, 0.01, 0.1, 1, 2, 5	Range 1 verification unit; **no** - non-verified balance/scale.

		0.2.5.	du2	0.0001, 0.0002, 0.0005, 0.001, 0.002, 0.005, 0.01, 0.02, 0.05, 0.1, 0.2, 0.5, 1, 2, 5, 10, 20, 50	Range 2 reading unit.
		0.2.6.	dE2	no, 0.001, 0.01, 0.1, 1, 2, 5	Range 2 verification unit; **no** - non-verified balance/scale.
		0.2.7.	Ful	-	Maximum range + overload.
		0.2.8.	rn2	-	Range switching point.
		0.2.9.	uuE	-	External adjustment weight mass.
		0.2.A	uui	-	Internal adjustment weight mass. **„0”** - internal adjustment disabled.
		0.2.b.	Aur	PrF, 0.1d, 0.2d, 0.25d, 0.5d, 0.6d, 0.7d, 0.8d, 0.9d, 1d, 2d, 2.5d, 3d, 4d,5d,6d, 7d, 8d, 9d, 10d	Autozero range: **PrF** - value taken from program-implemented tables; **0.1d - 10d** - value entered directly by a user.
		0.2.c.	Aut	PrF, 0, 0.2s, 0.4s, 0.6s, 1s, 2s, 3s, 4s, 5s, 6s, 7s, 8s, 9s, 10s, 15s, 20s,	Autozero time: **PrF** - value taken from program-implemented tables; **0s - 20s** - value entered directly by a user.
		0.2.d.	Str	PrF, 0.1d, 0.2d, 0.25d, 0.5d, 0.6d, 0.7d, 0.8d, 0.9d, 1d, 2d, 2.5d, 3d, 4d,5d,6d, 7d, 8d, 9d, 10d	Stability range: **PrF** - value taken from program-implemented tables; **0.1d - 10d** - value entered directly by a user.
		0.2.E.	Stt	PrF, 0, 0.2s, 0.4s, 0.6s, 1s, 2s, 3s, 4s, 5s, 6s, 7s, 8s, 9s, 10s, 15s, 20s,	Stability time: **PrF** - value taken from program-implemented tables; **0s - 20s** - value entered directly by a user.
		0.2.F.	rAn	YES, no, 50%, dEF	Start mass control: **YES** – range: from -10% to +10% of start mass, **no** – off, **50%** – range: from -50% to +50% of start mass, **dEF** – range declared in 0.2.G. parameter.
		0.2.G.	rnt	10% - 90%	Start mass range in [%].
		0.2.H.	Ldn	no, YES	Digit marker for non-verified scales.
	0.3.		**CAL**	**-**	**Adjustment**
		0.3.1.	CLE	-	External adjustment process.
		0.3.2.	Std	-	Determination of start mass for external adjustment.
		0.3.3.	CLI	-	Internal adjustment process.
		0.3.4.	Stu	-	Start mass expressed in converter's divisions.
		0.3.5.	AdF	-	Adjustment factor.
		0.3.6.	CAC	0.1, 1, 2, 3, 4, 5, 6, 7, 8, 9, 10, 11, 12.	Setting time interval, in **[h]**, after which internal adjustment is triggered.
		0.3.7.	CAt	0.1, 0.2, 0.3, 0.4, 0.5, 0.6, 0.8, 1, 1.5, 2, 2.5, 3, 4, 5, 6, 8, 10	Setting temperature difference, in **[°C]**, for which internal adjustment is triggered.

		0.3.8.	CAS	-	Internal adjustment weight weighing procedure.
		0.3.9.	CAu	-	Internal weight relocation, up-down direction.
		0.3.A	tP	-	Display of current temperature, in **[°C]**.
	0.4.		**LinE**	**-**	**Linearity**
		0.4.1.	dSG	-	Entering linearity correction points.
		0.4.2.	dEL	-	Deleting linearity.
		0.4.3.	Cor	-	Entering correction values for linearity.
	0.5.		**Adnn**		**Additional modules activation**
		0.5.1.	UFA	YES, NO	Wireless communication module: **YES** - enabled, **NO** - disabled
	0.6.		**Boot**		**Bootloader**
	0.7.		**dFLt**	**-**	**Default settings.**

8.3. Defining the device

Defining the device at the production stage requires entering basic balance/scale parameters: serial number, weighing device type, weighing range.

Procedure:

- Enter factory setup **<P0.FAct>**.
- Go to **<0.1.Glob / 0.1.1.duu>** submenu, text **<Cont?>** is displayed.
- Press key, text **<nr FAc>** is displayed, next you see window for entering the serial number.
- Enter the serial number, do it using the operation panel.
- Press key to confirm, text **<type>** is displayed, next you see window for balance/scale type selection.
- Select balance/scale type, do it using operation panel (refer to factory parameters table, section 8.2 of this manual).
- Press key to confirm, weighing range window is displayed.
- Select appropriate weighing range, do it using the operation panel.
- Press key to confirm, **<0.1.1duu>** submenu is displayed.
- Exit to home screen, to do it press key repeatedly.

⚠	***While defining balance/scale type, additional parameters are set automatically. These are among many battery type, internal adjustment accessibility, additional modules and communication interfaces accessibility.***

8.4. Factory adjustment

8.4.1. External Adjustment Process

- Enter factory setup submenu: **<P0.FAct / 0.3.CAL>**.
- Enter **<0.3.1.CLE>** function, text **<UnLoAd>** is displayed.
- Unload the weighing pan.
- Press key, adjustment zero point gets determined.
- With adjustment zero point determined, first text **<LoAd>**, next mass of an adjustment weight that is to be loaded onto the weighing pan is displayed.
- Load the weighing pan with the required adjustment weight.
- Press key, adjustment starts.
- Upon adjustment completion, text **<UnLoAd>** is displayed.
- Unload the weighing pan, **<0.3.1.CLE>** submenu is displayed.
- Exit to home screen, to do it press key repeatedly.

8.4.2. Start Mass Determination

- Enter factory setup submenu: **<P0.FAct / 0.3.CAL>**.
- Enter **<0.3.2.Std>** function, text **<UnLoAd>** is displayed.
- Unload the weighing pan.
- Press key, start mass determination starts.
- Upon completed determination process, **<0.3.2.Std>** submenu is displayed.
- Exit to home screen, to do it press key repeatedly.

⚠	***If start mass determination or adjustment factor determination takes more than 360 seconds then <Err8> error is displayed and short sound signal is heard. In such case the balance requires readjustment/recalibration, perform it providing as stable ambient conditions as possible!***

8.4.3. Correction of Start Mass Expressed in Converter's Divisions

- Enter factory setup submenu: **<P0.FAct / 0.3.CAL>**.
- Enter **<0.3.4.Stu>** submenu, value of start mass expressed in converter's divisions is displayed.
- Correct the value, to do it use operation panel, next press key to confirm changes.
- Exit to home screen, to do it press F Esc key repeatedly.

8.5. Linearity correction

Prior linearity correction it is necessary to determine real balance characteristics. Correction mechanism allows to enter corrections in 20 points maximum.

8.5.1. Entering Linearity Correction Points

- Enter factory setup submenu: **<P0.FAct / 0.4.Line / 0.4.1.dSG>**, text **<Cont?>** is displayed.
- Press key to confirm. Text **<Pnt1>** is displayed (linearity connection point no. 1).
- Press key, window for entering mass value for linearity correction point no. 1 is displayed.
- Enter the given value, next press key to confirm, text **<Pnt2>** is displayed (linearity connection point no. 2).
- Press key, the program automatically suggests value for the next linearity correction point.
- Press key to confirm the suggested value, or enter a new value (do it using operation panel).
- Keep repeating this procedure until you enter value close to maximum capacity value.

!	***While attempting to enter correction point value greater than maximum capacity value, <Err Hi> error is signalled.***

- In order to finish entering linearity correction points press F Esc key, **<0.4.1.dSG>** submenu is displayed.

8.5.2. Corrections

It is possible to enter extra corrections for declared linearity correction points.

Procedure:

- Enter factory setup submenu: **<P.0.FAct / 0.4.Line / 0.4.3.Cor>**, value of linearity correction point no.1 is displayed.
- Press key, window for entering correction value for linearity correction point no. 1 is displayed.
- If there is a need to enter negative value, go to the first digit and press key.
- Press key to confirm, modified correction point value is displayed.
- Go to the next linearity correction point, to do it press key.
- Correcting the 2nd linearity correction point is analogous.
- In order to finish correcting linearity correction points press F Esc key, **<0.4.3.Cor>** submenu is displayed.

8.5.3. Deleting Linearity

- Enter factory setup submenu: **<P.0.FAct / 0.4.Line / 0.4.2.dEL>**, text **<Cont?>** is displayed.
- Press key for confirmation.
- Exit to home screen, to do it press F Esc key repeatedly.

8.6. Gravitational coefficient

The function of gravity correction compensates changes of gravity force being a result of different latitude. It allows to carry out correct balance/scale calibration away from the point of subsequent use. The gravity correction value must be entered with reference to tables prepared by „Radwag Balances and Scales” or calculated using the below formula:

$$Gcor = \frac{g_{uzyt.}}{g_{kal.}}$$

Correction value ranges between 0.90000 ÷ 1.99999.

⚠	***If the balance is calibrated in the place of use then the value of gravitational coefficient, <0.1.4.Gcr> parameter, must be 1.00000. If the weighing instrument is calibrated away from the place of use (longitudinal change) the value must be corrected.***

9. DIAGRAMS OF CONNECTION CABLES

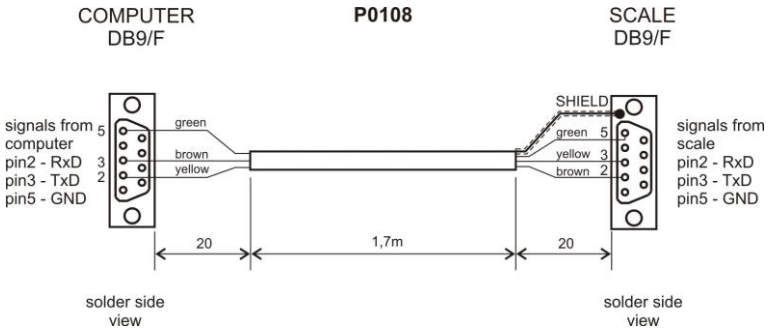

Scale – computer cable

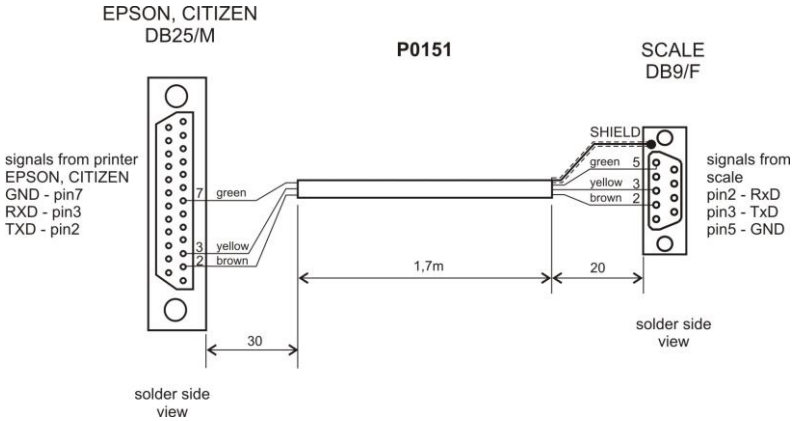

Scale - printer cable (EPSON)