DATASHEET

PUE 7.1.300.1.HRP

Radwag

Distributed by AKRIBIS

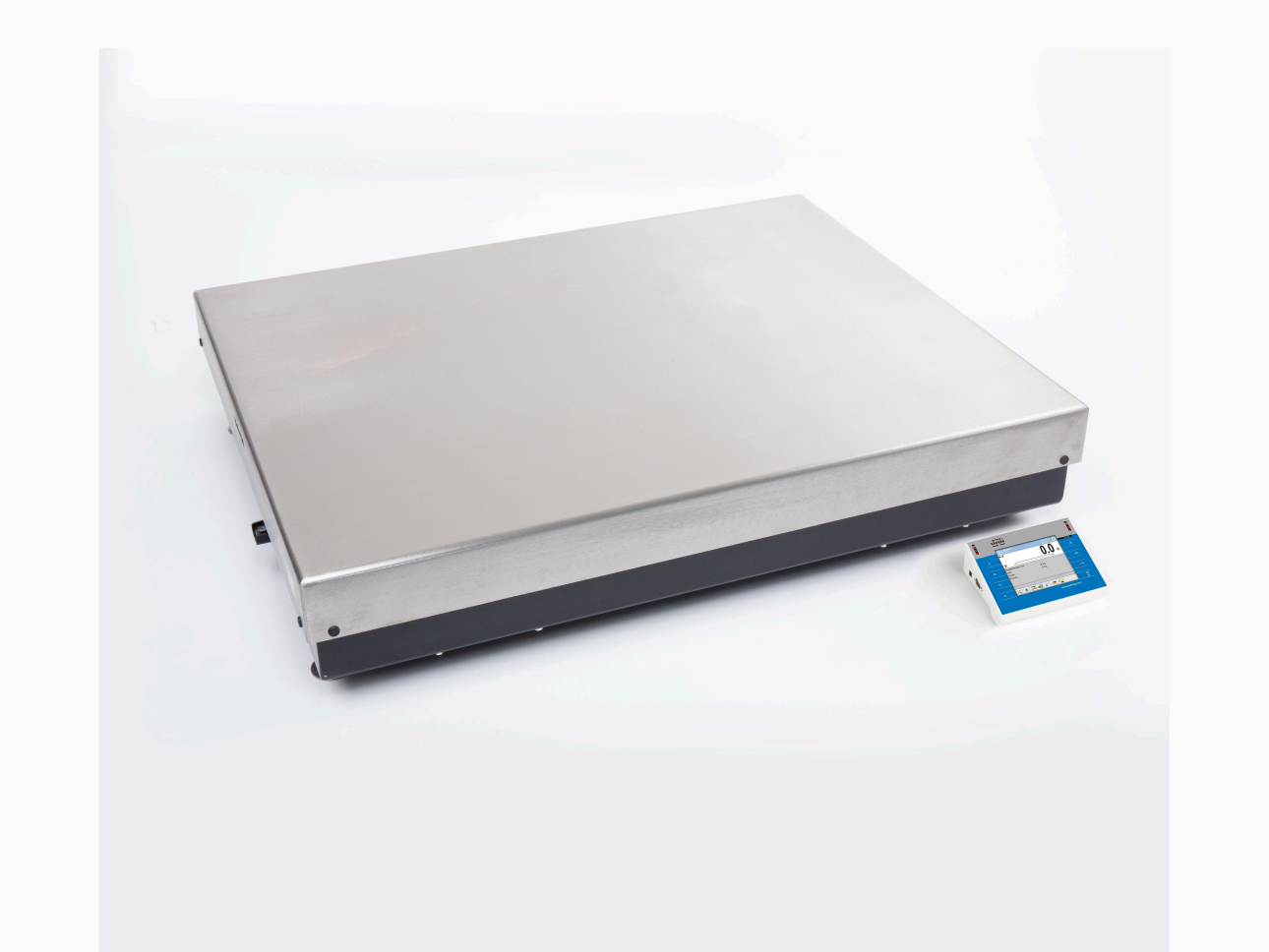

radwag.com

PUE 7.1.300.1.HRP High Resolution Scale

WP-350-0007

More information on the website
radwag.com/en/info,w1,7BA

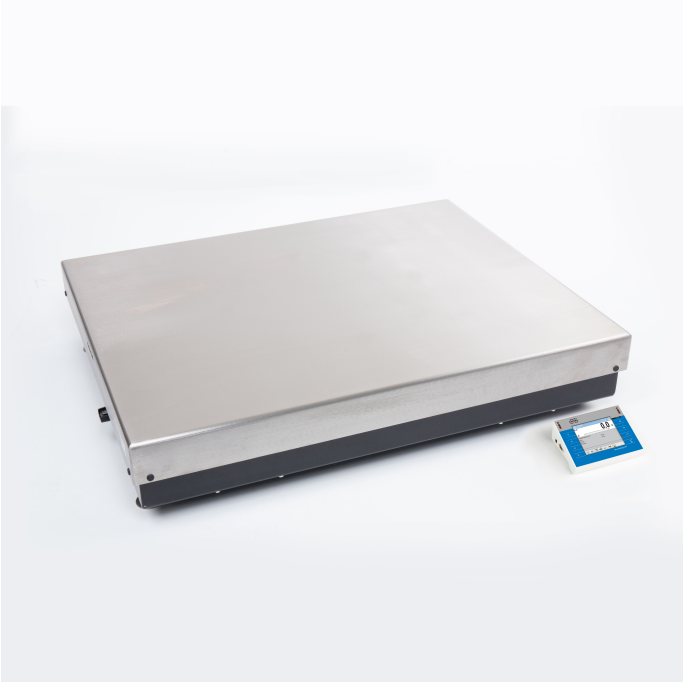

The drawings, photos and graphics used are for illustrative purposes only.

Datasheet

Metrological parameters	
Maximum capacity [Max]	300 kg
Minimum load	50 g
Preload range	60 kg
Readability [d]	1 g
Tare range	-300 kg
Repeatability	3 g
Linearity	±6 g
Stabilization time	3 s
Adjustment	internal (automatic)
Physical parameters	
Display	5.7” resistive colour touchscreen
Weighing pan dimensions	1000×800 mm
Device dimensions W x D x H	360×313×170 mm
Packaging dimensions W x D x H	1000×1200×436 mm
Net weight	128 kg

Physical parameters	
Gross weight	188 kg
Construction	
Protection class	IP 66 / 67 construction, IP 43 terminal
Construction	mild steel St3S
Weighing pan material	Stainless steel AISI304
Communication interface	
Communication interface	2×RS232, 2×USB-A, Ethernet, 4 IN / 4 OUT (digital), Wi-Fi
Electrical parameters	
Power supply	100 – 240 V AC 50/60 Hz
Environmental conditions	
Operating temperature	+10 – +40 °C
Relative humidity	15% – 80%

Repeatability is expressed as the standard deviation of ten load placements.
Relative humidity under non-condensing conditions.
Stabilization time under optimal environmental conditions.

* Wi-Fi® is a registered trademark of Wi-Fi® Alliance.

Accessories (Additional Fee)

Displays
Ethernet cables (scale - Ethernet)
RS 232 cables (scale - printer)
Barcode scanners
Label Printers
Receipt Printer
AP2-1 Current Loop Unit
Additional Weighing platforms Module
RS 232 – USB Converter

Software (Additional Fee)

• E2R Weighing [WX-010-0099]
• Label Editor R02 [WX-010-0094]
• R-Lab [WX-010-0080]
• RADWAG Development Studio [WX-010-0104]
• RAD Key [WX-010-0005]
• RADWAG Remote Desktop [WX-010-0107]
• Scale Editor 2.1 [WX-010-0173]

Device dimensions W x D x H

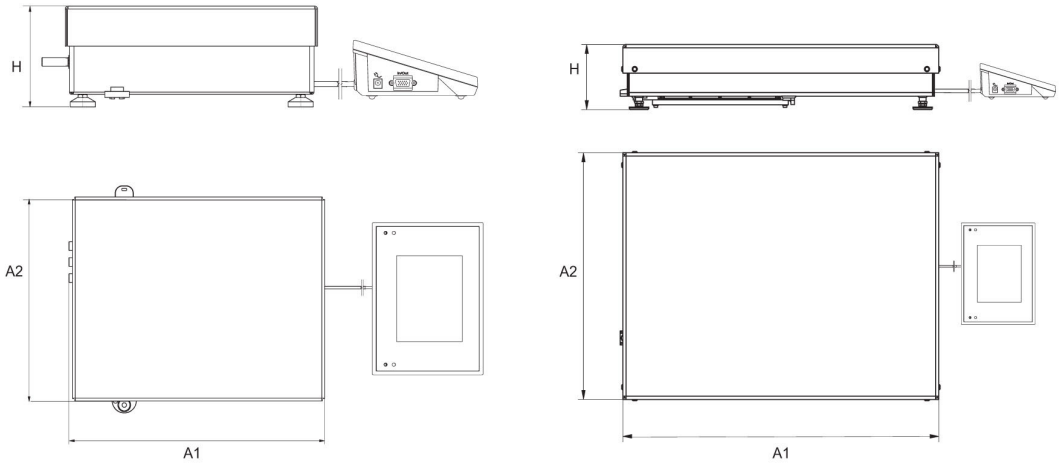

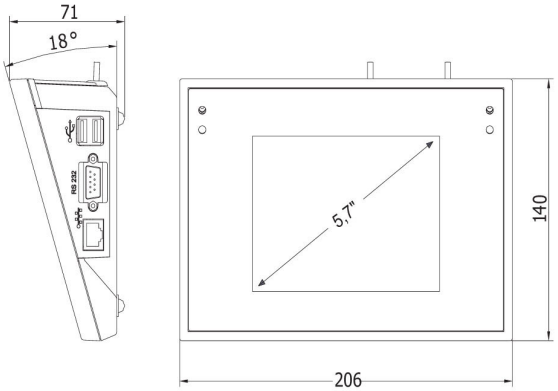

Scale type	A1	A2	H
PUE7.1.16 - 32.HRP	360	280	139±3
PUE7.1.62 -120.HRP	500	500	175±3
PUE7.1.150 - 300.HRP	800	600	175±3
PUE7.1.300.1 -1100.HRP	1000	800	175±3
PUE7.1.2000.HRP	1250	1000	175±3

dimensions in mm