USER GUIDE

PUE 7.1.16.HRP

Radwag

Distributed by AKRIBIS

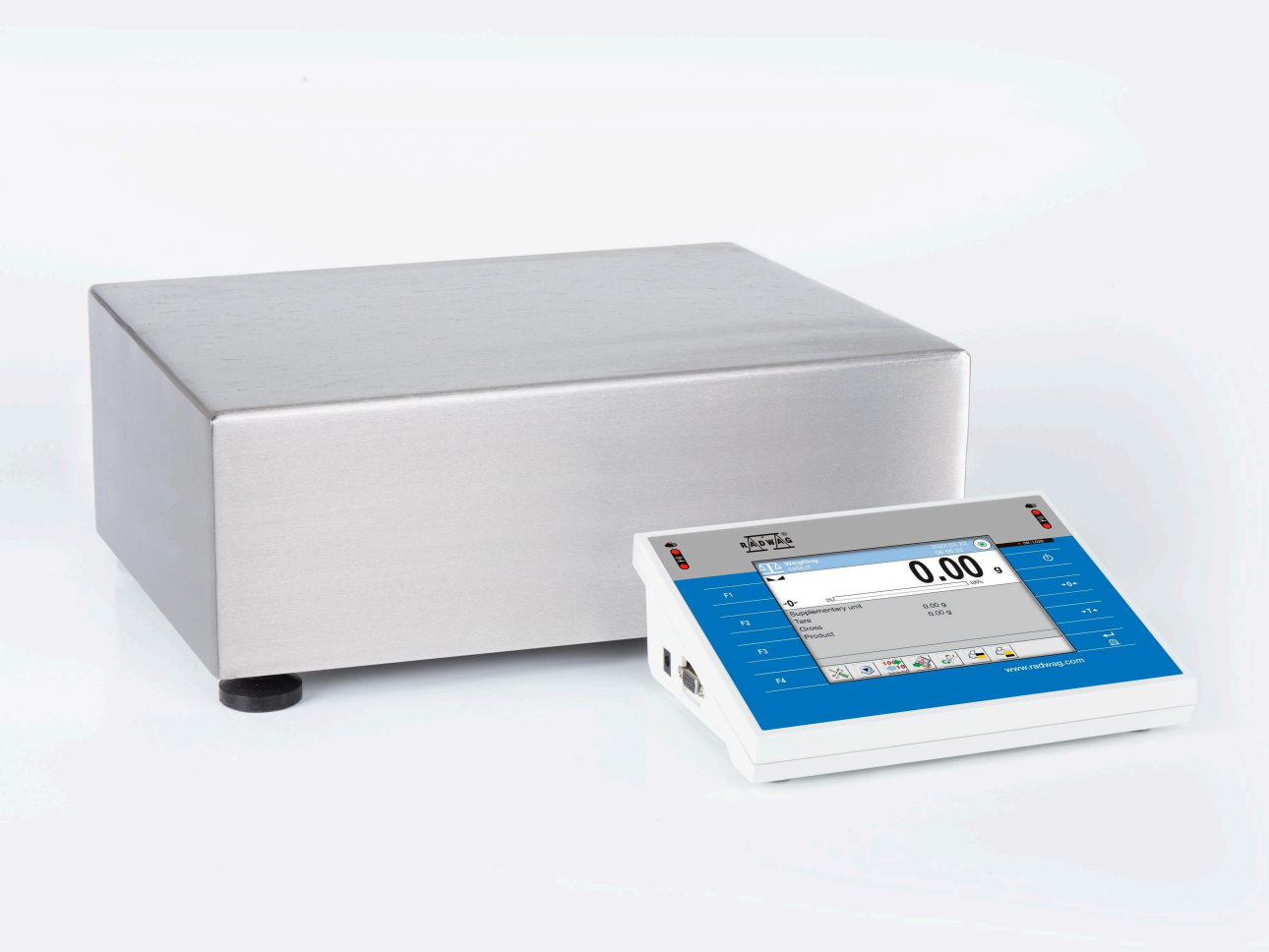

User manual

ITKU-88-04-10-20-EN

Weighing Terminal

PUE 7.1

radwag.com

Scan the QR code to view additional scientific material that may be of interest to you.
There you will find more useful information in an accessible format!

AKRIBIS www.akribis.info contacto@akribis.info

OCTOBER 2020

PRECAUTIONS

Prior to installation, use or maintenance activities, carefully read this user manual. Use the PUE 7.1 Terminal only as intended.

	Prior to the first use, carefully read this user manual. Use the device only as intended.
	Protect the terminal against considerable temperature variation, solar and UV radiation, substances causing chemical reactions.
	The terminal must not be operated in hazardous areas endangered with explosion of gases, and in dusty environments.
	Do not operate the touch panel using sharp-edged tools (knife, screwdriver, etc.).
	In case of damage, immediately unplug the device from the mains.
	Terminals to be decommissioned must be decommissioned in accordance with valid legal regulations.
	Wi-Fi® is a registered trademark of Wi-Fi Alliance. The trademark used in this document serves informative purposes, it does not stand for compliance of any products with products certified by Wi-Fi Alliance organisation.

Contents

1. INTENDED USE 6

2. WARRANTY CONDITIONS 6

3. MAINTENANCE 7
3.1. Cleaning ABS Components 7
3.2. Cleaning Stainless Steel Components 7

4. MECHANICAL DESIGN 7
4.1. Dimensions 7
4.2. Connectors 8
4.2.1. PUE 7.1 Connectors 8
4.2.2. PUE 7.1P Connectors 9
4.2.3. PUE 7.1P Cable Glands 9
4.2.4. RS232 and IN/OUT Connector 9
4.3. Inputs / Outputs 10
4.3.1. Technical Specifications 10
4.3.2. I/O Schematic Diagrams 10
4.4. Operation Panel 11
4.5. Technical Specifications 12

5. TERMINAL INSTALLATION 12
5.1. Unpacking and Installation 12
5.2. Start-Up 12

6. HOME SCREEN 13
6.1. Top Bar 14
6.2. Weighing Result Window 14
6.3. Workspace 14
6.4. Function Buttons 15

7. OPERATING THE MENU 15
7.1. Operation Panel 15
7.2. Return to Weighing 16

8. INSTALLER INSTRUCTION 16
8.1. 6-Wire Load Cell Connection 16
8.2. 4-Wire Load Cell Connection 17
8.3. Connecting Load Cell's Cable Shield 18

9. OPTIONAL EXTENSION MODULES 18
9.1. Additional Platform Module, DP6 18
9.1.1. Technical Specifications 18
9.1.2. Colours of Weighing Platform's Signal Wires 19

10. FACTORY SETUP 19
10.1. Factory Setup Access 19
10.2. Global Parameters 20
10.3. Factory Parameters 22
10.4. Metrological Data 23
10.5. Factory Adjustment 24
10.5.1. External Adjustment 24
10.5.2. Start Mass Determination 24
10.6. Linearity Correction 25
10.6.1. Linearity Determination 25
10.6.2. Corrections 25
10.7. Deleting Linearity 26
10.8. Gravitational Correction 26
10.8.1. Entering the Gravitational Correction Value 26
10.8.2. Gravitational Acceleration Method 27
10.8.3. Latitude Method 28
10.9. Declaring Verified Scale 29

11. ANNEX A - Communication with Modules Taking Function of an Additional Weighing Platform 29
11.1. Communication with a Weighing Module Supporting 'Scale with NT Command' Protocol' 29
11.2. Communication with MW-01 Weighing Module 31
11.2.1. Establishing Communication Between PUE 7.1 and MW-01 31
11.2.2. Defining Transmission Parameters for MW-01 Weighing Module 32
11.2.3. Defining Factory Settings for MW-01 Weighing Module 33
11.3. Communication with HRP Weighing Module 34
11.3.1. Establishing Communication Between PUE 7.1 and HRP 35
11.3.2. Defining Transmission Parameters for HRP Weighing Module 36
11.3.3. Defining Factory Settings for HRP Module 36
11.3.4. Paring of HRP Platform with PUE 7.1 Terminal 40
12. DIAGRAMS OF CONNECTION CABLES 40

1. INTENDED USE

PUE 7.1 weighing terminal is a device intended to be a part of construction of industrial scales based on load cells. Two housing variants are offered: plastic and panel. The terminal has been equipped with 5.7" colour TFT touch screen facilitating intuitive operation keypad-free.

The terminal is equipped with 2 USB connectors, 2 RS232 connectors, Ethernet port, 4 IN/OUT, Wi-Fi® b,g,n. It can connect with barcode scanners, receipt printers, label printers, RFID readers and PC accessories (a mouse, a keyboard, a USB flash drive).

2. WARRANTY CONDITIONS

A. RADWAG feels obliged to repair or exchange all elements that appear to be faulty by production or by construction.
B. Defining defects of unclear origin and means of their elimination can only be realized with assistance of the manufacturer and user representatives.
C. RADWAG does not bear any responsibility for damage or losses resulting from unauthorized or inadequate performing of production or service processes.
D. The warranty does not cover:
   - mechanical damage caused by product exploitation other than intended, damage of thermal and chemical origin, damage caused by lightning, overvoltage in the power grid or other random event,
   - inappropriate cleaning habits.
E. Loss of warranty takes place if:
   - a repair is carried out outside RADWAG authorized service point,
   - service claims intrusion into mechanical or electronic construction by unauthorized people,
   - other than original version of the operating system is installed,
   - the scale does not bear security seal stickers.
F. For detailed warranty conditions read the service card.
G. Contact with the central authorized service: +48 (48) 386 63 30.

3. MAINTENANCE

3.1. Cleaning ABS Components

To clean dry surfaces and avoid smudging, use clean non-colouring cloths made of cellulose or cotton. You can use a solution of water and detergent (soap, dishwashing detergent, glass cleaner). Gently rub the dirty surface and let it dry. Repeat the cleaning process if necessary.

In the case of hard to remove contamination, e.g. residues of adhesive, rubber, resin, polyurethane foam etc., you can use special cleaning agents based on a mixture of aliphatic hydrocarbons that do not dissolve plastics. Before using the cleanser, for all surfaces we recommend carrying out tests. Do not use cleansers containing abrasive substances.

3.2. Cleaning Stainless Steel Components

Avoid using cleansers containing any corrosive chemicals, e.g. bleach (with chlorine). Do not use cleansers containing abrasive substances. Always remove the dirt using microfiber cloth to avoid damage of protective coating.

Daily cleaning routine (removal of small stains):

1. Remove the dirt using cloth dipped in warm water.
2. For best results, add a little bit of dishwashing detergent.

4. MECHANICAL DESIGN

4.1. Dimensions

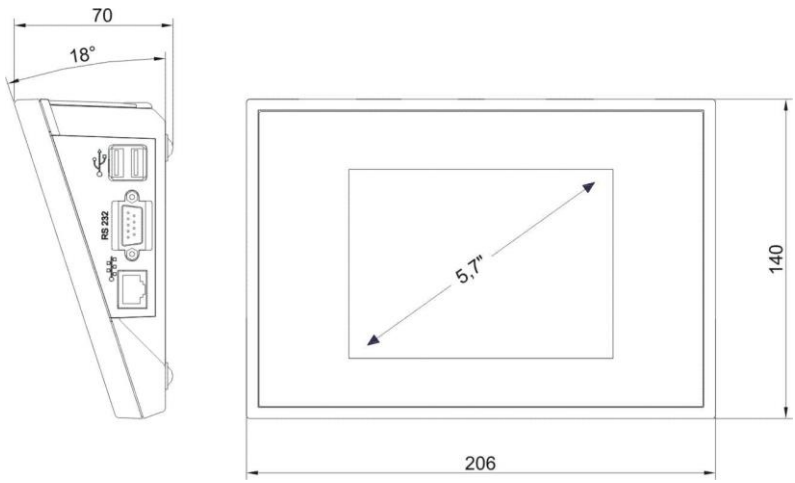

Overall dimensions: PUE 7.1 (plastic housing)

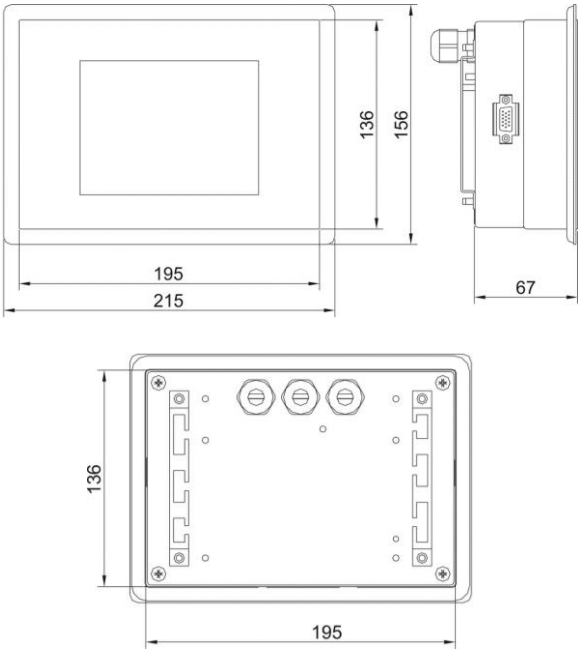

Overall dimensions: PUE 7.1 (panel version)

4.2. Connectors

4.2.1. PUE 7.1 Connectors

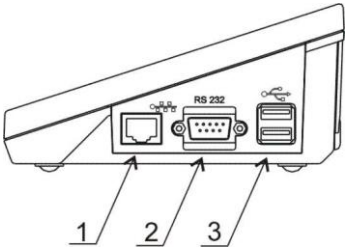	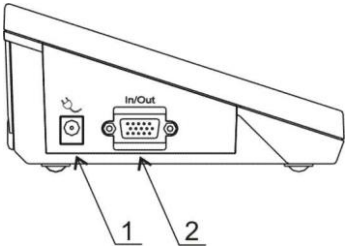
1 – Ethernet RJ45 connector *2 – RS232 (COM1) connector* *3 – USB connector*	*1 – power supply socket* *2 – I/O, RS232 (COM2) connector*

4.2.2. PUE 7.1P Connectors

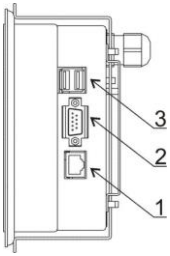	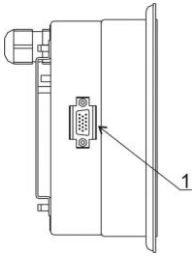
1 – Ethernet RJ45 connector *2 – RS232 (COM1) connector* *3 – USB connector*	*1 – I/O, RS232 (COM2) connector*

4.2.3. PUE 7.1P Cable Glands

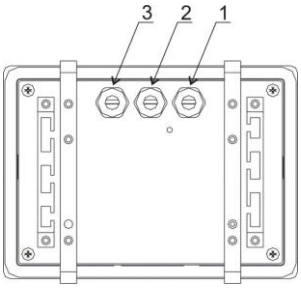	*1 – cable gland for the power cord* *2 – 1, 2 platform cable gland* *3 – 3, 4 platform cable gland*

4.2.4. RS232 and IN/OUT Connector

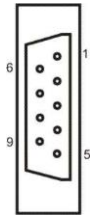	**RS232 - DB9/M connector (male), front:** Pin2 - RxD Pin3 - TxD Pin4 - +5 V DC Pin5 - GND
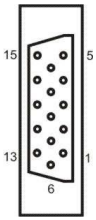	**RS232 - DSUB15/F connector (female), front:** Pin8 - TxD2 Pin9 - 5VDC Pin10 - GND Pin13 - RxD2

4.3. Inputs / Outputs

Standard PUE 7.1 terminal is equipped with 4 optoisolated inputs and 4 semiconductor outputs (solid-state relays). The signals are fed through DSUB15/F connector.

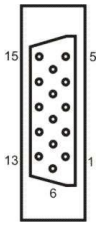	**IN/OUT, RS232 - DSUB15/F connector (female), front:** Pin1 – GNDWE Pin2 - OUT1 Pin3 - OUT2 Pin4 – COMM Pin6 - IN4 Pin7 - IN3 Pin11 - IN2 Pin12 - IN1 Pin14 - OUT4 Pin15 - OUT3

4.3.1. Technical Specifications

Output parameters	
Output quantity	4
Output type	Solid-state relay
Cable cross-section	0.14 - 0.5 mm^2
Maximum output current	0.5 A DC
Maximum output voltage	30 VDC
Input parameters	
Input quantity	4
Input type	Optoisolated
Cable cross-section	0.14 - 0.5 mm^2
Input voltage range	5÷24 VDC

4.3.2. I/O Schematic Diagrams

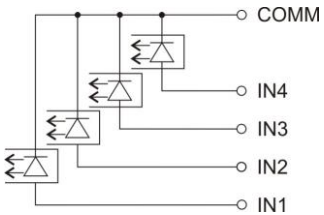	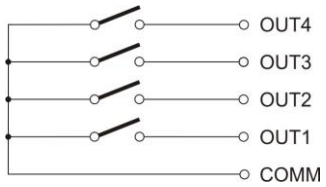
4 inputs	*4 outputs*

4.4. Operation Panel

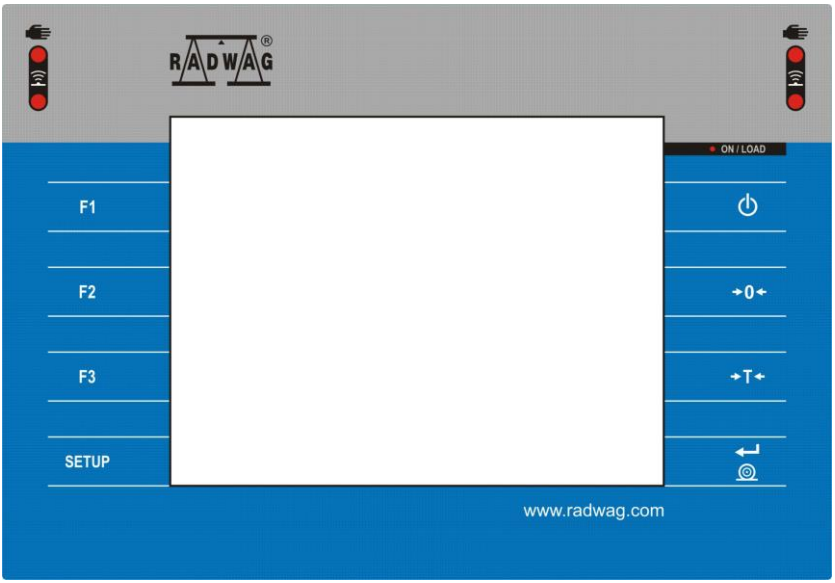

Keys

⏻	Press to switch the scale ON/OFF.
→0←	Press to zero the scale.
→T←	Press to tare the scale.
↵ ◎	Press to send the weighing result to a printer or a computer.
SETUP	Press to enter the menu (function button).
F1	Programmable key.
F2	Programmable key.
F3	Programmable key.

4.5. Technical Specifications

	PUE 7.1	PUE 7.1P
Housing	plastic	panel - stainless steel
Ingress protection	IP43	Panel version - IP66/67, Terminal + panel – IP32
Display	TFT 640x480 5.7” with touch panel	
Power supply	10 – 28 VDC/21W	
Operating temperature	-10 °C ÷ 40 °C	
OIML class	III	
Verification units quantity	6000	
Max input signal	19.5 mV	
Max voltage per verification unit	3.25 µV	
Min voltage per verification unit	0.4 µV	
Minimum load cell impedance	50 Ω	
Maximum load cell impedance	1200 Ω	
Load cell power supply	5 V	
Load cell wiring	4 or 6 wires + Shield	
Weighing platform quantity.	2 maximum	
Communication interfaces	2xRS232, USB, Ethernet, 4IN/4OUT	
Wi-Fi® 2.4GHz b,g,n	Standard	None
Multi-range option	YES	

5. TERMINAL INSTALLATION

5.1. Unpacking and Installation

A. Take the terminal out of the packaging.
B. Connect the terminal to a weighing platform, next place the weighing device on a flat and even surface. Keep it away from any sources of heat.
C. To level the weighing instrument turn its feet. Keep turning the feet until the air bubble takes central position:

5.2. Start-Up

The terminal can be connected to the mains only with a power supply that comes standard with the particular model.

Nominal voltage of the power supply (specified on the power supply data plate) has to be compatible with the mains nominal voltage.

Procedure:

- Plug the power supply to the mains.
- Connect the power supply plug to the socket located on the scale's side. An ON/LOAD diode on terminal housing is turned on, ON / LOAD.
- Press ⏻ key, it is to be found at the top of the operation panel. Mind to keep the key pressed for about 0.7 s. operating system and RADWAG program are loaded, this is signalled with blinking of red ON/LOAD diode.
- Upon completed start-up, the home screen is displayed automatically.
- The device is ready for operation.

⚠	***For detailed information regarding terminal program read „PUE 7.1 Terminal Software Manual".***

6. HOME SCREEN

The home screen can be divided into 4 sections: a top bar, a weighing result window, workspace, pictograms.

Home screen layout:

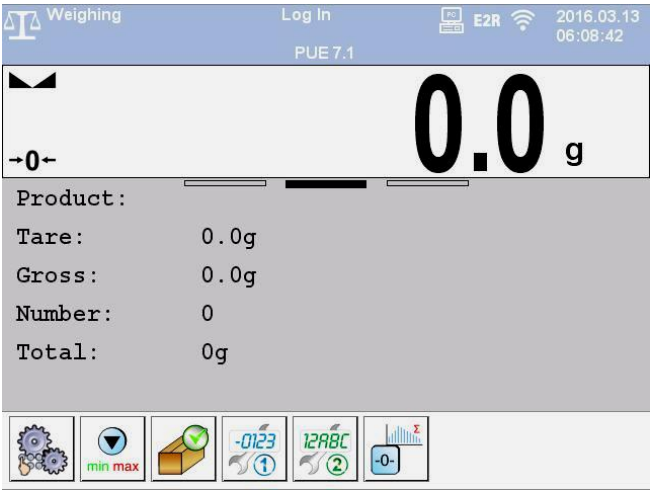

6.1. Top Bar

The top bar displays the following information:

Weighing	Working mode name and symbol.
Log In	Login entry.
PC	Symbol informing that communication with a PC is on.
	Symbol informing that Wi-Fi® connection is on.
E2R	Symbol informing that communication with the E2R SYSTEM is on.
PUE 7.1	Weighing device name.
2012.06.06 06:06:06	Date and time.

6.2. Weighing Result Window

Weighing result window provides all weighing-related data.

6.3. Workspace

The workspace is to be found underneath the weighing result window.

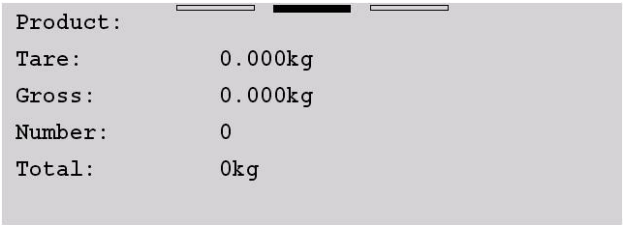

The workspace comprises 3 display templates. Graphics at the top inform which of the 3 templates is currently displayed. In order to switch to a different template drag the workspace screen to the left/right respectively.

6.4. Function Buttons

On-screen function buttons are to be found underneath the workspace.

You can define on-screen function buttons individually for each working mode.

7. OPERATING THE MENU

7.1. Operation Panel

SETUP	Press to go to the menu.
	Press to scroll the menu up.
	Press to scroll the menu down.
	Press to scroll the menu up-down fast.
	Press to confirm modifications.
	Press to exit, the parameter remains unmodified.
	Press to add a database record.
	Press to disable the selected record. Press to log out.
D	Press to search a particular database record by date.
N	Press to search a particular database record by name.
C	Press to search a particular database record by code.
	Press to print a database record.
	Press to export control and average tare reports for PGC and SQC modes. Press to export dosing and formulation reports.
	Press to clear dialog box content.
	Press to enable/disable an on-screen keyboard.
	Press to read printout template saved to *.lb file (the button becomes active upon USB flash drive connection).

	Press to save the template to *.lb file (the button becomes active upon USB flash drive connection).
	Press to select printout template variables out of the list.
	Press to go back.
	Press to go to the home screen directly.

7.2. Return to Weighing

Introduced modifications are automatically recorded upon return to the home screen. To return to the home screen:

- press key repeatedly, keep pressing the key until you see the home screen,
- press field, located in the top bar, the home screen is displayed immediately.

8. INSTALLER INSTRUCTION

The PUE 7.1 terminal can be a base component of a load cell scale.

8.1. 6-Wire Load Cell Connection

Connect 6-wire load cell to the main board following the diagram below:

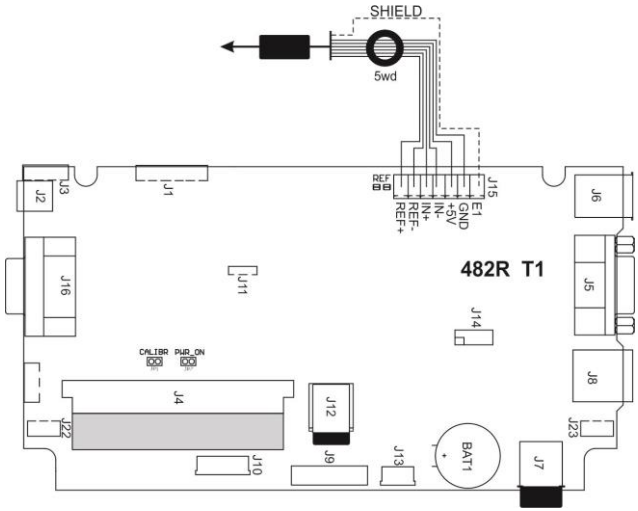

6-wire load cell connection

Radwag A/D converter board	Load cell signals	NOTES
E	SHIELD	See section 8.3
REF+	SENSE +	Z8 not soldered
REF-	SENSE -	Z4 not soldered
IN+	OUTPUT+	
IN-	OUTPUT-	
+5V	INPUT+	
AGND	INPUT-	

8.2. 4-Wire Load Cell Connection

Connect 4-wire load cell to the main board following the diagram below:

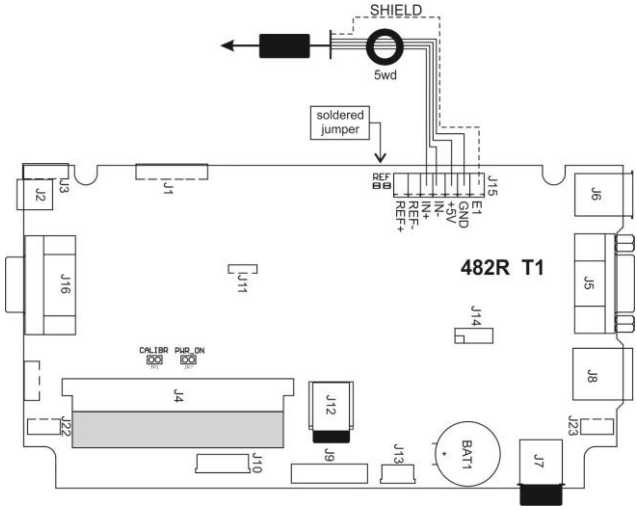

4-wire load cell connection

Radwag A/D converter board	Load cell signals	NOTES
E	SHIELD	See section 8.3
REF+	-	Soldered jumper
REF-	-	Soldered jumper
IN+	OUTPUT+	
IN-	OUTPUT-	
+5V	INPUT+	
AGND	INPUT-	

8.3. Connecting Load Cell's Cable Shield

	Load cell with galvanic connection of the signal cable shield	Load cell without galvanic connection of the signal cable shield
Scale with an terminal in a plastic housing - the platform connected with the terminal via load cell's signal cable only.	**do not connect**	**E**
Scale of compact design (scale with an terminal in a plastic housing on a post)	**do not connect**	**E**
Scale with an terminal in a metal housing - the platform connected with the terminal via load cell's signal cable only.	**Point A**	**Point A**

E *– solder pad on the main board and additional A/D converter boards*.
Point A *– threaded pin, connected with terminal's housing galvanically (metal housing).*

9. OPTIONAL EXTENSION MODULES

9.1. Additional Platform Module, DP6

The DP6 module expands terminal functionality, with it an additional platform can be operated. The module is intended to be mounted inside the terminal. Along with the DP6 module (484R board), in the terminal's housing cover an additional grommet is installed, through it the additional platform cable is fed.

9.1.1. Technical Specifications

Operating temperature	-10 °C ÷ 40 °C
OIML	III
Verification unit [e]	6000
Maximum input signal	19.5 mV
Maximum voltage per verification unit	3.25 µV
Minimum voltage per verification unit	0.4 µV
Minimum load cell impedance	50 Ω
Maximum load cell impedance	1200 Ω
Load cell power supply	5 V
Load cell wiring	4 or 6 wires + Shield
Multi range option	Yes

9.1.2. Colours of Weighing Platform's Signal Wires

Markings RADWAG	Colour	Marking of terminals (solder pads) on RADWAG A/D converter boards
+INPUT	brown	+5V
-INPUT	green	AGND
+OUTPUT	yellow	+IN
- OUTPUT	white	-IN
SENSE	grey	+REF
- SENSE	pink	- REF
SHIELD	yellow green	by shield connection guidelines

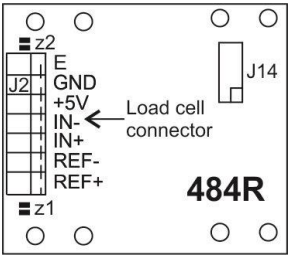

Figure 18. Additional A/D converter module – DP6

10. FACTORY SETUP

To access and modify factory settings, and parameters that are made available for a user, run Factory Setup mode. Running Factory Setup mode enables the technician (user) to define the scale.

10.1. Factory Setup Access

- Press ⏻ switch to power the terminal, wait for the operating system to be loaded.
- Upon completed start-up, the home screen is displayed automatically.
- Through special opening, Phi 3.2 mm, located in the bottom part of the terminal, press **S1** internal switch, do it using a rigid tool (screw driver, hex key, etc.)

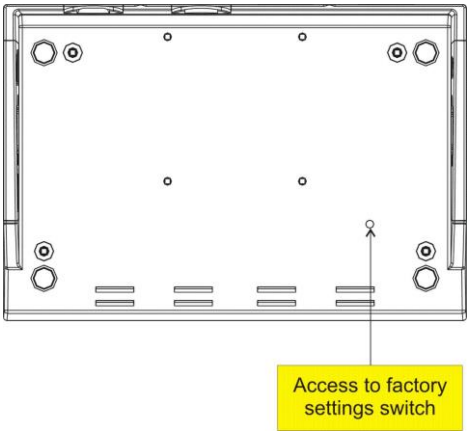

Factory Setup access switch

- Press SETUP key to enter the main menu. Two submenus are displayed: **Global**, **Factory**.

10.2. Global Parameters

NAME	DEFAULT	VALUES	DESCRIPTION
Top bar - metrology	-	-	Activation of metrological data in the top bar of the home screen (read section 10.4).
Platform quantity	1	1 ÷ 4	Weighing platform quantity.
Weighing module type	Standard	-	Declaring type of the weighing module connecting with the terminal (read section 11).
Verified	✓ No	✓ No, ✓ Yes	Declaring whether the scale is verified or not.
Request modules pairing	✓ Yes	✓ No, ✓ Yes	Enabling/disabling pairing of modules connecting with PUE 7.1 terminal.
NTEP	✓ No	✓ No, ✓ Yes	Enabling/disabling modifications in „Parts Counting" mode for verified scales (USA market).
Converter speed	50	6.25, 12.5, 25, 50, 100	Converter rate change.
Proximity sensor timeout	500	0 ÷ 5000	Time interval, given in [ms], for proximity sensors activation.
g-cor.	-	-	Determining gravitational correction value (read section 10.8).
Serial number	0	-	Serial number of the scale.

Additional communication module	-	RS 485	Enabling/disabling additional RS485 port for communication with MWMH, MWSH, MWLH, HRP modules.
Weighing data storage period [days]	0	-	Protection against deleting data from weighing, PGC and average tare databases, data storage period is given in days.
Service	-	-	Service mode.
Advanced settings	**-**	**-**	Submenu containing advanced service settings.
Working mode accessibility	-	-	Enabling/disabling access to particular working modes.
Menu accessibility	-	-	Enabling/disabling access to the following submenus: Display, Printouts, Inputs/Outputs, Import/Export.
Databases accessibility	-	-	Enabling/disabling accessibility of selected databases.
Reports accessibility	-	-	Enabling/disabling accessibility of selected reports.
Database configuration	-	-	Database setup submenu (read „PUE 7.1 Terminal Software Manual”).
[ct] available	✓ No	✓ No, ✓ Yes	Enabling/disabling metrological parameters, given in [ct] unit, in the top bar of the home screen.
Supplementary units	Yes	✓ No, ✓ Yes	Enabling/disabling supplementary unit.
Rounded tare mode	No	✓ No, ✓ Yes	Enabling/disabling rounded tare mode.
Tare lockout	No	✓ No, ✓ Yes	Enabling/disabling tare function.
Import	-	-	Import of parameters from a USB flash drive.
Export	-	-	Export of parameters to a USB flash drive.
Update folder	-	-	Location of ON-LINE updates.
Copy events file	-	-	Copying 'event file' to a USB flash drive.
Set default settings	-	-	Setting default scale configuration (button functions, printouts, text information).
Reset to factory default settings	-	-	Restoring default global settings.
Wi-Fi	Yes	✓ No, ✓ Yes	Enabling/disabling Wi-Fi module.
FLASH memory usage	-	0 ÷ 100	FLASH memory usage [%].
RAM usage	-	0 ÷ 100	RAM usage [%].

10.3. Factory Parameters

NAME	DEFAULT	VALUES	DESCRIPTION
Metrology	**-**	**-**	**Metrology-related settings.**
Reading unit: range 1	0.001	0.001 ÷ 50	Rounding of the last digit and position of a decimal point for weighing range I.
Reading unit: range 2	0.001	0.001 ÷ 50	Rounding of the last digit and position of a decimal point for weighing range II.
Reading unit: range 3	0.001	0.001 ÷ 50	Rounding of the last digit and position of a decimal point for weighing range III.
Range	6.009	-	Maximum capacity + overload.
Range 2 *	0.000	-	Switching point of range II.
Range 3 **	0.000	-	Switching point of range III.
Adjustment weight mass	2	-	Adjustment weight mass.
Adjustment unit	kg	g, kg, lb	Adjustment unit.
g-cor.	1	-	Gravitational correction value.
Autozero range	0.25	0.1 ÷ 5	Autozero range (in divisions).
Stability range	1	0.1 ÷ 5	Stability range in [d] units.
Stability time	0.8	0 ÷ 20	Stability time in [s].
Start mass control	1	0, 1, 2	Start mass control: 0 – disabled, 1 – range: from -5% to +15% of start mass, 2 – range: from -20% to +20% of start mass,
Digit marker	No	☑ No, ☑ Yes	Enabling/disabling digit marker.
Adjustment	**-**	**-**	**Adjustment process (read section 10.5).**
Start mass determination	-	-	Determining platform start mass.
Adjustment	-	-	Platform calibration.
Adjustment with pan loaded	-	-	Loaded platform calibration.
Start mass	-	-	Start mass value (in divisions).
Adjustment factor	100	-	Adjustment factor.
Adjustment weight mass			Adjustment weight mass.
Linearity	**-**	**-**	**Linearity correction (read section 10.6).**
Determine	-	-	Determining linearity correction points.
Delete	-	-	Deleting linearity correction.
Corrections	-	-	Entering corrections for linearity correction points.

Information	**-**	**-**	**Information (read-only).**
Serial number	0	-	Preview of scale serial number.
Reading unit: range 1	0.001	-	Preview of unit value of range I.
Reading unit: range 2	0.001	-	Preview of unit value of range II.
Range	6.009	-	Preview of range I value.
Range 2	0.000	-	Preview of range II value.
Weighing firmware version	-	-	Version of the weighing module software.
Divisions	-	-	Display of A/D converter divisions.
Set default	**-**	**-**	**Restoring platform's factory settings.**

***)** *- For I-range scales set **0**,*
****)** *- For I- or II-range scales set **0** value.*

	The above table presents menu structure for one platform. When more than one platforms are in use, enter <Factory parameters> menu to see a list of all the platforms. Each platform is defined by an analogous set of parameters (see the above table).

10.4. Metrological Data

- Enter **<** **Global /** **Top bar – metrology>** submenu, set required values:

PARAMETER NAME	DEFAULT	VALUES	DESCRIPTION
Activation	No	Yes, No	Enabling/disabling display of metrological data in the top bar of the home screen.
Scale type	-	PUE 7.1, WLY, WPY, HRP	Selecting scale type, the scale type is conditioned by an terminal type.
Scale name	-	-	Special name and/or name of RADWAG distributor's device (6 characters maximum). The name entered for this parameter replaces the selected “Scale type” value.

10.5. Factory Adjustment

10.5.1. External Adjustment

- Enter **<** SETUP **/** **Factory/** **Adjustment>** submenu and go to **<** **Adjustment>** parameter.
- Unload the platform.
- Message **<Unload the platform>** is displayed.
- Press button. Start mass is determined, message **<Start mass determination>** is displayed.
- Upon completed start mass determination procedure, message **<Load xxx>** is displayed (where: xxx – the adjustment weight mass).
- Load the platform with the required adjustment weight and press button.
- Upon completed procedure, message **<Operation completed successfully>** is displayed.
- Press button to confirm and return to weighing, saving changes.

	Adjustment of an additional platform is analogous.

10.5.2. Start Mass Determination

- Enter **<** SETUP **/** **Factory /** **Adjustment>** submenu and go to **<** **Start mass determination>** parameter.
- Unload the platform.
- Message **<Unload the platform>** is displayed.
- Press button. Start mass is determined, message **<Start mass determination>** is displayed.
- Upon completed procedure, message **<Operation completed successfully>** is displayed.
- Press button to confirm and return to weighing, saving changes.

	Start mass determination for an additional platform is analogous.

10.6. Linearity Correction

10.6.1. Linearity Determination

Determining mass for each step of the linearity and corrections via scale software.

Procedure:

- Enter **<** **Factory/** **Linearity>** submenu and go to **<Determine>** parameter. **<Mass>** dialog box and an on-screen keyboard opens.
- Unload the platform.
- Enter the required mass value (the first linearity correction point) and press button to confirm. Message **<Load xxx>** is displayed (where: xxx – the entered mass value).
- Make sure that the weighing pan is unloaded, →0← and pictograms must be displayed, if not press key to zero the scale.
- Load the weighing pan with weight of mass equal to weight value specified for the first linearity correction point, wait for a stable indication and press button.
- **<Mass>** dialog box with an on-screen keyboard opens, declare the next linearity correction point.
- Proceed likewise for the second linearity correction point. Scale software enables determining 6 linearity correction points maximum.
- Upon confirmation of the last (sixth) linearity correction point, **<Linearity>** submenu is displayed automatically.
- If you want to declare less than 6 points, press button of **<Mass>** dialog box.
- **<Linearity>** submenu is displayed automatically.
- Return to weighing, saving changes.

⚠	***Shall zero value be confirmed, by pressing button, as linearity correction point, message <Value too low> is displayed.***

10.6.2. Corrections

Editing correction values for linearity points.

Procedure:

- Enter **<** **Factory /** **Linearity>** submenu.

- Select **<Corrections>** parameter. A list of determined linearity correction points is displayed. The list contains previously declared mass values for each correction point and deviations, given in reading units.
- Select a respective entry, **<Mass>** dialog box with an on-screen keyboard, providing a previously declared mass value is displayed.
- Make sure that the weighing pan is unloaded, →0← and ◣◢ pictograms must be displayed, if not press →0← key to zero the scale.
- Load the weighing pan with the declared mass and press button.
- **<Correction>** dialog box with an on-screen keyboard opens automatically.
- If the declared value differs from the displayed stabilised value then a respective correction needs to be entered, use the on-screen keyboard.
- If there is a need to enter negative value, write „-" sign before the number.
- Press button to confirm, list of linearity correction points is displayed again.
- Proceed likewise for the next linearity correction point.
- Return to weighing, saving changes.

10.7. Deleting Linearity

- Enter **< Factory / Linearity>** submenu.
- Select **<Delete>** parameter. Message **<Delete?>** is displayed.
- Press button to confirm.
- Return to weighing, saving changes.

10.8. Gravitational Correction

The function of gravitational correction compensates changes of earth gravity being a result of different latitude and longitude. It enables correct calibration of the weighing device away from the place of use. The value of gravitational correction can be:

- entered if known,
- determined by gravitational acceleration method,
- determined by latitude method.

10.8.1. Entering the Gravitational Correction Value

The gravitational correction value must be entered with reference to tables prepared by „Radwag Balances and Scales" or calculated using the below formula:

$$Gcor = \frac{g_{uzyt.}}{g_{kal.}}$$

⚠	***If the scale is calibrated at the place of use then gravitational correction value (<g-cor.> parameter) is 1.00000. If the scale is calibrated away from the place of use (longitudinal change) the value of <g-cor.> parameter must be corrected.***

Procedure:

- Enter **<** **Factory /** **Metrology>** submenu.
- Select **<g-cor.>** entry, **<g-cor.>** dialog box with an on-screen keyboard opens.
- Enter a respective value and press button to confirm.
- Return to weighing, saving changes.

10.8.2. Gravitational Acceleration Method

The method consists in automatic calculation of the value of gravitational correction, **<g-cor.>**, on the basis of:

- gravitational acceleration of the place where the calibration/adjustment is carried out,
- gravitational acceleration of the place of use.

Procedure:

- Enter **<** **Global /** **g-cor.>** submenu.
- Select **<g-cor. method>** entry, **<Enter g-cor. value for adjustment place>** dialog box with an on-screen keyboard opens, the box provides value of gravitational acceleration for RADOM city in Poland.
- If the scale is adjusted in RADOM, press button to confirm the displayed value.
- If the scale is adjusted elsewhere, enter the value respective for a particular spot and press button to confirm.
- **<Enter g-cor. value for place of use>** dialog box with an on-screen keyboard opens automatically.
- Enter a respective value and press button to confirm, a message providing the calculated **<g-cor.>** (gravitational correction) value is displayed.

- Press button to confirm, the newly calculated gravitational correction value is automatically attributed to **<g-cor.>** parameter of **< Factory / Metrology>** submenu.
- Return to weighing, saving changes.

10.8.3. Latitude Method

The method consists in automatic calculation of value of gravitational correction, **<g-cor.>**, on the basis of:

- gravitational acceleration of the place where the calibration/adjustment is carried out,
- degrees of latitude of the place of use,
- minutes of latitude of the place of use,
- altitude of the place of use.

Procedure:

- Enter **< Global / g-cor.>** submenu.
- Select **<Latitude method>** entry, **<Enter g-cor. value for adjustment place>** dialog box with an on-screen keyboard opens, the box provides value of gravitational acceleration for RADOM city in Poland.
- If the scale is adjusted in RADOM, press button to confirm the displayed value.
- If the scale is adjusted elsewhere, enter the value respective for a particular spot and press button to confirm.
- **<Enter latitude degrees for place of use>** dialog box with an on-screen keyboard opens automatically.
- Enter a respective value and press button to confirm, **<Enter latitude minutes for place of use>** dialog box with an on-screen keyboard opens automatically.
- Enter a respective value and press button to confirm, **<Enter altitude for place of use>** dialog box with an on-screen keyboard opens automatically.
- Enter a respective value and press button to confirm; a message providing the calculated **<G>** (gravitational acceleration coefficient for place of use) and **<g-cor.>** (gravitational correction) values are displayed.
- Press button to confirm, the newly calculated gravitational correction value is automatically attributed to a respective parameter of **< Factory / Metrology>** submenu.
- Return to weighing, saving changes.

10.9. Declaring Verified Scale

Some special functions of the program are restricted for verified scales. **<Verified>** parameter has been introduced in order to automatically lock access to the restricted functions. **<Verified>** parameter must be set to **<No>** value for users who do not need to use verified scale, with this their device functionality is boosted.

Procedure:

- Enter **<** **Global /** **Verified>** submenu and set a respective value (- verified scale, - non-verified scale).

11. ANNEX A - Communication with Modules Taking Function of an Additional Weighing Platform

In order to declare type of a weighing module connecting with the PUE 7.1 terminal go to: **<** SETUP **/** **Global>** submenu.

⚠	***Weighing module's transmission parameters (baud rate, computer port) and PUE 7.1 terminal's transmission parameters must be compatible. Configuration of transmission parameters of weighing modules connecting with PUE 7.1 terminal is to be found in user manual of a particular scale.***

11.1. Communication with a Weighing Module Supporting 'Scale with NT Command' Protocol'

Communication between **PUE 7.1** terminal and a weighing module supporting **„Scale with NT Command"** protocol is carried out via RS232 or Ethernet interface.

Compatible weighing instruments:

- WLC, WTC, C315 scales.
- AS X2, AS R, AS 3Y balances.
- PS X2, PS R, PS 3Y balances.
- APP X2, APP R, APP 3Y balances.
- MAS, MPS weighing modules.

Procedure:

- Connect the associated device to the PUE 7.1 terminal using RS232 cable, switch both devices on.
- Enter global parameters submenu of the PUE 7.1 terminal.

- Go to **<Weighing module type>** parameter and select the required weighing module number.
- Select the associated device from the list. Message **<Restart to implement changes>** is displayed.
- Press button to confirm and return to weighing, saving changes, next restart the device.
- Enter factory parameters submenu of the PUE 7.1 terminal.
- Go to a modified submenu of the weighing platform, list of the following parameters is displayed:

NAME	DEFAULT	VALUES	DESCRIPTION
Port *	None	None, RS232 (1), RS232 (2)	Declaring number of RS232 port of PUE 7.1 terminal for communication with the associated device.
IP Address	0.0.0.0	-	Declaring IP address of PUE 7.1 terminal for communication with the associated device.
IP port	0	-	Declaring IP port of PUE 7.1 terminal for communication with the associated device via Ethernet (by default: **4001**).
Reading unit: range 1	0.001	0.001 ÷ 50	Rounding of the last digit and position of a decimal point for weighing range I of the associated device.
Reading unit: range 2	0.001	0.001 ÷ 50	Rounding of the last digit and position of a decimal point for weighing range II of the associated device.
Reading unit: range 3	0.001	0.001 ÷ 50	Rounding of the last digit and position of a decimal point for weighing range III of the associated device.
Range	0	-	Weighing range of the associated device.
Range 2	0	-	Switching point of weighing range II of the associated device.
Range 3	0	-	Switching point of weighing range III of the associated device.
Adjustment unit	G	g, kg, lb	Adjustment unit of the associated device.
Refresh *	-	-	Automatic readout of metrology parameters from the associated device.

***)** *- Transmission parameters of PUE 7.1 terminal must be compatible with the associated device. To set transmission parameters of PUE 7.1 go to **„SETUP/ Communication”** submenu.*

- Set respective parameter values and return to weighing, saving changes.

11.2. Communication with MW-01 Weighing Module

Connection between PUE 7.1 terminal and MW-01 weighing module requires:

- establishing communication between the PUE 7.1 and the MW-01,
- editing and record of transmission parameters, and all factory parameters, to the MW-01 module memory, using the PUE 7.1 terminal.

11.2.1. Establishing Communication Between PUE 7.1 and MW-01

Connection between PUE 7.1 terminal and MW-01 weighing module is carried out via **RS232** or **Ethernet** interface.

Procedure:

- Connect the MW-01 module to the PUE 7.1 terminal using RS232 or Ethernet cable (conditioned by model), and switch both devices on.
- Enter global parameters submenu of the PUE 7.1 terminal.
- Go to **<Weighing module type>** parameter and select the required weighing module number.
- Select **<MW-01>** from the list. Message **<Restart to implement changes>** is displayed.
- Press button to confirm and return to weighing, saving changes, next restart the device.
- Enter factory parameters submenu of the PUE 7.1 terminal.
- Go to a modified submenu of the weighing platform.
- Enter **„Miscellaneous / PUE Y: Communication"** submenu, list of the following parameters is displayed:

NAME	DEFAULT	VALUES	DESCRIPTION
Port *	None	None, Tcp, RS232 (1), RS232 (2)	Declaring port type of PUE 7.1 terminal for communication with MW-01 module.
Address	0	-	Declaring address of PUE 7.1 terminal for communication with MW-01 module (default address value in MW-01 module is **1**).
IP Address	0.0.0.0	-	Declaring IP address of PUE 7.1 terminal for communication with MW-01 module via Ethernet (by default the IP address value in MW-01 module is **192.168.0.2**).
IP port	0	-	Declaring IP port of PUE 7.1 terminal for communication with MW-01 module via Ethernet (by default the IP port value in MW-01 module is **4001**).

***) -** In *case of connection via RS232, the default value of baud rate for MW-01 weighing module is **57600bit/s**.*

	Declaring RS232 or TCP port of PUE 7.1 terminal for communication with MW-01 module requires respective transmission parameters to be set for these ports.
	MW-01 module's transmission parameters and transmission parameters of PUE 7.1 terminal's ports must be compatible. To set transmission parameters of PUE 7.1 terminal's ports go to „SETUP/ Communication" submenu.

- Set respective parameter values and return to weighing, saving changes.

11.2.2. Defining Transmission Parameters for MW-01 Weighing Module

In order to set transmission parameters for MW-01 weighing module it is necessary to put a jumper onto the module's main board:

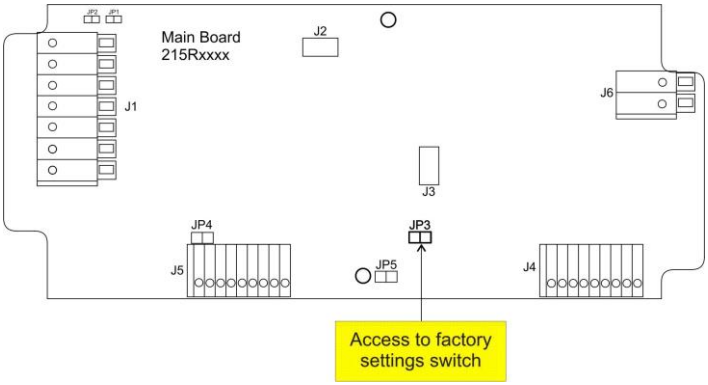

Procedure:

- Make sure that communication between the PUE 7.1 and the MW-01 is established, and enter factory parameters submenu of the PUE 7.1 terminal.
- Go to a modified submenu of the weighing platform.
- Enter **„Miscellaneous / MW-01: Communication"** submenu, list of the following parameters is displayed:

NAME	DEFAULT	VALUES	DESCRIPTION
Address	1	-	Setting address of MW-01 module.
IP Address	192.168.0.2	-	Setting IP address of MW-01 module.
Subnet mask	255.255.255.0	-	Setting subnet mask of MW-01 module.
Default gateway	192.168.0.1	-	Setting default gateway of MW-01 module.

Port	4001	-	Setting local port of MW-01 module.
Timeout	0	0÷300s	Setting time interval after passage of which an inactive Ethernet connection gets broken.

- Set respective parameter values and return to weighing, saving changes.

⚠	***In order to save changes it is necessary to restart MW-01 weighing module.***

11.2.3. Defining Factory Settings for MW-01 Weighing Module

⚠	***In order to set factory parameters for MW-01 weighing module it is necessary to put a jumper onto the module's main board (read section 11.2.2).***

- Make sure that communication between the PUE 7.1 and the MW-01 is established, and enter factory parameters submenu of the PUE 7.1 terminal.
- Go to a modified submenu of the weighing platform, list containing factory parameter values read from the MW-01 weighing module is displayed:

NAME	VALUES	DESCRIPTION
Metrology	**-**	**Metrology-related settings.**
Reading unit: range 1	0.001 ÷ 50	Rounding of the last digit and position of a decimal point for weighing range I.
Reading unit: range 2	0.001 ÷ 50	Rounding of the last digit and position of a decimal point for weighing range II.
Reading unit: range 3	0.001 ÷ 50	Rounding of the last digit and position of a decimal point for weighing range III.
Range	-	Weighing range of MW-01 module.
Range 2	-	Switching point of weighing range II.
Range 3	-	Switching point of weighing range III.
Adjustment weight mass	-	Adjustment weight mass.
Adjustment unit	g, kg, lb	Adjustment unit.
g-cor.	-	Gravitational correction value.
Autozero range	0.1 ÷ 5	Autozero range (in divisions).
Stability range	0.1 ÷ 5	Stability range in [d] units.
Stability time	0 ÷ 5	Stability time in [s].
Start mass control	0, 1, 2	Start mass control: 0 – disabled, 1 – range: from -5% to +15% of start mass, 2 – range: from -20% to +20% of start mass,

Digit marker	No, Yes	Enabling/disabling digit marker.
Converter speed	6.25, 12.5, 25, 50, 100, 200, 400, 800, 1600, 3200	Converter rate, set depending on the intended use of MW-01 module, used for dynamic scales (default value: **6.25**).
Adjustment	**-**	**Adjustment process.**
Start mass determination	-	Determining start mass of MW-01 module (the procedure is likewise to the one described in section 10.5).
Adjustment	-	MW-01 module adjustment (the procedure is likewise to the one described in section 10.5).
Start mass	-	Start mass value (in divisions).
Adjustment factor	-	Adjustment factor.
Linearity	**-**	**MW-01 module linearity correction (the procedure is likewise to the one described in section 10.6).**
Determine	-	Determining linearity correction points.
Delete	-	Deleting linearity correction.
Corrections	-	Entering corrections for determined linearity correction points.
Information	**-**	**Information (read-only).**
Serial number	-	Serial number of MW-01 module.
Weighing firmware version	-	Preview of MW-01 module's software version.
Divisions	-	Display of A/D converter divisions.
Miscellaneous	**-**	**Miscellaneous parameters.**
Pue7: Communication	-	Group of parameters for communication between PUE 7.1 terminal and MW-01 module (read section 11.2.1).
MW-01: Communication	-	Group of parameters enabling modification of transmission parameters for MW-01 module using PUE 7.1 terminal (read section 11.2.2).
Set default	**-**	**Restoring default settings of MW-01 module.**

- Set respective parameter values and return to weighing, saving changes.

11.3. Communication with HRP Weighing Module

Connection between PUE 7.1 terminal and HRP weighing module requires:

- establishing communication between the PUE 7.1 and the HRP module,
- editing and record of transmission parameters, and all factory parameters, to the HRP module memory, using the PUE 7.1 terminal.

11.3.1. Establishing Communication Between PUE 7.1 and HRP

Connection between PUE 7.1 terminal and HRP weighing module is carried out via **RS232**, **RS485** or **Ethernet** interface.

Procedure:

- Connect the HRP module to the PUE 7.1 terminal using a dedicated RS232, RS485 or Ethernet cable (list of connection cables is to be found in service manual of the HRP module).
- Switch the PUE 7.1 terminal on and enter global parameters submenu.
- Go to **<Weighing module type>** parameter and select the required weighing module number.
- Select **<HRP>** from the list. Message **<Restart to implement changes>** is displayed.
- Press button to confirm and return to weighing, saving changes, next restart the device.
- Enter factory parameters submenu of the PUE 7.1 terminal.
- Go to a modified submenu of the weighing platform.
- Enter **„Miscellaneous / PUE Y: Communication"** submenu, list of the following parameters is displayed:

NAME	DEFAULT	VALUES	DESCRIPTION
Port *	None	None, Tcp, RS232 (1), RS232 (2), RS485	Declaring port type of PUE 7.1 terminal for communication with HRP module.
Address	1	-	Declaring address of PUE 7.1 terminal for communication with HRP module (default address value in HRP module is **1**).
IP Address	0.0.0.0	-	Declaring IP address of PUE 7.1 terminal for communication with HRP module via Ethernet.
IP port	0	-	Declaring IP port of PUE 7.1 terminal for communication with HRP module via Ethernet.

)** *- In case of connection via RS232, the default value of baud rate for HRP weighing module is* ***57600bit/s*.*

	Declaring RS232, RS485 or TCP port of PUE 7.1 terminal for communication with HRP module requires respective transmission parameters to be set for these ports.
	HRP module's transmission parameters and transmission parameters of PUE 7.1 terminal's ports must be compatible. To set transmission parameters of PUE 7.1 terminal's ports go to „SETUP/ Communication" submenu.

- Set respective parameter values and return to weighing, saving changes.

11.3.2. Defining Transmission Parameters for HRP Weighing Module

	In order to define transmission parameters of HRP weighing module, press an internal SW1 switch on the main board of the module. Follow HRP service manual.

- Make sure that communication between the PUE 7.1 and the HRP is established, enter factory parameters submenu of the PUE 7.1 terminal.
- Go to a modified submenu of the weighing platform.
- Enter **„Miscellaneous / MW-MH: Communication"** submenu, list of the following parameters is displayed:

NAME	DEFAULT	VALUES	DESCRIPTION
RS232 (1)	57600	1200÷115200	Baud rate of RS232 (1) port of HRP weighing module.
RS485	57600	1200÷115200	Baud rate of RS485 port of HRP weighing module.
Address	1	-	Setting address of HRP module.
IP Address	192.168.0.2	-	Setting IP address of HRP module.
Subnet mask	255.255.255.0	-	Setting subnet mask of HRP module.
Default gateway	192.168.0.1	-	Setting default gateway of HRP module.
Port	4001	-	Setting local port of HRP module.
Timeout	60	0÷300s	Setting time interval after passage of which an inactive Ethernet connection gets broken.

- Set respective parameter values and return to weighing, saving changes.

	In order to save changes in HRP module memory it is necessary to restart PUE 7.1 terminal.

11.3.3. Defining Factory Settings for HRP Module

	In order to determine factory settings of HRP weighing module press an internal SW1 button on the main board of the module. Follow HRP service manual.

- Make sure that communication between the PUE 7.1 and the HRP is established, enter factory parameters submenu of the PUE 7.1 terminal.
- Go to a modified submenu of the weighing platform, list containing factory parameter values read from the HRP weighing module is displayed:

NAME	VALUES	DESCRIPTION
Metrology	**-**	**Metrology-related settings.**
Reading unit: range 1	0.001 ÷ 50	Rounding of the last digit and position of a decimal point for weighing range I.
Reading unit: range 2	0.001 ÷ 50	Rounding of the last digit and position of a decimal point for weighing range II.
Reading unit: range 3	0.001 ÷ 50	Rounding of the last digit and position of a decimal point for weighing range III.
Verification unit: range 1	0.001 ÷ 50	Verification unit of range I
Verification unit: range 2	0.001 ÷ 50	Verification unit of range II
Verification unit: range 3	0.001 ÷ 50	Verification unit of range 3
Range	-	Weighing range of HRP module.
Range 2	-	Switching point of weighing range II.
Range 3	-	Switching point of weighing range III.
Adjustment weight mass	-	Adjustment weight mass.
Adjustment unit	g, kg, lb	Adjustment unit.
g-cor.	-	Gravitational correction value.
Autozero range	0,1 ÷ 5	Autozero range (in divisions).
Stability range	0,1 ÷ 5	Stability range in [d] units.
Stability time	0 ÷ 5	Stability time in [s].
Start mass control	0, 1, 2	Start mass control: 0 – disabled, 1 – range: from -5% to +15% of start mass, 2 – range: from -20% to +20% of start mass,
Converter speed	6.25, 12.5, 25, 50, 100, 200, 400, 800, 1600, 3200	Converter rate, set depending on the intended use of HRP module.
Operating mode of A/D converter	Unipolar, bipolar	A/D converter operating mode.
Verified	✔ Yes, ✔ No	Declaring whether the scale is verified or not.
Adjustment	**-**	**Adjustment process.**
Start mass determination	-	Determining start mass of HRP module (procedure analogous to procedure described in section 10.5).
Adjustment	-	HRP module adjustment (the procedure is likewise to the one described in section 10.5).
Internal adjustment	-	Factory adjustment procedure carried out with the use of an internal adjustment weight.
Internal correction of temperature	-	Temperature compensation procedure carried out with the use of an internal adjustment weight.
External correction of temperature	-	Temperature compensation procedure carried out with the use of an external adjustment weight.

Start mass	-	Start mass value (in divisions).
Adjustment factor	-	Adjustment factor.
Zero temperature coefficient	0.000000000000	Zero change coefficient, coefficient value is conditioned by temperature change, and determined by the software after the end of compensation.
Sensitivity temperature coefficient	0.000000000000	Sensitivity change coefficient, coefficient value is conditioned by temperature change and determined by the software after the end of compensation.
Adjustment temperature	-	Value of divisions read from the temperature sensor during the adjustment.
Start mass determination range [%]	-	Start mass value range in percent.
Automatic adjustment	-	Submenu for setting the automatic internal adjustment.
Change position of internal adjustment weight	-	Parameter allowing to reposition the internal adjustment weight.
Linearity	**-**	**HRP module linearity correction (the procedure is likewise to the one described in section 10.6).**
Determine	-	Determining linearity correction points.
Delete	-	Deleting linearity correction.
Corrections	-	Entering corrections for determined linearity correction points.
Parabolic linearity		**Correction of parabolic linearity of HRP module**
Determine	-	Determining parabolic linearity correction points.
Type	Single w/o hysteresis; Single with hysteresis	Parabolic linearity type.
Coefficient A	-	Parabolic linearity coefficient A.
Coefficient B	-	Parabolic linearity coefficient B.
Multiplier	-	An experimentally determined value that approximates parabola for loads exceeding maximum mass of the weight used during the procedure.
Range	-	Mass range in divisions determining Max for to-be-determined parabola (scale calculation).
Information	**-**	**Information (read-only).**
Serial number	-	HRP module serial number.
Weighing firmware version	-	Preview of HRP module's software version.
Divisions	-	Display of A/D converter divisions.

Temperature divisions	-	Displaying temperature divisions of the converter.
Temperature °C		Temperature value read from the internal sensor installed in the HRP module, given in [°C].
Start mass	-	Start mass value (in divisions).
Adjustment factor	-	Adjustment factor.
g-cor.	-	Gravitational correction value.
Zero temperature coefficient	0.000000000000	Zero change coefficient, coefficient value is conditioned by temperature change, and determined by the software after the end of compensation.
Sensitivity temperature coefficient	0.000000000000	Sensitivity change coefficient, coefficient value is conditioned by temperature change and determined by the software after the end of compensation.
Adjustment temperature	-	Value of divisions read from the temperature sensor during the adjustment.
Adjustment quantity	-	Quantity of carried out adjustments.
Definable filter	**-**	**Activating the filter and defining filter dynamics.**
Update	**-**	**Software update.**
Miscellaneous	**-**	**Miscellaneous parameters.**
Scale type	heavyweight HRP, lightweight HRP, MW-MH, MPSH, MASH	Scale type / HRP weighing module type.
Import		Parameter import.
Export		Parameter export.
Pue Y: Communication	-	Group of parameters for communication between PUE 7.1 terminal and HRP module (read section 11.3.1).
MW-MH: Communication	-	Group of parameters enabling modification of transmission parameters for HRP module using PUE 7.1 terminal (read section 11.3.2).
Set default	**-**	**Restoring default HRP module settings.**

- Set respective parameter values and return to weighing, saving changes.

11.3.4. Paring of HRP Platform with PUE 7.1 Terminal

Function requesting the necessity to pair HRP platform with PUE 7.1 terminal.

Procedure:

- Enter **<Info / Paired modules / Pair modules>** submenu.
- The HRP platform is automatically paired with the PUE 7.1 terminal, message **<Modules paired>** is displayed.
- Press button to confirm. Serial number of the paired HRP weighing platform is displayed.

	<Pair modules> function is available upon activation of <Request modules pairing> parameter in <Global> submenu (read section 10.2).

12. DIAGRAMS OF CONNECTION CABLES

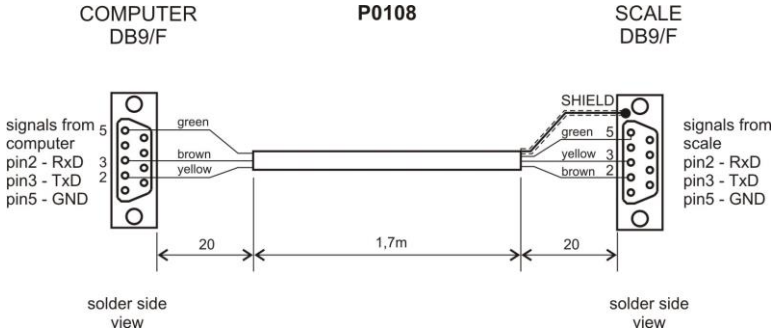

Scale - computer cable (RS232)

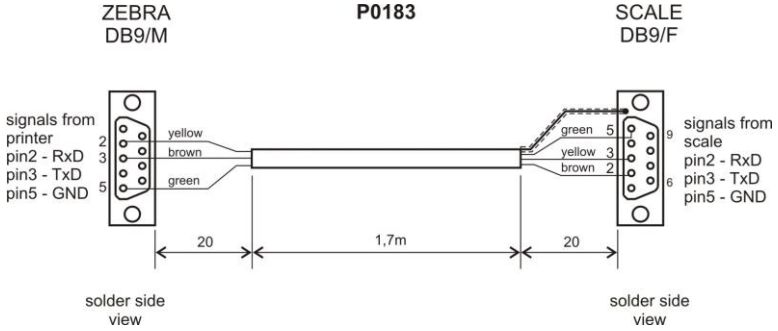

Scale - printer cable (ZEBRA)

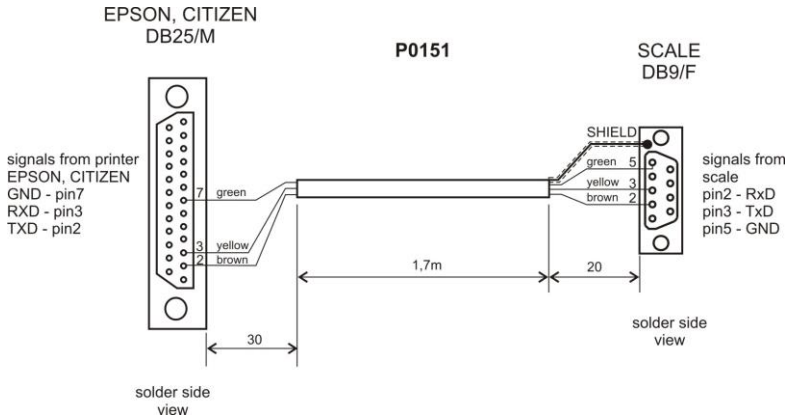

Scale - printer cable (CITIZEN, EPSON)

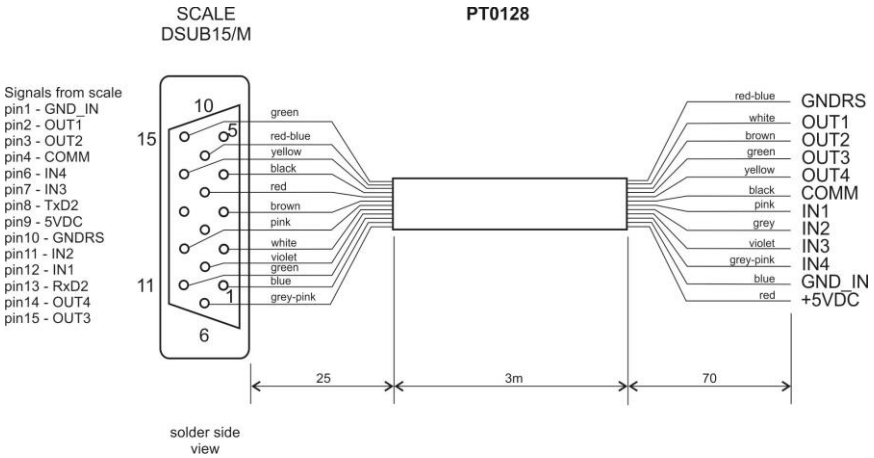

I/O cable

⚠	***„Scale-Ethernet" cable is a standard network cable terminated with RJ45 connectors on both ends.***