USER GUIDE

PUE 5.19C

Radwag

Distributed by AKRIBIS

User manual

ITKU-84-04-04-24-EN

Weighing Terminal

PUE 5

radwag.com

Scan the QR code to view additional scientific material that may be of interest to you.
There you will find more useful information in an accessible format!

AKRIBIS www.akribis.info contacto@akribis.info

APRIL 2024

PRECAUTIONS

Prior to installation, use or maintenance activities, carefully read this user manual. Use the PUE 5 Indicator only as intended.

	Prior to the first use, carefully read this user manual. Use the device only as intended.
	Protect the indicator against considerable temperature variation, solar and UV radiation, substances causing chemical reactions.
	Do not operate the touch panel using sharp-edged tools (knife, screwdriver, etc.).
	The indicator must not be operated in hazardous areas endangered with explosion of gases, and in dusty environments.
	If the platform is to be operated in a place characterized with conditions that are difficult due to electrostatics (e.g. printing house, packing centre, etc.), you must connect it to the earth wire. To enable this, the device features functional earthing terminal, marked with ⏚ symbol.
	In case of damage, immediately unplug the device from the mains.
	Indicators to be decommissioned must be decommissioned in accordance with valid legal regulations.
	Wi-Fi® is a registered trademark of Wi-Fi Alliance. The trademark used in this document serves informative purposes, it does not stand for compliance of any products with products certified by Wi-Fi® Alliance organisation.

Contents

1. INTENDED USE 5
2. WARRANTY CONDITIONS 5
3. MAINTENANCE 6
3.1. Cleaning Stainless Steel Components 6
3.2. Cleaning ABS Components 6
4. MECHANICAL DESIGN 6
4.1. Dimensions 6
4.2. Connectors 8
4.3. Connectors topology 9
4.4. Inputs / Outputs 9
4.4.1. Connectors topology 9
4.4.2. Technical Specifications 10
4.4.3. I/O Schematic Diagrams 10
4.5. Technical Specifications 11
5. INDICATOR INSTALLATION 12
5.1. Unpacking and Installation 12
5.2. Start-Up 12
6. „PUE 5 CORE" SOFTWARE 12
6.1. Program Start-up 13
6.2. Main Window 13
6.3. Navigation in the Menu 14
6.3.1. Scale Keyboard 14
6.3.2. Return to Weighing Function 14
7. INSTALLER INSTRUCTION 15
7.1. MW-04 Mass Converter 15
7.2. A/D Converter 16
7.3. Connection of Weighing Platforms 16
7.3.1. Connection of the 6-wire Load Cell 16
7.3.2. Connection of the 4-wire Load Cell 17
7.3.3. Principles for Connecting Load Cell Shield 17
8. FACTORY PARAMETERS 18
8.1. Access to Factory Parameters 18
8.2. List of Global Parameters 19
8.3. List of Factory Parameters 20
8.4. Factory Adjustment 23
8.4.1. External Factory Adjustment 23
8.4.2. Determination of Factory Start Mass 23
8.5. Linearity 24
8.5.1. Linearity Determination 24
8.5.2. Corrections 25
8.5.3. Deleting Linearity 25
8.6. Gravitational Correction 25
9. DIAGRAMS OF CONNECTION CABLES 26
10. ERROR MESSAGES 28

1. INTENDED USE

PUE 5.15, PUE 5.19 indicators are designed for scales that work with strain gauge load cells. The indicators' housing is made of stainless steel. PUE 5.15, PUE 5.19 are intended to be used in industry. A big colorful screen of the indicator with a touch panel makes the software operation much more comfortable since there is no need to use a keyboard.

PUE 5 indicator is a genuine device that consists of two units: the computer and the weighing module, placed in one housing. Both of these units are connected via an internal interface.

The possibility of using common operating systems allows external companies to create its software or to use the existing one. Such common devices as PC computers can be used with the terminal, which is a great advantage while creating a network. Individual workstation with the PC device is as well possible.

2. WARRANTY CONDITIONS

A. RADWAG feels obliged to repair or exchange all elements that appear to be faulty by production or by construction.
B. Defining defects of unclear origin and means of their elimination can only be realized with assistance of the manufacturer and user representatives.
C. RADWAG does not bear any responsibility for damage or losses resulting from unauthorized or inadequate performing of production or service processes.
D. The warranty does not cover:
   - mechanical damage caused by product exploitation other than intended, damage of thermal and chemical origin, damage caused by lightning, overvoltage in the power grid or other random event,
   - inappropriate cleaning habits.
E. Loss of warranty takes place if:
   - a repair is carried out outside RADWAG authorized service point,
   - service claims intrusion into mechanical or electronic construction by unauthorized people,
   - other than original version of the operating system is installed,
   - the scale does not bear security seal stickers.
F. For detailed warranty conditions read the service card.
G. Contact with the central authorized service: +48 (48) 386 63 30.

3. MAINTENANCE

3.1. Cleaning Stainless Steel Components

Avoid using cleansers containing any corrosive chemicals, e.g. bleach (with chlorine). Do not use cleansers containing abrasive substances. Always remove the dirt using microfiber cloth to avoid damage of protective coating.

Daily cleaning routine (removal of small stains):

1. Remove the dirt using cloth dipped in warm water.
2. For best results, add a little bit of dishwashing detergent.

3.2. Cleaning ABS Components

To clean dry surfaces and avoid smudging, use clean non-colouring cloths made of cellulose or cotton. You can use a solution of water and detergent (soap, dishwashing detergent, glass cleaner). Gently rub the cleaned surface and let it dry. Repeat the cleaning process if necessary.

In the case of hard to remove contamination, e.g. residues of adhesive, rubber, resin, polyurethane foam etc., you can use a special cleaning agents based on a mixture of aliphatic hydrocarbons that do not dissolve plastics. Before using the cleanser for all surfaces we recommend carrying out tests. Do not use cleansers containing abrasive substances.

4. MECHANICAL DESIGN

4.1. Dimensions

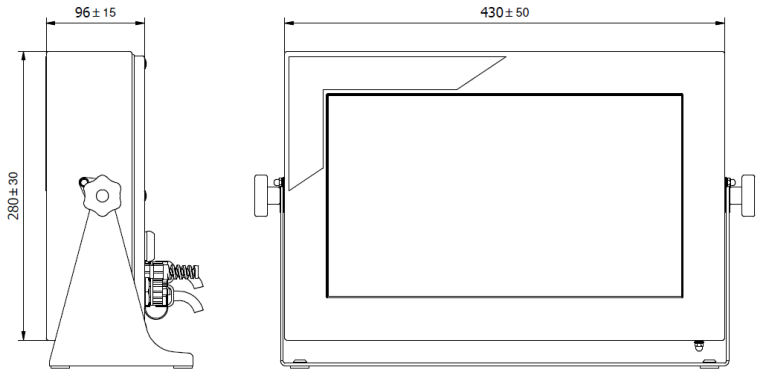

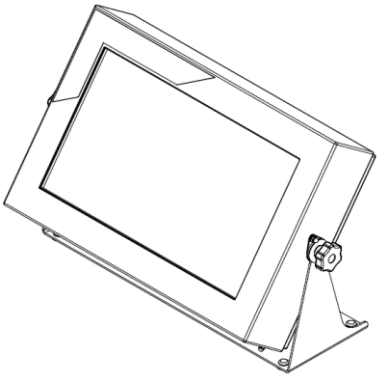

PUE 5.15 indicator dimensions

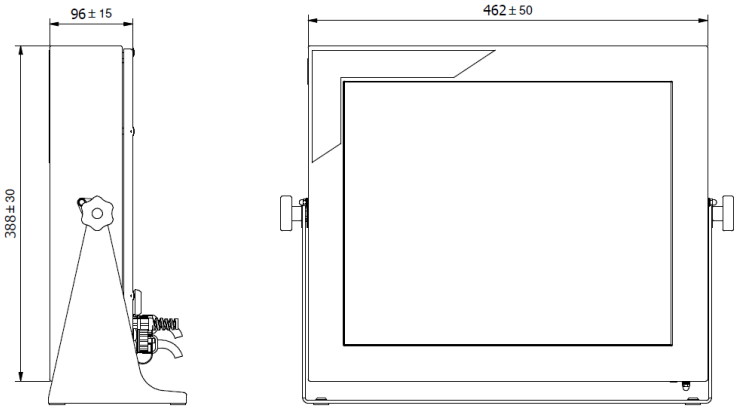

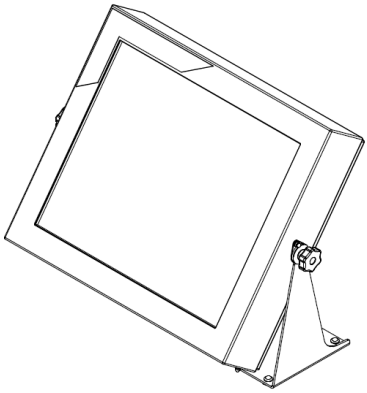

PUE 5.19 indicator dimensions

4.2. Connectors

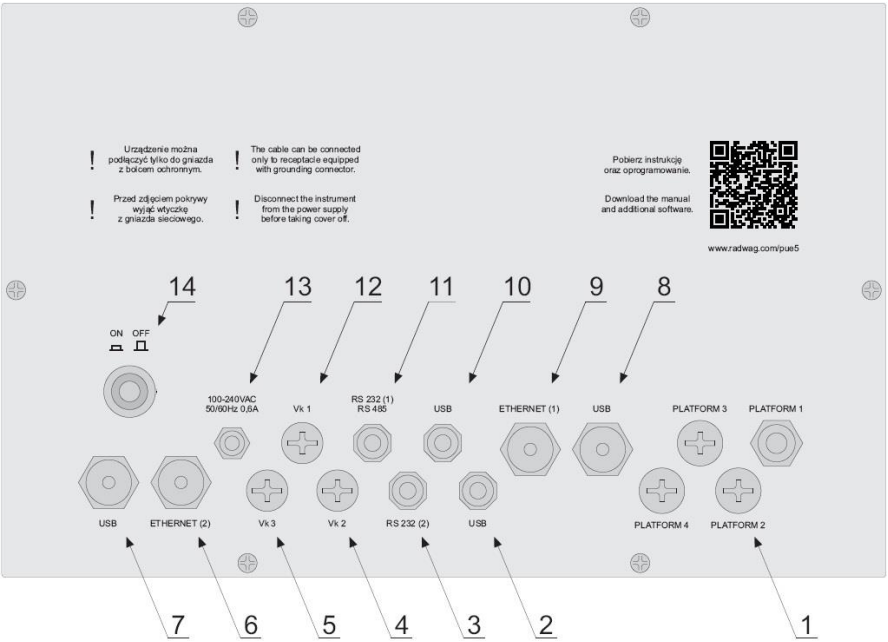

Back PUE 5.15, PUE 5.19 board view

1	Cable glands (x4pcs.) for load cell cable
2	USB M12 4P connector
3	RS232 (2) connector
4	Plug (optionally 4IN, RS232 (1), RS485)
5	Plug (optionally RS232 (3))
6	Ethernet (2) RJ45 connector
7	USB panel connector
8	USB panel connector
9	RJ45 Ethernet (1) connector
10	USB M12 4P connector
11	RS232 (1), RS485 connector (optionally RS232 (1))
12	Plug (optionally 4OUT)
13	Power cord gland
14	ON/OFF switch-key

Number of particular connectors may depend on weighing terminal current configuration.

4.3. Connectors topology

RS232, RS485	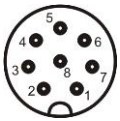	Pin1 – B (RS485) Pin2 – RxD Pin3 – TxD Pin4 – A (RS485) Pin5 – GND Pin6 - +5VDC Pin7 – GND Pin8 – 12VDC
RS232	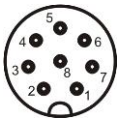	Pin1 – NC Pin2 – RxD Pin3 – TxD Pin4 – NC Pin5 – GND Pin6 - +5VDC
USB	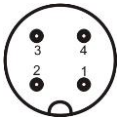	Pin1 – Vcc Pin2 – D- Pin3 – D+ Pin4 – GND
Ethernet	RJ45	Standard RJ45
USB panel	USB A	Standard USB A

4.4. Inputs / Outputs

Optional design

The PUE 5 indicator is optionally equipped with 4 optoisolated inputs and 4 semiconductor outputs (solid-state relays).

4.4.1. Connectors topology

4OUTPUTS	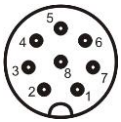	Pin1 – OUT1 Pin2 – OUT2 Pin3 – OUT3 Pin4 – OUT4 Pin5 – COM Pin6 – 24VDC Pin7 – GND Pin8 – NC
4INPUTS	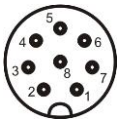	Pin1 – IN1 Pin2 – IN2 Pin3 – IN3 Pin4 – IN4 Pin5 – COM Pin6 – 24VDC Pin7 – GND Pin8 – NC

4.4.2. Technical Specifications

Output parameters	
Output quantity	4
Output type	Solid-state relay
Cable cross-section	0.14 - 0.5 mm^2
Maximum output current	0.5 A DC
Maximum output voltage	30 VDC, AC

Input parameters	
Input quantity	4
Input type	Optoisolated
Cable cross-section	0.14 - 0.5 mm^2
Voltage range	5 - 24 VDC

4.4.3. I/O Schematic Diagrams

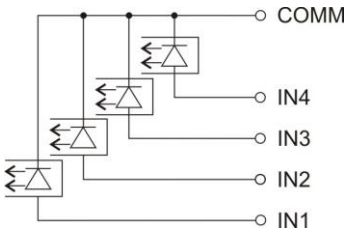	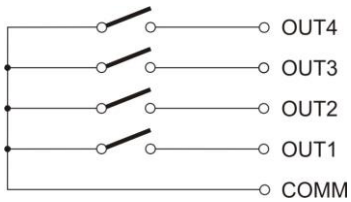
4 inputs	*4 outputs*

4.5. Technical Specifications

	PUE 5.15	PUE 5.19
Housing	stainless steel	
IP rating	IP67	
Display	LCD 15,6'' (1366x768)	LCD 19'' (1280x1024)
Touch screen	IR	
Power supply	100 ÷ 240VAC 50 ÷ 60Hz	
Maximum power consumption	75W	
Operation temperature	0 ÷ 40C	
Storage temperature	-20C ÷ 60C	
Max. quantity of A/D converter divisions	8388608	
OIML class	III	
Verification units quantity	6000	
Maximum signal gain	19,5mV	
Maximum voltage per verification unit	3,25uV	
Minimum voltage per verification unit	0,4uV	
Minimum impedance of load cell	80	
Maximum impedance of load cell	1200	
Load cell excitation voltage	5V	
Connection of load cells	4 or 6 wire	
Processor *	Intel® Celeron® J6412	
Graphics card *	Intel® UHD Graphics for 10th Gen Intel® Processors	
RAM *	KVR32S22S8: 16GB	
Data memory *	DEM28-A28M41BC1DC M.2 2280-D2-M SATA SSD - 128GB	

Standard version	
Ethernet	2x10/100/1000 Mbit (2xRJ45, hermetic **)
Serial interfaces	2xRS232, 1xRS485 (2xM12 8P **)
USB interface	4xUSB 2.0 (2xUSB A **, 2xM12 4P **)
Operating system	Microsoft Windows 11

Optional version	
Additional weighing platform module	3 additional platform maximally (metrological parameters compliant with the mother platform)
Touch screen	Capacitive, Resistive
In/Out	4IN/4OUT (2 x M12 8P connectors **)
In/Out	4IN/4OUT (2 x cables fed through glands)

***)** - or compatible.
****)** - Tightness provided with dust cover or cable mount installed.

⚠	***Components of manufacturers other than specified above are allowed providing they feature comparable functional parameters. Need for substitution of particular component manufacturer may be an effect of technological progress or general market trends.***

5. INDICATOR INSTALLATION

5.1. Unpacking and Installation

A. Take the indicator out of the packaging.
B. Connect the indicator to a weighing platform, next place the weighing device on a flat and even surface. Keep it away from any sources of heat.
C. To level the weighing instrument turn its feet. Keep turning the feet until the air bubble takes central position:

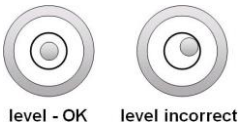

5.2. Start-Up

- Turn the power on, do it by pressing **ON/OFF** switch located at the back of the indicator housing. Operating system loading begins.
- After completing the startup procedure, the device is ready for operation.

6. „PUE 5 CORE" SOFTWARE

"PUE 5 Core" is a program designed to enable control of MW-04 mass converter. The program allows you to calibrate the mass converter, read mass, tare, zero, set filters, etc.

6.1. Program Start-up

The program can be launched using the **<PUE 5 Core>** shortcut on the desktop. After starting the program, the main program window will be displayed.

6.2. Main Window

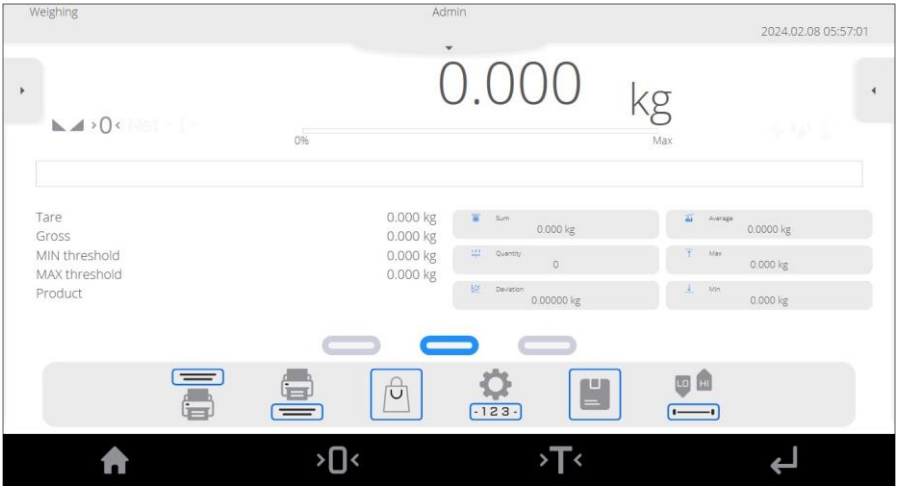

The home page can be divided into 5 fields:

- The upper part of the screen shows information on current working mode, logged user, date, time, active connection to PC.

- The weighing result and scale leveling box is displayed below.

- Below is a box containing additional related information with currently performed activities.

- The on-screen functional buttons are showed below:

- At the bottom of the screen you can see permanent functional buttons:

6.3. Navigation in the Menu

Navigation in the menu is intuitive and user-friendly. Thanks to the touch screen display, it is very easy to use the program. Press the screen button or field in the screen to activate the assigned operate or function.

6.3.1. Scale Keyboard

	Press to enter balance menu. Press to go to the home screen.
	Press to zero the scale.
	Press to tare the scale.
	Press to send the weighing result to a printer or computer.
	Press to confirm changes.
	Press to abort modifications and go back.
	Press to go back.
	Press to deselect all marked information.
	Press to select all marked information.
	Press to restore default settings.

6.3.2. Return to Weighing Function

Any changes made in the scale memory are automatically recorded in the menu after going back to the home screen.

Procedure:

- Press button a couple of times to make the scale return to home screen.
- Press in the lower bar to return to home page immediately.

7. INSTALLER INSTRUCTION

The PUE 5 indicator can be a base component of a load cell scale.

7.1. MW-04 Mass Converter

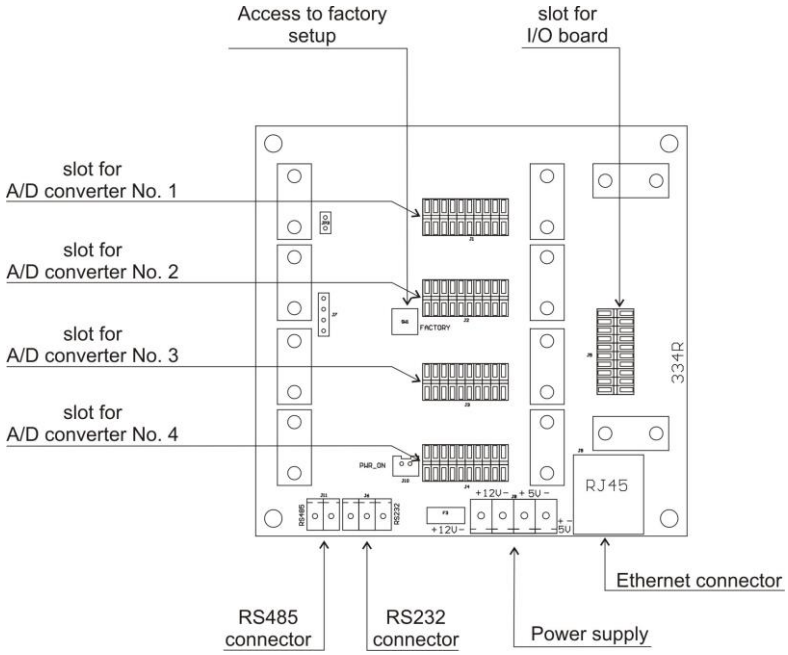

MW-04 Mass Converter

MW-04 Mass Converter (334Rxxxx) functions as a base component comprising A/D converter boards and 4IN/4OUT board. The controller features also button enabling access to service parameters. Mass Converter are protected against intrusion by means of a metal sealed shield. Communication with PC module is established via RS232 (COM1).

7.2. A/D Converter

A/D converter board is mounted on the MW-04 mass converter. It is possible to install 4 A/D converters maximally. Weighing parameters for all converters are identical.

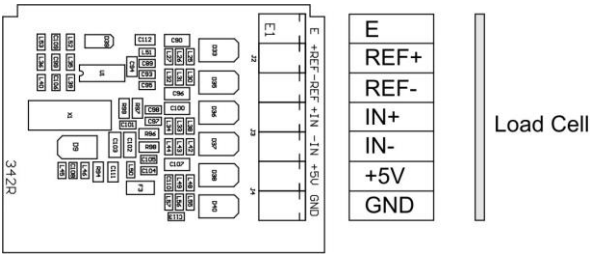

A/D converter board

7.3. Connection of Weighing Platforms

7.3.1. Connection of the 6-wire Load Cell

Connection for load cells featuring 6-lead cable shall be carried out in accordance with diagram presented in figure below:

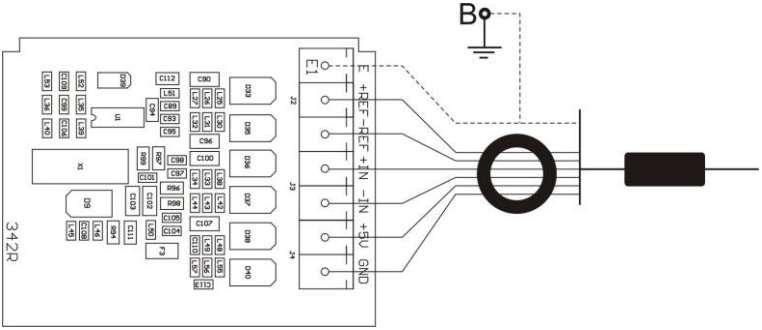

Connection of the 6-wire Load Cell

Radwag A/C transducer board	Signals from load cell	NOTES
E	SHIELD	Read point 7.1.3
REF+	SENSE +	
REF-	SENSE -	
IN+	OUTPUT+	
IN-	OUTPUT-	
+5V	INPUT+	
AGND	INPUT-	

7.3.2. Connection of the 4-wire Load Cell

Connection for load cells featuring 4-lead cable shall be carried out in accordance with diagram presented in figure below:

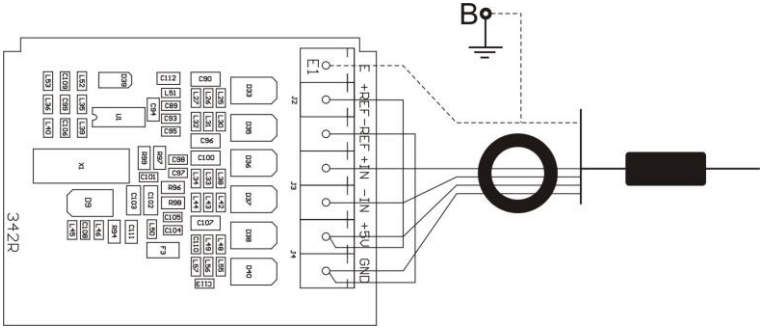

Connection of the 4-wire load cell

Radwag A/C transducer board	Signals from load cell	NOTES
E	SHIELD	Read point 7.1.3
REF+	-	Connect to +5V
REF-	-	Connect to AGND
IN+	OUTPUT+	
IN-	OUTPUT-	
+5V	INPUT+	
AGND	INPUT-	

Using sections of LiY 0,34mm^2 cable, provide connection between REF+ and +5V, and between REF- and AGND.

7.3.3. Principles for Connecting Load Cell Shield

	A weighing platform with fixed galvanic connection of the shield to the load cell body	A weighing platform without galvanic connection of the shield to the load cell body
Scale with a terminal featuring metal housing, connected to the platform via a signal cable	**POINT B**	**POINT B**
Compact mechanical design (e.g. scale with a terminal mounted on a pillar), terminal housed in a metal casing.	**POINT B**	**E**

Point B – threaded pin electrically connected with a weighing indicator housing.
E – solder point on an A/D converter board.

8. FACTORY PARAMETERS

When you activate the factory settings mode in the scale, you can change both user parameters and all factory parameters. This means that you can define parameters of the entire scale.

8.1. Access to Factory Parameters

The factory button on MW-04 module is accessible after dismounting a covering shield. To access the button one need to:

- Remove a protection sticker covering a screw,
- Unscrew the uncovered screw,
- Lift up the shield carefully.

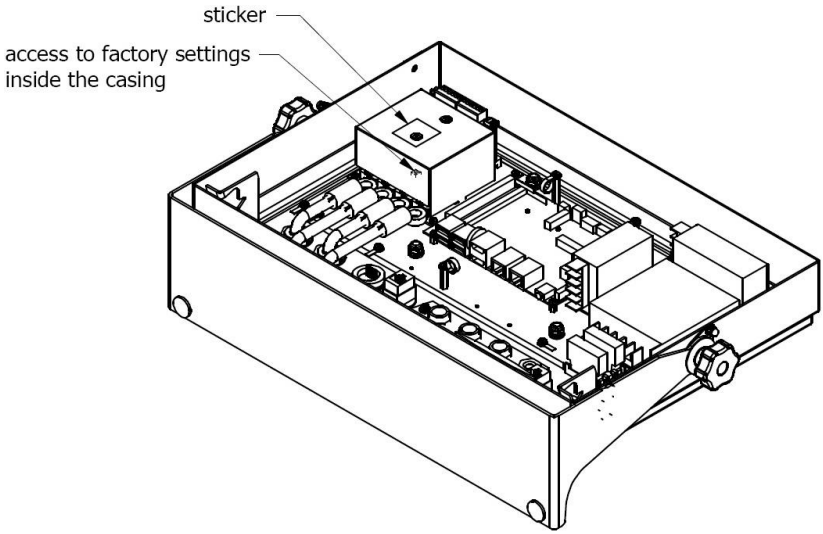

Access to factory settings inside the casing

- Press **ON/OFF** switch to power the indicator, the switch is to be found at the back of the housing, wait for the operating system to be loaded.
- After completing the startup procedure, run the **"PUE 5 Core"** program using the **<PUE 5 Core>** shortcut on the desktop.
- Press and hold the internal **SW1** button located on the MW-04 mass converter board for approximately 3 seconds.

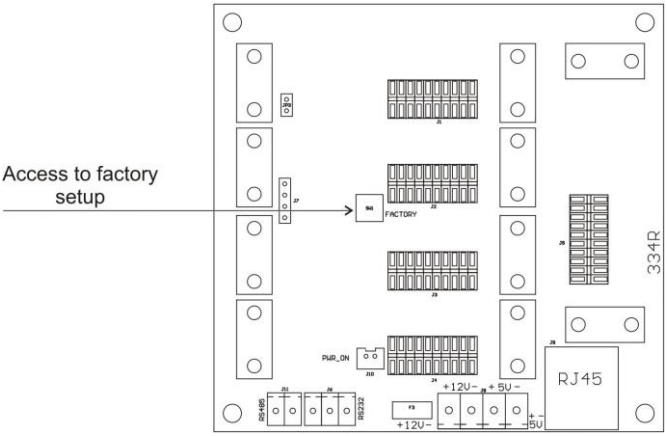

Factory parameters access button

- Use to enter main menu with two submenus displayed: **<Global>** and **<Factory>**.

8.2. List of Global Parameters

Menu level		NAME	RANGE	DESCRIPTION
		Balance defining	-	Function for quick defining of the scale with automatic setting of key metrological parameters.
		Weighing record storage period [days]	-	Protection against deletion of data from the base of weighing, controls and average tares in the form of weighing storage period in days.
		Quantity stored weighing records	-	Number of stored weighing records.
		Customer	Disabled (Radwag) Empty (white) VWR Baykon BOECO Germany Cole-Palmer Fisher Scientific Schuler Scientyfic	For the setting: <Disabled (Radwag)>, when the program is being launched, Radwag logo is displayed. For the setting: <Empty (white)>, during start-up, no company logo is displayed and white background is visible. For other settings: the specific company's logo is displayed during start-up.
		Working mode settings	**-**	**Menu with additional working modes settings.**
		Industrial scale	No, Yes	Activation of the industrial version of scale software. Default value: **Yes** (Read-only).
		Available working modes	-	Activation/deactivation of working modes availability.

		Parameter management	**-**	**Menu with import, export and backup copy settings.**
		Import	-	Importing settings from pendrive memory into scale.
		Export	-	Exporting settings to pendrive memory.
		Backup copy	-	Menu with backup copy load/record functions of global and factory parameters.
		Set default	-	Restoring default settings.
		Advanced settings	**-**	**Menu with advanced settings.**
		NTEP	No, Yes	Activation/deactivation of changes to „Counting parts" working mode for verified scales (American market).
		Rounded tare mode	No, Yes	Activation of rounded tare mode.
		Additional M-PCIe Serial port module available	No, Yes	Activation of additional serial port.

8.3. List of Factory Parameters

Menu level				NAME	RANGE	DESCRIPTION
				Platform count	**1, 2, 3, 4**	**Number of platforms declared.**
				Platform 1	**-**	**Menu with platform 1 parameters.**
				Metrology	**-**	**Metrological settings.**
				Reading unit range 1	0.001 ÷ 50	Rounding of a last digit and position of a decimal point for the 1st range.
				Reading unit range 2	0,001 ÷ 50	Rounding of a last digit and position of a decimal point for the 2nd range.
				Reading unit range 3	0,001 ÷ 50	Rounding of a last digit and position of a decimal point for the 3rd range.
				Range	-	Range of weighing + exceeded limit.
				Range 2	-	II range switching point.
				Range 3	-	III range switching point.
				External Adjustment weight	-	Adjustment weight's nominal mass.
				Adjustment unit	g, kg, lb	Adjustment unit.
				Gcor	0.9 ÷ 1.1	Gravity correction factor (see 8.5 of the manual).
				Autozero range	0.1, 0.2, 0.25, 0.5, 1, 2, 2.5, 5.	Autozero range (in divisions).
				Stability range	0.1, 0.2, 0.25, 0.5, 1, 2, 2.5, 5.	Stability range in [d].

				Stability time	0, 0.2, 0.4, 0.6, 0.8, 1, 2, 3, 4, 5, 10, 15, 20.	Stability time in [s].
				Start mass control	0, 1, 2	Start mass control: **0** – off, **1** - range: -5% to +15% of start mass, **2** - range ±20% of start mass.
				Last digit marker	Yes, No	Enabling/disabling digit marker.
				Converter speed	10, 80	Converter speed set in relation to module intended use.
				Verified	No, Yes	Declaring whether the scale is verified or not.
				Adjustment	**-**	**Factory adjustment menu (see 8.3 of the manual).**
				Determination of factory start mass	-	Determination of start mass.
				Adjustment	-	Scale adjustment process.
				Start mass	-	Current start mass in divisions.
				Adjustment factor	-	Current adjustment factor.
				Weighing	**-**	**Parameters related to stable result and zeroing function.**
				Median filter	Yes, No	Enter this parameter to eliminate short impulse interferences (e.g. mechanical shocks).
				Filter*	None, Very fast, Fast, Normal, Slow	Enter this parameter to adjust your weighing device to ambient conditions.
				Autozero*	Yes, No	Automatic control and correction of zero value: **Yes** – autozero enabled; **No** – autozero disabled.
				Linearity	**-**	**Linearity correction (see 8.4 of the manual).**
				Set	-	Determination of linearity correction points.
				Delete	-	Deleting linearity correction.
				Corrections	-	Inserting corrections for linearity correction points.
				Information		**Information (read-only).**
				Serial number	-	Scale serial number.
				Weighing firmware version	-	Version of weighing module software.
				Divisions	-	Display of converter divisions.
				Parameters	**-**	**Menu with import, export and communication settings.**

				Import	-	Import of platform 1 parameter settings from pendrive mass memory to the scale.
				Export	-	Export of platform 1 parameter settings to pendrive mass storage.
				MW-04: Communication	-	Communication parameters of the indicator with the MW-04 mass converter.
				Address	1	Address of the MW-04 mass converter.
				Serial Port 1	1200 ÷ 115200	Communication port speed.
				RS485	1200 ÷ 115200	Speed of the RS485 communication port.
				MW-04: Test Inputs/ Outputs	-	I/O Diagnostic Menu.
				Clear all settings	-	Restoring the default settings of the <Parameters> menu.
				Weighing module type	**MW-04, HRP**	**Type of connected weighing module: HRP - electromagnetic module; MW-04 - load cell module.**
				Port	**Serial Port 3 Serial Port 4**	**Communication port of the main board with the weighing module. Default value: Serial Port 4.**
				Address	**-**	**Address assigned to the weighing module. Default value: 255.**
				Platform overview	**-**	**Name of device and metrological information displayed in top bar.**
				Platform overview [ct]	**-**	**Name of device and metrological information [ct] displayed in top bar.**
				Platform 2	**-**	**Menu with platform 2 parameters (analogical to platform 1).**
				Platform 3	**-**	**Menu with platform 3 parameters (analogical to platform 1).**
				Platform 4	**-**	**Menu with platform 4 parameters (analogical to platform 1).**

***)** - Diagnostic parameters that reflect operator parameters from **<Readout>** submenu. Changing values of these parameters does not cause **<Readout>** parameters values to be overwritten.

⚠	***The aforesaid list of factory parameters assumes operation of 1 weighing platform. In case of more platforms, enter <Factory> menu to see a list of declared platforms. The list of parameters for each platform is analogical to the one described in the aforesaid list.***

8.4. Factory Adjustment

8.4.1. External Factory Adjustment

- Enter **<Factory>** menu and select platform number.
- Go to **<Adjustment>** submenu and enter **<Adjustment>** function. The message: **<Adjustment: Unload the weighing pan>** will be displayed.
- Unload weighing pan and press to confirm the message.
- While determining the start mass, the following message will be displayed: **<Adjustment: Factory Start Mass Determination>**.
- When the start mass determination procedure is finished, the scale display will show the following message: **<Adjustment: Load xxx>** (where: xxx – adjustment mass).
- Load the weighing pan and press to confirm. The following message will be displayed: **<Adjustment: Adjustment>**.
- Once the process is completed, the following message will appear: **<Adjustment: Unload the weighing pan>**.
- Unload weighing pan and press to confirm the message.
- You will see the following message: **<Adjustment: Completed>**.
- Press to confirm the message. The scale will return to **<Adjustment>** submenu.

⚠	***External factory adjustment of the additional platform is analogical to the above-stated description.***

8.4.2. Determination of Factory Start Mass

- Enter **<Factory>** menu and select platform number.
- Go to **<Adjustment>** submenu and enter **<Factory start mass determination>** function. The following message will be displayed: **<Factory start mass determination: Unload the weighing pan>**.
- Unload weighing pan and press to confirm. The following message will be displayed: **<Factory start mass determination: Factory start mass determination>**.
- When the process is finished, the following message will appear: **<Factory start mass determination: Completed>**.
- Press to confirm the message. The scale will return to **<Adjustment>** submenu.

⚠	***Determination of factory start mass of the additional platform is analogical to the above-stated description.***

8.5. Linearity

8.5.1. Linearity Determination

Determining mass for each step of the linearity and corrections via scale software.

Procedure:

- Enter **<Factory>** menu and select platform number.
- Enter **<Linearity / Determine>** submenu. **<Mass>** edit box and an on-screen keyboard are displayed.
- Unload the platform.
- Enter required mass (the first linearity correction point) and press button. **<Put xxx>** message (where: xxx – entered mass value) is displayed.
- Load the weighing pan with the required mass value of the first linearity correction point, wait for stabilization and press button.
- **<Mass>** edit box with an on-screen keyboard is displayed. Determine next linearity correction point.
- Proceed likewise for second linearity correction point. Scale software enables determining max 6 linearity correction points.
- Upon confirmation of the last (sixth) linearity correction point, **<Linearity>** submenu is displayed automatically.
- In the case of determining the quantity of linearity correction points lower than the maximum, upon **<Mass>** edit box displaying (determination of the next linearity correction point) press button.
- **<Linearity>** menu is displayed automatically.
- Return to weighing.

⚠	***In a case when zero value of the linearity correction point is confirmed by pressing button the following message is displayed: <Value too low>.***

8.5.2. Corrections

Editing corrections for linearity correction points.

Procedure:

- Enter **<Factory>** menu and select platform number.
- Enter **<Linearity / Corrections>** submenu. A list of determined linearity correction points is displayed. The list contains previously determined mass values for each correction point and deviations determined in reading units.
- Upon selecting required entry **<Mass>** edit box and an on-screen keyboard are displayed. The edit box contains previously declared mass value.
- Load the weighing pan with required mass value and press button.
- **<Correction>** edit box with an on-screen keyboard is displayed automatically.
- If upon stabilization of the result displayed mass value differs from the declared mass, use the on-screen keyboard to insert required correction.
- If there is a need to enter negative value, write „-" sign before the number.
- Press button to confirm, list of linearity correction points is displayed again.
- Correcting the linearity correction point no. 2 is analogous.
- Return to weighing.

8.5.3. Deleting Linearity

- Enter **<Factory>** menu and select platform number.
- Enter **<Linearity / Delete>** submenu. **<Delete?>** message is displayed.
- Press key to confirm.
- Return to weighing.

8.6. Gravitational Correction

The gravitational correction function eliminates changes of gravity forces at various latitudes. It allows proper adjustment of the scale away from the further use spot. The gravitational correction must be entered on the basis of tables provided by „RADWAG Wagi Elektroniczne" or through calculation as per the following equation:

$$Gcor = \frac{g_{uzyt.}}{g_{kal.}}$$

The permissible range, approved by the program, of correction values is as follows: 0,90000 ÷ 1,99999.

⚠	***If the scale is adjusted in the use area, <Gcor> parameter must be set as 1.00000. In case the scale is adjusted away from the further use spot, always enter the gravitational correction.***

9. DIAGRAMS OF CONNECTION CABLES

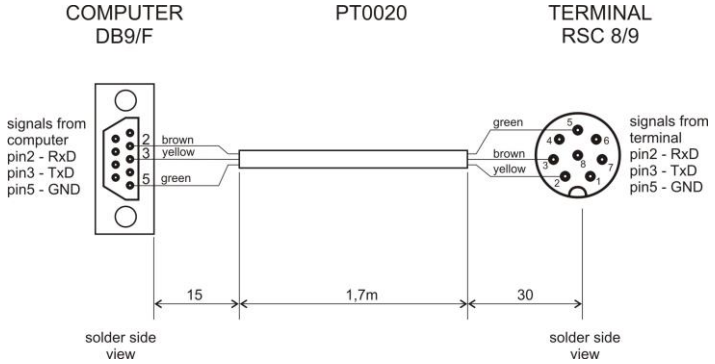

Indicator - computer cable

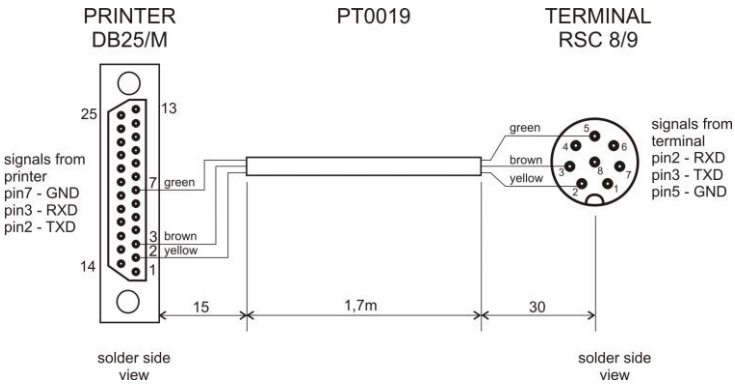

Indicator - printer cable (EPSON)

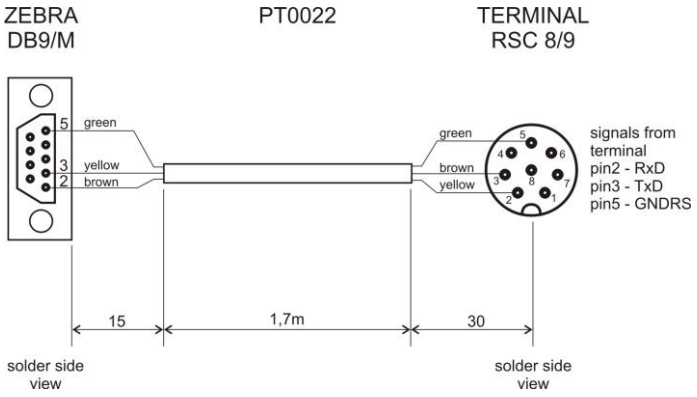

Indicator - printer cable (ZEBRA)

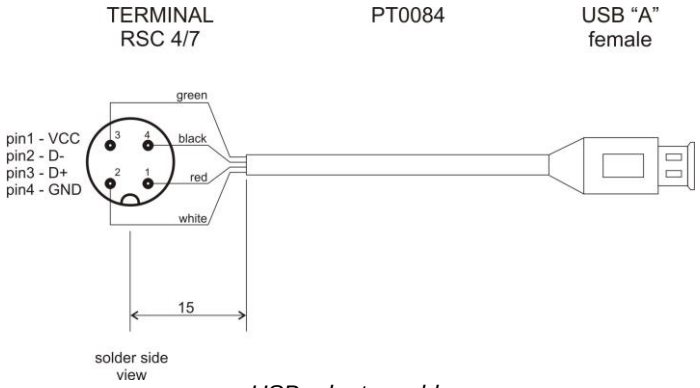

USB adapter cable

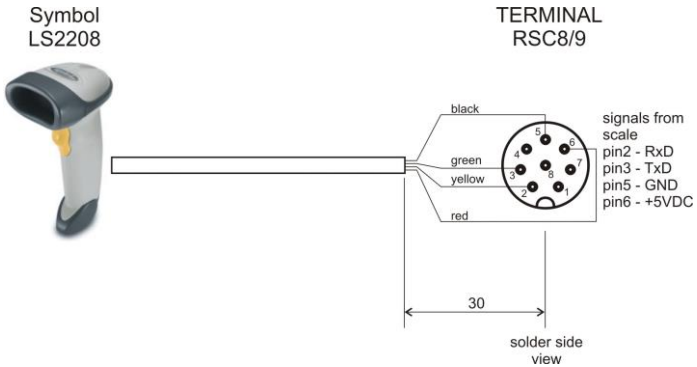

Indicator – barcode scanner cable (LS2208)

	„Scale-Ethernet" cable is a standard network cable terminated with RJ45 connectors on both ends.

10. ERROR MESSAGES

Max weighing threshold exceeded
Unload the weighing pan

Min weighing threshold exceeded
Install weighing pan

Zeroing out of range
Press tarring button or restart the balance

Display capacity out of range
Unload the weighing pan

Tarring out of range
Press zeroing button or restart the balance

Start mass out of range
Install weighing pan

Zeroing/tarring time out of range
Weighing indication unstable

AKRIBIS www.akribis.info contacto@akribis.info