USER GUIDE

PTB330

Vaisala · Authorized Partner

Distributed by AKRIBIS

M210855EN-G

User Guide

Vaisala BAROCAP® Digital Barometer

PTB330

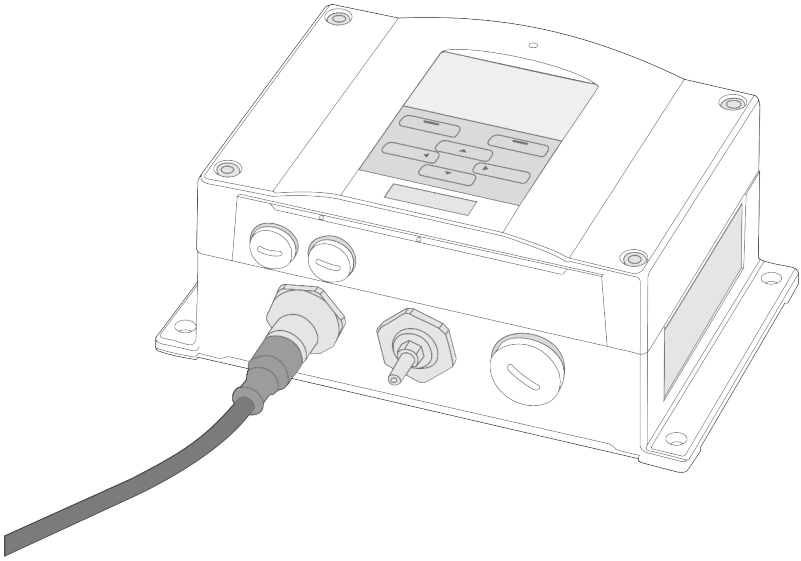

VAISALA

AKRIBIS · www.akribis.info · contacto@akribis.info

PUBLISHED BY

Vaisala Oyj
Vanha Nurmijärventie 21, FI-01670 Vantaa, Finland
P.O. Box 26, FI-00421 Helsinki, Finland
+358 9 8949 1
vaisala.com
docs.vaisala.com

© Vaisala 2026

No part of this document may be reproduced, published, or publicly displayed in any form or by any means, electronic or mechanical (including photocopying), nor may its contents be modified, translated, adapted, sold, or disclosed to a third party without prior written permission of the copyright holder. Translated document and translated portions of the document are based on the original English version. Parts of the translation may have been created using machine-assisted translation. In ambiguous cases, the English version is applicable, not the translation.

The contents of this document are subject to change without prior notice.

Local rules and regulations applicable to the products and services may vary, and they shall take precedence over the information contained in this document. Vaisala makes no representations on this document's compliance with the local rules and regulations applicable at any given time, and hereby disclaims any and all responsibilities related thereto. You are instructed to confirm the applicability of the local rules and regulations and their effect on the intended use of the products and services.

This document does not create any legally binding obligations for Vaisala towards customers or end users. All legally binding obligations are set forth exclusively in the applicable contract or in the relevant set of General Conditions of Vaisala (vaisala.com/policies).

This product contains software developed by Vaisala or third parties. Use of the software is governed by license terms and conditions included in the applicable contract or, in the absence of separate license terms and conditions, by the General License Conditions of Vaisala Group.

This product may contain open-source software (OSS) components. In the event this product contains OSS components, then such OSS is governed by the terms and conditions of the applicable OSS licenses, and you are bound by the terms and conditions of such licenses in connection with your use and distribution of the OSS in this product. Applicable OSS licenses are included in the product itself or provided to you on any other applicable media, depending on each individual product and the product items delivered to you.

Table of contents

1. About this document ... 7
1.1 Version information ... 7
1.2 Related manuals ... 7
1.3 Documentation conventions ... 8
1.4 Trademarks ... 8

2. Product overview ... 9
2.1 Introduction to Vaisala BAROCAP Digital Barometer PTB330 ... 9
2.1.1 Features and options ... 9
2.1.2 Pressure measurement ... 10
2.1.3 Barometer structure ... 11
2.1.4 Inner structure ... 12
2.2 Safety ... 13
2.2.1 ESD protection ... 13

3. Installation ... 14
3.1 Mounting PTB330 ... 14
3.1.1 Standard mounting without mounting plate ... 14
3.1.2 Mounting with wall mounting kit ... 14
3.1.3 Mounting with DIN rail installation kit ... 16
3.1.4 Mounting on pole with installation kit ... 17
3.1.5 Mounting rain shield with installation kit ... 20
3.1.6 Mounting panel mounting frame ... 21
3.2 Maritime installation ... 23
3.3 Pressure connections ... 26
3.4 Wiring and grounding ... 27
3.4.1 Cable bushings ... 27
3.4.2 Grounding cables ... 28
3.4.3 Grounding barometer housing ... 29
3.5 Powering options ... 29
3.5.1 Screw terminal connection ... 30
3.5.2 M12 (8-pin) connector ... 31
3.5.3 D9 connector ... 32
3.6 Optional modules ... 33
3.6.1 Installing AC power supply module (POWER-1) ... 33
3.6.2 Galvanic isolation module installation (DCDC-1) ... 35
3.6.3 Installing analog output module (AOUT-1T) ... 36
3.6.4 Installing relay module RELAY-1L ... 38
3.6.5 Relay module (RELAY-1L) ... 39
3.6.6 Installing RS-422/RS-485 interface module (RS-485-1) ... 40

4. Operation ... 45
4.1 Getting started ... 45

4.2 Display/keypad (optional) 45
4.2.1 Basic display 45
4.2.2 Menu navigation 46
4.2.3 Pressure 3-hour trend and tendency 46
4.2.4 Graphic history 48
4.2.5 Information display 50
4.2.6 Display settings 50
4.2.7 Changing measuring settings 52
4.2.8 Setting diagnostic settings 52
4.2.9 Changing serial interface settings 53
4.2.10 System settings 54
4.2.11 Relay settings 56
4.2.12 Analog output settings 58
4.3 Using MI70 Link Interface Software 59
4.4 Serial line communication 59
4.4.1 User port connection 60
4.4.2 Service port connection 61
4.4.3 Opening serial and USB connection 62
4.5 PTB330 serial commands 63
4.6 General settings 67
4.6.1 Quantities and units 67
4.6.2 Measurement commands 73
4.6.3 User port serial settings 79
4.6.4 System information commands 82
4.6.5 Resetting barometer by using serial line 84
4.6.6 Locking menu/keypad by using serial line 84
4.7 Data recording 85
4.7.1 Selecting data recording quantities 85
4.7.2 View recorded data 86
4.8 Operating relays 88
4.8.1 Relay setpoints 88
4.8.2 Hysteresis 90
4.8.3 Relay indicating barometer error status 90
4.8.4 Enabling/disabling relays 91
4.8.5 RSEL command 91
4.8.6 Testing operation of relays 92
4.8.7 RTEST command 92
4.9 Operating RS-485 module 93
4.9.1 Networking commands 93
4.10 Operating analog output 95
4.10.1 Changing output mode and range 95
4.10.2 Analog output quantities 97
4.10.3 Analog output tests 97
4.10.4 Analog output fault indication setting 98

5. Calibration 99
5.1 Calibration overview 99

5.2 Pressure 99
5.3 Opening and closing the adjustment mode 100
5.4 PTB330 pressure adjustment 100
5.4.1 Adjusting with display/keypad 101
5.4.2 Linear/offset adjustment using serial line 102
5.4.3 Multipoint adjustment using serial line 104
5.5 Analog output adjustment (Ch1) 106
5.5.1 Adjusting analog output with display and keypad 106
5.5.2 Adjusting analog output with the serial line 107
5.6 Feeding adjustment information 107
5.6.1 Typing adjustment information with display and keypad 108
5.6.2 Feeding adjustment information with serial line 108

6. Maintenance 109
6.1 Cleaning 109
6.2 Errors 109

7. Technical data 112
7.1 PTB330 specifications 112
7.2 Optional module specifications 116
7.3 PTB330 dimensions 118

8. Vaisala services 122
8.1 Service centers 122
8.2 Technical support 122
8.3 Warranty 122

Appendix A: Calculation formulas 124
A.1 ICAOQNH mode for QNH and QFE 125

Appendix B: Unit conversion tables 126

Appendix C: PA11A Emulation Mode 130
C.1 PA11A emulation mode 130
C.1.1 Activating PA11A emulation mode 130
C.1.2 PA11A message format 130

Recycling 133

1. About this document

1.1 Version information

This document provides information for installing, operating and maintaining Vaisala BAROCAP Digital Barometer PTB330.

Table 1 Document versions

Document code	Date	Description
M210855EN-G	April 2026	Corrected the name of the M12 connector in the barometer structure figure.
M210855EN-F	September 2025	• Adjusted the female D9 connector description. • Added an example of offset adjustment. • Corrected the AC adapter code to 222340SP.
M210855EN-E	December 2024	• Added information about junction box ASM211113 and maritime installation. • Updated compliance information. • Removed Modbus information. • Updated cable information. • Updated dimension figures. • Updated pressure tubing instructions.

1.2 Related manuals

For the latest versions of these documents, see docs.vaisala.com.

Table 2 Related manuals

Document code	Name
M210983EN	Vaisala Barometric Pressure Transfer Standard PTB330TS User Guide
M210855EN	Vaisala BAROCAP Digital Barometer PTB330 User Guide
M210624EN	POWER-1 Installation Guide

1.3 Documentation conventions

WARNING! Warning alerts you to a serious hazard. If you do not read and follow instructions carefully at this point, there is a risk of injury or even death.

CAUTION! Caution warns you of a potential hazard. If you do not read and follow instructions carefully at this point, the product could be damaged or important data could be lost.

Highlights important information on using the product.

Gives information for using the product more efficiently.

Lists tools needed to perform the task.

Indicates that you need to take some notes during the task.

1.4 Trademarks

Vaisala® and BAROCAP® are registered trademarks of Vaisala Oyj.

Microsoft®, Windows®, and Excel® are either registered trademarks or trademarks of Microsoft Corporation in the United States and/or other countries.

2. Product overview

2.1 Introduction to Vaisala BAROCAP Digital Barometer PTB330

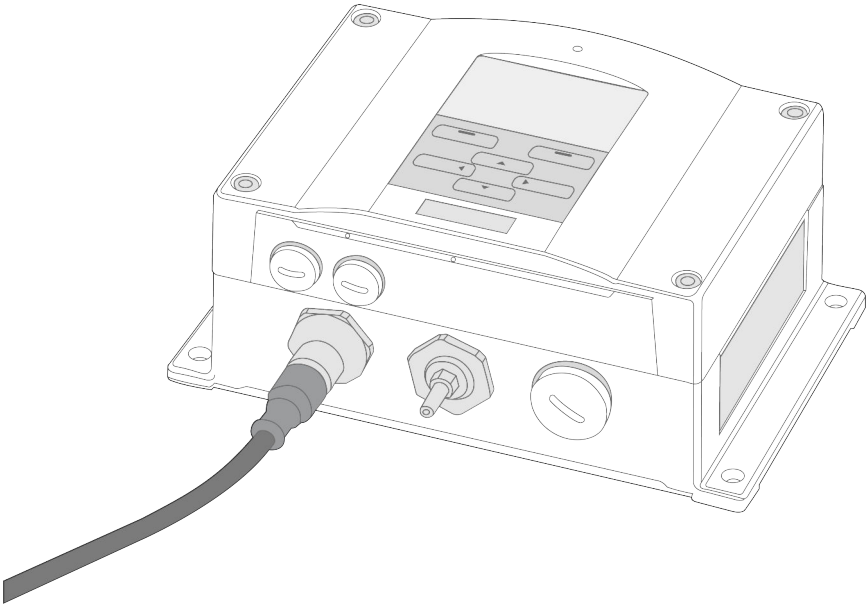

Vaisala BAROCAP Digital Barometer PTB330 provides reliable pressure measurement in a wide range of applications. It is designed for professional meteorology and aviation, laboratories, and industrial applications. Digital outputs RS-232 (standard) or RS-422/485 (optional) are available. Alternatively, you can choose analog output, either current or optional voltage signals. PTB330 provides a local graphical display.

PTB330 can be used both in accurate pressure measurement applications at room temperature and in demanding outdoor applications.

2.1.1 Features and options

- Calculated aviation-related output quantities: QFE and QNH
- BARO-1 barometer modules (sensors) 1, 2, or 3 pcs
- Barometer mounting accessories for multiple installation purposes
- Service port for MI70 Link Interface Software or PC
- IP65 housing
- Screw terminal, optional M12 connector or D9 connector

- Graphical display showing the measurement trends of the quantities chosen by the user (optional)
- Power supply module, RS-485 module, analog output module, and relay module (optional)
- USB cable for service use or data transfer (optional)

2.1.2 Pressure measurement

PTB330 uses a BAROCAP silicon capacitive absolute pressure sensor developed by Vaisala for barometric pressure measurement applications. The BAROCAP sensor offers hysteresis and repeatability characteristics, low temperature dependence, and long-term stability. The BAROCAP sensor is robust and resistant to mechanical and thermal shocks.

PTB330 measurement principle is based on an advanced RC oscillator and reference capacitors against which the capacitive pressure sensor is continuously measured. PTB330 microprocessor performs compensation for pressure linearity and temperature dependence.

Each barometer module in PTB330 has its own adjustment coefficients for different reference pressures across the entire temperature range. This achieves the best possible accuracy needed in barometric pressure measurements.

Table 3 Measured quantities

Quantity	Abbreviation
Pressure (measures average pressure from P_1, P_2, and P_3)	P
Pressure from barometer module 1, 2, or 3	P_1, P_2, and P_3
Temperature of barometer module 1, 2, or 3	T_{P1}, T_{P2}, and T_{P3}
Pressure trend (includes pressure tendency on display)	P_{3h}
Pressure difference ($P_1 - P_2$)	ΔP_{12}
Pressure difference ($P_1 - P_3$)	ΔP_{13}
Pressure difference ($P_2 - P_3$)	ΔP_{23} (available on serial port only)
QNH pressure	QNH
QFE pressure	QFE
Height corrected pressure	HCP
Pressure tendency (available on serial port only)	A_{3h}

More information

- Changing quantities (page 50)

2.1.3 Barometer structure

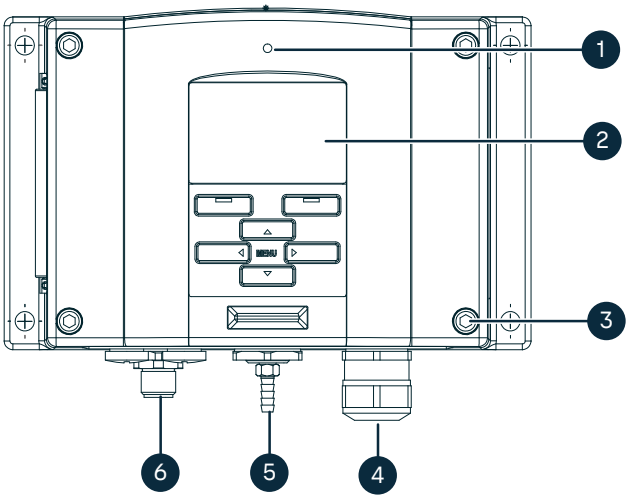

Figure 1 Barometer structure

1 Cover LED
2 Display with keypad (optional)
3 Cover screw (4 pcs)
4 Cable for optional power supply/relay module Ø 8–11 mm
5 Pressure port
6 M12 8-pole connector

2.1.4 Inner structure

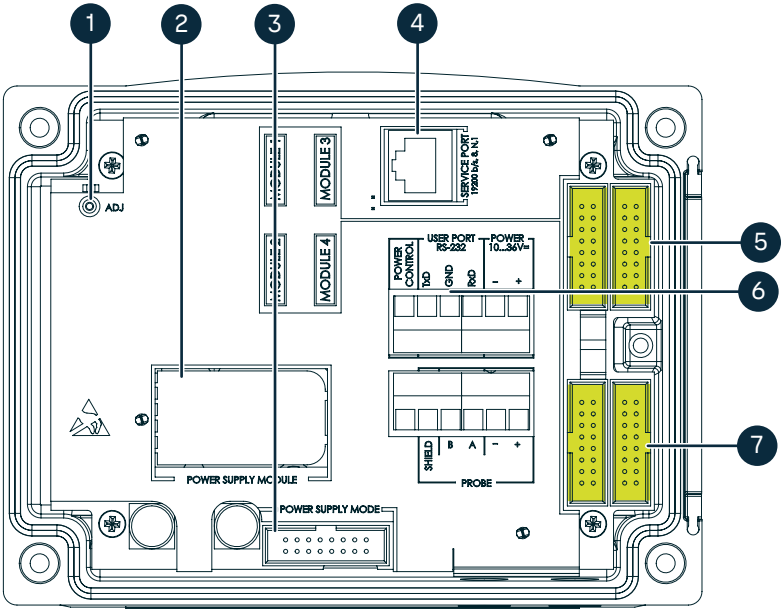

Figure 2 PTB330 interior

1 Adjustment button **ADJ** with indicator LED
2 Galvanic isolation module (optional)
3 Power supply mode selections
4 Service port (RS-232)
5 Module 1 and module 3 connectors
6 User port
7 Module 2 and module 4 connectors

> Do not change the factory settings of the power supply mode.

More information

- Installing relay module RELAY-1L (page 38)

2.2 Safety

This product has been tested for safety. Note the following precautions:

WARNING! Only licensed experts may install electrical components. They must adhere to local and state legislation and regulations.

WARNING! Do not substitute parts or modify the product. Improper modification can damage the product or lead to malfunction.

WARNING! Failure to comply with these precautions or with specific warnings elsewhere in these instructions violates safety standards of design, manufacture, and intended use of the product. Vaisala assumes no liability for the customer's failure to comply with these requirements.

WARNING! If the equipment is used in a manner not specified by Vaisala, the protection provided by the equipment may be impaired.

2.2.1 ESD protection

Electrostatic discharge (ESD) can damage electronic circuits. Vaisala products are adequately protected against ESD for their intended use. However, it is possible to damage the product by delivering electrostatic discharges when touching, removing, or inserting any objects in the equipment housing.

To avoid delivering high static voltages to the product:

- Handle ESD-sensitive components on a properly grounded and protected ESD workbench or by grounding yourself to the equipment chassis with a wrist strap and a resistive connection cord.
- If you are unable to take either precaution, touch a conductive part of the equipment chassis with your other hand before touching ESD-sensitive components.
- Hold component boards by the edges and avoid touching component contacts.

3. Installation

3.1 Mounting PTB330

You can mount PTB330 housing:

- Without a mounting plate
- With optional mounting plates

More information

- Mounting with wall mounting kit (page 14)
- Mounting with DIN rail installation kit (page 16)
- Mounting on pole with installation kit (page 17)
- Mounting rain shield with installation kit (page 20)
- Mounting panel mounting frame (page 21)

3.1.1 Standard mounting without mounting plate

Fasten PTB330 housing to the wall with 4 screws, for example M6 (not provided).

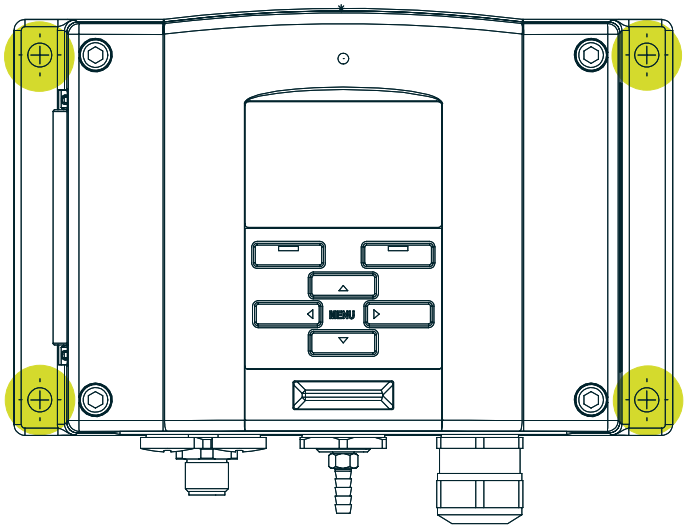

3.1.2 Mounting with wall mounting kit

You can mount the wall mounting kit (214829):

- On a wall

- On a standard wall box (or a US junction box)

The wall mounting kit includes:
- Plastic mounting plate
- M3 fixing screws (4 pcs)

When wiring through back wall, remove the plastic plug from PTB330 wiring hole before mounting.

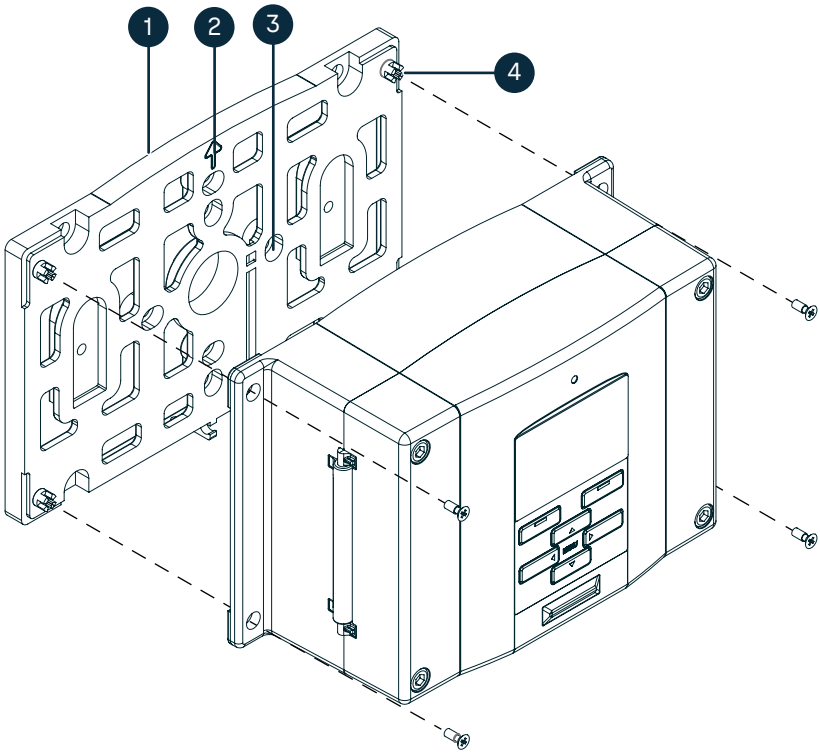

1 Plastic mounting plate
2 Arrow
3 Holes for wall box or junction box mounting
4 Fixing screws M3

Make sure that the arrow points upwards.

1. Mount the plastic mounting plate to the wall with 4 M6 screws (not provided).
2. Attach PTB330 to the plastic mounting plate with 4 M3 fixing screws.

3.1.3 Mounting with DIN rail installation kit

The DIN rail installation kit (215094) includes:
- Plastic mounting plate
- Connector accessory (2 pcs)
- Crosshead screw M4 x 10 DIN 7985 (2 pcs)
- Crosshead screw M3 x 12 DIN 965 (4 pcs)

To mount PTB330 with the DIN rail installation kit:

1. Attach 2 connector accessories to the plastic mounting plate by using the screws provided in the DIN rail installation kit.
2. Fasten PTB330 to the plastic mounting plate with the 4 screws provided.

3. Press PTB330 onto the DIN rail so that the connector accessories snap onto the rail.

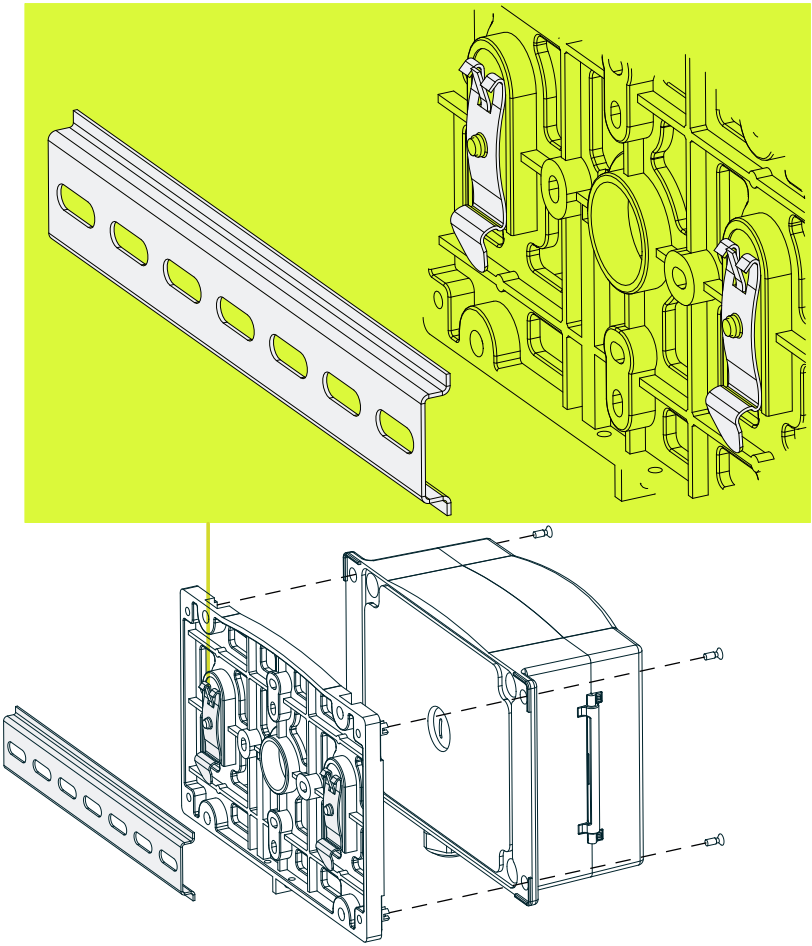

3.1.4 Mounting on pole with installation kit

Installation kit for pole or pipeline (215108):
- Metal mounting plate
- Fixing bracket for 30–102 mm pole (2 pcs)
- Mounting nuts M8 for pole mounting (4 pcs)

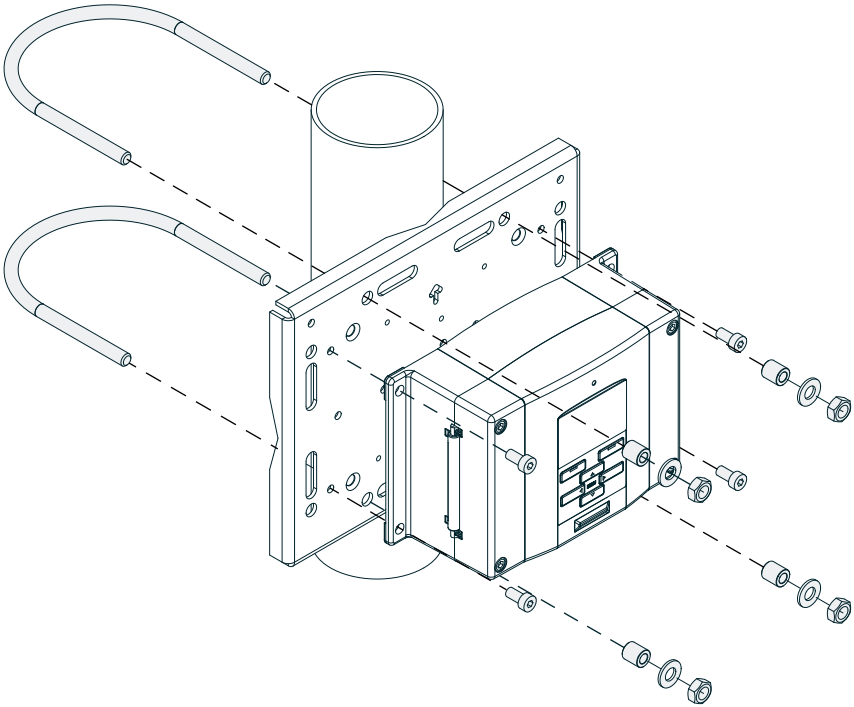

Figure 3 Vertical pole

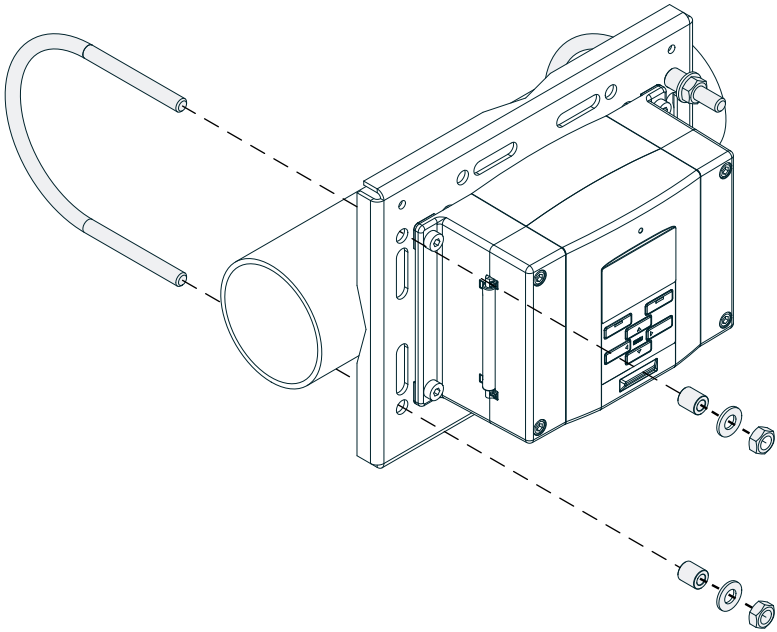

Figure 4 Horizontal pole

The wall mounting plate is included in the weather shield installation kit (215109) and installation kit for pole and pipeline (215108).

- Metal mounting plate
- Fixing nut M6 (4 pcs)

1. Attach the mounting plate to the pole with 4 M8 screws (not provided).
2. Attach PTB330 to the mounting plate with 4 M6 fixing screws.

Make sure that the arrow points upwards.

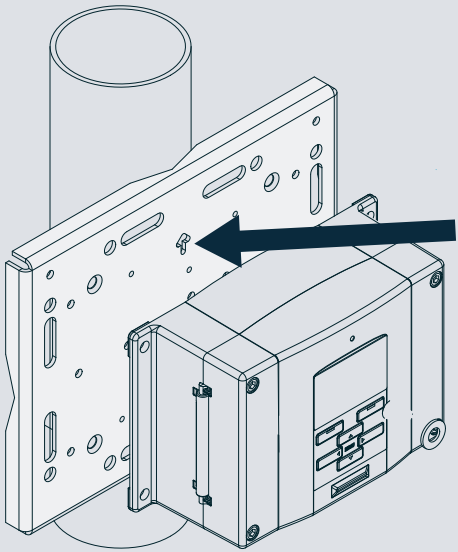

More information

- Mounting rain shield with installation kit (page 20)

3.1.5 Mounting rain shield with installation kit

- Rain shield
- Installation kit (215109)
- Metal mounting plate
- M6 mounting screws (2 pcs)

1. Fasten the rain shield with installation kit (215109) to the metal mounting plate with 2 M6 mounting screws (provided).

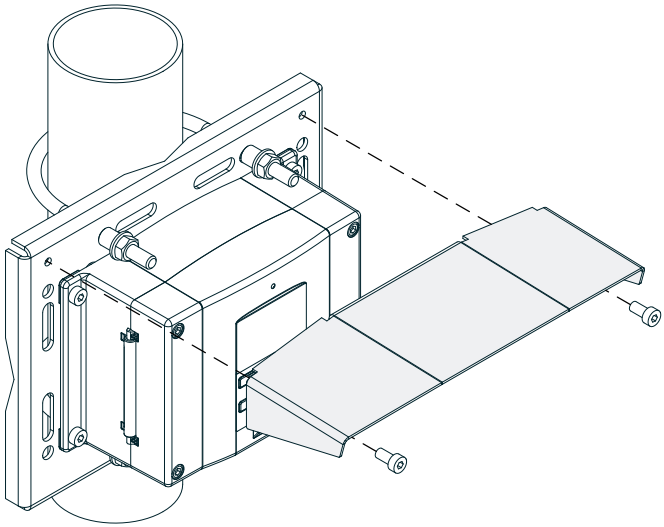

2. Fasten the mounting plate with rain shield with installation kit to the wall or to the pole.
3. Fasten PTB330 to the mounting plate with 4 fixing screws (provided).

More information

- Mounting on pole with installation kit (page 17)

3.1.6 Mounting panel mounting frame

The optional panel mounting frame (216038) offers a dirt-free embedded installation of PTB330. The frame is a thin, flexible plastic frame for the barometer, with adhesive tape on one side. The frame is used to hide any rough edges of the installation hole and to provide a more finished look.

> The panel mounting frame is not intended to bear the weight of the barometer. It does not include any mounting supports.

1. Use the frame as a template to mark the required size for the installation hole in the panel.
2. Cut the hole in the panel.
3. Mount PTB330 through the panel with suitable supports.

4. Remove the paper protecting the adhesive tape on the frame, and attach the frame around the transmitter.

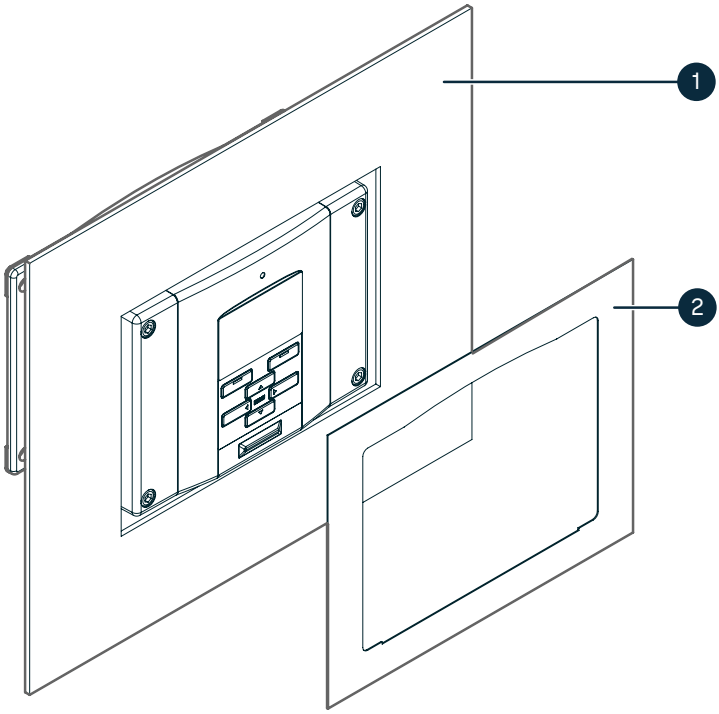

1 Panel (not included)
2 Panel mounting frame

More information

- PTB330 dimensions (page 118)

3.2 Maritime installation

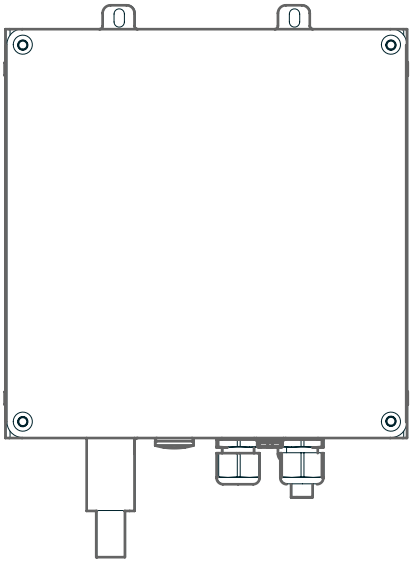

Figure 5 Junction box ASM211113

The junction box ASM211113 has a corrosion-resistant enclosure. It provides additional protection for PTB330 in maritime installations. The junction box includes cable glands, a signal and power cable, and a pressure port to reduce the effect of wind on pressure measurement.

The junction box for PTB330 comes with a tube to connect PTB330 to the pressure connector.

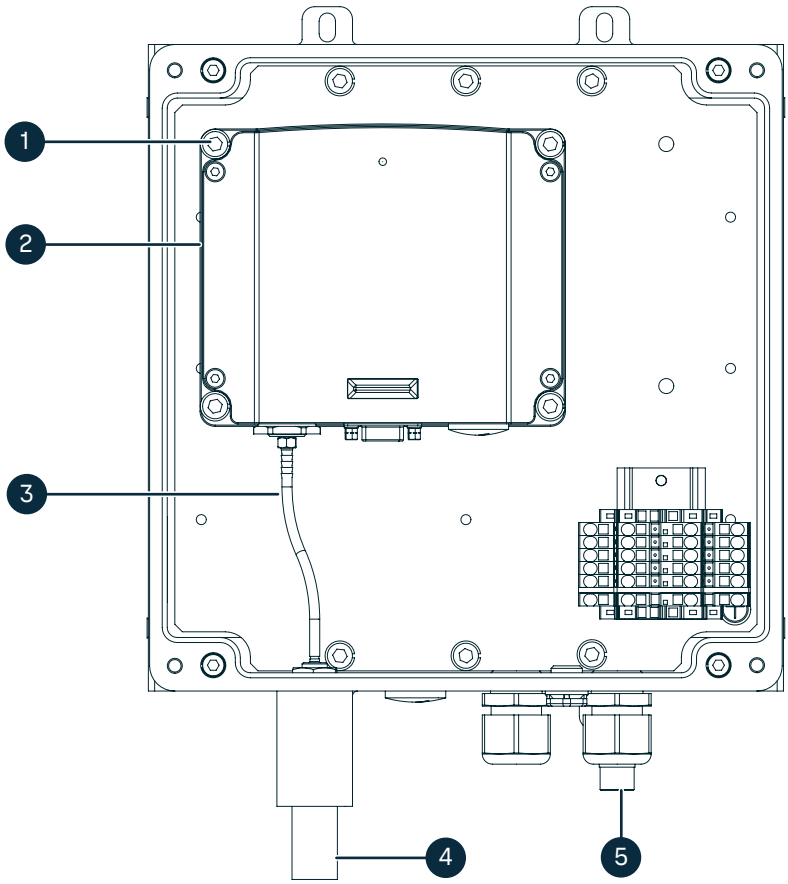

Figure 6 PTB330 inside ASM211113 junction box

1 M6 screw
2 Junction box ASM211113
3 Pressure tube
4 Pressure port
5 Sealing tab

The following figure shows the wiring of junction box ASM211113.

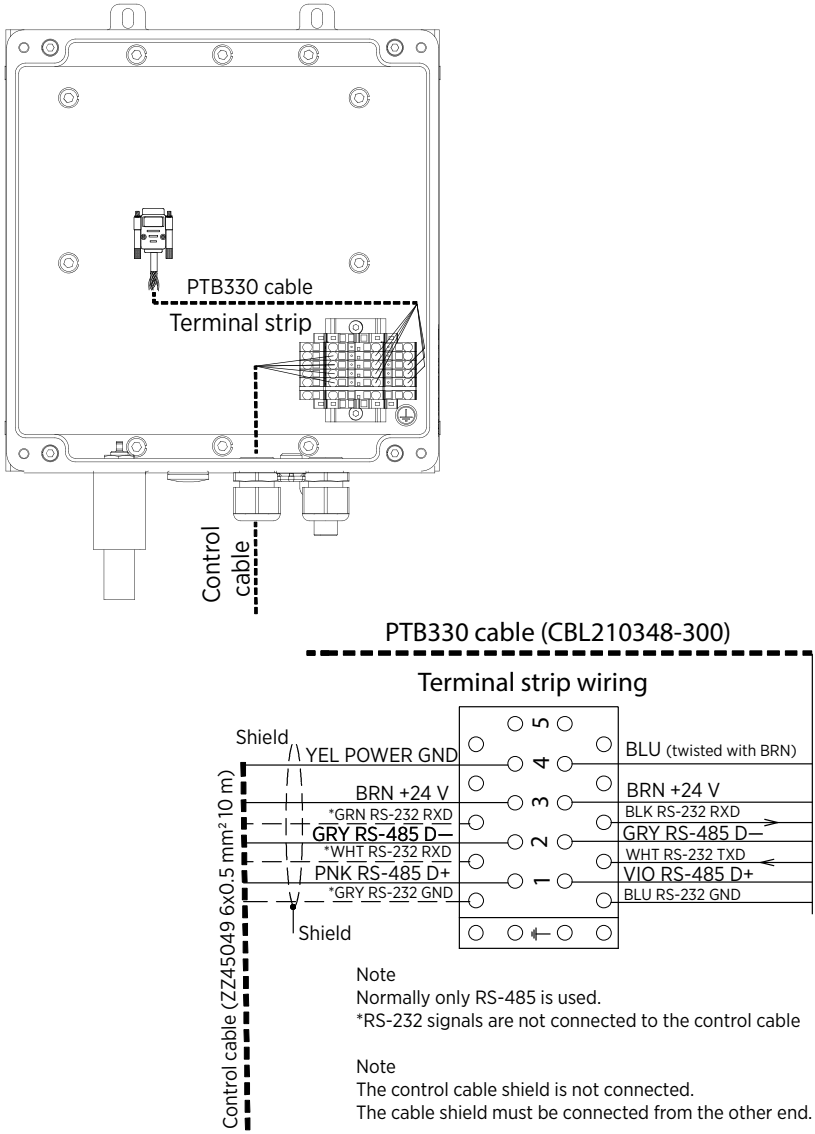

Figure 7 Wiring junction box ASM211113

More information

- PTB330 dimensions (page 118)

3.3 Pressure connections

Protect the pressure fitting from rain. If water gets into the pressure connector it may cause errors in the pressure measurement. PTB330 measures the pressure of clean, non-condensing, non-conducting, and non-corrosive gases only.

PTB330 is equipped with a barbed pressure fitting which is ideal for 3–4 mm internal diameter tubing. If you require some other pressure fitting, you can replace the standard barbed fitting. The main pressure connector in the barometer housing has a metric M5 internal thread but it is possible to use pressure fittings with a non-metric 10–32 external thread with the main pressure connector.

The barbed pressure fitting supplied with PTB330 is not a static pressure head and cannot be used in turbulent or high-speed wind conditions. The barometric pressure measurement accuracy of the PTB330 series digital barometers does not include any wind or air conditioning system induced measurement errors. If PTB330 is installed in turbulent or high wind conditions, Vaisala recommends using the static pressure head SPH10 (non-heated) or SPH20 (heated).

If you connect PTB330 to a static pressure head or pressure port, make sure the pressure tube points downwards from PTB330 so that condensed water does not accumulate inside the tube and cause measurement errors.
Shorten the pressure tube to appropriate length. Do not leave a bend in the tube where condensed water can be trapped.

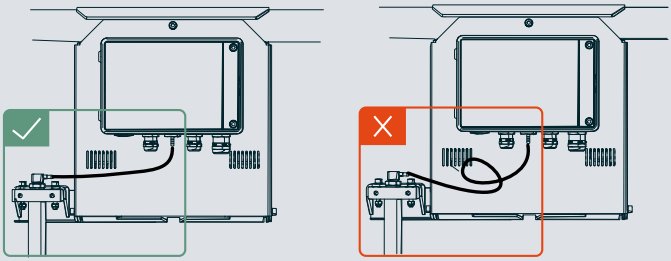

3.4 Wiring and grounding

3.4.1 Cable bushings

When there is high electric noise level (for example, near a powerful electric motor) in the operating environment, Vaisala recommends using shielded cables or making sure that the signal cables are separated from other cables.

Vaisala recommends using a single cable with screen and 3–10 wires for power and signal connections. The cable diameter is 8–11 mm.

The number of cable bushings depends on the barometer options.

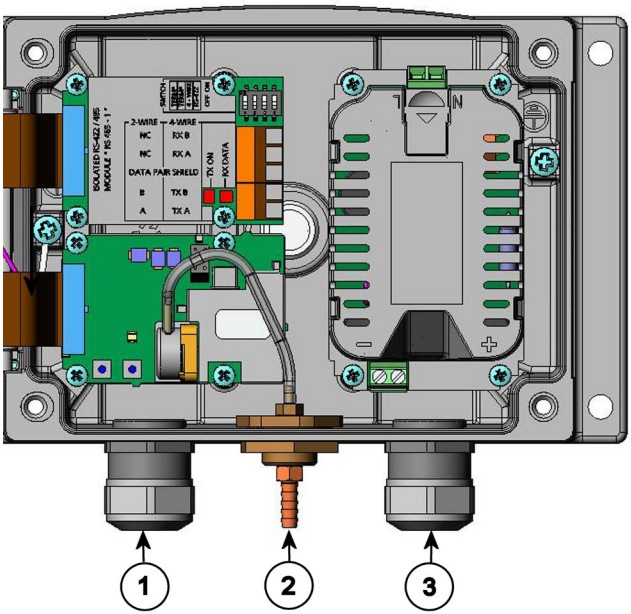

Figure 8 Cable bushings

1 Cable for signal/powering Ø 8–11 mm
2 Pressure port
3 Cable for optional power supply/relay module Ø 8–11 mm

3.4.2 Grounding cables

To ensure the best possible EMC performance, follow these instructions on cable grounding.

1. Cut the outer cable jacket to desired length.
2. Cut the cable screen braiding (or foil) of the cable insulation layer to 5 mm.

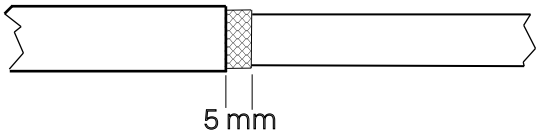

3. Push the domed cap nut and the seal insert with contact socket of the gland onto the cable.

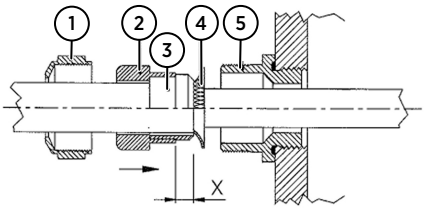

1 Domed cap nut
2 Seal insert
3 Contact socket of the gland
4 Screen braiding (or foil)
5 Lower part

4. Bend the screen braiding (or foil) by about 90°.
5. Push the seal insert with the contact socket of the gland up to the screen braiding (or foil).
6. Mount the lower part on the housing.

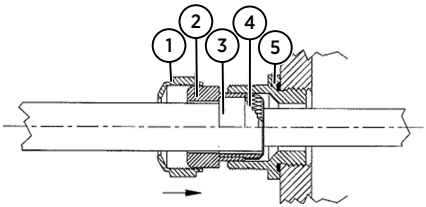

1 Domed cap nut
2 Seal insert
3 Contact socket of the gland
4 Screen braiding (or foil)
5 Lower part

7. Push the seal with the contact socket of the gland and flush into the lower part.
8. Screw the domed cap nut onto the lower part.

3.4.3 Grounding barometer housing

If you need to ground the barometer housing, the grounding connector is inside the housing.

WARNING! Make sure that different groundings are made to the same potential. Otherwise, harmful ground currents may be generated.

If you need a galvanic isolation of the power supply line from the output signals, you can order PTB330 with an optional output isolation module. This module prevents harmful grounding loops.

More information

- Screw terminal connection (page 30)

3.5 Powering options

PTB330 has 4 powering options. You select the wiring system when ordering the device. If a connector is needed for wiring, it is set at the factory.

Table 4 Powering options

Powering option	Link
Basic wiring	Screw terminal connection (page 30)
M12 connector	M12 (8-pin) connector (page 31)
D9 connector	D9 connector (page 32)
Optional external AC adapter	Installing AC power supply module (POWER-1) (page 33)

3.5.1 Screw terminal connection

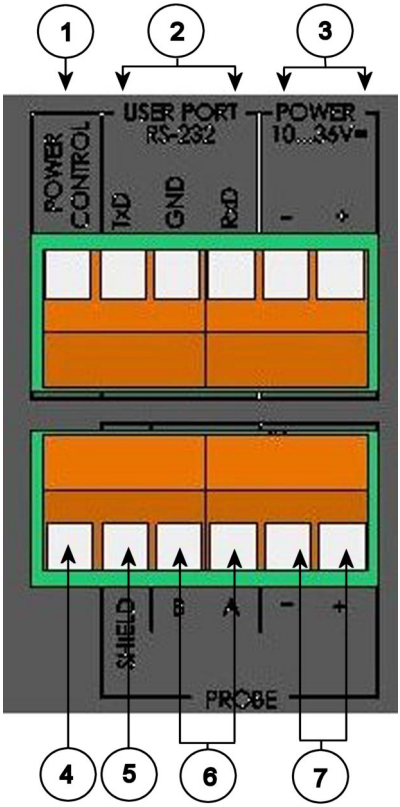

Figure 9 Screw terminal block on motherboard

1 Power control (0 V DC = OFF, 5 V DC = ON, if feature enabled)
2 User port RS-232 terminals
3 Power supply terminals 10–35 V DC
4 Test terminal (not connected, not used in PTB330)
5 Probe cable shield (not used in PTB330)
6 Probe bus (not used in PTB330)
7 Probe power (not used in PTB330)

WARNING! Make sure that you connect only de-energized wires.

To connect the signal and power supply wires:

1. Open the barometer cover by taking out the 4 cover screws.
2. Insert the power supply wires and signal wires through the cable bushing in the bottom of the barometer.
3. Connect the RS-232 user port cables to terminals **RxD**, **GND**, and **TxD**.
4. When wiring the RS-485 module, the relay module or the analog output module, see the sections about RELAY-1L installation and RS-422/RS-485 installation.
5. Connect the power supply wires to the connectors: **POWER 10-35 V** (**Power +**) and (**-**) terminals.
6. Turn on the power.

   The LED on the cover is on during normal operation.
7. Close the cover and tighten the cover screws.

   The barometer is ready for use.

> If you have the external power control option, you must remove the wire between the **POWER CONTROL** and **Power +** terminals before using the power control feature.

3.5.2 M12 (8-pin) connector

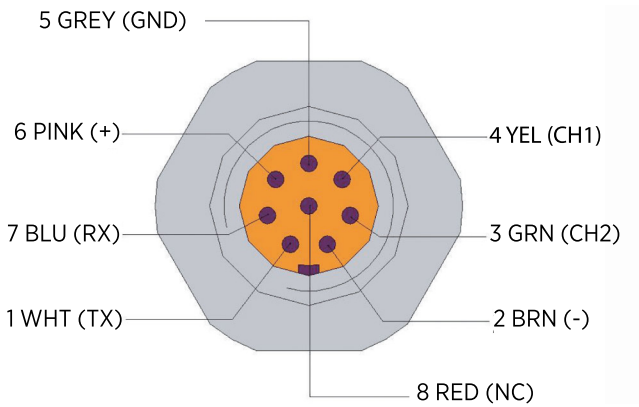

Figure 10 Wiring of optional M12 (8-pin) connector

Table 5 Pin assignments to RS-232-/RS-485 serial output

Pin/Terminal	Wire	Serial signal		Analog signal
RS-232 (AIE-232)	**RS-485 (EIA-485)**			
1	White	Data out TX	D1+	-
2	Brown	(Serial GND)	-	Signal GND
3	Green	External power control	Ext...	Ext...
4	Yellow	-	-	Analog output
5	Grey	Supply -	Supply -	Supply -
6	Pink	Supply +	Supply +	Supply +
7	Blue	Data in RX	D0 -	-
8	Red	Not connected	Not connected	Not connected

3.5.3 D9 connector

D9 connector is designed for indoor use. If you have a PTB330 with the D9 connector option, use a waterproof enclosure when installing PTB330 outdoors.

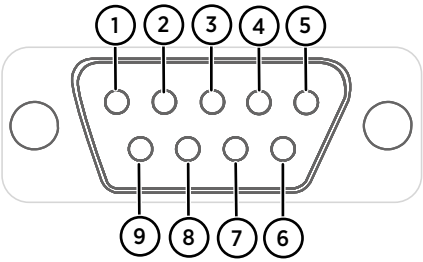

Figure 11 Wiring of optional D9 connector (female)

Table 6 Pins of RS-232/485 serial output

Pin	Wire color	Serial signal		Analog signal
		RS-232 (EIA-232)	RS-485 (EIA-485)	
1	Brown	Ground	-	Ground
2 (optional)	Yellow	External power control		
3	Black	RX	-	RX

Pin	Wire color	Serial signal		Analog signal
2	White	TX	-	TX
4	Red	-	-	-
6	Green	-	D0- (Lo)	Aout
7	Blue	Ground for supply voltage		
8	Grey	-	D1+ (Hi)	AGND
9	Orange	Supply voltage (10–30 V DC)		

3.6 Optional modules

3.6.1 Installing AC power supply module (POWER-1)

WARNING! Only licensed experts may install electrical components. They must adhere to local and state legislation and regulations.

WARNING! Do not disconnect the power supply module from PTB330 when power is on.

WARNING! Do not connect the AC (mains) power to the power supply module when it is not installed in PTB330.

WARNING! Always connect the protective ground terminal.

WARNING! Do not replace the AC (mains) cable with an inadequately rated cable.

The AC (mains) power connection may be connected to the power supply module only by an authorized electrician, unless you order a unit with a pre-installed power cord. A readily accessible disconnect device must be incorporated in the fixed wiring.

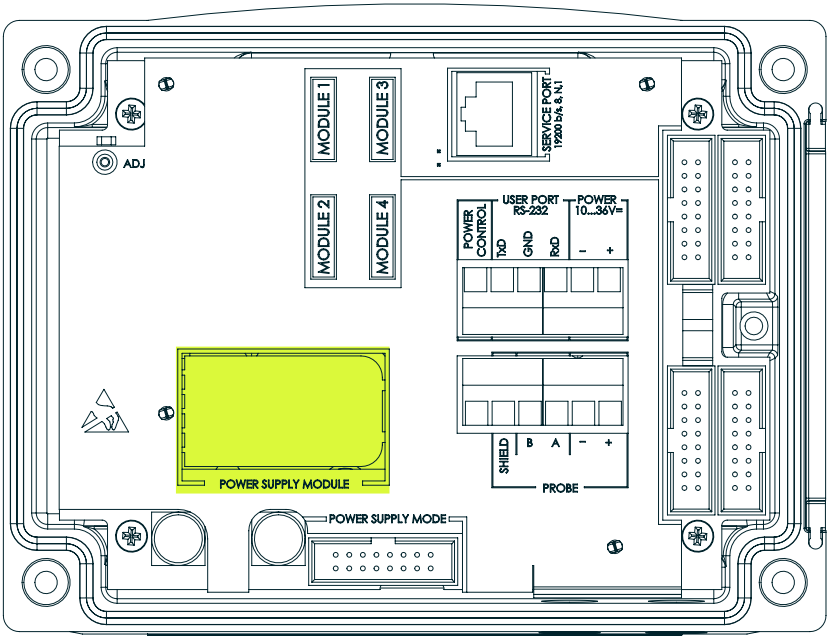

Figure 12 Power supply module

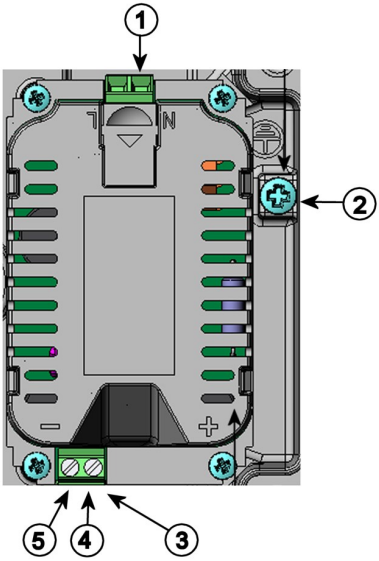

Figure 13 AC (mains) power supply module

1 Connect AC (mains) voltage wires to these terminals
2 Grounding terminal
3 If the module is not installed in the factory: Connect wires from these terminals to the **POWER 10-35 V** terminals of the motherboard.
4 **Power +** terminal
5 **-** terminal

1. Disconnect the power and open the barometer cover.
2. Remove the protective plug from the cable gland and thread the wires. If the power supply module is installed in the factory, continue with step 5.
3. To attach the module fasten the power module to the bottom of the housing with 4 screws.
4. Connect the wires from the terminals of the power supply module marked with **Power +** and **-** to the terminals **POWER 10-35 V** on the motherboard of the barometer.
5. Connect the AC (mains) voltage wires to the power supply module terminals marked with **N** and **L**.
6. Attach the grounding wire to the grounding terminal on the right-hand side of the barometer.
7. Connect the power. The LED on the cover of the barometer is lit continuously during normal operation.

3.6.2 Galvanic isolation module installation (DCDC-1)

If you need galvanic isolation of the power supply line from the output signals, you can order PTB330 with an optional galvanic isolation module. The module prevents harmful grounding loops.

Galvanic isolation module is not needed when using the AC power supply module.

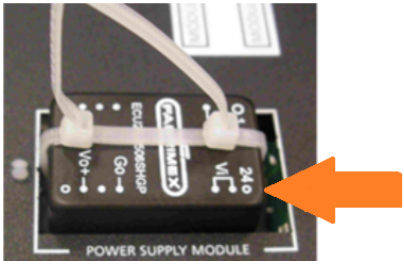

Figure 14 Galvanic isolation module

3.6.3 Installing analog output module (AOUT-1T)

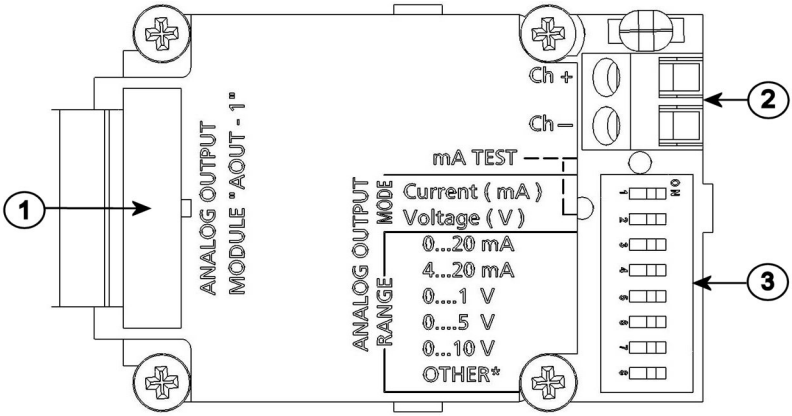

Figure 15 Analog output 1 module AOUT-1T

1 Flat cable pins
2 Screw terminals for signal line
3 DIP switches to select the output mode and range

1. Power off PTB330.

   If the analog output module is installed at the factory, continue with step 4.

2. To attach the module, open PTB330 cover and fasten the analog output module to the bottom of the housing on the module slot 1 with 4 screws.

3. Connect the flat cable between the analog output module and the motherboard pins **MODULE1**.
4. Take out the protective plug from the cable gland and thread the wires.
5. Connect the wires to the screw terminals **Ch–** and **Ch+**.

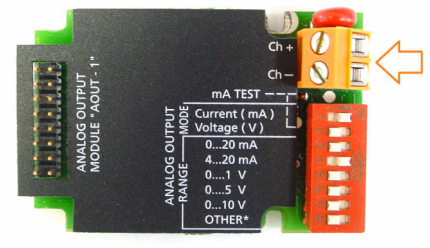

6. Select the current/voltage output by setting **ON** either of the switches 1 or 2.

> Only one of the switches 1 and 2 can be ON at a time. Only one of the switches 3 to 7 can be ON at a time.

7. Select the range by setting **ON** one of the switches 3 to 7.
8. Connect power.
9. If you are replacing an existing module, the installation is complete.

   If you are adding a new module, continue with next step.
10. Connect to the service port and type **`MODS`** in the terminal window to register the changes.

11. Disconnect power and connect it again to clear related errors and to activate the changes.

	OFF	ON	Selection
1			Current output selection, ON=Current output selected
2			Voltage output selection, ON=Voltage output selected
3			0...20 mA selection, ON= 0...20 mA selected
4			4... 20 mA selection, ON= 4... 20 mA selected
5			0...1 V selection, ON=0...1 V selected
6			0...5 V selection, ON=0...5 V selected
7			0...10 V selection, ON= 0...10 V selected.
8			For service use only, keep always in OFF position.

The analog output is ready for use.

More information

- Operating analog output (page 95)

3.6.4 Installing relay module RELAY-1L

PTB330 can be equipped with 1 configurable relay module. The module contains 2 configurable relays.

The relay module is only intended for DC use.

1. Switch off power and open the barometer cover. If the relay-module is installed in the factory, continue with step 5.
2. To attach the module, place a protective plate to the bottom of the housing at module slot 3 and fasten the relay module to the top of the plate with 4 screws.
3. When the mains power is in use attach the grounding wire to the grounding terminal.
4. Connect the flat cable between the relay module and the **MODULE3** pins of the motherboard.
5. Take out the protective plug from the cable gland and thread the relay wires.
6. Connect the wires to the screw terminals: **NO**, **C**, **NC**.
7. Connect the power and close the cover.
8. If you are replacing an existing module, the installation is complete. If you are adding a new module, continue to the next step.
9. Connect to the service port, and execute the **MODS** command to register the changes.

10. Switch the power off and back on again to clear related errors and to activate the changes.

More information

- Relay module (RELAY-1L) (page 39)
- Screw terminal connection (page 30)

3.6.5 Relay module (RELAY-1L)

WARNING! The relay module may contain dangerous voltages even if the barometer power has been disconnected. Before opening the barometer you must switch off both the barometer and the voltage connected to the relay terminals.

WARNING! Do not connect the AC (mains) power to the relay unit.

The middlemost **C** terminal and one of the terminals NO/NC must be connected. The polarity can be freely selected.

NO	Normally open
C	Common relay contact
NC	Normally closed

Relay not activated	**NO** is open, **C** and **NC** outputs are closed
Relay activated	C and **NC** are open, **C**and **NO** outputs are closed,

For instructions on how to operate the relay (for example, select quantity for the relay output and set the relay setpoints).

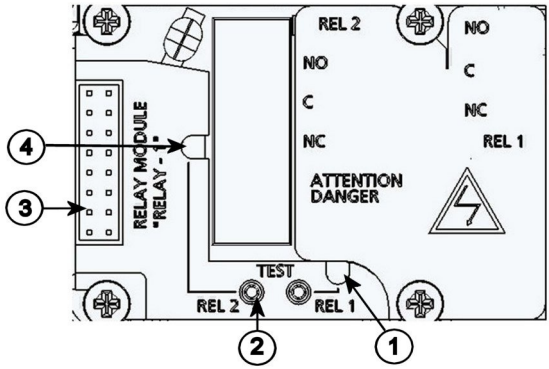

Figure 16 Relay module

1 Indication LED for the relay 1
2 Relay test buttons
3 Flat cable pins
4 Indication LED for relay 2

More information

- Installing relay module RELAY-1L (page 38)
- Operating relays (page 88)

3.6.6 Installing RS-422/RS-485 interface module (RS-485-1)

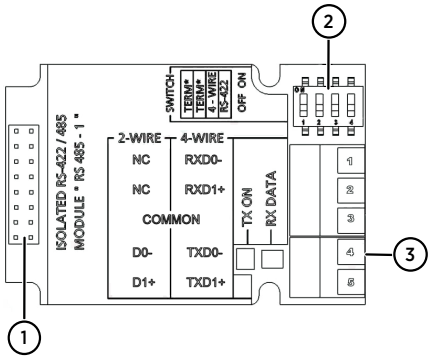

Figure 17 RS-485-1 module

1 Flat cable pins
2 Selection switches
3 Screw terminals for wiring

1. Power off PTB330.

   If the RS-485-module is installed in the factory, continue with step 4.
2. To attach the interface module, open PTB330 cover and fasten the RS-485 module to the bottom of the housing with 4 screws on the module slot 1.
3. Connect the flat cable between the RS-485 module and the pins on **MODULE1** (Communications) on the motherboard.
4. Pull the network wiring through the cable gland.
5. Connect the twisted pair wires (1 or 2 pairs) to the screw terminals. See table Table 7 (page 42).
6. Connect the RS-422/RS-485 common wire/shield to screw terminal **Common**.
7. Perform a or b.

   a. If you use RS-485 (or RS-422) to connect only 1 barometer to a main computer, enable the internal termination of the barometer by switching switches 1 and 2 ON. Make sure that the main computer's end of the line is terminated. Use main computer's internal termination or with a separate terminator.

   b. If you are connecting several barometers to the same RS-485 bus, make sure that switches 1 and 2 are OFF and terminate the bus with separate terminators at both ends. This allows removing any barometer without blocking the bus operation.
8. Select the bus type (4-wire/2-wire) with the selection switch 3.
9. In a 4-wire mode RS-485 primary device sends data to PTB330 through terminals **RxD1+** and **RxD0−** and receives data from PTB330 barometer through terminals **TxD1+** and **TxD0−**.
10. When operating in communication mode RS-422, set both switches 3 and 4 ON. The 4-wire wiring is required for RS-422 mode.
11. Power up and close the cover.
12. If you are replacing an existing module, the installation is complete. If you are adding a new module, continue to the next step.
13. Connect to the service port and to register the changes, type **`MODS`** in the terminal window.

14. Power off and on again to clear related errors and to activate the changes.

> If you use the internal termination of PTB330 at the end of the RS-485 bus (instead of separate terminators), removing the barometer may block the bus operation.

Table 7 Connecting twisted pair wires to screw terminals

Screw terminal	Data line (2-wire RS-485)	Data line (4-wire RS-485/422)
1	Not connected	RxD0-
2	Not connected	RxD1+
3	Shield/Common wire	Shield/Common wire
4	D0–	TxD0–
5	D1+	TxD1+

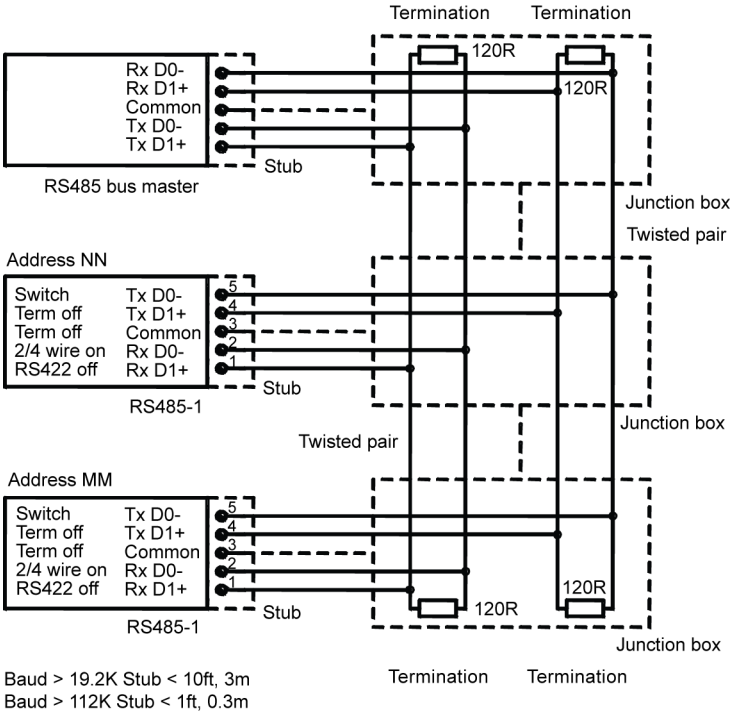

Figure 18 4-wire RS-485 bus

Table 8 4-wire (switch 3: ON)

RS-485 master	Data	PTB330
TxD+	→	RxD1+
TxD−	→	RxD0−
RxD+	←	TxD1+
RxD−	←	TxD0−
Common	N/A	Common

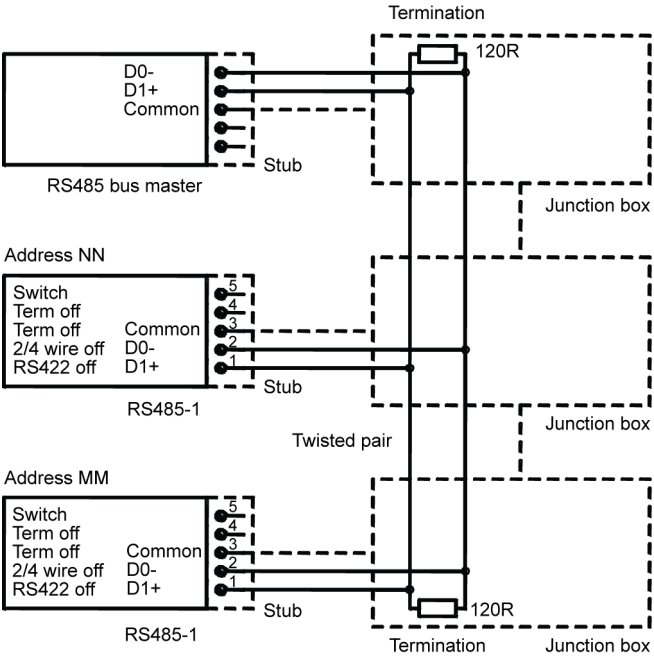

Figure 19 2-wire RS-485 bus

Table 9 2-wire (switch 3: Off)

RS-485 master	Data	PTB330
A	↔	A
B	↔	B

RS-485 master	Data	PTB330
Common	N/A	Common

More information

- Screw terminal connection (page 30)

4. Operation

4.1 Getting started

When PTB330 is powered up, the LED lights up. Steady LED light on PTB330 indicates normal operation.

If you use the optional display and turn on PTB330 for the first time, the language selection menu opens.

4.2 Display/keypad (optional)

4.2.1 Basic display

The display shows you the measurement values of the selected quantities in the selected units. You can select 1–4 quantities for the basic display. The basic display shows 2 quantities (**P** and **P1**) by default.

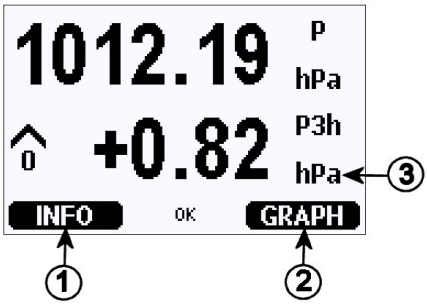

Figure 20 Basic display

1. The **Info** shortcut key/left function button
2. The **Graph** shortcut button/right function button
3. Quantities selected for display

To return directly to the basic display from any view, press and hold down the top right button on the front panel for 2 seconds.

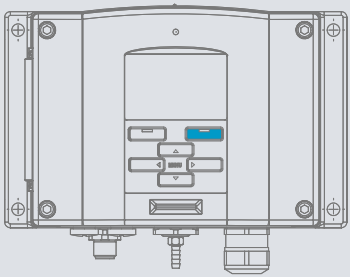

4.2.2 Menu navigation

Figure 21 Main menu

Table 10 Menu navigation

Menu	Action
Opening **MAIN MENU**	Press an arrow button in the basic display.
Moving vertically	Use the up/down arrow buttons.
Entering or exiting submenus	Use the left/right arrow buttons.
Selecting an option	Move the arrow button until the selected option is highlighted.
Opening a submenu	An arrow pointing right indicates a submenu. Press the right arrow button to open.
Setting a value	Press the function button.
Returning to previous menu level	Press left arrow button.
Returning to the basic display	Select **EXIT**.

4.2.3 Pressure 3-hour trend and tendency

The pressure tendency and trend readings are available when PTB330 has been powered up for at least 3 hours.

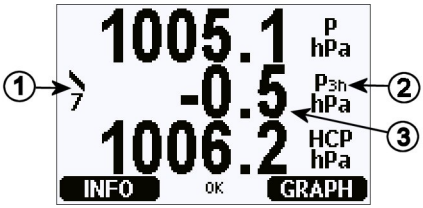

Figure 22 P_{3h} tendency

1 Tendency: Increasing/decreasing graph symbol with the code number
2 P_{3h} symbol
3 Trend (pressure change during last 3 hours)

4.2.3.1 Pressure tendency graphics

The following figure shows the characteristic symbols of pressure tendency during the 3 hours preceding the time of observation.

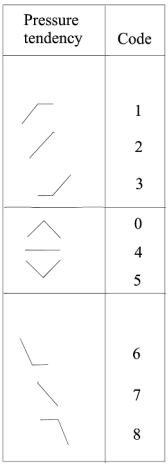

Figure 23 Pressure tendency

Code	Definition
0	Increasing, then decreasing; atmospheric pressure the same or higher than 3 hours ago
1	Increasing, then steady; or increasing, then increasing more slowly; atmospheric pressure now higher than 3 hours ago
2	Increasing (steadily or unsteadily); atmospheric pressure now higher than 3 hours ago
3	Decreasing or steady, then increasing; or increasing then increasing more rapidly; atmospheric pressure now higher than 3 hours ago
4	Steady; atmospheric pressure the same as 3 hours ago
5	Decreasing, then increasing; atmospheric pressure the same or lower than 3 hours ago
6	Decreasing, then steady; or decreasing, then decreasing more slowly; atmospheric pressure now lower than 3 hours ago
7	Decreasing (steadily or unsteadily); atmospheric pressure now lower than 3 hours ago
8	Steady or increasing, then decreasing; or decreasing then decreasing more rapidly; atmospheric pressure now lower than 3 hours ago

4.2.3.2 Displaying air pressure tendency

To display the pressure 3-hour trend and tendency reading through serial line, type in a terminal program:

```
>form "trend=" P3H " " "tend" A3H #RN
>
```

If you powered up PTB330 less than 3 hours ago, the pressure tendency is not yet calculated. The output * is displayed over the serial connection. The absence of the pressure trend is indicated in the same way.

More information

- Quantities and units (page 67)

4.2.4 Graphic history

The display shows the data trend of the selected quantities one at a time. The graph is updated automatically during measurement.

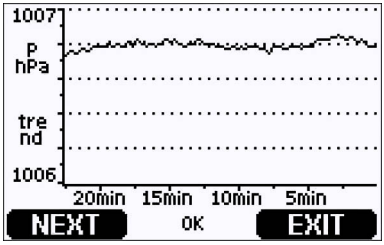

Figure 24 Graphical display

NEXT	Displays the trend graph and max./min. graph in turns. Browses through the quantities selected for the display.
EXIT	Returns to the basic display.

The trend graph displays a curve of average values. Each value is a calculated average over a period.

The max./min. graph displays the minimum and maximum values in a form of curve over a time period.

Table 11 Periods for trend and max/min calculations

Observation period	Period for trend/max./min. calculations (resolution)
20 minutes	10 seconds
3 hours	90 seconds
1 day	12 minutes
10 days	2 hours
2 months	12 hours
1 year	3 days

Up/down arrow	Zooms in and out the time.
Left/right arrow	Monitors the cursor mode where you can observe individual measuring points. Moves the cursor (vertical bar) along the time axis. The numerical value at the cursor position is shown at the upper left corner. The time from the present to the chosen moment is shown at the upper right corner.

Table 12 Graph information messages in cursor mode

Message	Interpretation
Power outage	Power failure (marked also with dashed vertical line).
No data	No data was recorded at pointed time.
Main unit failure	Generic failure detected at pointed time.
Meas. failure	Pressure measurement failure detected at pointed time.
Adj. mode active	The device was in the adjustment mode at pointed time.

A question mark after time indicates at least one power failure (dashed vertical line) has occurred after the chosen moment. The exact time difference between the present and the cursor position is not exactly known.

The 3h trend (P_{3h}) is not shown on the graphical display. Instead, the history readings of P (pressure) are displayed.

4.2.5 Information display

The information display contains the current settings and status of the device. You can access the display by selecting **Info** in the basic display. The information display shows the following information:

- Present or past unacknowledged errors (if any)
- Device identification: product name, version, and serial number
- Information on barometer modules
- Adjustment information
- Measuring settings
- Diagnostic settings
- Serial interface information
- Analog output information (when applicable)
- Relay output information (when applicable)

You can browse through the information view by selecting **MORE** until you see the desired information. You can also browse by using the arrow buttons. Select **OK** to return to the basic display.

Figure 25 Information display

4.2.6 Display settings

More information

- Changing quantities (page 50)
- Changing units (page 51)
- Changing rounding (page 51)
- Changing backlight setting (page 51)
- Adjusting contrast (page 52)
- Using keypad lock (page 52)

4.2.6.1 Changing quantities

1. To open the **MAIN MENU**, press any arrow button.
2. Select **Display** and press the right arrow button.

3. Select **Quantities** and press the right arrow button.
4. Select a quantity by using the up/down arrow buttons. To confirm, press **SELECT**. You can select 1–4 display quantities at a time. Undo selection by selecting it and pressing the **HIDE** button.
5. To return to the basic display, select **EXIT**.

Only the quantities selected for the display are stored in the graphical history. If a quantity is hidden, it is not stored in the memory of the barometer for the time being.

To show P_{3h} or A_{3h} readings over the serial line, select either P or P_{3h} must for display.

4.2.6.2 Changing units

1. To open the **MAIN MENU**, press any arrow button.
2. To select **Display**, press the right arrow button.
3. To select **Units**, use the up/down arrow buttons. Press the right arrow button.
4. To select display units, use the up/down arrow buttons. To confirm, select **CHANGE**.
5. To return to the basic display, select **EXIT**.

Changing the display quantities/units by using the display/keypad has no effect on the serial output data.

4.2.6.3 Changing rounding

You can round off one decimal by using the rounding function. The default setting is rounding off. Rounding has no effect on quantities without decimals.

1. To open the **MAIN MENU**, press any arrow button.
2. To select **Display**, press the right arrow button.
3. Select **Rounding** and then **ON**/**OFF**.
4. To return to the basic display, select **EXIT**.

4.2.6.4 Changing backlight setting

As a default the display backlight is always on. In the automatic mode the backlight stays on for 30 seconds from the last press of any button. When pressing any button, the light turns on again.

1. To open the **MAIN MENU**, press any arrow button.

2. To select **Display**, press the right arrow button.
3. Select **Backlight**, press **CHANGE**.
4. Select **ON**/**OFF**/**Automatic** and then **SELECT**.
5. To return to the basic display, select **EXIT**.

4.2.6.5 Adjusting contrast

1. To open the **MAIN MENU**, press any arrow button.
2. To select **Display**, press the right arrow button.
3. Select **Contrast** and then **ADJUST**.
4. Adjust the contrast by pressing the left/right arrow buttons and **OK**.
5. To return to the basic display, select **EXIT**.

4.2.6.6 Using keypad lock

The function locks the keypad and prevents unintentional button strokes.

1. To lock the keypad, press and hold down the left function button for 4 seconds (at any display).
2. To unlock the keypad, press and hold down the **Open** button for 4 seconds.

4.2.7 Changing measuring settings

See the calculation formulas for pressure values in Calculation formulas (page 124).

To change the measuring settings:

1. To open the **MAIN MENU**, press any arrow button.
2. Select **Measuring** and press the right arrow button.
3. Select **Measuring settings** and press the right arrow button.
4. Select an option with up/down arrow buttons and select **SET**.
5. Press the left/right arrow buttons to move from a digit to another and then the up/down arrow buttons to enter a numeric value for the digit. Repeat the procedure until all the desired digits are set and select **OK**.
6. To return to the basic display, select **EXIT**.

4.2.8 Setting diagnostic settings

To set the diagnostic settings, use the display/keypad or the serial line commands **PSTAB** or **DPMAX**.

1. To open the **MAIN MENU**, press any arrow button.
2. Select **System** and press the right arrow button to confirm your selection.

3. Select **Diagnostics** and press the right arrow button to confirm your selection.
4. Select **Diagnostic Settings**.
5. Use the up/down arrow buttons to select **Stability**. Press **SET** to input the value. Use the left/right arrow buttons to move between the value and the unit. Set the value and the unit using the up/down arrow buttons. Press **OK** to confirm your choice.
6. Proceed as instructed in point 5 to set **Max. diff.**.
7. Press **SET** to confirm your selection.
8. To return to the basic display, select **EXIT**.

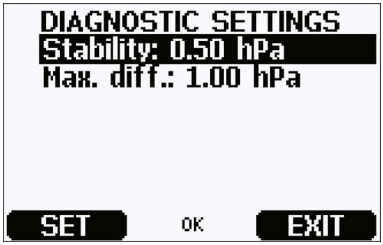

Use the display/keypad to check the stability of the pressure measurement. If concurrent pressure measurements differ less than the set value, the display outputs a small **OK** text.

Use the variable **OK** with the **FORM** command to show stability info in the serial output.

More information

- DPMAX command (page 74)
- PSTAB command (page 78)

4.2.9 Changing serial interface settings

You can change the communication settings for the user port through the serial line or by using the optional display/keypad. The communication settings for the service port are fixed and not changeable.

1. To open the **MAIN MENU**, press any arrow button.
2. Select **Interfaces** and press the right arrow button to confirm your selection.
3. Select **Serial Interface** and press the right arrow button to confirm your selection.
4. To select **Bit rate**/**Serial format**/**Comm. mode**, select **CHANGE**. Use the up/down arrow buttons and then **SELECT** to confirm your selection.
5. If you selected **RUN** for communication mode, select **RUN interval** and **SET** to confirm.
6. Use the arrow buttons to set the measuring interval and the unit. Press **OK** to confirm.
7. If you selected **POLL** for communication mode, select **POLL address** and **SET** to confirm.
8. Use the arrow buttons to set the barometer address. Select **OK** to confirm.

9. Use the arrow buttons to select **ECHO**. Select **ON** to turn it on or **OFF** to turn it off.
10. To return to the basic display, select **EXIT**.

The new user port settings set using the display/keypad are effective immediately.

4.2.10 System settings

More information

- Selecting language (page 54)
- Activating menu PIN lock (page 54)
- Restoring factory settings (page 55)
- Clearing graph displays (page 55)

4.2.10.1 Selecting language

1. To open the **MAIN MENU**, press any arrow button.
2. To select **System**, press the right arrow button.
3. Select **Language** (marked with a flag symbol), and then **SELECT**.
4. Select the menu language with up/down arrow buttons and then **SELECT**.
5. To return to the basic display, select **EXIT**.

More information

- System settings (page 54)

4.2.10.2 Activating menu PIN lock

You can prevent unauthorized changes to the device settings by activating the menu PIN lock. When the PIN lock is activated, the basic display and graphical view are available but access to the menus is locked. The key symbol indicates the activation of this feature.

1. To open the **MAIN MENU**, press any arrow button.
2. To select **System**, press the right arrow button.
3. Select **Menu PIN > OK**.
4. Type a PIN code by using the up/down arrow buttons. To confirm, select **OK**.

   The PIN lock is on and a key symbol is shown in the display.
5. To return to the basic display, select **EXIT**.

You can return to the menu by entering the correct PIN code.

To turn off PIN lock, type the PIN code and select **System > Menu PIN > OK**.

If you have forgotten the PIN code, open PTB330 cover and press the **ADJ** button once. Wait for a few seconds until the adjustment menu opens. Select **Clear menu PIN > CLEAR**.

You can also disable the keypad completely with the serial command **LOCK**.

More information

- LOCK command (page 84)
- System settings (page 54)

4.2.10.3 Restoring factory settings

Use the display/keypad to restore the factory settings. Restoring the factory settings does not affect the adjustments.

1. To open the **MAIN MENU**, press any arrow button.
2. To select **System**, press the right arrow button.
3. Select **Factory settings** and **REVERT** to confirm your selection. To reset all settings to factory settings, select **YES**.

   To exit the menu without making any changes, press **NO**.

   Factory settings only resets the settings available in the menus. It does not reset the advanced settings available through the serial line commands.

More information

- System settings (page 54)

4.2.10.4 Clearing graph displays

To delete recorded files, use the keypad/display.

PTB330 automatically overwrites the old data when the memory gets full. It is not necessary to delete files.

1. To open the **MAIN MENU**, press any arrow button.
2. To select **System**, press the right arrow button.

3. To clear graph memories, select **Clear graph memories > CLEAR**. Press **YES** to confirm.

> **CAUTION!** This function clears all the data history from the memory, all graphs included.

More information

- Data recording (page 85)
- System settings (page 54)

4.2.11 Relay settings

More information

- Setting relay outputs (page 56)
- Testing operation with menus (page 57)

4.2.11.1 Setting relay outputs

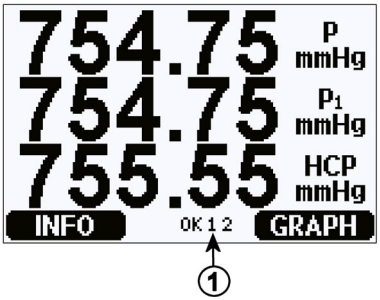

Figure 26 Relay indicators on display

1 List enabled relays. Activation state is shown in black. Disabled relays are not shown.

Use the display/keypad to set the relay outputs:

1. To open the **MAIN MENU**, press any arrow button.
2. Select **Interfaces** and press the right arrow button to confirm.
3. Select **Relay outputs** and press the right arrow button to confirm.
4. To select **Relay** 1/**Relay** 2 , press the right arrow button. Use the up/down arrow buttons to select the quantity. To confirm, select **SELECT**.

5. Select **Quantity** and press the **CHANGE** button. Select a quantity by using the up/down arrow buttons. To confirm, press **SELECT**.
6. Select **Act. above**/**Act. below** and press the **SET** button. If prompted, you may modify the value or remove the setpoint. Select **MODIFY** to adjust the value or **REMOVE** to clear the setpoint. Adjust the numeric values by pressing the up/down/left/right arrow buttons. To confirm, press **OK**.
7. Select **Hysteresis**. To adjust the value, select **SET** and select **OK**.
8. Select **Relay enable** and **ON**/**OFF** to enable/disable the relay.
9. To return to the basic display, select **EXIT**.

More information

- Relay setpoints (page 88)
- Relay settings (page 56)

4.2.11.2 Testing operation with menus

Testing activates relays even if they are disabled.

Use the module push buttons to activate the relays. Press the **REL 1** or **REL 2** button to activate the corresponding relay.

Relay status	Description
Relay is activated	Led is on
Relay is not activated:	Led is off

Use the display/keypad to test the operation of relays:

1. To open the **MAIN MENU**, press any arrow button.
2. To select **System**, press the right arrow button.
3. To select **Diagnostics**, press the right arrow button.
4. To select **Relay** tests, press the right arrow button.
5. To see the active relay or relays, select **Relay Output Status > SHOW**. To return to previous level, select **OK**.
6. Select **Test relay** 1 to test the output of relay 1. Select **ON**/**OFF** to activate/deactivate the output and **OK** to return to normal operation.
7. To test the output of relay 2, select **Test relay** 2. Select **ON**/**OFF** to activate/deactivate and **OK** to go back to normal operation.

8. To return to the basic display, select **EXIT**.

More information

- Relay settings (page 56)

4.2.12 Analog output settings

More information

- Testing operation of analog outputs (page 58)
- Setting analog output fault indication (page 58)

4.2.12.1 Testing operation of analog outputs

Use the display/keypad for testing the operation of the analog outputs by forcing the outputs to known values. Measure then the outputs with a current/voltage meter. To test the analog outputs:

1. Press any of the arrow buttons to open the **MAIN MENU**.
2. Select **System** and press the right arrow button.
3. Select **Diagnostics** and press the right arrow button.
4. Select **Analog output tests** and press the right arrow button.
5. Select **Analog output status**. Press the **SHOW** button to check the status and **OK** to finish.
6. Select **Test analog output** 1. Press **TEST**. Select one of the testing options by pressing the **0%**, **50%** or **100%** button.
7. Select **OK** to stop testing and return to the **Analog output tests** menu. Select **EXIT** button to return to the basic display.

More information

- Analog output settings (page 58)

4.2.12.2 Setting analog output fault indication

The factory default state for the analog outputs during error condition is 0 V/ 0 mA. Be careful when selecting the new error value. You must not enter an error value that can cause unexpected problems in process monitoring.

Use the display/keypad to set the analog output fault indication:

1. To open the **MAIN MENU**, press any arrow button.
2. Select **Interfaces** and press the right arrow button.
3. Select **Analog output** and press the right arrow button.
4. Select **Output** and press the right arrow button.

5. Select **Fault indication > SET**. button. Enter the fault indication value by using the arrow buttons and select **OK** to confirm. This value is the output if a barometer error occurs.
6. To return to the basic display, select **EXIT**.

More information

- Analog output settings (page 58)

4.3 Using MI70 Link Interface Software

You can transfer recorded data to a computer by using MI70 Link Interface Software. You can view the recorded data easily in the Windows environment and transfer it further to a spreadsheet program, such as Microsoft Excel or most Microsoft Office programs, in numeric or graphical format. The real-time window function of the MI70 link software allows you to monitor barometer readings directly with a computer.

The MI70 Link Interface Software is available from http://www.vaisala.com.

1. Connect the connection cable between the serial port of your computer and the service port of PTB330.
2. To start using the MI70 Link Software, make sure that PTB330 is powered up.

   The software detects the connection type automatically.

4.4 Serial line communication

Connect the serial interface by using either the user port or the service port.

For setting up a permanent interface to the host system, use the user port. You can change the serial settings and operate in RUN, STOP, and POLL modes.

For temporary RS-232 connections, use the service port. The service port is always available with fixed serial settings and, after power-up, it always starts in the STOP mode.

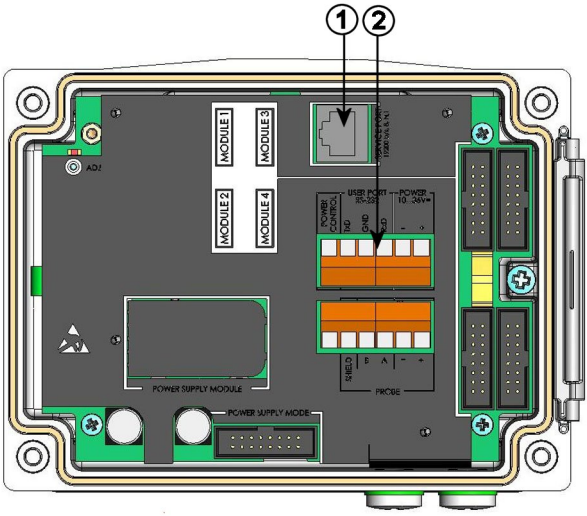

Figure 27 Service port connector and user port terminal on motherboard

1 Service port connector
2 User port terminals

More information

- Screw terminal connection (page 30)

4.4.1 User port connection

Use a suitable serial cable between the **RxD**, **GND**, and **TxD** screw terminals of the user port and the computer serial port.

> Do not use the user port when RS-485 module is connected.

Table 13 Default serial communication settings for the user port

Parameter	Value
Bit rate	4800
Parity	Even
Data bits	7

Parameter	Value
Stop bits	1
Flow control	None

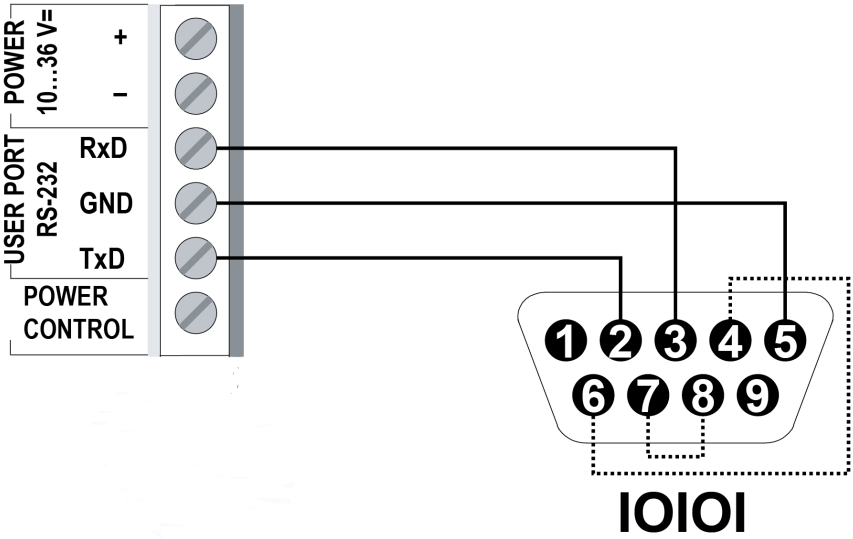

Figure 28 Connection example between PC serial port and user port

Connections to pins 4, 6, 7, and 8 on the computer serial port are required only if you are using software that requires hardware handshaking.

After power-up, the barometer (in STOP mode) displays the software version and the command prompt.

In RUN mode, a measurement output starts immediately after power-up.

4.4.2 Service port connection

Table 14 Communication settings for service port

Parameter	Value
Bit rate	19200
Parity	No

Parameter	Value
Data bits	8
Stop bits	1
Flow control	None

To create a service port connection:

1. Connect the serial interface cable (optional) between the serial port of your computer and the service port connector on the motherboard.
2. Open a terminal program and set the communication settings.
3. Power up the barometer.

4.4.3 Opening serial and USB connection

Perform the necessary cabling and configuration of the transmitter.

1. Power up PTB330 and start the PuTTY application.
2. In **Serial & USB > Serial or USB line to connect to** check that the correct COM port is selected. Change if necessary.

If you are using a Vaisala USB cable, you can check the port that it uses by clicking the **USB Finder** button. This opens the Vaisala USB Instrument Finder program installed with the USB drivers.

3. In **Configure the serial/USB line**, check that the other serial/USB line settings are correct for your connection, and change if necessary. For the default settings of PTB330 service port, see Table 14 (page 61).

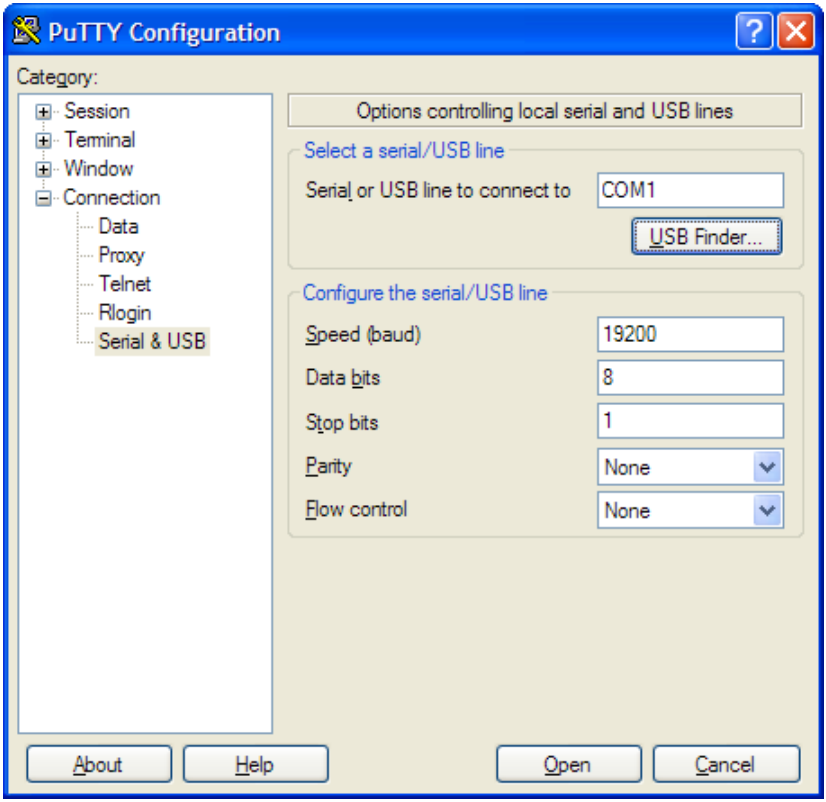

4. To open the connection window and start using the serial line, select **Open**.

   If PuTTY is unable to open the serial port you selected, it displays an error message. Restart PuTTY and check the settings.

4.5 PTB330 serial commands

Type the command and press **Enter**.

Table 15 General commands

Command	Allowed values	Description
BNUM		Shows the device and module batch numbers.
SERI		Shows or sets the serial port settings for the user port.
SNUM		Shows the device and module serial numbers.
ERRS		Shows all unacknowledged errors (and clears them).
HELP		Shows the available commands.
LOCK		Shows or sets the keyboard lock.
?		Outputs information on the device.
ECHO	ON, OFF Default value **ON**.	Shows or sets the serial interface echoing.
RESET		Resets the device.
VERS		Displays the product name and software version number.
SNUM		Shows the device and module serial numbers.
MODS		Acknowledges added or removed modules.
CON		Adjusts display contrast.

Table 16 Measurement commands

Command	Allowed values	Description
R		Changes the serial mode to RUN and starts displaying measurement results according to the **FORM** string (with interval defined by **INTV**).
INTV	0–255 s/min/h/d	Shows or sets the continuous output interval (for RUN mode).
SEND	0–255	Shows the measurement results according to the configured form.
SMODE	STOP/POLL/RUN/SEND/PA11A Default value **STOP**	Shows or sets the start mode.
SDELAY	0–254 (0–2540 ms)	Shows or sets the answer delay for the serial line in tens of milliseconds.
ADDR	0–255	Sets the barometer address.
OPEN	0–255	Opens communications after the **CLOSE** command.

Command	Allowed values	Description
CLOSE		Closes communications until the **OPEN** command is entered.
SCOM		Shows or sets an alias (a user-specific form) for the **SEND** command. The given alias cannot be a command already in use.

Table 17 Measurement setting commands

Command	Allowed values	Description
TQFE	−80 ... +200 °C	Shows or sets the temperature for QFE corrected pressure.
DPMAX	0–9999.99 hPa	Shows or sets the maximum permissible difference pressure between barometer modules.
HHCP	−30 ... +30 m	Shows or sets the altitude for height corrected pressure.
HQFE	−30 ... +30 m	Shows or sets the altitude for the QFE corrected pressure.
HQNH	−30 ... +3000 m	Shows or sets the altitude for the QNH corrected pressure.
PSTAB	0–9999.99 hPa	Shows or sets the pressure stability limits.
AVRG	0–600 s	Sets the barometer measurement averaging time (in seconds).

Table 18 Formatting commands

Command	Description
FORM	Sets the custom output for the **SEND** command and for RUN mode.
TIME	Shows or changes the current time.
DATE	Shows or changes the current date.
UNIT	Shows or sets unit for a quantities.

Table 19 Data recording commands

Command	Description
DSEL	Selects the quantities that are displayed on the graphical user interface as well as quantities for data recording.
DELETE	Erases the log memory.
UNDELETE	Restores the erased log memory.

Command	Description
DIR	Lists the available logs in the logging memory.
PLAY	Shows the trend, min, and max values of the given log.

Table 20 Calibration and adjustment commands

Command	Description
CDATE	Shows or sets the calibration date.
LCP1/**LCP2**/ **LCP3**	Performs a linear adjustment for the barometer module/module.
MPCP1/**MPCP2**/ **MPCP3**	Performs a multipoint adjustment for the barometer module/module.
CTEXT	Shows or sets the calibration info text.

The calibration and adjustment commands are available in adjustment mode only. Press the adjustment button before typing the following commands.

Table 21 Setting and testing the analog outputs

Command	Description
AMODE	Displays the analog output mode (if an AOUT-1 module is connected).
ASEL	Sets the analog output quantity and scaling (low/high).
ACAL	Adjusts the analog output.
AERR	Sets the analog output error value.
ATEST	Starts/ends an analog output test.

Table 22 Setting and testing the relays

Command	Description
RSEL	Sets the relay scaling (if a RELAY-1 module is connected).
RTEST	Starts/ends a relay output test.

4.6 General settings

4.6.1 Quantities and units

You can only select quantities you selected when ordering PTB330 as a display output quantity.

More information

- Displaying air pressure tendency (page 48)

4.6.1.1 FORM command

Use the serial line command **FORM** to change the format or define quantities for the output command **SEND** and for RUN mode.

```
FORM [x]
```

Parameter	Description
x	Formatter string

The formatter string consists of quantities and modifiers. The following table lists **FORM** modifiers.

Table 23 FORM modifiers

Modifier	Description
/	Restores the default output message (depends on the device configuration). Used alone.
??	Displays list of supported parameters. Used alone.
0.0	Reverts back to the default number format per each quantity.
x.y	Length modifier (number of digits and decimal places).
quantity	Quantity value or * characters if not available.
U	Unit symbol as it is (width depends).
U1 to U9	Unit symbol in the specified number of characters (truncated or space filled as necessary).
“xxx”	String constant (free text).

Modifier	Description
`#N` `\N`	Line feed character <0x0A>.
`#R` `\R`	Carriage return character. <0x0D>.
`#RN` `\RN`	Carriage return and line feed characters. <0x0D><0x0A>.
`#T` `\T`	Horizontal tabulator character <0x09>.
`#0 … #255` `\0 … \255`	Data byte with the specified decimal value.
`ADDR`	Device address (left-filled with spaces).
`CS2`	Modulus-256 checksum of message sent so far, hexadecimal format.
`CS4`	Modulus-65536 checksum of message sent so far, hexadecimal format.
`CSX`	NMEA XOR checksum of message sent so far, hexadecimal format.
`DATE`	Date in format yyyy-mm-dd.
`ERR`	Error flags for P_1, P_2, and P_3 (if installed, right-filled with spaces); 0 = no error, 1 = error.
`MCTR`	Running counter for pressure measurement.
`PSTAB`	Pressure stability indicator (OK or 2 spaces).
`RDTIME`	Time in format hh:mm:ss.ss.
`SN`	Device serial number.
`TIME`	Time in format hh:mm:ss.

Checksums are calculated as follows.

$$cs_2 = \sum_{i=1}^{n} \bmod 256$$

$$cs_4 = \sum_{i=1}^{n} b_1 \bmod 65536$$

$$cs_x = \mathrm{b}'_1 \oplus \mathrm{b}'_2 \oplus \ldots \oplus \mathrm{b}'_n$$

$$b'_1 = b'_1 if\ b'_1 \neq 36\ and\ b'_1 \neq 42$$

$$b'_1 = 0\ if\ b'_1 = 36\ or\ b'_1 = 42$$

Table 24 Symbols used in FORM checksum equations

Symbol	Description
cs_2	Value of CS2 checksum in the output message.
cs_4	Value of CS4 checksum in the output message.
cs_x	Value of CSX checksum in the output message.
b_i	Value of the byte at position i (1-based) in the output message.
n	Number of bytes in the output message before the CS2, CS4, or CSX field (including earlier checksum fields, if any).
⊕	Bit-wise exclusive-or operator.
36	Byte value of ASCII $ character.
42	Byte value of ASCII * character.

Table 25 Quantity symbols

Product	Quantity symbols
PTB330 with 1×BARO-1	P P3H P1 HCP QFE QNH TP1 A3H
PTB330 with 2×BARO-1	P P3H P1 P2 DP12 HCP QFE QNH TP1 TP2 A3H
PTB330 with 3×BARO-1	P P3H P1 P2 P3 DP12 DP13 DP23 HCP QFE QNH TP1 TP2 TP3 A3H

The command **FORM /** returns the default output format. The default output format depends on the device configuration.

Query syntax and output example:

```
>FORM ?
Output format  : P \RN
>SEND
 999.92
>
```

Prompt syntax and output example:

```
>FORM
Output format  : P \RN
? 4.0 P " " U \T 0.0 P1 \T P2 \T P3 \RN
Output format  : 4.0 P " " U \T 0.0 P1 \T P2 \T P3 \RN
>SEND
1000 hPa 999.93 999.81 999.86
>
```

Command line syntax and output example:

```
>FORM DATE \T TIME \T P \T ERR \RN
Output format  : DATE \T TIME \T P \T ERR \RN
>SEND
2000-01-0100:01:54 999.88000
>
```

Restoring the default output message (depends on the device configuration) and output example:

```
>FORM /
Output format  : QNH \T QFE \R \N
>SEND
 999.88 999.88
>
```

Displaying information on supported parameters (depends on the device configuration):

```
>FORM ??
P P3H P1 P2 P3 DP12 DP13 DP23 HCP QFE QNH TP1 TP2 TP3 A3H
Additional parameters
#T, #R, #N, #RN, Un, n.n, CS2, CS4, CSX, SN, ERR, PSTAB, ADDR, DATE, TIME
>
```

4.6.1.2 UNIT command

Use the **UNIT** command to display or set the output quantities and their units.

Table 26 Output quantities and units

Quantity	Output quantity	Available output units
Pressure (measures average pressure from P_1, P_2, and P_3)	P	hPa, psi, inHg, torr, bar, mbar, mmHg, kPa, Pa, mmH_2O, inH_2O
Pressure from barometer module 1, 2 or 3	P_1, P_2, and P_3	
Pressure trend	P_{3h}	
Pressure difference ($P_1 - P_2$)	ΔP_{12}	
Pressure difference ($P_1 - P_3$)	ΔP_{13}	

Quantity	Output quantity	Available output units
Pressure difference ($P_2 - P_3$)	ΔP_{23}	
QNH pressure	QNH	
QFE pressure	QFE	
Height corrected pressure	HCP	
Temperature of barometer module 1 or 2 or 3	T_{P1}, T_{P2}, and T_{P3}	°C, °F, K

```
UNIT [x] [y]
```

Parameter	Description
x	Output quantity
y	Output unit

Use the **UNIT** command to change the measurement unit for the quantities. The output consists of all the measured quantities of the unit you enter as variable [y].

Example:

```
>unit Pa
P               : Pa
P3h             : Pa
P1              : Pa
P2              : Pa
DP12            : Pa
HCP             : Pa
QFE             : Pa
QNH             : Pa
>
```

To change the measurement unit for a specific quantity, use the **UNIT** command with a quantity symbol. Set the quantity and the desired unit.

Example:

```
>unit P mmhg
P               : mmHg
P3h             : Pa
P1              : Pa
P2              : Pa
DP12            : Pa
HCP             : Pa
QFE             : Pa
QNH             : Pa
>
```

The command changes both the serial output and display units.

To list the available measurement units for the quantities, use the **UNIT ??** command.

4.6.1.3 DATE and TIME commands

The system date is always reset to 2000-01-01 when you power up PTB330.

The accuracy of **DATE** and **TIME** is limited. The system date/time is only intended for short-duration timekeeping.

```
DATE [?] [x]
```

Parameter	Description
?	Displays the current date set to the device.
x	Date (format: yyyy-mm-dd)

Query syntax:

```
>DATE ?
Date            : 2000-01-01
>
```

Prompt syntax:

```
>DATE
Date            : 2000-01-01 ? 2012-08-27
Date            : 2012-08-27
>
```

Command line syntax:

```
>DATE 2012-08-28
Date            : 2012-08-28
>
```

The system time is always reset to 0:00:00 when you switch the power on to the device. The system uses a 24-hour clock.

```
TIME [?] [x]
```

Parameter	Description
?	Displays the current time set to the device.
x	Time (format: hh:mm:ss)

Query syntax:

```
>TIME ?
Time            : 00:01:51
>
```

Prompt syntax:

```
>TIME
Time            : 00:01:55 ? 9:22:45
Time            : 09:22:45
>
```

Command line syntax:

```
>TIME 9:23:09
Time            : 09:23:09
>
```

4.6.2 Measurement commands

4.6.2.1 TQFE command

Use the **TQFE** command to show or set the temperature for QFE corrected pressure. The valid range of QFE temperature is −80 ... +200 °C.

```
TQFE [?] [x] [y]
```

Parameter	Description
?	Displays the current QFE temperature. You cannot use this modifier with the other modifiers.
x	Numeric value (temperature). Ranges: • -80 ... 200 °C • -110 ... 390 °F • 190 ... 470 K
y	Temperature scale used. Values: • C • F • K

Examples

Query syntax:

```
>TQFE ?
QFE temp.      : 20.00 'C
>
```

Prompt syntax:

```
>TQFE
QFE temp.      : 20.00 'C ? 70 'F
>
```

Command line syntax:

```
>TQFE 300 K
QFE temp.      : 300.00 K
>
```

4.6.2.2 DPMAX command

The serial line command **DPMAX** shows or sets the maximum difference pressure allowed between barometer modules. The command is only available if more than one barometer module has been installed.

```
DPMAX [x] [y] [?]
```

Parameter	Description
x	Pressure
y	Unit

Example

```
>dpmax 0.2
Max. diff.     : 0.20 hPa
>
```

If the defined value is exceeded, the relevant digits in the `ERR` field change from 0 to 1, and the corresponding pressure measurement(s) are no longer included in the average pressure reading.

Vaisala recommends using the `ERR` field as part of the **FORM** command definition if there are 2 or 3 pressure transducers in PTB330.

The following basic cases may occur for barometers with 2 or 3 pressure transducers (only the differences found between the readings from the pressure transducers are important):

			P high
	P high		≤ DPMAX ?
2 transducers:	≤ DPMAX ?	3 transducers:	P middle
	P low		≤ DPMAX ?
			P low

For an acceptable measurement crucial conditions are:

- 2 transducers: P high - P low ≤ DPMAX
- 3 transducers: P high - P middle ≤ DPMAX and P middle - P low ≤ DPMAX.

The factory setting for DPMAX is 1 hPa.

Example of setting the limit to 0.5 hPa:

```
>dpmax <cr>
Pd max        :    1.000 ? 0.5 <cr>
>
```

Use the **ERRS** command to analyze problems.

4.6.2.3 AVRG command

Use the **AVRG** command to set PTB330 measurement averaging time (in seconds). Valid range of averaging time is 1–600 seconds or 0, which disables the measurement averaging function.

```
AVRG [x] [?]
```

Parameter	Description
x	Average time

Example

```
>avrg
Average filter : 1 s ?
>
```

4.6.2.4 HHCP command

The **HHCP** command shows or sets the altitude for height corrected pressure. The valid range of HCP height is −30 ... 30 m.

```
HHCP [?] [x] [y]
```

Parameter	Description
?	Displays the current altitude offset for HCP calculation. You cannot use this modifier with the other modifiers.
x	Numeric value (altitude). Ranges: −30 ... 30 m, −99 ... 99 ft.
y	Distance scale used. Values: m, ft

4.6.2.5 HQFE command

The **HQFE** command displays or sets altitude for QFE corrected pressure. The valid range of QFE height is −30 ... +30 m.

```
HQFE [?] [x] [y]
```

Parameter	Description
?	Displays the current altitude offset for QFE calculation. You cannot use this modifier with the other modifiers.
x	Numeric value (altitude). Ranges: −30 ... 30 m, −99 ... 99 ft.
y	Distance scale used. Values: m, ft

More information

- Calculation formulas (page 124)

4.6.2.6 HQNH command

The **HQNH** command displays or sets altitude for QNH corrected pressure. The valid range of QNH height is −30 ... +3000 m.

```
HQNH [?] [x] [y]
```

Parameter	Description
?	Displays the current altitude offset for QNH calculation. You cannot use this modifier with the other modifiers.
x	Numeric value (altitude). Ranges: • −30 ... 3000 m • −99 ... 9900 ft

Parameter	Description
y	Distance scale used. Values: • m • ft

More information

- Calculation formulas (page 124)

4.6.2.7 ICAOQNH command

The **ICAOQNH** command selects the calculation formula and rounding method used for QNH and QFE calculations.

```
ICAOQNH [?] [ON/OFF]
```

Parameter	Description
?	Displays the current **ICAOQNH** status.
ON	ICAO QNH calculation formula, QNH and QFE values rounded down to nearest integer. Only units hPa and mmHg are available for QNH and QFE.
OFF	Default QNH calculation formula, no rounding other than specified with the **FORM** command. See FORM command (page 67). All pressure units for QNH and QFE are available.

Although **ICAOQNH** is ON, you can use the **FORM** command to force the display of decimal places on QNH and QFE values. Because of **ICAOQNH** rounding, these decimal places are always filled with zeros.

Query syntax:

```
>ICAOQNH ?
ICAO QNH        : OFF
>
```

Prompt syntax:

```
>ICAOQNH
ICAO QNH        : OFF ? ON
>
```

Command line syntax:

```
>ICAOQNH OFF
ICAO QNH       : OFF
```

>

More information

- Calculation formulas (page 124)

4.6.2.8 PSTAB command

Use the **PSTAB** command to define the pressure stability indicator reflecting maximum allowed pressure difference between 2 successive averaged pressure measurements.

In addition to defining the pressure stability indicator, you must also define the **FORM** command to include the `OK` stability indicator field.

Adding a PSTAB element to the FORM string enables checking the stability using the serial port. The factory setting for the stability indicator level is 0.5 hPa.

```
PSTAB [?] [x] [y]
```

Parameter	Description
?	Displays the current pressure stability indicator. You cannot use this modifier with the other modifiers.
x	Numeric value (pressure). Ranges: 0–9999.99 (hPa) 0–99.9999 (psi) 0–999.999 (inHg) 0–9999.99 (torr) 0–9.99999 (bar) 0–9999.99 (mbar) 0–9999.99 (mmHg) 0–999.999 (kPa) 0–999999 (Pa) 0–9999.99 (inH_2O) 0–99999.9 (mmH_2O)

Parameter	Description
y	Pressure scale used. Values: hPa psi inHg torr bar mbar mmHg kPa Pa mmH_2O inH_2O

Examples:

Query syntax:

```
>PSTAB ?
P stab.        : 1.00 hPa
>
```

Prompt syntax:

```
>PSTAB
P stab.        : 0.5 psi ? 1.5 HPA
>
```

Command line syntax:

```
>PSTAB 0.5 PSI
P stab.        : 0.5 psi
>
```

The pressure stability indicator is useful as it indicates instability in the pressure measurement. The pressure instability may result from different reasons depending on the application:

- In outdoor barometric pressure measurement, high wind speeds can induce notable pressure instability.
- Building automation systems may also introduce pressure fluctuations, and for example opening the door of a room can often result in temporary pressure instability.

4.6.3 User port serial settings

Use the commands described in this section to configure the user port serial settings.

4.6.3.1 SDELAY command

With the **SDELAY** command you can set delay (response time) for the user port (RS-232 or RS-485), or view currently set delay value. Value corresponds to tens of milliseconds (for example, 5 = 0.050 s minimum answer delay). The value can be set between 0–254. Example:

```
>sdelay
Serial delay   : 0 ? 10
>sdelay
Serial delay   : 10 ?
```

4.6.3.2 SERI command

Use the serial line command **SERI [b p d s]** to set communication settings for the user port.

```
SERI [b p d s]
```

Parameter	Description
b	Bit rate (110, 150, 300, 600, 1200, 2400, 4800, 9600,19200, 38400, 57600, 115200, 230400)
p	Parity (n = none, e = even, o = dd)
d	Data bits (7 or 8)
s	Stop bits (1 or 2)

Example:

```
>seri
Baud P D S     : 9600 N 8 1
>
```

You must reset the barometer to activate the new communication settings set with the **SERI** command.

The settings can be changed one parameter at a time or all parameters at once:

```
>seri
Baud P D S     : 9600 N 8 1
>seri o
Baud P D S     : 9600 O 8 1
>
```

4.6.3.3 SMODE command

Use the **SMODE** command to set the user port startup operating mode.

```
SMODE [x]
```

Parameter	Description
x	STOP, RUN, POLL, SEND, or PA11A

Table 27 Selection of output modes

Value	Description
STOP	Use STOP protocol on the user port by default.
RUN	Use RUN protocol on the user port by default.
POLL	Use POLL protocol on the user port by default.
SEND	Use SEND protocol on the user port by default.
PA11A	Use STOP protocol with fixed PA11A output message on the user port by default.

To exit the output listing, press **Esc**.

The output mode you selected is activated after power outages.

4.6.3.4 INTV command

Use the **INTV** command to set the outputting interval for the RUN mode.

```
INTV [xxx yyy]
```

Parameter	Description
xxx	Output interval (0–255). 0: the fastest possible output rate.
yyy	Unit (s, min, h, or d)

Example

```
>intv 10 min
Output interval :  10 min
>
```

4.6.3.5 ECHO command

Use the **ECHO** command to set the user port echo. The command enables or disables echo of characters received.

```
ECHO [x] [y]
```

Parameter	Description
x	ON (default) or
y	OFF

The **SERI**, **SMODE**, and **ECHO** commands change/view the user port settings even if you are currently connected to the service port.

Example

```
>echo off
Echo     : OFF
sendpressure = 1013.00 hPa
echo on
Echo     : ON
>
```

4.6.4 System information commands

4.6.4.1 ? command

Use the serial line command **?** to check the current barometer configuration. Command **??** can also be used if PTB330 is in POLL mode.

Example

```
>?
PTB330 / 1.01
Serial number   : A1234567
Batch number    : B8901234
Output format   : P #T P1 #T P2 #T DP12 #T QFE #RN
Adjust. date    : 2007-05-03
Adjust. info    : VAISALA
Date            : 2007-05-08
Time            : 13:42:01
Start mode      : STOP
Baud P D S      : 4800 E 7 1
Output interval: 1 s
Address         : 0
Echo            : ON
Module 1        : BARO-1
Module 2        : BARO-1
Module 3        : BARO-1
Module 4        : EMPTY
>
```

4.6.4.2 ERRS command

Use the command **ERRS** to display all current device errors, unacknowledged errors, and error log contents.

An error is active if the cause for the error is still present when you execute the **ERRS** command. If the cause disappears, the error message changes to the unacknowledged state. An unacknowledged error is an error message that has not yet been displayed to the user.

Unacknowledged errors are automatically cleared when they are displayed with **ERRS** command or with the optional display and keypad.

> Because **ERRS** command does not display any difference between present and past errors, execute **ERRS** twice in a row to see which ones are still present (past errors are not displayed anymore on the second **ERRS** response).

Table 28 ERRS command line parameters

Value	Description
(no parameter)	Displays currently active and past, unviewed (unacknowledged) errors.
LOG	Shows error log contents.
BARO	Shows detailed error information for pressure transducer errors.

Example

```
>errs
PASS
No errors
>errs
FAIL
Error: Operating voltage out of range.
>
```

4.6.4.3 VERS command

Use the command **VERS** to display the software version of PTB330.

```
>VERS
MT300 / 1.13
>
```

4.6.5 Resetting barometer by using serial line

4.6.5.1 RESET command

The **RESET** command resets the device. After the reset, the user port switches to the startup output mode selected with the **SMODE** command.

Example:

```
>reset

PTB330 / 1.04
>
```

4.6.6 Locking menu/keypad by using serial line

4.6.6.1 LOCK command

Use the **LOCK** command to display or turn on the menu lock with a 4-digit PIN code, for example 4444.

```
LOCK [x yyyy]
```

Parameter	Description
x	1 (menu locked)
yyyy	4-digit PIN code

Example:

```
>lock 1 4444
Keyboard lock  : 1 [4444]
>
```

Use the **LOCK** command to turn on the menu lock without PIN code access possibility while retaining access to **INFO** and **GRAPH** buttons.

```
LOCK [x]
```

Parameter	Description
x	1 (Menu locked)

Example:

```
>lock 1
Keyboard lock  : 1
>
```

Use the **LOCK** command to disable the keypad completely.

```
LOCK [x]
```

Parameter	Description
x	2 (Keypad disabled)

Example:

```
>lock 2
Keyboard lock  : 2
>
```

Open the locks with the serial command **LOCK 0**. You can open the menu lock also by using the keypad, if a PIN code has been set.

4.7 Data recording

Data recording function is always on and collects data automatically in the device memory. Recorded data do not disappear from the memory when the power is switched off. Collected data can be observed in a form of a graph in the graphical view of the display or it can be listed out by using the serial connection or MI70 Link Interface Software.

More information

- Clearing graph displays (page 55)

4.7.1 Selecting data recording quantities

If your PTB330 has the optional display, the recorded quantities are always those selected for the display. Up to 4 quantities can be recorded at a time.

More information

- Changing quantities (page 50)

4.7.1.1 DSEL command

Use the serial line command **DSEL** to select the quantities to be recorded if the barometer is not equipped with display/keypad. The maximum number of recorded quantities is 4.

```
DSEL [xxx]
```

Parameter	Description
xxx	Data recording quantities, see Table 3 (page 10).

Example:

```
>dsel p HCP
P HCP
>
```

Type the command without parameters and press **Enter** to display current recording parameters.

If you select P_{3h}, P is recorded instead.

4.7.2 View recorded data

If your PTB330 has the optional display, the graphical display shows the data of the selected quantities, one at a time. See section Graphic history (page 48) for details about graphical display.

You can also dump the logged data to the serial line in numeric form with the following commands: **DIR**, **PLAY**, and **DELETE**/**UNDELETE**.

4.7.2.1 DIR command

Use the serial line and type the **DIR** command to list the logged data files.

PTB330 records 6 files (6 observation periods) for each selected quantity. The total amount of the files depends on the amount of the selected quantities being at minimum 6 and at maximum 24. See Table 11 (page 49).

The timestamps provided by the **DIR** command are based on the current system date and time. To see correct timestamps, make sure that the system date and time is set to correct values with **DATE** and **TIME** commands before using the **DIR** command.

Select, for example, 2 quantities (P and P_1).

Example:

```
>dir
File description              Oldest data available    No. of points
1  P latest 20 minutes             2000-01-08 03:44:30     135
2  P latest 3 hours                2000-01-08 00:44:30     135
3  P latest 1 day                  2000-01-07 01:07:00     135
4  P latest 10 days                1999-12-27 22:07:00     135
5  P latest 2 months               1999-11-01 16:07:00     135
6  P latest 1 year                 1998-11-29 04:07:01     135
7  P1 latest 20 minutes            2000-01-08 03:44:31     135
8  P1 latest 3 hours               2000-01-08 00:44:31     135
9  P1 latest 1 day                 2000-01-07 01:07:01     135
10 P1 latest 10 days               1999-12-27 22:07:01     135
11 P1 latest 2 months              1999-11-01 16:07:01     135
12 P1 latest 1 year                1998-11-29 04:07:01     135
>
```

More information

- DATE and TIME commands (page 72)

4.7.2.2 PLAY command

Use the **PLAY** command to output the selected file to the serial line. The command prints **trend** and **max/min** values from the given log. Use the **DIR** command to find out what log index number corresponds to a particular log. Data in the output is delimited with TAB characters. This is compatible with most spreadsheet programs. Before typing the command, set the correct date and time with **TIME** and **DATE** commands, if needed.

```
PLAY [x]
```

Parameter	Description
x	1–24

You can use the **PLAY 0** command to output all files one after another.

Example:

```
>play 4
P latest 10 days                2000-12-20 18:31:17     135
Date        Time        trend     min      max
yyyy-mm-dd hh:mm:ss     mbar      mbar     mbar
2000-12-21 20:31:17     974.22    972.83   975.21
2000-12-21 22:31:17     976.45    975.21   977.73
2000-12-22 00:31:17     979.29    977.69   980.94
.
.
>
```

The **Esc** key can be used to interrupt the output listing.

4.7.2.3 DELETE/UNDELETE command

Use the serial line to clear or restore the data files.

Use the **DELETE** command to clear all data files. Use the **UNDELETE** command to recover the deleted data.

> The **UNDELETE** command only recovers the part of the deleted data that has not been recorded over yet.

4.8 Operating relays

A relay monitors the quantity chosen for the relay output. Any of the quantities available can be chosen.

More information

- Relay module (RELAY-1L) (page 39)

4.8.1 Relay setpoints

When the measured value is in between the above and below values, the relay is passive. When choosing a lower value as above value and a higher value as below value, the relay is passive when the measured value is not between the setpoints. You can also set only 1 setpoint. See the following figure for illustrative examples of the different measurement-based relay output modes.

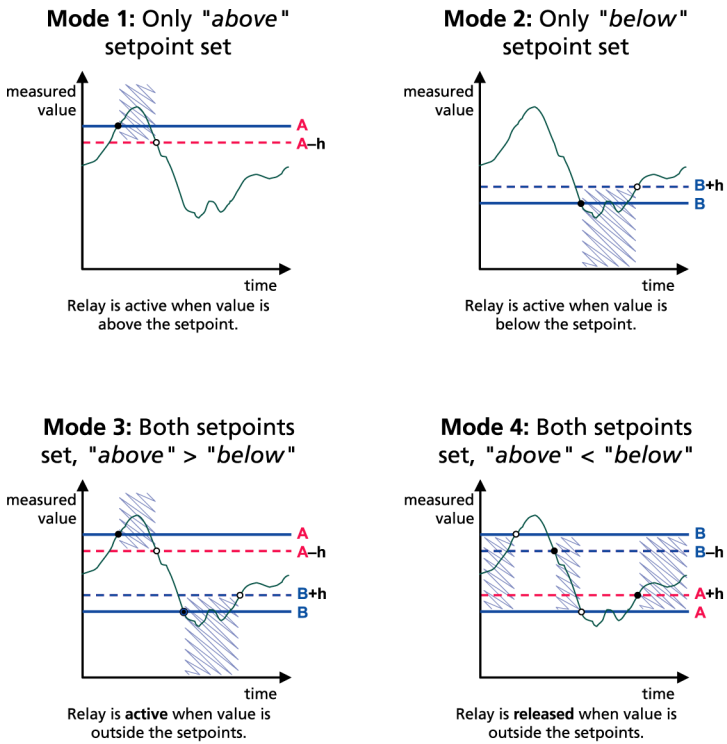

Legend			
A	"*Active above*" setpoint value	▨	Relay is active (**NO – C** connected)
B	"*Active below*" setpoint value	•	Relay is activated
h	Hysteresis value	○	Relay is released

Figure 29 Relay output modes

Mode 4 is usually used if an alarm needs to be triggered when the measured value exceeds a safe range. The relay is active when measurement is in range, and is released if the value goes out of range or a power outage occurs.

If the measurement of the selected quantity fails or the barometer loses its power, the relay is released.

More information

- Setting relay outputs (page 56)

4.8.2 Hysteresis

The hysteresis function prevents the relay switching back and forth when the measured value is near to the setpoint values. The relay is activated when the measured value passes the exact value of the setpoint. When returning to and passing through the setpoint again, the relay is not released before the value reaches the setpoint increased/decreased by the hysteresis value, see Figure 29 (page 89). The hysteresis must be smaller than the difference of the setpoints.

If both setpoints are specified and the "above" setpoint is lower than the "below" setpoint, the hysteresis works in the opposite direction, that is, the relay is released when the measured value passes the exact value of the setpoint.

4.8.3 Relay indicating barometer error status

You can set a relay to follow the operation status of the device. By selecting **FAULT STATUS** for output quantity a relay changes state on the basis of the operation status as follows:

FAULT STATUS

Normal operation: relay active (C and NO outputs are closed)

Not measuring state (error state): relay released (C and NC outputs are closed).

See the following figure for an illustrative example of the FAULT STATUS relay output mode.

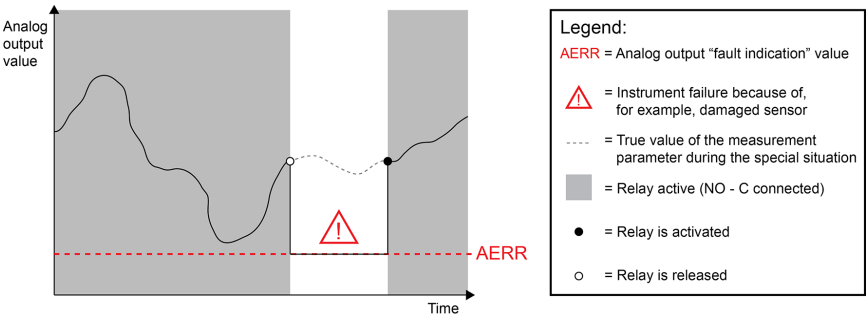

Figure 30 FAULT STATUS relay output mode

FAULT STATUS relay is usually used in conjunction with an analog output to obtain validity information for the output value.

> If a barometer loses its power, all status-based relays are released similarly to the case of an instrument failure.

4.8.4 Enabling/disabling relays

You can deactivate the relay outputs for example for service purposes of your system.

4.8.5 RSEL command

Use the serial line to select the quantity, setpoints, and hysteresis or enable/disable the relay outputs. The factory setting is that all the relays are disabled. Type the **RSEL** command.

```
RSEL [q1 q2...]
```

Parameter	Description
q1	Quantity for the relay 1 or Fault
q2	Quantity for the relay 2 or Fault
and so on	

Use the quantity abbreviations presented in Table 3 (page 10).

Example of window limit switch:

Selecting relay 1 to follow pressure measurement and relay 2 to follow measurement of pressure from barometer module 1. Two relay setpoints are set for both relays.

```
>rsel P P1
Rel1 P    below: 980.00 hPa ?
Rel1 P    above: 995.00 hPa ?
Rel1 P    hyst : 0.10 hPa ?
Rel1 P    enabl: ON ? ?
Rel1 P1   below: 1001.00 hPa ?
Rel1 P1   above: 1005.00 hPa ?
Rel1 P1   hyst : 0.10 hPa ?
Rel1 P1   enabl: ON ?
>
```

Example of normal limit switch:

Selecting relay 1 to follow pressure measurement and relay 2 to follow measurement of pressure from barometer module 1. One setpoint is chosen for both outputs.

```
>rsel P P1
Rel1 P    below: 980.00 hPa ? -
Rel1 P    above: 995.00 hPa ? 1020
Rel1 P    hyst : 0.10 hPa ? 1
Rel1 P    enabl: ON ? ON
Rel1 P1   below: 1001.00 hPa ? -
Rel1 P1   above: 1005.00 hPa ? 1010
Rel1 P1   hyst : 0.10 hPa ? 2
Rel1 P1   enabl: ON ? ON
>
```

Example of using relay 1 as fault alarm:

Selecting relay 1 to follow the fault status and relay 2 to follow the pressure measurement.

```
>rsel fault p
Rel1 FAUL below: -
Rel1 FAUL above: -
Rel1 FAUL hyst : -
Rel1 FAUL enabl: ON ?
Rel2 P    below: - ? -
Rel2 P    above: 1050.00 hPa ? 1050
Rel2 P    hyst : 12.00 hPa ? 10
Rel2 P    enabl: ON ? ON
>
```

4.8.6 Testing operation of relays

If a relay module is installed on PTB330, you can use either the optional display and menus or the serial line command **RTEST** to test the operation of relays. For testing with menus see Testing operation with menus (page 57).

Testing activates relays even if they are disabled.

Use the module push buttons to activate the relays. Press the **REL 1** or **REL 2** button to activate the corresponding relay.

Relay status	Description
Relay is activated	The LED is on.
Relay is not activated	The LED is off.

4.8.7 RTEST command

Use the serial line command **RTEST** to test the operation of the relays.

```
RTEST [x1 x2]
```

Parameter	Description
x	ON/OFF

Example: use the **RTEST** command to activate and then release the relays.

```
>rtest on on
ON ON
>rtest off off
OFF OFF
>
```

To stop testing, type **RTEST** without parameters.

4.9 Operating RS-485 module

RS-485 interface enables communication between RS-485 network and the barometer. The RS-485 interface is isolated and offers a maximum communications rate of 115 200 bit/s. For the maximum bus length of 1 km, use bit rate 19 200 bit/s or less.

When selecting RS-232-RS-485 converters for the network, avoid self-powered converters as they do not necessarily support the needed power consumption.

When the RS-485 module is connected, the user port on the barometer main board cannot be used. Service port operates normally.

4.9.1 Networking commands

You can set the RS-422/485 interface by using the following commands.

You can enter the RS-485 configuration commands **SERI**, **SMODE POLL**, **ADDR**, **SDELAY**, and **SCOM** by using either the service port or the RS-422/485 port. You can also use the optional display/keypad. See sections Changing serial interface settings (page 53) and User port serial settings (page 79).

After the network setup, you can open and close the connection to PTB330 with the **OPEN** and **CLOSE** commands. You can also use the **SEND** command to display the reading once in POLL mode.

4.9.1.1 ADDR command

Addresses are required only for POLL mode (see serial line command SMODE command (page 80)). Use the **ADDR** command to input the RS-485 barometer address.

```
ADDR [aa]
```

Parameter	Description
aa	Address (0–255) (default = 0)

Example:

PTB330 is configured to address 99.

```
>ADDR
Address : 2 ?  99
>
```

4.9.1.2 SDELAY command

With the **SDELAY** command you can set delay (response time) for the user port (RS-232 or RS-485), or view currently set delay value. Value corresponds to tens of milliseconds (for example, 5 = 0.050 s minimum answer delay). The value can be set between 0–254. Example:

```
>sdelay
Serial delay   : 0 ? 10
>sdelay
Serial delay   : 10 ?
```

4.9.1.3 SMODE POLL command

Use the **SMODE POLL** command to set the default serial interface mode to POLL.

4.9.1.4 SCOM command

Use the **SCOM** command to show or set an alias for the **SEND** command. The given alias cannot be a command already in use.

When you use a **SCOM** alias in POLL mode, you must add the barometer address number as with a regular **SEND** command.

Example:

```
>scom meas
Send command   : meas
>send
pressure = 1013.02 hPa
>measpressure = 1013.02 hPa
>
```

4.9.1.5 OPEN command

When all barometers on the RS-485 bus are in POLL mode, the **OPEN** command sets 1 barometer temporarily to STOP mode so that you can type other commands.

```
OPEN [aa]
```

Parameter	Description
aa	Address of the barometer (0–255)

Example:

```
open 1
PTB330: 1 line opened for operator commands
>
```

4.9.1.6 CLOSE command

Use the **CLOSE** command to switch the barometer back to the POLL mode.

```
>close
line closed
```

4.9.1.7 SEND command

Use the **SEND** command to print the reading once in POLL mode:

```
SEND [aa]
```

Parameter	Description
aa	Barometer address

4.10 Operating analog output

The analog outputs are set in the factory according to the order form. If you want to change the settings, follow these instructions. See section Installing analog output module (AOUT-1T) (page 36).

4.10.1 Changing output mode and range

The output channel has its own DIP switch module with 8 switches.

1. To select the current/voltage output, switch either **1** or **2 ON**.

2. To select the range, switch **ON** one of the switches from **3** to **7**.

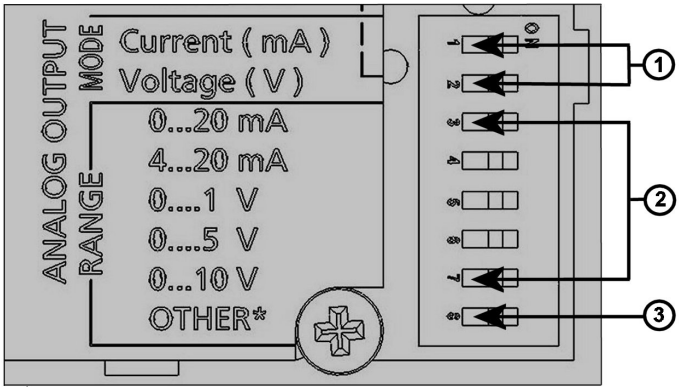

1 Current/voltage selection output switches (from **1** to **2**).
2 Current/voltage range selection switches (from **3** to **7**) in analog output 1 and 2.
3 Switch for service use only. Keep always in off position.

> Only one of the switches **1** or **2**, must be **ON** at a time. Only one of the switches **3** to **7**, must be **ON** at a time.

The following example shows how to select a 0 ... 5 V voltage output.

Figure 31 Dip switch selection example

	OFF	ON	Selection
1	▮		
2		▮	Voltage output selected
3	▮		
4	▮		
5	▮		
6		▮	0...5 V selected
7	▮		
8	▮		

> If you have customized the error output setting (**AERR**), check that the set error values are still valid after changing the output mode/range.

More information

- Installing analog output module (AOUT-1T) (page 36)

‣ Analog output fault indication setting (page 98)

4.10.2 Analog output quantities

4.10.2.1 AMODE/ASEL command

Use the serial line to select and scale the analog output quantities:

1. Connect the barometer to the computer.
2. Open the terminal connection between your computer and the barometer.
3. Check the analog output modes with the **AMODE** command.

   Example:

```
>amode
Ch1 output      : 0...1 V
Ch1 slot        : 4
Ch1 type        : T compensated>
```

4. Select and scale the quantities for the analog outputs with the command **ASEL**.

```
ASEL [xxx]
```

> The optional quantities can be selected only if they have been selected when ordering the barometer.

Parameter	Description
xxx	Quantity of channel 1

Type always all the quantities for all the outputs.

```
>asel P
Ch1 P     low  : 900.00 hPa
Ch1 P     high : 1100.00 hPa
>
```

4.10.3 Analog output tests

4.10.3.1 ATEST command

Use the serial line to set the analog output test value. The output value is forced to the input value and held until you type the command without parameters. The valid range of test voltage/current is the same as the analog output range.

```
ATEST [x] [y]
```

Parameter	Description
x	Volts
y	Milliamperes

Example:

```
>atest 1.0
Ch1            :  1.000 (mA/V)   H'6644
>
```

4.10.4 Analog output fault indication setting

4.10.4.1 AERR command

Use the serial line command **AERR** to set the analog output error value, when an error condition is active, in V or mA). The valid range (output range) for error value depends on the mode of the AOUT-1.

Example:

```
>aerr
Ch1 error out  : 0.000V ?
>
```

5. Calibration

5.1 Calibration overview

For instructions on how to calibrate PTB330 with PTB330TS, see PTB330TS User Guide.

PTB330 is fully calibrated and adjusted as shipped from the factory. Always perform calibration when there is reason to believe that the device is not within the accuracy specifications.

When defining the calibration interval, take into consideration the local long-term specifications and other requirements. Contact Vaisala Service Centers for details.

Calibration and adjustment are carried out through the serial port or with the optional display/keypad.

5.2 Pressure

- Use the **LCP** command to select a simple offset or a 2-point offset and gain adjustment for the barometer module.
- Use the **MPCP** command for multipoint adjustment with up to 8 pressure levels.

Make sure that you write down the linear and multipoint adjustments. Typing new linear or multipoint adjustments cancels the previous adjustments.

Table 29 Adjustment and calibration commands for barometer module P1

Command	Function
LCP1 ?	Displays current linear adjustment status
LCP1 ON/OFF	Enables/Disables the linear adjustments
LCP1	Enter linear adjustments
MPCP1 ON/OFF	Enables/Disables the multipoint adjustments
MPCP1	Enters multipoint adjustments
CDATE	Shows or sets the calibration date
CTEXT	Shows or sets the calibration info text.

5.3 Opening and closing the adjustment mode

To proceed with adjustment and calibration, open the adjustment mode. The adjustment button with an indicator LED is located in the upper corner on the left-hand side of the motherboard.

1. Open PTB330 cover.
2. Press the **ADJ** button.

   The adjustment mode is available and the red indicator LED is on.
3. To lock the adjustment mode, press the **ADJ** button again.

   The red indicator LED is off.
   The adjustment menu on the display/keypad is visible when you press the **ADJ** button.

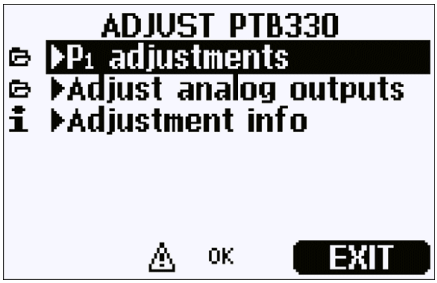

5.4 PTB330 pressure adjustment

In PTB330, the raw measured pressure value of each barometer module is first corrected using the corresponding multipoint adjustment values. The additional linear adjustment (if enabled) is applied to the corrected values. This allows you to fine-tune the pressure display by using the linear adjustment without performing a complete readjustment for the barometer module.

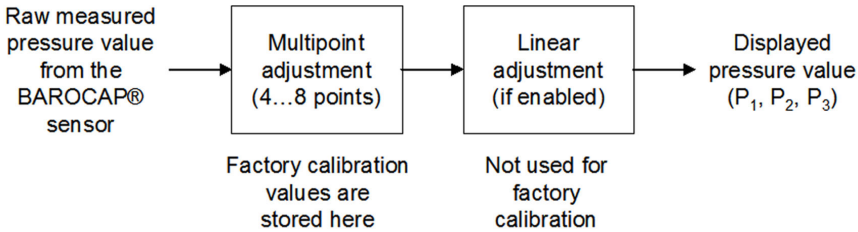

Figure 32 PTB330 adjustments

For correct adjustment, disable the existing adjustment before measuring the new adjustment data. If you only do offset or linear adjustment (1 to 2 pressure points), leave the multipoint adjustments active. If you want to perform a complete readjustment of your PTB330, disable both the multipoint and the linear adjustments, and calibrate the instrument at 2–8 pressure points. Type the new adjustment values to the multipoint adjustment function. The linear adjustment is not used, it is disabled.

> You can set up a 1-point offset adjustment in prevailing ambient pressure using a suitable reference instrument, such as PTB330TS.

5.4.1 Adjusting with display/keypad

Use the display/keypad to view the active multipoint/linear adjustments:

1. To open the **ADJUST PTB330** menu, press the **ADJ** button. It is located on the motherboard in the upper corner on the left-hand side.
2. To select **P1 adjustments**, press the right arrow button.
3. Select **Multipoint adjustment**/**Linear adjustment**.

   If the corresponding adjustment is already enabled, it is marked with a check mark.
4. If the adjustment is enabled, select **SHOW** to see the active adjustment values and **OK** to leave the adjustment active or **DISABLE** to disable the adjustment (confirm with **YES**).
5. To exit the adjustment mode, select **EXIT**.

   To measure new adjustment values and perform the actual adjustment, first disable the corresponding adjustment on each barometer module you are going to adjust. If you are going to perform a multipoint adjustment, disable also the linear adjustments. If you are going to do only a linear adjustment, leave the multipoint adjustments untouched.

   > For offset adjustment, type only 1 adjustment point in the linear adjustment function.

   > After disabling the previous adjustments, calibrate PTB330 against your pressure reference. Make a note of the pressure reading of each PTB330 barometer module separately (quantities P_1, P_2, and P_3). Then use the display/keypad to type and activate the new multipoint/linear adjustment factors.

6. To open the **ADJUST PTB330** menu, press the **ADJ** button.
7. To select **P1 adjustments**, press the right arrow button.
8. To select **Multipoint adjustment**/**Linear adjustment**, select **SET**.

9. Select an existing adjustment point or **Add adjustment point** and select **SET** to type your new values. If asked, select **MODIFY** to replace the old values with your new ones.
10. Use the arrow buttons to select the P_1 value of the PTB330 in **Reading**. Select **OK**.
11. Type the corresponding pressure reference value to the **Reference** prompt by using the up/down arrow buttons. Select **OK** button.
12. Repeat steps 4 to 6 until you have entered all the pressure points you have.
13. To remove any excess old adjustment points, select **SET** and select **REMOVE** on each of them.
14. To activate the adjustment, press **OK** and **YES**.
15. To go back to the **ADJUST PTB330** menu, press the left arrow button and repeat steps 2 to 9 for each barometer module you are adjusting.
16. If you want to set a new calibration date, go to the **Adjustment info** submenu.
17. To exit adjustment mode, select **EXIT**.

5.4.2 Linear/offset adjustment using serial line

Making adjustments is possible only after adjustments have been unlocked. To unlock the adjustments, press the **ADJ** button on the motherboard of the transmitter.

The **LCP1** command performs offset adjustment for barometer module/module P1. The **LCP2** and **LCP3** commands do the same for modules P2 and P3. Use the commands:

- to view current linear/offset adjustments
- to activate or deactivate the linear/offset adjustment function
- to enter new offset or linear offset/gain pressure adjustments to the transmitter.

Each barometer module has its own adjustment commands. You must enter the linear/offset adjustments for each barometer module separately.

5.4.2.1 Adjusting offset

To enter new offset (1-point) or linear (2-point) adjustments:

1. To display current pressure adjustments, type **LCP1 ?** (and **LCP2 ?**, **LCP3 ?**, if applicable).
2. Write down the current settings if you want to restore the old values later.
3. To deactivate the previous adjustments, type **LCP1 OFF** (and **LCP2 OFF**, **LCP3 OFF**, if applicable).
4. Put PTB330 to reference pressure conditions and write down the reference and measured P_1 (P_2, P_3) values for linear offset/gain adjustment.

5. Perform a or b.

   a. For 1-point offset adjustment, enter the command **LCP1** (**LCP2**, **LCP3**), and enter the measured and reference values in the first slots, and then enter the same values increased by 1 in the second slots.

      Offset adjustment:

```
>lcp1
1. Reading ? 981.2
1. Reference ? 980.0
2. Reading ? 982.2
1. Reference ? 981.0
>
```

   b. For 2-point linear adjustment, enter the command **LCP1** (**LCP2**, **LCP3**), and enter the new adjustments when prompted.

      Linear adjustment:

```
>lcp1
1. Reading ? 981.2
1. Reference ? 980.0
2. Reading ? 1102.1
2. Reference ? 1100.0
>
```

6. To activate the new adjustments, type **LCP1 ON** (and **LCP2 ON**, **LCP3 ON**, if applicable).

```
LCP1 [x/y] [z]
```

Parameter	Description
x	ON
y	OFF
z	?

The new linear/offset adjustments cancel the previous linear/offset adjustments as well as the valid date of calibration of the transmitter. A new calibration date and note can be set with the CDATE command (page 108) and CTEXT command (page 108) commands.

5.4.3 Multipoint adjustment using serial line

Making adjustments is possible only after adjustments have been unlocked. To unlock the adjustments, press the **ADJ** button on the motherboard of the transmitter.

Use the **MPCP1**, **MPCP2** and **MPCP3** commands:

- to view current multipoint adjustments for barometer module/modules P1, P2, and P3
- to activate or deactivate the multipoint adjustment function
- to enter new multipoint pressure adjustments to the transmitter.

The commands operate like **LCP1**, **LCP2** and **LCP3**, but can take up to 8 reading/reference pairs. If there are 3 pressure barometer modules installed, the commands **MPCP1**, **MPCP2** and **MPCP3** are available. When changing multipoint adjustments, remember to disable all offset/linear adjustments as well.

Each barometer module has its own adjustment commands. You must enter the multipoint adjustments for each barometer module separately.

5.4.3.1 Adjusting multipoint

To enter new multipoint adjustments:

1. To display the current pressure adjustments, type the command **MPCP1 ?** (and **MPCP2 ?**, **MPCP3 ?**, if applicable).
2. If you want to restore the current settings later on, write them down.
3. To deactivate all adjustments, type **MPCP1 OFF** (and **MPCP2 OFF**, **MPCP3 OFF**, if applicable) and **LCP1 OFF** (and **LCP2 OFF**, **LCP3 OFF**, if applicable).
4. Record the (up to 8 points of) measurements in controlled reference pressure conditions. Make note of P_1 P_2, and P_3 separately, if applicable.
5. Type **MPCP1** (and **MPCP2**, **MPCP3**, if applicable), and type the new adjustments when prompted.
6. To activate the adjustments, type the command **MPCP1 ON** (and **MPCP2 ON**, **MPCP3 ON**, if applicable).

7. Leave **LCP1** (and **LCP2**, **LCP3**, if applicable) in the OFF state after multipoint adjustment.

> The new multipoint adjustments cancel the previous adjustments as well as the valid date of calibration of the transmitter. You can set a new calibration date and note with CDATE command (page 108) and CTEXT command (page 108).

```
MPCP1 [x/y] [z]
```

Parameter	Description
x	ON
y	OFF
z	?

Examples:
Display current multipoint adjustments:

```
>MPCP1 ?
Multipoint adjustment: OFF
Reading                    Reference                  Correction
         800.21 hPa                 800.10 hPa                 -0.110 hPa
         850.22 hPa                 849.20 hPa                 -1.020 hPa
         901.02 hPa                 899.99 hPa                 -1.030 hPa
         949.98 hPa                 950.01 hPa                  0.030 hPa
        1000.11 hPa                1000.10 hPa                 -0.010 hPa
        1050.12 hPa                1050.12 hPa                  0.000 hPa
>
```

Disable **MPCP1** and **LCP1** adjustments:

```
>MPCP1 OFF
Multipoint adjustment: OFF
>LCP1 OFF
Linear adjustment: OFF
>
```

Type **MPCP1** adjustment data, 6 points:

```
>MPCP1
1. Reading ? 800.21
1. Reference ? 800.10
2. Reading ? 850.22
2. Reference ? 849.2
3. Reading ? 901.02
3. Reference ? 899.99
4. Reading ? 949.98
4. Reference ? 950.01
5. Reading ? 1000.11
5. Reference ? 1000.10
6. Reading ? 1050.12
6. Reference ? 1050.12
7. Reading ? (Leave empty to finish data entry.)
Multipoint adjustment: OFF
Reading                    Reference                    Correction
         800.21 hPa                  800.10 hPa                   -0.110 hPa
         850.22 hPa                  849.20 hPa                   -1.020 hPa
         901.02 hPa                  899.99 hPa                   -1.030 hPa
         949.98 hPa                  950.01 hPa                    0.030 hPa
        1000.11 hPa                 1000.10 hPa                   -0.010 hPa
        1050.12 hPa                 1050.12 hPa                    0.000 hPa
           0.00 hPa                    0.00 hPa                    0.000 hPa
           0.00 hPa                    0.00 hPa                    0.000 hPa
>
```

Activate MPCP1 adjustment:

```
>MPCP1 ON
Multipoint adjustment: ON
>
```

5.5 Analog output adjustment (Ch1)

In the analog output calibration the analog output is forced to the following values:

- Current output: 2 mA and 18 mA.
- Voltage output: 10 % and 90 % of the range.

Connect PTB330 to a calibrated current/voltage meter in order to measure either current or voltage depending on the selected output type.

Normally, analog output module does not need to be adjusted once it has left from the factory. However, if accuracy of the unit is suspected, it is advisable to return the unit to Vaisala for re-adjustment/calibration.

5.5.1 Adjusting analog output with display and keypad

1. To open the adjustment menu, press the **ADJ** button.
2. To select **Adjust analog outputs**, press the right arrow key.

3. To adjust the output, select **Adjust analog output 1 > START**.
4. Measure the first analog output value with a multimeter. Enter the measured value by using the arrow buttons. Select **OK**.
5. Measure the second analog output value with a multimeter. Enter the measured value by using the arrow buttons. Select **OK**.
6. To return to the adjustment menu, select **OK**.
7. To close the adjustment mode and to return to the basic display, select **EXIT**.

5.5.2 Adjusting analog output with the serial line

5.5.2.1 ACAL command

The **ACAL** command adjusts the analog output, if an **AOUT-1** module is present. Connect a multimeter to the analog output and type measured voltage/current values.

To enable adjustments, press the **ADJ** button on the motherboard.

```
ACAL [x]
```

Parameter	Description
x	1

Example:

```
>acal 1
1st value ? 0.11
2nd value ? 0.92
>
```

5.6 Feeding adjustment information

Adjustment information and date are a part of the device information that is shown by using the **?** command. To enter updated adjustment information, use the **CTEXT** and **CDATE** commands.

Use the **CTEXT** command to enter text to the adjustment information field.

```
>ctextVaisala/MSL
Calibrationtext : Vaisala/MSL
>
```

Use the **CDATE** command to enter date to adjustment information field. Set the adjustment date in format YYYY-MM-DD.

```
>cdate2006-06-12
Calibrationdate : 2006-06-12
>
```

5.6.1 Typing adjustment information with display and keypad

1. To open the adjustment menu, press the **ADJ** button on the motherboard.
2. To select **Adjustment info**, press the right arrow button.
3. Select **Date**, select **SET**. Enter a date by using the arrow buttons. Press **OK**.
4. Select **i**, select **SET**. Type information text including 17 characters at maximum. Use the arrow buttons. Press **OK**.
5. To return to the basic display, select **EXIT**.

5.6.2 Feeding adjustment information with serial line

5.6.2.1 CTEXT command

Use the **CTEXT** command to type text to the adjustment information field.

Example:

```
>ctext Vaisala/MSL
Calibration text : Vaisala/MSL
>
```

5.6.2.2 CDATE command

Use the **CDATE** command to type a date to the adjustment information field. Set the adjustment date in format YYYY-MM-DD.

```
>cdate 2006-06-12
Calibration date : 2006-06-12
>
```

6. Maintenance

PTB330 does not require regular maintenance. It does not have any replaceable parts. In case of a malfunction, replace the sensor.

CAUTION! Do not pierce or disconnect the pressure hose.

6.1 Cleaning

Clean the barometer enclosure with a soft, lint-free cloth moistened with mild detergent. In addition, check the static pressure head (or pressure port) and tubing periodically and clean them and replace tubing when necessary.

6.2 Errors

In case of errors, pressure is not measured and the output is shown as follows:

- Analog channel outputs 0 mA or 0 V (you can use the serial line command **AERR** or display/keypad to change this fault indication value, see Analog output fault indication setting (page 98).
- The serial port output is stars (***).
- The cover LED is blinking.
- Optional display: error indicator is lit.

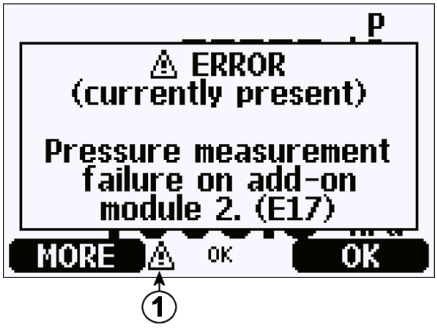

Figure 33 Error indicator and error message

1 Error indicator

The error indicator disappears when the error state is over and you have checked the error message. Select **Info** to display the error message.

You can also check the error message through the serial interface by using the command **ERRS**.

Table 30 Error messages

Error code	Error message	Action
E3	`Difference between pressure transducers too large.`	Do one of the following: • Check that the barometer modules are measuring the same pressure. • Check if one of the barometer modules is out of the valid range. • Check if the **DPMAX** value is set too low. .
E4	`Pressure out of valid range.`	Check that the assumed pressure is within the measurement range for the barometer.
E5	`Communication module installed in incorrect add-on module slot.`	Disconnect the power, change the RS485-1 module to module slot 1, and type the **MODS** command to register the change.
E6	`Operating voltage out of range.`	Make sure that the operating voltage is within the valid range.
E7	`Internal system voltage out of range.`	Internal barometer failure. Return the barometer to the Vaisala Service Center.
E8	`Device internal temperature out of range.`	Make sure that the operating temperature is within the valid range.
E9	`Checksum error in the internal configuration memory.`	Internal barometer failure. Return the barometer to the Vaisala Service Center.
E10	`Internal EEPROM read error.`	Internal barometer failure. Return the barometer to the Vaisala Service Center.
E11	`Internal EEPROM write error.`	Internal barometer failure. Return the barometer to the Vaisala Service Center.
E12 to E15	`Add-on module 1/2/3/4 connection failure.`	Turn off power and check the module connection. Turn on power. If the module is intentionally missing, type the **MODS** command to register the change.
E16 to E19	`Pressure measurement failure on add-on module 1/2/3/4.`	Internal barometer failure. Return the barometer to the Vaisala Service Center.
E20	`Configuration switches for analog output set incorrectly.`	Check and reset the switches of the analog output module, see Changing output mode and range (page 95).
E24 to E27	`EEPROM failure on add-on module 1/2/3/4.`	Internal barometer failure. Return the barometer to the Vaisala Service Center.

Error code	Error message	Action
`E28` to `E31`	`Unknown/incompatible module installed in add-on module slot 1/2/3/4).`	Ensure that the module is compatible with the PTB330. When a new unregistered module is installed in the module slot, type the **`MODS`** command to register the change.

7. Technical data

7.1 PTB330 specifications

Table 31 Measurement performance

Property	Class A	Class B
Barometric pressure range 500–1100 hPA		
Linearity [1)]	±0.05 hPa	±0.10 hPa
Hysteresis [1)]	±0.03 hPa	±0.03 hPa
Repeatability [1)]	±0.03 hPa	±0.03 hPa
Calibration uncertainty [2)]	±0.07 hPa	±0.15 hPa
Accuracy at +20 °C (+68 °F) [3)]	±0.10 hPa	±0.20 hPa
Barometric pressure range 50–1100 hPA		
Linearity [1)]	–	±0.20 hPa
Hysteresis [1)]	–	±0.08 hPa
Repeatability [1)]	–	±0.08 hPa
Calibration uncertainty [2)]	–	±0.15 hPa
Accuracy at +20 °C (+68 °F) [3)]	–	±0.20 hPa
Temperature dependence [4)]		
500–1100 hPa	±0.1 hPa	±0.1 hPa
50–1100 hPa	±0.3 hPa	±0.3 hPa
Total accuracy −40 ... +60 °C (−40 ... +140 °F)		
500–1100 hPa	±0.15 hPa	±0.25 hPa
50–1100 hPa	–	±0.45 hPa
Long-term stability		
500–1100 hPa	±0.1 hPa/year	±0.1 hPa/year
50–1100 hPa	±0.2 hPa/year	±0.2 hPa/year
Miscellaneous		
Pressure units	hPa, mbar, kPa, Pa inHg, mmH20, mmHg, torr, psia	hPa, mbar, kPa, Pa inHg, mmH20, mmHg, torr, psia
Resolution	0.01 hPa	0.1 hPa

Property	Class A	Class B
Settling time at startup (1 sensor)	4 s	3 s
Response time (1 sensor)	2 s	1 s
Acceleration sensitivity	–	Negligible
Maximum pressure limit	–	5000 hPa absolute
Maximum measurement rate [5)]	–	10 Hz

1) *Defined as ±2 standard deviation limits of endpoint non-linearity, hysteresis, or repeatability error.*
2) *Defined as ±2 standard deviation limits of inaccuracy of the working standard including traceability to international standards.*
3) *Defined as the root sum of the squares (RSS) of endpoint non-linearity, hysteresis error, repeatability error, and calibration uncertainty at room temperature.*
4) *Defined as ±2 standard deviation limits of temperature dependence over the operating temperature range.*
5) *For class A you need a longer averaging time or measurement interval.*

Table 32 Inputs and outputs

Property	Description/Value
Supply voltage	10–35 V DC
Supply voltage sensitivity	Negligible
Typical power consumption at +20 °C (+68 °F) (voltage at 24 V DC with 1 pressure sensor)	RS-232: 25 mA RS-485: 40 mA Output voltage U_{out}: 25 mA Output current I_{out}: 40 mA Display and backlight: +20 mA
Serial communication	RS-232, RS-485, RS-422

Table 33 Operating environment

Property	Description/Value
Operating pressure	500–1100 hPa, 50–1100 hPa
Operating temperature	PTB330 without display: −40 ... +60 °C (−40 ... +140 °F) PTB330 with display: +0 ... +60 °C (+32 ... +140 °F)
Operating humidity	0–100 %RH, non-condensing

Property	Description/Value
Storage temperature	PTB330 without display: −55 ... +80 °C (−67 ... +176 °F) PTB330 with display: −40 ... +80 °C (−40 ... +176 °F)
IP rating	IP66: Dust-tight. Protected from powerful water jets from any direction. IP65 (NEMA 4) with local display: Dust-tight. Protected from water jets from any direction. [1)]

1) IP rating of PTB330AWS is IP40.

Table 34 Mechanical specifications

Property	Description/Value
Pressure fitting	Barbed fitting for 1/8-inch (inside diameter) tubing or quick connector with shutoff valve for 1/8-inch hose
Pressure connector	M5 (10-32) internal thread
Housing material	G AlSi10 Mg (DIN 1725)
Weight	1–1.5 kg (2.2–3.3 lb)

Table 35 Data transfer software

Property	Description/Value
MI70 Link Interface software requirements	Microsoft® Windows OS Microsoft® Excel

Table 36 Analog output (optional)

Property	Description/Value	
Current output	0–20 mA, 4–20 mA	
Voltage output	0–1 V, 0–5 V, 0–10 V	
Accuracy at pressure range	500–1100 hPa	50–1100 hPa
At +20 °C (+68 °F)	±0.30 hPa	±0.40 hPa
At −40 ... +60 °C (−40 ... 140 °F)	±0.60 hPa	±0.75 hPa

Table 37 Compliance

Property	Value
EU directives and regulations	RoHS Directive (2011/65/EU) as amended by 2015/863 EMC Directive (2014/30/EU) Low Voltage Directive (2014/35/EU), applies to units equipped with single-phase AC power supply Power-1
Electrical safety	EN 61010-1:2010 + A1:2019, applies to units equipped with single-phase AC power supply Power-1
Electromagnetic compatibility (EMC)	EN 61326-1, industrial environment EN 55011:2009 + A1:2010
Environmental	EN IEC 63000:2018

Table 38 Accessories

Item	Order code
Modules	
Relay module	RELAY-1L
Temperature-compensated analog output module	AOUT-1T
Isolated RS-485 module	RS485-1
Power supply module	POWER-1
AC adapters for devices already equipped with an external AC adapter connector	
AC adapter, EU	MI70EUROADAPTER
AC adapter, USA	222340SP
AC adapter, UK	MI70UKADAPTER
AC adapter, AUS	MI70AUSADAPTER
Static pressure head	
Static pressure head	SPH10
Static pressure head with heating	SPH20
Barometer mounting accessories	
Junction box	ASM211113
Wall mounting kit	214829
Installation kit for pole or pipeline	215108

Item	Order code
Outdoor installation kit (weather shield)	215109
DIN rail clips with installation plate	215094
Panel mounting frame	216038
Connection cables	
Connection cable for PTB330 and MI70 handheld meters for spot check or calibration and adjustment	211339
Service cables	
USB-RJ45 serial connection cable	219685
D9-RJ45 serial connection cable	215005
Output cables for 8-pin connector	
Connection cable 5 m with 8-pin M12 female, black	212142
Female connector 8-pin M12 with screw terminals	212416
Cable bushings	
PTB330/220/PTU200 DC adapter and RS-232 cable for PC	213019
PTB330/PTB220/PTU200 DC adapter cable	213026
Others	
Dust filter	237018SP
Barbed pressure fitting 1/8-inch	19498SP
Quick connector 1/8-inch	220186

7.2 Optional module specifications

Table 39 AC power supply module

Property	Description/Value
Operating voltage	100–240 V AC 50/60 Hz
Connections	Screw terminals for 0.5–2.5 mm^2 wire (AWG 20–14)
Bushing	For 8–11 mm diameter cable
Operating temperature	-40 ... +60 °C (-40 ... +140 °F)

Property	Description/Value
Storage temperature	-40 ... +70 °C (-40 ... +158 °F)

Table 40 Analog output module AOUT-1

Property	Description/Value	
Outputs	0–20 mA, 4–20 mA, 0–1 V, 0–5 V, 0–10 V	
Operating temperature range	-40 ... +60 °C (-40 ... +140 °F)	
Power consumption	Uout 0 ... 1 V	max 30 mA
	Uout 0 ... 5 V/0 ... 10 V	max 30 mA
	Iout 0 ... 20 mA	max 60 mA
External loads	Current outputs	RL < 500 ohms
Max load + cable loop resistance	540 ohms	
	0–1 V	RL > 2000 ohms
	0–5 V and 0–10 V	RL > 10 000 ohms
Storage temperature range	-55 ... +80 °C (-67 ... +176 °F)	
3-pole screw terminal		
Max wire size	1.5 mm^2 (AWG 16)	

Table 41 Relay module

Property	Description/Value	
Operating temperature range	-40 ... +60 °C (-40 ... +140 °F)	
Operating pressure range	500–1300 mmHg	
Power consumption at 24 V	Max. 30 mA	
Contacts SPDT (change over), for example,		
Contact arrangement Form C		
	Imax	0.5 A 30 V DC
Safety standard for the relay component	IEC 60950 UL1950	
Storage temperature range	-55 ... +80 °C (-67 ... +176 °F)	
3-pole screw terminal / relay		
Max. wire size	2.5 mm^2 (AWG 14)	

Table 42 RS-422/RS-485 module RS485-1

Property	Description/Value	
Operating temperature range	-40 ... +60 °C (-40 ... +140 °F)	
Operating modes	2-wire (1-pair + common) half duplex	
Operating modes	4-wire (2-pair + common) full duplex	
Operating speed max.	115200 baud	
Bus isolation	300 V DC	
Power consumption at 24 V	Max. 50 mA	
External loads	Standard loads	32 RL > 10 kohm
Storage temperature range	-55 ... +80 °C (-67 ... +176 °F)	
Max. wire size	1.5 mm^2 (AWG 16)	

7.3 PTB330 dimensions

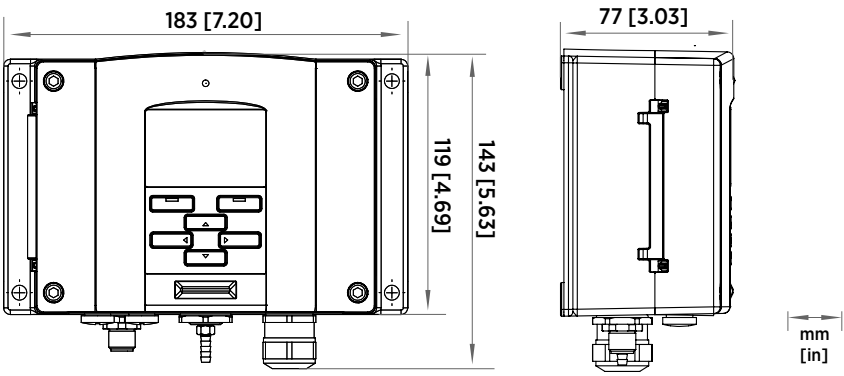

Figure 34 PTB330 dimensions

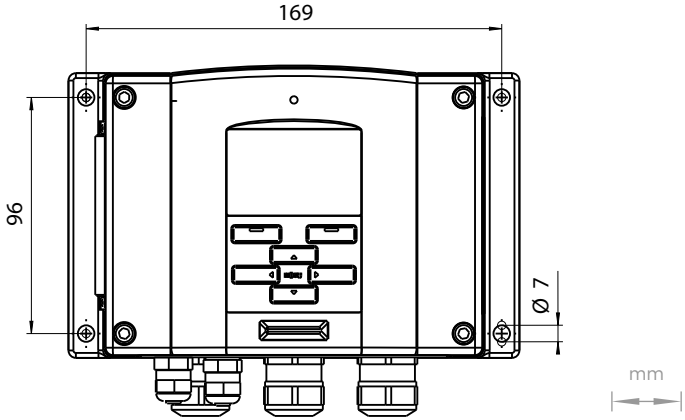

Figure 35 Standard mounting

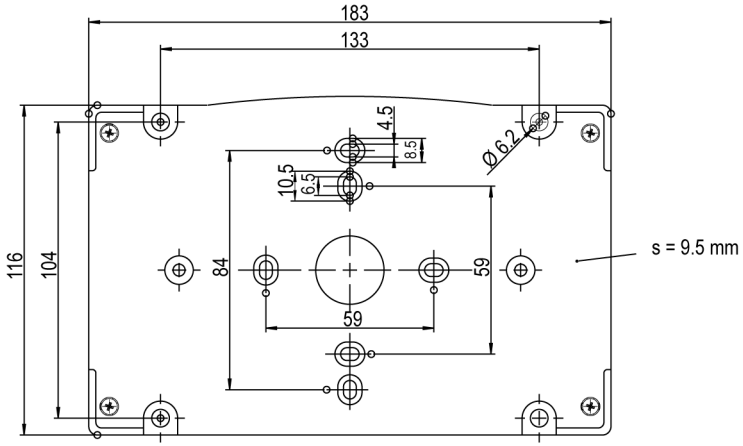

Figure 36 Dimensions of plastic mounting plate

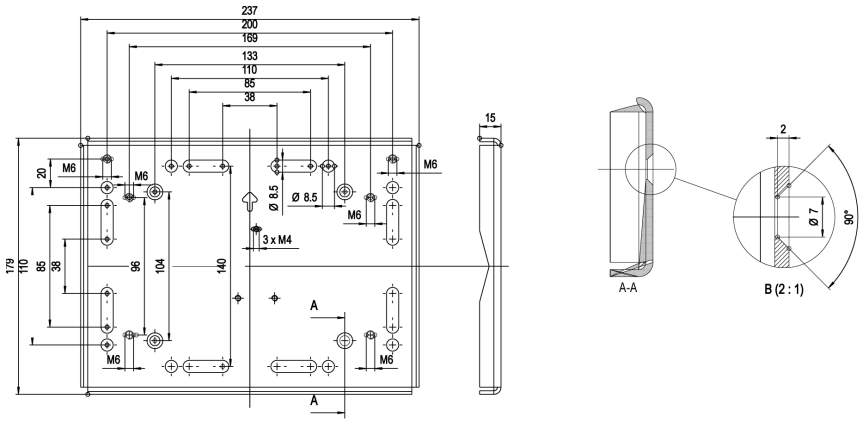

Figure 37 Dimensions of metal mounting plate (mm)

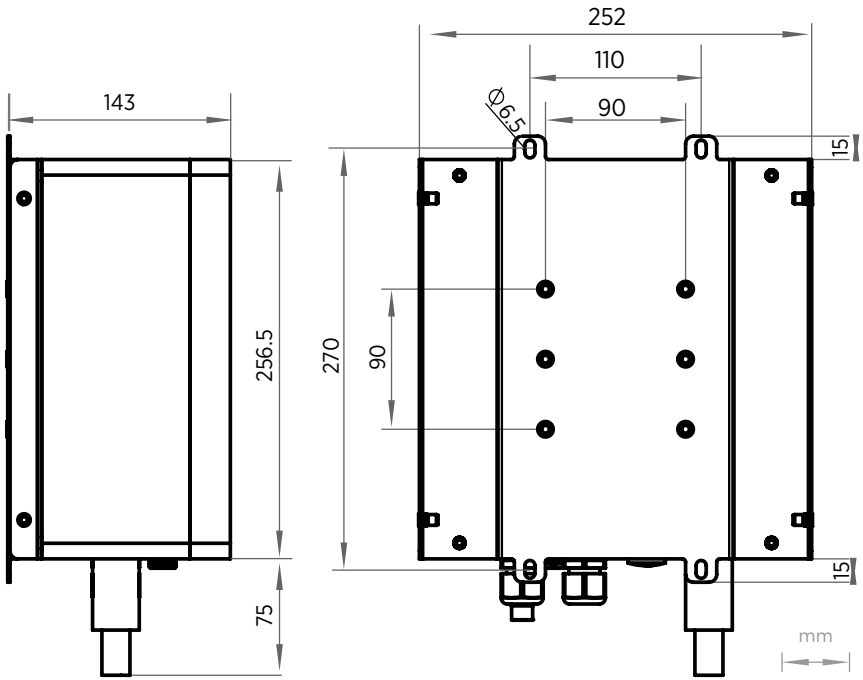

Figure 38 Junction box ASM211113

More information

- Mounting panel mounting frame (page 21)

8. Vaisala services

8.1 Service centers

Vaisala offers comprehensive customer care throughout the life cycle of our products. Our service centers offer maintenance, calibration, upgrade, and repair services. All the services are provided worldwide with fast deliveries. For more information, go to vaisala.com/services.

The services are available from:

- Vaisala Online Store, store.vaisala.com
- Vaisala Services, helpdesk@vaisala.com

The provided services vary product by product.

8.2 Technical support

You can contact Vaisala technical support at vaisala.my.site.com/myvaisala or helpdesk@vaisala.com. You can find all our support channels at vaisala.com/support.

When contacting technical support, provide the following as applicable:

- Product name, model, and serial number
- Software/Firmware version
- Name and location of the installation site
- Name and contact information of a technical person who can provide further information
- Diagnostics package for the application

If applicable, also provide the following details:

- What failed (what worked / did not work)?
- Where did it fail (location and environment)?
- When did it fail (date, immediately / after a while / periodically / randomly)?
- How many failed (only one defect / other same or similar defects / several failures in one unit)?
- What was done when the failure was noticed?
- What was connected to the product and to which connectors?
- What is the input power source type, voltage, and what else (such as lighting, heaters, and motors) was connected to the same power output?
- Are all parts connected and grounded properly? Take a photo to help the troubleshooting.

8.3 Warranty

For standard warranty terms and conditions, see vaisala.com/warranty.

Please observe that any such warranty may not be valid in case of damage due to normal wear and tear, exceptional operating conditions, negligent handling or installation, or unauthorized modifications. Please see the applicable supply contract or Conditions of Sale for details of the warranty for each product.

Appendix A. Calculation formulas

Height compensated pressure values (QFE, QNH, and HCP) are calculated using the following equations:

$$QFE = p \cdot \left(1 + \frac{h_{QFE} \cdot g}{R \cdot T}\right)$$

Symbol	Description
p	Measured air pressure [hPa]
hQFE	Height difference between the barometer and reference level [m]
g	9.81 [m/s2]
R	287 [J/kg/K]
T	Temperature [K]

$$QNH = QFE \cdot e^{\frac{h_{QNH} \cdot g}{R \cdot \left(T_0 + \frac{\alpha \cdot h_{QNH}}{2}\right)}}$$

Symbol	Description
H_{QNH}	Station elevation [m]
g	9.81 [m/s^2]
R	287 [J/kg/K]
T	288.15 [K]
α	-0.0065 [K/m]

$$HCP = p + 0.1176 \cdot h_{HCP}$$

Symbol	Description
p	Measured air pressure [hPa]
h_{HCP}	Height difference between the barometer and reference level [m]

More information

- HQFE command (page 76)
- HQNH command (page 76)
- ICAOQNH command (page 77)

A.1 ICAOQNH mode for QNH and QFE

QNH and QFE values are rounded down to the next whole number in ICAOQNH mode.

$$H = 44330.77 - 11880.32 \cdot QFE^{0.190263}$$

$$QNH = 1013.25 \cdot \left(1.0 - \frac{0.0065 \cdot \left(H - h_{QNH}\right)}{288.15}\right)^{5.25588}$$

Table 43 Symbols used in QNH calculation formulas

Symbol	Description
QNH	Resulting value of QNH in [hPa] (before any rounding).
QFE	Current value of QFE in [hPa].
h_{QNH}	Value of HQNH command (page 76) setting in meters.

Appendix B. Unit conversion tables

Multiplication factors Note: conversions for mmHg and inHg are defined at 0°C temperature and for mmH2O and inH2O at 4°C temperature.

TO \ FROM	hPa mbar	Pa N/m2	mmHg torr	inHg	mmH2O	inH2O*	atm*	at*	bar	psia (psia = psi absolute)
hPa mbar	1	0.01	1.333224	33.86388	0.09806650	2.490889	1013.25	980.665	1000	68.94757
Pa Nm2	100	1	133.3224	3386.388	9.806650	249.0889	101325	98066.5	100000	6894.757
mmHg torr	0.7500617	0.0075006	1	25.40000	0.07355592	1.8683	760	735.559	750.0617	51.71493
inHg	0.02952999	0.00029530	0.03937008	1	0.002895903	0.073556	29.921	28.959	29.52999	2.036021
mmH2O	10.19716	0.1019716	13.59510	345.3155	1	25.40000	10332.3	10000	10197.16	703.0696
inH2O*	0.40147	0.0040147	0.53525	13.596	0.039372	1	406.79	393.71	401.463	27.6799
atm*	0.00098692	0.000009869	0.00131579	0.033422	0.000096788	0.0024583	1	0.967841	0.98692	0.068046
at*	0.0010197	0.00001020	0.0013595	0.034532	0.0001	0.0025399	1.03323	1	1.01972	0.070307
bar	0.001	0.00001	0.001333224	0.03386388	0.00009807	0.0024909	1.01325	0.980665	1	0.06894757
psia	0.01450377	0.00014504	0.01933678	0.4911541	0.001422334	0.036127	14.6962	14.2233	14.50377	1

Example 1013.25 hPa/mbar = 1013.25 x 0.02952999 inHg = 29.9213 inHg

Figure 39 Pressure conversion chart

Conversions from mmHg and inHg are defined at 0 °C (32 °F)and for mmH_2O and inH_2O at 4 °C (39.2 °F).

The device supports several different units for quantities. The following tables show the gain and offset values used for unit conversions.

Table 44 Unit conversion for all pressure quantities (excluding ΔPxx and P3h)

Unit	Gain	Offset	Min. ... Max.
hPa	1	0	0 ... 9999
psi	0.01450377	0	0 ... 99.9999
inHg	0.02952999	0	0 ... 99.9999
torr	0.7500617	0	0 ... 999.999
bar	0.001	0	0 ... 9.99999
mbar	1	0	0 ... 9999.99
mmHg	0.7500617	0	0 ... 999.999
kPa	0.1	0	0 ... 999.999
Pa	100	0	0 ... 999999
mmH_2O	10.19716	0	0 ... 99999.9
inH_2O	0.40147	0	0 ... 999.999

Table 45 Unit conversion for difference pressure ΔPxx and pressure trend P3h quantities

Unit	Gain	Offset	Min. ... Max.
hPa	1	0	-9999.99 ... 9999.99
psi	0.01450377	0	-99.9999 ... 99.9999
inHg	0.02952999	0	-99.999 ... 99.999
torr	0.7500617	0	-9999.99 ... 9999.99
bar	0.001	0	-9.99999 ... 9.99999
mbar	1	0	-9999.99 ... 9999.99
mmHg	0.7500617	0	-9999.99 ... 9999.99
kPa	0.1	0	-999.999 ... 999.999
Pa	100	0	-999999 ... 999999
mmH_2O	10.19716	0	-99999.9 ... 99999.9

Unit	Gain	Offset	Min. ... Max.
inH_2O	0.40147	0	-9999.99 ... 9999.99

Table 46 Unit conversion for settings pressure stability PSTAB and maximum pressure difference ΔPMAX

Unit	Gain	Offset	Min....Max.
hPa	1	0	0 ... 99.99
psi	0.01450377	0	0 ... 9.9999
inHg	0.02952999	0	0 ... 9.9999
torr	0.7500617	0	0 ... 99.999
bar	0.001	0	0 ... 0.09999
mbar	1	0	0 ... 99.99
mmHg	0.7500617	0	0 ... 99.99
kPa	0.1	0	0 ... 9.999
Pa	100	0	0 ... 9999
mmH_2O	10.19716	0	0 ... 9999.9
inH_2O	0.40147	0	0 ... 99.99

Table 47 Unit conversion for settings HHCP and HQFE

Unit	Gain	Offset	Min. ... Max.
m	1	0	-30 ... 30
ft.	3.28084	0	-99 ... 99

Table 48 Unit conversion for setting HQNH

Unit	Gain	Offset	Min. ... Max.
m	1	0	-30 ... 3000
ft	3.28084	0	-99 ... 9900

Table 49 Unit conversion for setting TQFE

Unit	Gain	Offset	Min. ... Max.
°C	1	0	-80 ... 200
°F	1.8	32	-110 ... 390

Unit	Gain	Offset	Min. ... Max.
K	1.0	-273.15	190 ... 470

Appendix C. PA11A Emulation Mode

C.1 PA11A emulation mode

The PTB330 series digital barometers have an emulation mode that allows them to partially emulate the PA11A barometer. In the emulation mode, PTB330 can automatically output PA11A type of messages.

The PA11A emulation mode requires PTB330 that is equipped with 3 barometer modules.

C.1.1 Activating PA11A emulation mode

To activate the PA11A emulation mode, type **SMODE PA11A** in the terminal program.

To reset, type **RESET**.

```
>smode pa11a
Start mode     : PA11A
>reset
```

After start-up, the barometer outputs messages in the PA11A format.

Command	Description
R	Starts the automatic message output
S	Stops the automatic message output
SEND	Shows the measurement result

To disable the emulation mode, change the mode with the **SMODE** command. For example, type **SMODE STOP**, and reset the transmitter.

C.1.2 PA11A message format

Message type 1 format:

```
<sp>P1<sp>P2<sp>P3<sp>status<sp>average<sp>trend<cr><lf>
```

Parameter	Description
`<sp>`	Space character
`P1`	Pressure output from transducer 1. The reading is written with 5 characters. If the transducer has a fault or has been switched off, the reading is replaced with error status `/////`.

Parameter	Description
`P2`	Pressure output from transducer 2, same format as P1
`P3`	Pressure output from transducer 3, same format as P1
`status`	Status of the average pressure measurement (binary, with 8 characters). `10000000` means OK with all 3 transducers included. The last 3 bits of the status indicate the transducers that are included when calculating the average. Status `00000110` means that transducers 2 and 3 are included and transducer 1 is ignored.
`average`	Average pressure (with 5 characters) based on 3 consequent measurements of each transducer included, which means pressure average over approximately one minute. If the average pressure cannot be calculated, the reading is replaced with error status `/////`.
`trend`	3 hour pressure trend (with 3 characters). Falling trend is indicated with a minus "-" character before the reading. If the data is not available (when measurement has been running for less than 3 hours), the reading is replaced with `///`.
`<cr><lf>`	Carriage return and line feed

All pressure readings are in 0.1 hPa. The pressure unit selection has no effect. If a reading is shorter than the amount of characters reserved for it, it is left-padded with space characters. See the examples below.

Example

- Pressure is 1014.4 hPa and 3-hour trend is +0.8 hPa:
  `10145 10144 10144 10000000 10144 8`
- Pressure is 989.1 hPa, the 3-hour trend is not available yet:
  `9891 9890 9892 10000000 9891 ///`
- Pressure is 1008.4 hPa, output from transducer 2 is ignored, and the 3-hour trend is not available yet:
  `10084 ///// 10084 00000101 10084 ///`
- Pressure is 1013.4 hPa and the 3-hour trend is -0.4 hPa:
  `10134 10134 10134 10000000 10134 -4`

Recycling

Recycle all applicable material according to local regulations.

VAISALA

vaisala.com

AKRIBIS · www.akribis.info · contacto@akribis.info