DATASHEET

PTB210

Vaisala · Authorized Partner

Distributed by AKRIBIS

BAROCAP® Digital Barometer PTB210

Features

- 500 ... 1100 hPa or 50 ... 1100 hPa pressure ranges with serial output
- Different scalings between 500 ... 1100 hPa with analog output
- Electronics housing IP65 protected against sprayed water
- Accurate and stable measurement
- Traceable calibration (certificate included)

Vaisala BAROCAP® Digital Barometer PTB210 is a reliable outdoor barometer for harsh conditions.

For harsh environments

PTB210 is ideal for outdoor installations and harsh environments. PTB210 is designed to operate in a wide temperature range, and the electronics housing provides IP65 (NEMA 4) standardized protection against sprayed water.

PTB210 is ideal for use in applications such as weather stations, data buoys, ships, airports, and agrology. It is also an excellent solution for monitoring barometric pressure in industrial equipment such as laser interferometers and engine test benches.

Several pressure ranges

PTB210 is designed for various pressure ranges. It is available in 2 pressure ranges in 3 configurations:

- Serial output for 500 ... 1100 hPa
- Serial output for 50 ... 1100 hPa
- Analog output with different scalings between 500 ... 1100 hPa

Accurate and stable measurement

PTB210 is digitally adjusted and calibrated by using electronic working standards. A higher accuracy barometer, which is fine-tuned and calibrated against a high-precision pressure calibrator, is available for the 500 ... 1100 hPa pressure range.

In addition, PTB210 integrates directly with Vaisala Static Pressure Head Series SPH10/20. This pairing offers accurate measurement in all wind conditions.

Vaisala BAROCAP technology

PTB210 uses the Vaisala BAROCAP sensor, a silicon capacitive absolute pressure sensor developed by Vaisala for barometric pressure applications.
The Vaisala BAROCAP sensor provides excellent hysteresis and repeatability characteristics and outstanding temperature and long-term stability. PTB210 is delivered with a traceable factory calibration certificate.

PTB210 paired with SPH10 static pressure head

Technical Data

Measurement performance

Pressure range			
Serial output		500 ... 1100 hPa 50 ... 1100 hPa	
Analog output		500 ... 1100 hPa 600 ... 1060 hPa 800 ... 1060 hPa 900 ... 1100 hPa	
Serial output, accuracy (hPa)			
Pressure range	500 ... 1100		50 ... 1100
	Class A	**Class B**	
Non-linearity [1]	± 0.10	± 0.15	± 0.20
Hysteresis [1]	± 0.05	± 0.05	± 0.10
Repeatability [1]	± 0.05	± 0.05	± 0.10
Calibration uncertainty [2]	± 0.07	± 0.15	± 0.20
Accuracy at +20 °C (+68 °F) [3]	± 0.15	± 0.20	± 0.35
Temperature dependency [4]	± 0.20	± 0.20	± 0.40
Total accuracy -40 ... +60 °C (-40 ... +140 °F) [3]	± 0.25	± 0.30	± 0.50
Long-term stability (hPa/year)	± 0.10	± 0.10	± 0.20
Analog output, accuracy			
Non-linearity [1]		± 0.20 hPa	
Hysteresis [1]		± 0.05 hPa	
Repeatability [1]		± 0.05 hPa	
Calibration uncertainty [2]		± 0.15 hPa	
Accuracy at +20 °C (+68 °F) [3]		± 0.30 hPa	
Temperature dependency [4]		± 0.50 hPa	
Total accuracy -40 ... +60 °C (-40 ... +140 °F) [3]		± 0.60 hPa	
Long-term stability		± 0.10 hPa/year	

1) Defined as the ±2 standard deviation limits of end point non-linearity, hysteresis error, or repeatability error.
2) Defined as ±2 standard deviation limits of inaccuracy of the working standard including traceability to international standards.
3) Defined as the root sum of the squares (RSS) of end point non-linearity, hysteresis error, repeatability error, and calibration uncertainty at room temperature.
4) Defined as ±2 standard deviation limits of temperature dependence over the operating temperature range.

Operating environment

Operating temperature	−40 ... +60 °C (−40 ... +140 °F)
Operating humidity	0 ... 100 %RH, non-condensing

Compliance

Directives	EMC Directive (2014/30/EU) RoHS Directive (2011/65/EU)
EMC compatibility	EN / IEC 61326-1, Electrical equipment for measurement, control and laboratory use - EMC requirement; Basic environment CISPR 32 / EN 55032, Class B
Compliance	CE, FCC, UKCA

Mechanical specifications

Housing material	PC plastic
IP rating, electronics	IP65 (NEMA 4)
IP rating, sensor	IP53
Weight, sensor	110 g (3.9 oz)
Cable weight	28 g/m (1.0 oz)

Inputs and outputs

Serial output	
Shutdown	ON/OFF
Settling time at startup	2 s
Serial I/O	RS-232C RS-232C / TTL (optional) RS-485, non-isolated (optional)
Parity	None, even, odd
Data bits	7, 8
Stop bits	1, 2
Baud rate	1200, 2400, 4800, 9600, 19200
Response time	1 s
Resolution	0.01 hPa (1 measurement/s) 0.03 hPa (10 measurements/s)
Current consumption, normal mode	< 15 mA (factory setting)
Current consumption, shutdown mode	0.2 mA
Analog output	
Outputs	0 ... 5 V DC, 0 ... 2.5 V DC (order specified)
Shutdown	ON/OFF
Response time	500 ms
Resolution	300 µV
Measurement rate	3 measurements/s
Current consumption, normal mode	< 8 mA
Current consumption, shutdown mode	0.2 mA
All models	
Max. pressure	5 000 hPa absolute
Pressure connector	M5 (10-32) internal thread
Pressure fitting	Barbed fitting for 1/8 in I.D. tubing
Supply voltage (reverse polarity protected), with RS-232/TTL output	5 ... 28 V DC
Supply voltage (reverse polarity protected), with RS-485 or analog output	8 ... 18 V DC

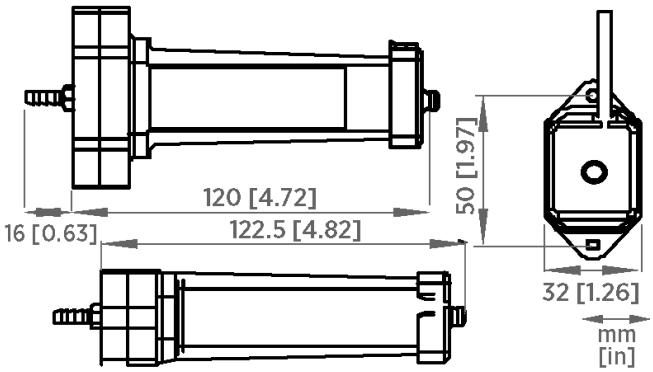

Published by Vaisala | B210942EN-E © 2021

All rights reserved. Any logos and/or product names are trademarks of Vaisala or its individual partners. Any reproduction, transfer, distribution or storage of information contained in this document is strictly prohibited. All specifications — technical included — are subject to change without notice.