USER GUIDE

PTB110

Vaisala · Authorized Partner

Distributed by AKRIBIS

VAISALA

USER'S GUIDE

AKRIBIS · www.akribis.info · contacto@akribis.info

Vaisala BAROCAP® Barometer PTB110 Series

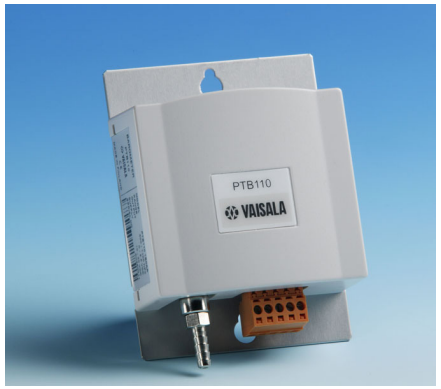

- **Several pressure ranges**
- **Accuracy ±0.3 hPa at +20 °C**
- **Long-term stability ±0.1 hPa/year**
- **On/off control with external trigger**
- **Output voltage 0 … 2.5 or 0 … 5 VDC, frequency output**
- **Current consumption less than 4 mA**
- **Mountable on a (35 mm wide) DIN rail**
- **NIST traceable (certificate included)**
- **BAROCAP® sensor**

© Vaisala 2012. All rights reserved.

M210839EN

PRODUCT DESCRIPTION

The PTB110 barometer is a micro controller based barometer including a voltage or frequency output. The barometer can be supplied with several pressure ranges. The output of the barometer is a calibrated barometric pressure reading.

The barometer uses the Vaisala BAROCAP® Sensor, a silicon capacitive sensor developed by Vaisala for barometric pressure measurement applications. The BAROCAP® sensor is especially designed for accurate and stable measurement of barometric pressure.

INSTALLATION

The PTB110 barometer is intended to be installed indoors. Installing outdoors requires a protecting enclosure. A DIN rail mounting option enables the mounting of the barometer on a 35 mm wide standard DIN mounting rail.

The barometer should be installed in a vertical position with the connectors pointing downwards to prevent accumulation of condensated water.

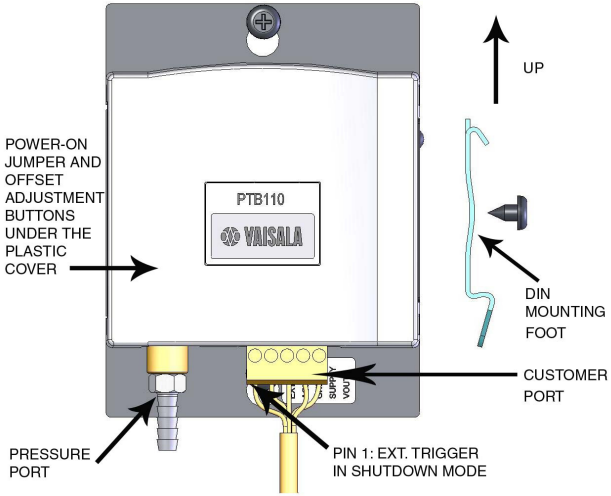

OPERATING MODES

The PTB110 barometer has two operating modes, the normal and the shutdown mode. The factory setting is the normal mode.

Normal Mode

- The device is in the normal mode when the power on jumper is connected (see figure on the following page).
- In the normal mode the barometer measures continuously when powered-up.

Shutdown Mode

- The device is in the shutdown mode when the power on jumper is not connected.
- In the shutdown mode, the barometer can be turned on or off by switching the pin 1. The pin 1 is located at the customer port, on the left edge of the screw terminal.

NOTE	The other jumpers inside the barometer are set at the factory and they must not be touched.

ELECTRICAL CONNECTIONS

The PTB110 barometer contains a screw terminal block located at the customer port. The screw terminal includes the electrical input/output pins presented in the table below.

Pins in screw terminal	Description/Value
Pin 1: EXT_TRIG	External trigger input
	Pin 1 is used as a power on/off switch in shutdown mode as follows:
	Power off 0 VDC
	Power on 5 VDC
Pin 2: AGND	Analog ground
Pin 3: GND	Ground
Pin 4: SUPPLY	Supply voltage
Pin 5: VOUT/FOUT	Voltage output/ Frequency output

In the normal mode no connection to the Pin 1 EXT_TRIG is recommended.

The barometer is protected against a reverse operating voltage.

Both grounds (AGND and GND) are in the same electrical potential in the barometer. Both three-wire and four-wire connections can be used. However, it is recommended to use the four-wire connection, especially if the signal wires are long.

For warranty information, visit our Internet pages at:
www.vaisala.com/warranty

The connections can be made as illustrated below.

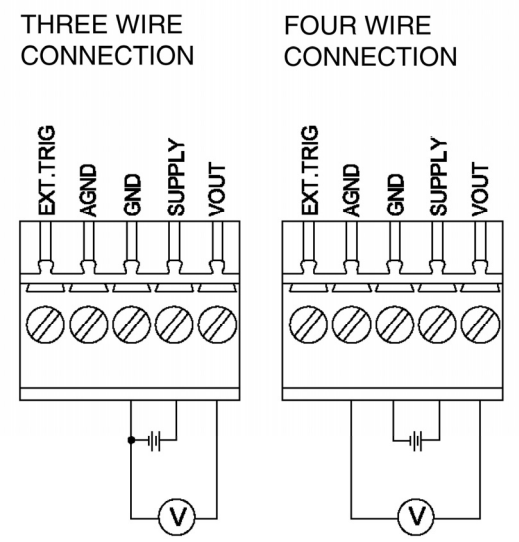

READING THE OUTPUT

The barometric pressure (P) can be calculated from the measured output voltage (Uout) using a simple equation.

$$P = P_{low} + \frac{P_{range}}{U_{range}} \cdot U_{out}$$

where:

P_{low} = Lower limit of the pressure range [hPa]
P_{range} = Pressure full range [hPa]
U_{range} = Voltage full range [V]
U_{out} = Measured output voltage [V]

Example

Pressure range	500...1100 hPa
Voltage output	0...5 V
Measured output voltage	4 V

$$P = 500hPa + \frac{(1100-500)hPa}{5V} \cdot 4V = 980hPa$$

NOTE	The low end of the output voltage range of the barometer saturates at about 50 mV.

In the frequency output 1 hPa equals 1 Hz.

AKRIBIS · www.akribis.info · contacto@akribis.info

INSERTING AND REMOVING THE COVER

The adjust buttons and the power on jumper are located inside the barometer. In order to adjust the measurement, the plastic cover of the barometer must be removed.

For safety reasons, turn off the power when opening the cover. You can power off the device by pulling out the connector from the customer port. Correspondingly, you can power on the device by plugging the connector back into the customer port.

Removing the Cover

Stick a flat-end screwdriver between the cover and the metal mounting plate. As you press the tool slightly, the cover will open up.

Inserting the Cover

Place the short and solid side of the cover against the left edge of the metal plate. Ensure that the metal clamps slide into the hollows in the cover. Then press the cover against the metal plate until it clicks in place.

INNER STRUCTURE OF THE BAROMETER

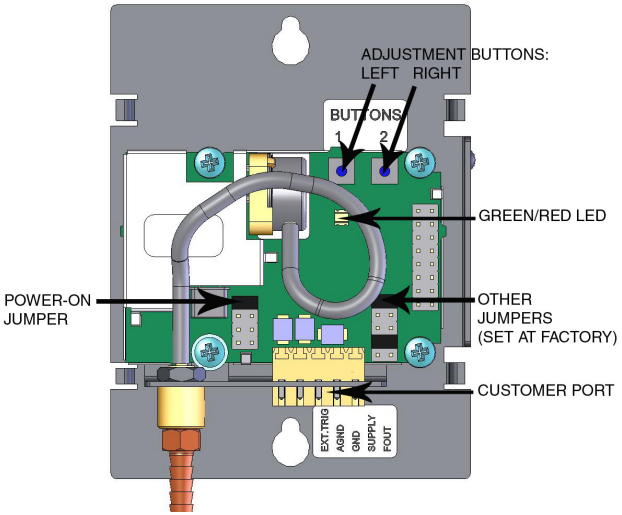

ADJUSTMENT AND CALIBRATION

Calibration of the PTB110 series barometers is NIST traceable and the barometers are supplied with a NIST traceable calibration certificate.

There are two push buttons available for the offset fine adjustment inside the barometer (see the figure on the previous page). The adjustment step is 0.05 hPa.

OPERATING THE BUTTONS

Restoring Adjustments

To restore the adjustments, press and hold down the left button while switching on the barometer. After releasing the button, a green LED starts flashing.

When the factory adjustments are in use, the green LED flashes twice. When the user adjustments are in use, the green LED flashes three times.

Now you can change the factory adjustments to user adjustments or vice versa by pressing the left button.

Return to the normal operating mode by switching the power off and on in sequence.

Using Analog Output Test Mode

To activate the test mode, press and hold down the right button while switching on the barometer.

The function forces the voltage or frequency output to 50% of the scale. As an indication of the test mode, the red LED is lit.

Return to the normal operating mode by switching the power off and on in sequence.

Offset Correction

To activate the offset correction mode, press and hold down both buttons switching on the barometer.

The green and red LEDs are lit. Now you can adjust the offset correction upwards or downwards.

- Each time when pressing the left button, the offset goes down by one step (5 Pa), and the green LED flashes once.
- Each time when pressing the right button, the offset goes up by one step (5 Pa), and the red LED flashes once.

Return to the normal operating mode by switching the power off and on in sequence.

Dimensions

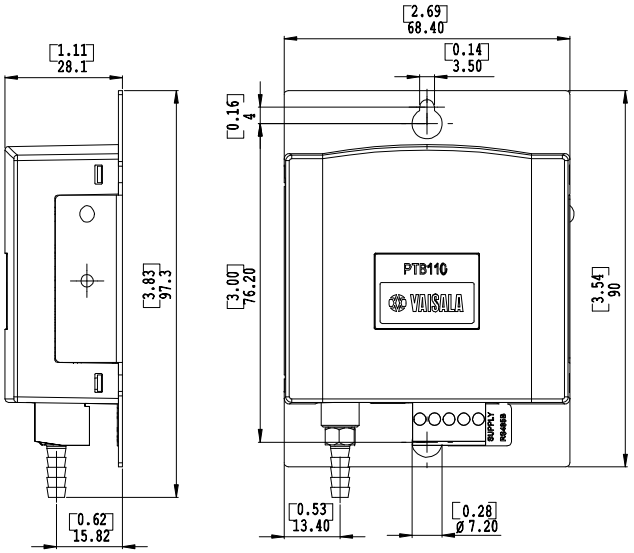

AKRIBIS · www.akribis.info · contacto@akribis.info

TECHNICAL DATA

Operating range (1 hPa=1 mbar)	Description/Value
Pressure ranges	500...1100 hPa
	600...1100 hPa
	800...1100 hPa
	600...1060 hPa
	800...1060 hPa
Temperature range	-40...+60°C
Humidity range	Non-condensing

Accuracy	Description/Value
Linearity*	±0.25 hPa
Hysteresis*	±0.03 hPa
Repeatability*	±0.03 hPa
Calibration uncertainty**	±0.15 hPa
Accuracy at +20 °C***	±0.3 hPa

Notes	Description / Value
*	Defined as ±2 standard deviation limits of end-point non-linearity, hysteresis error or repeatability error
**	Defined as ±2 standard deviation limits of inaccuracy of the working standard including traceability to NIST
***	Defined as the root sum of the squares (RSS) of end-point non-linearity, hysteresis error, repeatability error and calibration uncertainty at room temperature

Total accuracy	
+15...+25 °C	±0.3 hPa
0...+40 °C	±0.6 hPa
-20...+45 °C	±1.0 hPa
-40...+60 °C	±1.5 hPa
Long-term stability	±0.1 hPa/year

General	
Supply voltage	10...30 VDC
Supply voltage control	With TTL level trigger
Supply voltage sensitivity	Negligible
Current consumption	Less than 4 mA
	Less than 1 µA in shutdown mode
Output voltage	0...2.5 VDC
	0...5 VDC
Output frequency	500...1100 Hz
Resolution	0.1 hPa
Load resistance	10 kohm minimum
Load capacitance	47 nF maximum
Settling time	1 s to reach full accuracy after power-up
Response time	500 ms to reach full accuracy after a pressure step
Acceleration sensitivity	Negligible
Pressure connector	M5 (10-32) internal thread
Pressure fitting	Barbed fitting for 1/8"
Minimum pressure limit	0 hPa abs
Maximum pressure limit	2000 hPa abs
Electrical connector	A removable connector for five wires (AWG 28...16)
Terminals	Pin 1: External triggering
	Pin 2: Signal ground
	Pin 3: Supply ground
	Pin 4: Supply voltage
	Pin 5: Supply output
Housing material plastic cover	ABS/PC blend
Metal mounting plate	Al
Weight	90 g
Housing classification	IP 32

SAFETY PRECAUTIONS

The PTB110 delivered to you has been tested for safety and approved as shipped from the factory. Note the following precautions:

WARNING	Ground the product, and verify outdoor installation grounding periodically to minimize shock hazard.

CAUTION	Do not modify the device. Improper modification can damage the product or lead to malfunction.

ESD Protection

Electronic Discharge (ESD) can cause immediate or latent damage to electronic circuits. Vaisala products are adequately protected against ESD for their intended use. However, it is possible to damage the product by delivering electrostatic discharges when touching, removing, or inserting any objects inside the equipment housing.

To make sure you are not delivering high static voltages yourself:

- Handle ESD sensitive components on a properly grounded and protected ESD workbench. When this is not possible, ground yourself to the equipment chassis before touching the boards. Ground yourself with a wrist strap and a resistive connection cord. When neither of the above is possible, touch a conductive part of the equipment chassis with your other hand before touching the boards.
- Always hold the boards by the edges and avoid touching the component contacts.

AKRIBIS · www.akribis.info · contacto@akribis.info

RECYCLING

Recycle all applicable material.

Dispose of batteries and the unit according to statutory regulations. Do not dispose of with regular household refuse.

WARRANTY

Vaisala hereby represents and warrants all Products manufactured by Vaisala and sold hereunder to be free from defects in workmanship or material during a period of twelve (12) months from the date of delivery save for products for which a special warranty is given. If any Product proves however to be defective in workmanship or material within the period herein provided Vaisala undertakes to the exclusion of any other remedy to repair or at its own option replace the defective Product or part thereof free of charge and otherwise on the same conditions as for the original Product or part without extension to original warranty time. Defective parts replaced in accordance with this clause shall be placed at the disposal of Vaisala.

Vaisala also warrants the quality of all repair and service works performed by its employees to products sold by it. In case the repair or service works should appear inadequate or faulty and should this cause malfunction or nonfunction of the product to which the service was performed Vaisala shall at its free option either repair or have repaired or replace the product in question. The working hours used by employees of Vaisala for such repair or replacement shall be free of charge to the client. This service warranty shall be valid for a period of six (6) months from the date the service measures were completed.

This warranty is however subject to following conditions:

a) A substantiated written claim as to any alleged defects shall have been received by Vaisala within thirty (30) days after the defect or fault became known or occurred, and

b) The allegedly defective Product or part shall, should Vaisala so require, be sent to the works of Vaisala or to such other place as Vaisala may indicate in writing, freight and insurance prepaid and properly packed and labelled, unless Vaisala agrees to inspect and repair the Product or replace it on site.

This warranty does not however apply when the defect has been caused through

a) normal wear and tear or accident;

b) misuse or other unsuitable or unauthorized use of the Product or negligence or error in storing, maintaining or in handling the Product or any equipment thereof;

c) wrong installation or assembly or failure to service the Product or otherwise follow Vaisala's service instructions including any repairs or installation or assembly or service made by unauthorized personnel not approved by Vaisala or replacements with parts not manufactured or supplied by Vaisala;

d) modifications or changes of the Product as well as any adding to it without Vaisala's prior authorization;

e) other factors depending on the Customer or a third party.

Notwithstanding the aforesaid Vaisala's liability under this clause shall not apply to any defects arising out of materials, designs or instructions provided by the Customer.

This warranty is expressly in lieu of and excludes all other conditions, warranties and liabilities, express or implied, whether under law, statute or otherwise, including without limitation any implied warranties of merchantability or fitness for a particular purpose and all other obligations and liabilities of Vaisala or its representatives with respect to any defect or deficiency applicable to or resulting directly or indirectly from the Products supplied hereunder, which obligations and liabilities are hereby expressly cancelled and waived. Vaisala's liability shall under no circumstances exceed the invoice price of any Product for which a warranty claim is made, nor shall Vaisala in any circumstances be liable for lost profits or other consequential loss whether direct or indirect or for special damages.