USER GUIDE

# PS 1000.5Y

Radwag

Distributed by AKRIBIS

# User manual

**IMMU-111-23-05-26-EN**

# 5Y Series Balances

UYA 5Y Ultra-Microbalances
MYA 5Y Microbalances
MYA 5Y.P Microbalances for pipettes calibration
MYA 5Y.F Microbalances for filters
XA 5Y.M.A.S Microbalances for stents weighing
XA 5Y.M Microbalances
XA 5Y Analytical Balances
AS 5Y Analytical Balances
PS.5Y Precision Balances
5Y.PM Precision Balances
5Y.HRP Balances

**radwag.com**
Scan the QR code to view additional scientific material that may be of interest to you.
There you will find more useful information in an accessible format!

AKRIBIS www.akribis.info contacto@akribis.info

Congratulations and thank you for selecting RADWAG product.
You have purchased a device that has been designed and manufactured to give you years of service.
Please read this user manual carefully, this shall guarantee reliable operation.

MAY 2026

## CONTENTS


**1. GENERAL INFORMATION ..... 9**
1.1. Dimensions ..... 9
1.2. Connectors ..... 17
1.3. Intended Use ..... 17
1.4. Precautions ..... 18
1.5. Warranty Conditions ..... 18
1.6. Supervision Over Metrological Parameters ..... 18
1.7. User Manual Significance ..... 19
1.8. Operator Training ..... 19
**2. TRANSPORT AND STORAGE ..... 19**
2.1. Delivery Check ..... 19
2.2. Packaging ..... 19
**3. UNPACKING AND INSTALLATION ..... 19**
3.1. Workstation ..... 19
3.2. Unpacking ..... 20
3.3. Standard Delivery Components ..... 20
3.4. Maintenance Activities ..... 28
3.5. Connecting the Balance to the Mains ..... 33
3.6. Temperature Stabilization Time ..... 33
3.7. Connecting Peripheral Equipment ..... 33
3.8. Balances with Integrated Ionizer ..... 33
**4. START-UP ..... 34**
4.1. How to properly turn off the scale's power supply ..... 35
**5. PROGRAM STRUCTURE ..... 36**
**6. WEIGHING RESULT WINDOW ..... 37**
**7. LOG IN ..... 38**
**8. OPERATING THE MENU ..... 39**
8.1. Operation Panel ..... 40
8.2. Voice Commands ..... 40
8.3. Return to Weighing ..... 41
**9. ADJUSTMENT ..... 41**
9.1. Internal Adjustment ..... 42
9.2. External Adjustment ..... 42
9.3. Adjustment Test ..... 42
9.4. Automatic Adjustment ..... 42
9.5. Automatic Adjustment Time ..... 43
9.6. Report Printout ..... 43
9.7. GLP Project ..... 43
9.8. Adjustment History ..... 44
**10. ADMINISTRATOR PANEL ..... 44**
10.1. Password Settings ..... 45
10.2. Operator Accounts Settings ..... 45

10.3. Permissions Management ..... 47
10.4. Remote access password ..... 48
**11. PROFILES ..... 48**
11.1. Creating a Profile ..... 49
11.2. Profile Structure ..... 50
11.2.1. Settings ..... 50
11.2.2. Working Modes ..... 51
11.2.3. Readout ..... 51
11.2.4. Units ..... 53
**12. WORKING MODES – General Information ..... 53**
12.1. Running Working Mode ..... 55
12.2. Working Mode Parameters ..... 56
12.3. Quick Access Buttons, Proximity Sensors ..... 56
12.3.1. Proximity Sensors ..... 58
12.3.2. Automatic Door ..... 58
12.4. Information ..... 59
12.5. Printouts ..... 59
12.6. Profiles ..... 61
**13. WEIGHING ..... 62**
13.1. Weighing Unit Selection ..... 62
13.2. Good Weighing Practice ..... 62
13.3. Levelling ..... 63
13.4. Balance Zeroing ..... 65
13.5. Balance Taring ..... 65
13.6. Use of Air Buoyancy Compensation Factor ..... 66
13.7. Additional Parameters for a Weighing Process ..... 68
13.8. Cooperation with Titrators ..... 72
13.9. Ambient Conditions - Vibrations ..... 72
**14. PARTS COUNTING ..... 76**
14.1. Mode Related Settings ..... 76
14.2. Parts Counting – Quick Access Buttons ..... 77
14.3. Setting Reference Sample Mass by Entering Mass of a Single Part ..... 78
14.4. Setting Reference Sample Mass by Determining Mass of a Single Part ..... 78
14.5. Setting Reference Sample Mass by Acquiring Mass of a Single Part from the Database ..... 78
14.6. Single Part Mass Update in the Database ..... 79
14.7. Parts Counting Procedure ..... 79
14.8. Checkweighing for Parts Counting Mode ..... 80
14.9. Dosing in Parts Counting Mode ..... 83
**15. CHECKWEIGHING ..... 84**
15.1. Making Use of Checkweighing Thresholds ..... 84
15.2. Mode Related Settings ..... 85
**16. DOSING ..... 85**
16.1. Making Use of Products Database in the Course of Dosing Operation ..... 86
16.2. Mode Related Settings ..... 87
**17. PERCENT WEIGHING AGAINST REFERENCE SAMPLE MASS ..... 87**
17.1. Sample Mass and Reference Sample Mass Comparison ..... 87

17.2. Checkweighing and Dosing in Percent Weighing Mode ..... 88
17.3. Bar Graph ..... 89
17.4. Mode Related Settings ..... 90
**18. DENSITY ..... 90**
18.1. Density Determination Kit ..... 91
18.2. Assembly ..... 91
18.3. Solid Body Density Determination ..... 92
18.4. Liquid Density Determination ..... 93
18.5. Air Density ..... 93
18.6. Determining Density Using Pycnometer ..... 94
18.7. Mode Related Settings ..... 95
18.8. Printouts ..... 96
18.9. Performed Density Determinations Report ..... 97
**19. ANIMAL WEIGHING ..... 97**
19.1. Animal Weighing Settings ..... 98
19.2. Mode Related Settings ..... 98
**20. FORMULATIONS ..... 99**
20.1. Mode Related Settings ..... 99
20.2. Formulations – Quick Access Buttons ..... 100
20.3. Adding Formulation to the Formulations Database ..... 101
20.4. Using Formulations in Weighing ..... 101
20.5. Printouts ..... 104
**21. STATISTICS ..... 105**
21.1. Buttons and Information Settings ..... 105
21.2. Additional Settings for Statistics ..... 105
21.3. Measurement Series Parameters ..... 106
**22. PIPETTE CALIBRATION ..... 107**
22.1. Mode Related Settings ..... 112
22.2. Pipettes Calibration – Quick Access Buttons ..... 113
22.3. Adding a Pipette to Pipettes Database ..... 113
22.4. Printouts ..... 114
22.5. Pipette Calibration Start-Up ..... 115
22.6. Performed Pipette Calibrations Report ..... 116
**23. DIFFERENTIAL WEIGHING ..... 118**
23.1. Mode Related Settings ..... 118
23.2. Differential Weighing - Quick Access Buttons ..... 119
23.3. Adding Series to Series Database ..... 120
23.4. Differential Weighing Process Example ..... 120
23.5. Copy Tare ..... 125
23.6. Sample Selection ..... 125
23.7. Deleting Values ..... 125
23.8. Printouts ..... 126
**24. STATISTICAL QUALITY CONTROL- SQC ..... 127**
24.1. SQC Mode Start-Up ..... 128
24.2. Mode Related Settings ..... 129
24.3. Control Operation ..... 130

24.4. SQC Control Report .....132
**25. PEAK HOLD ..... 132**
25.1. Mode Related Settings .....132
25.2. Means of Operation .....133
**26. PACKAGED GOODS CONTROL ..... 133**
26.1. PGC Mode Start-Up.....134
26.2. Control Settings .....135
26.3. PGC Mode Local Settings .....135
26.4. Editing Product for Control Process .....135
26.5. Control Process Start .....137
26.6. Abort Control Procedure .....138
26.7. Non-Destructive Average Tare Control Mode .....138
26.8. Non-Destructive Empty-Full Control Mode .....143
26.9. Destructive Empty-Full And Full-Empty Control Mode .....144
26.10. Control According To Internal Criteria .....144
26.11. Reports.....145
**27. MASS CONTROL..... 146**
27.1. Mass Control Global Settings .....146
27.2. Mass Control Process .....147
27.3. Printouts .....148
27.4. Performed Mass Control Report .....149
**28. DATABASES..... 149**
28.1. Database Operations .....149
28.2. Operators.....150
28.3. Products.....155
28.4. Customers.....157
28.5. Formulations .....157
28.6. Pipettes .....157
28.7. Minimum Sample .....158
28.8. Packaging.....159
28.9. Warehouses.....160
28.10. Printouts .....160
28.11. Series .....162
28.12. Universal Variables.....162
28.13. Databases Management .....163
28.13.1. Delete Databases ..... 163
**29. REPORTS..... 164**
29.1. Reports Operations.....164
29.2. Weighings .....165
29.3. Formulations Reports.....165
29.4. Density Reports .....166
29.5. Control Reports.....167
29.6. SQC Statistics .....169
29.7. Average Tares.....170
29.8. Pipette Calibration Reports .....171
29.9. Mass Controls .....172
29.10. Ambient Conditions .....173

29.11. Reports Management ..... 173
29.11.1. Export Weighing Database to a File ..... 174
29.11.2. Delete Weighings and Reports ..... 175
**30. COMMUNICATION ..... 176**
30.1. RS232 Ports Settings ..... 176
30.2. ETHERNET Port Settings ..... 177
30.3. Wi-Fi Settings ..... 177
30.3.1. Hot Spot - General Information ..... 178
30.3.2. Hot Spot Activation ..... 178
30.4. TCP Settings ..... 180
30.5. Virtual COM Settings ..... 181
**31. PERIPHERALS ..... 181**
31.1. Computer ..... 181
31.1.1. Computer address ..... 182
31.1.2. Permanent transmission ..... 182
31.1.3. Interval ..... 183
31.1.4. Weighing printout template ..... 183
31.1.5. Cooperation with E2R System ..... 183
31.2. Printer ..... 184
31.3. Barcode Scanner ..... 186
31.3.1. Barcode Scanner Port ..... 187
31.3.2. Prefix/Suffix ..... 187
31.3.3. Field Selection ..... 187
31.3.4. Test ..... 189
31.4. Ambient Conditions Module ..... 189
31.5. Automatic Feeder ..... 189
31.6. IM02 communication module ..... 189
31.6.1. Activation of IM02-to-scale connection ..... 189
31.6.2. Current Loop ..... 190
31.6.2.1. Operating mode ..... 190
31.6.2.2. Adjustment analogue output ..... 191
31.7. Modbus TCP ..... 192
**32. INPUTS / OUTPUTS ..... 192**
32.1. Input Setup ..... 192
32.2. Output Setup ..... 192
**33. MISCELLANEOUS PARAMETERS ..... 193**
33.1. Interface Language ..... 193
33.2. Date and Time ..... 193
33.3. Extension Module ..... 195
33.4. Sound ..... 195
33.5. Visual printout cofirmation ..... 195
33.6. Sleep Mode ..... 196
33.7. Display Brightness ..... 196
33.8. Vibration Detection ..... 196
33.9. Level Control ..... 196
33.10. Decimal Point ..... 197
33.11. Proximity Sensors Sensitivity ..... 197
33.12. Doorway Degree ..... 197
33.13. Automatic Ionization ..... 198
33.14. Autotest ..... 198

33.15. Start-Up Logo .....201
33.16. Export of System Events .....201
33.17. Text-to-speech conversion .....201
**34. SCHEDULED TASKS ..... 202**
34.1. Adjustment.....202
34.1. Message.....203
**35. UPDATE..... 205**
**36. ABOUT (system info) ..... 205**
**37. COMMUNICATION PROTOCOL ..... 206**
37.1. Manual Printout / Automatic Printout .....206
**38. PERIPHERAL DEVICES..... 207**
**39. ERROR MESSAGES..... 207**
**40. ADDITIONAL EQUIPMENT ..... 207**
**41. ANNEX B – Programmable Buttons List..... 208**

# 1. GENERAL INFORMATION

## 1.1. Dimensions

UYA 5Y Ultra-Microbalances and MYA 5Y Microbalances

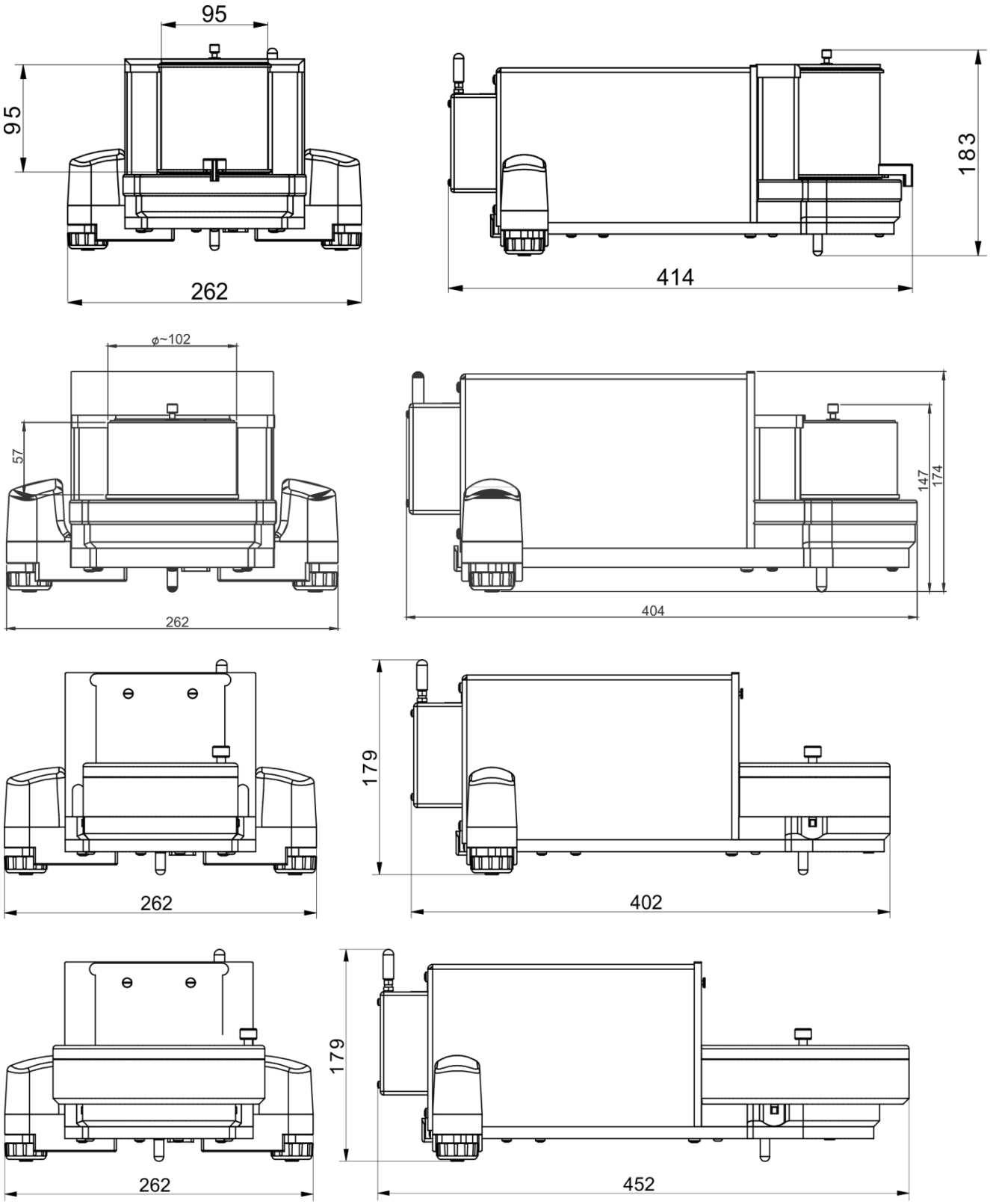

## Indicator

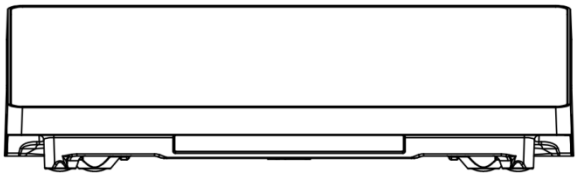

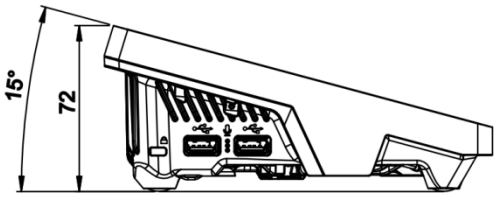


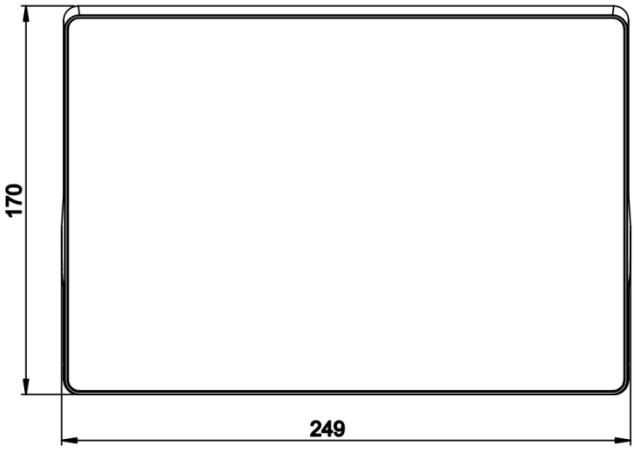


## XA 5Y.M.A Microbalances

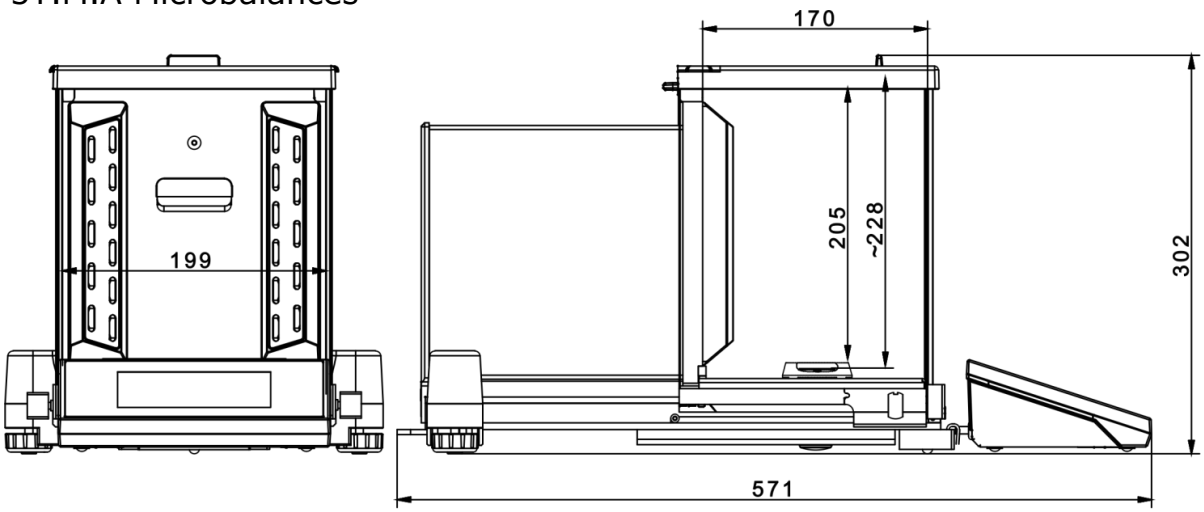


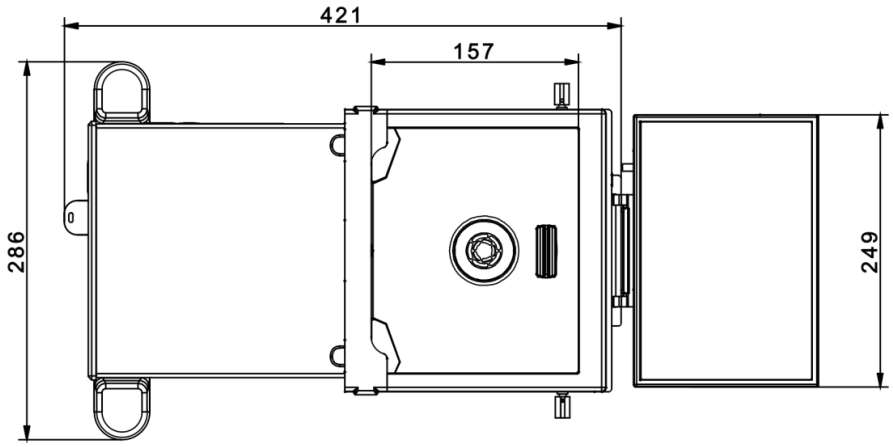

## XA 5Y.M Microbalances

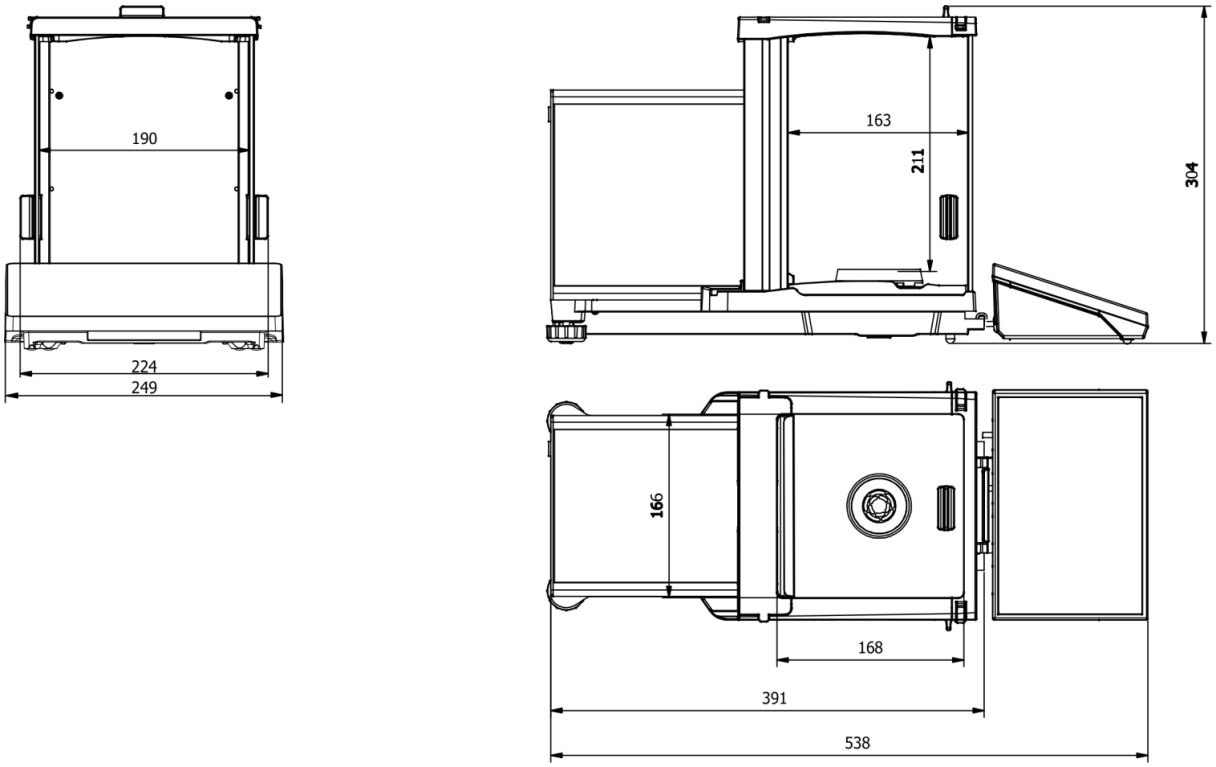


## XA 5Y.A Series Balances

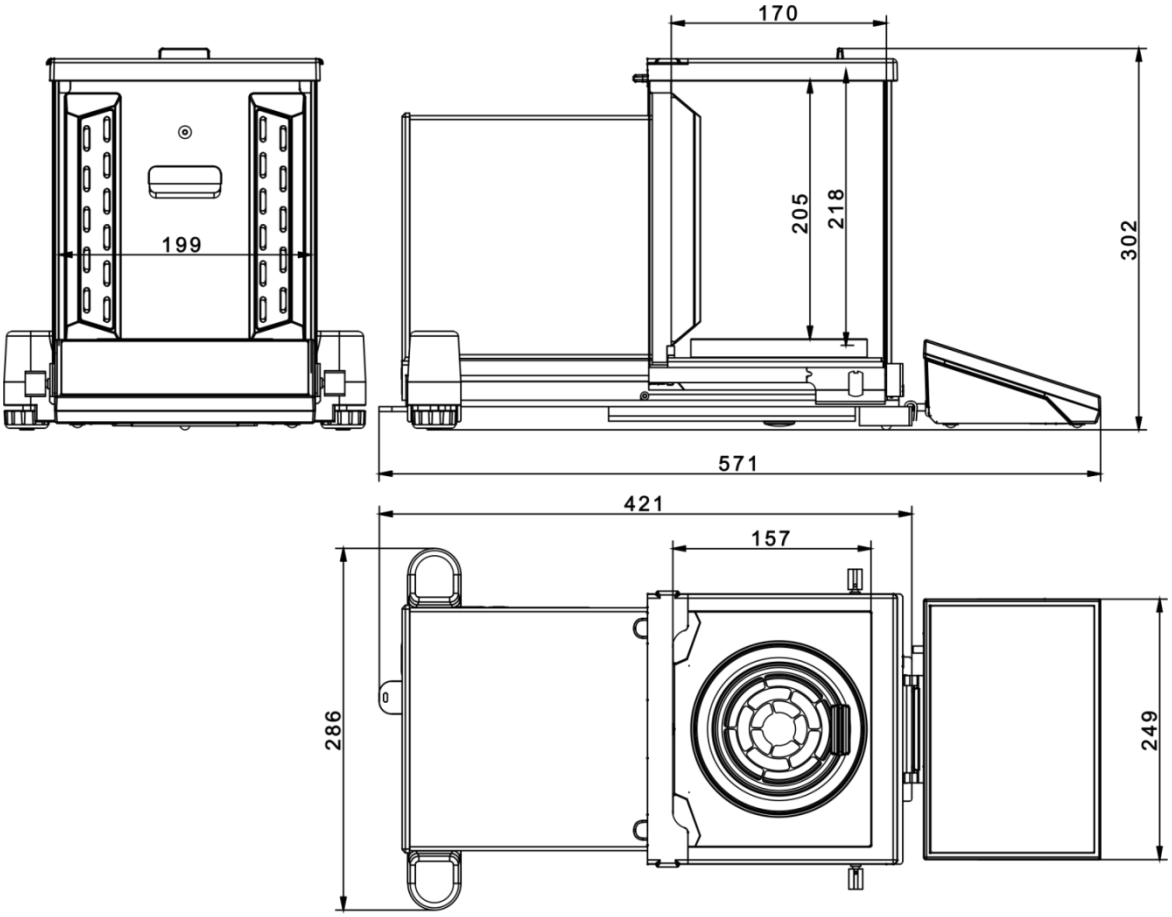

## XA 5Y Series Balance

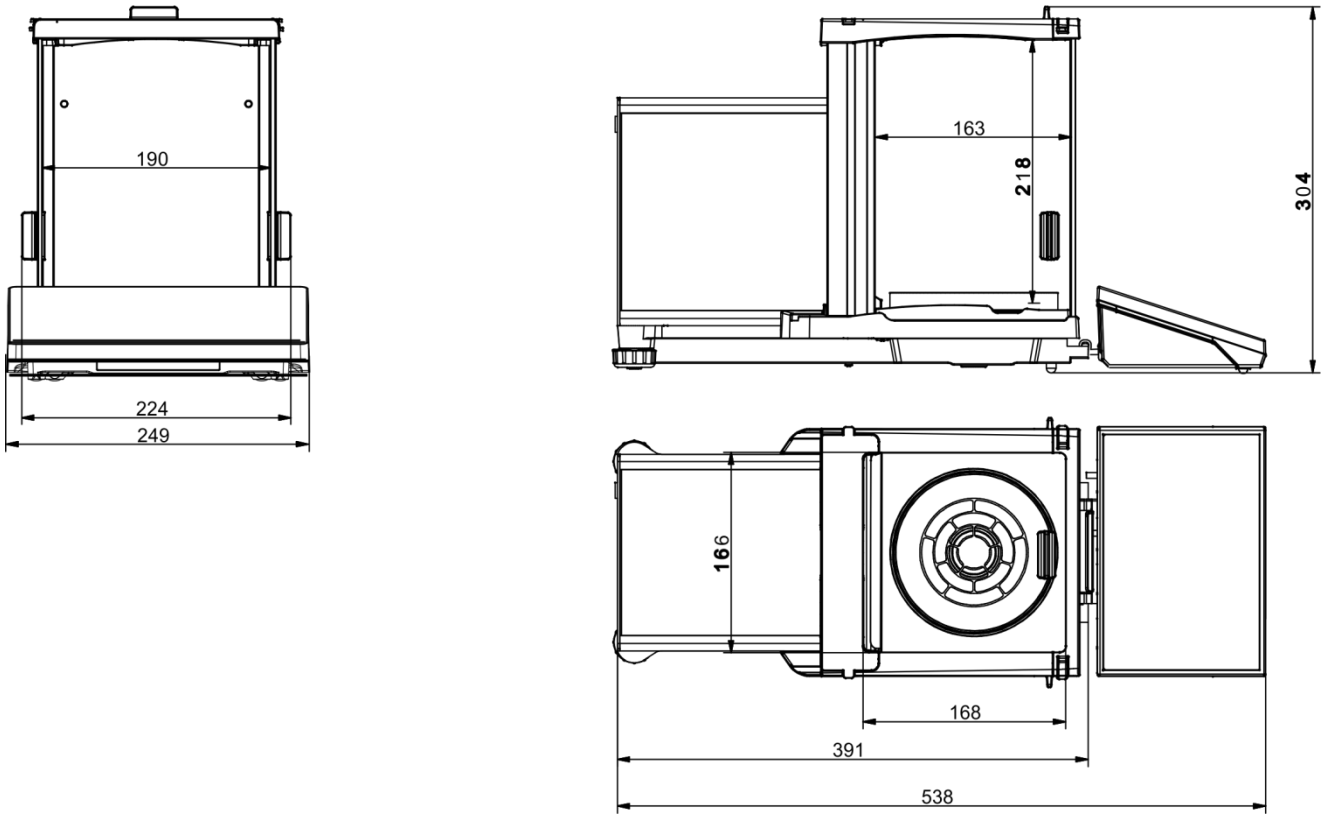


## XA 5Y.F Series Balances

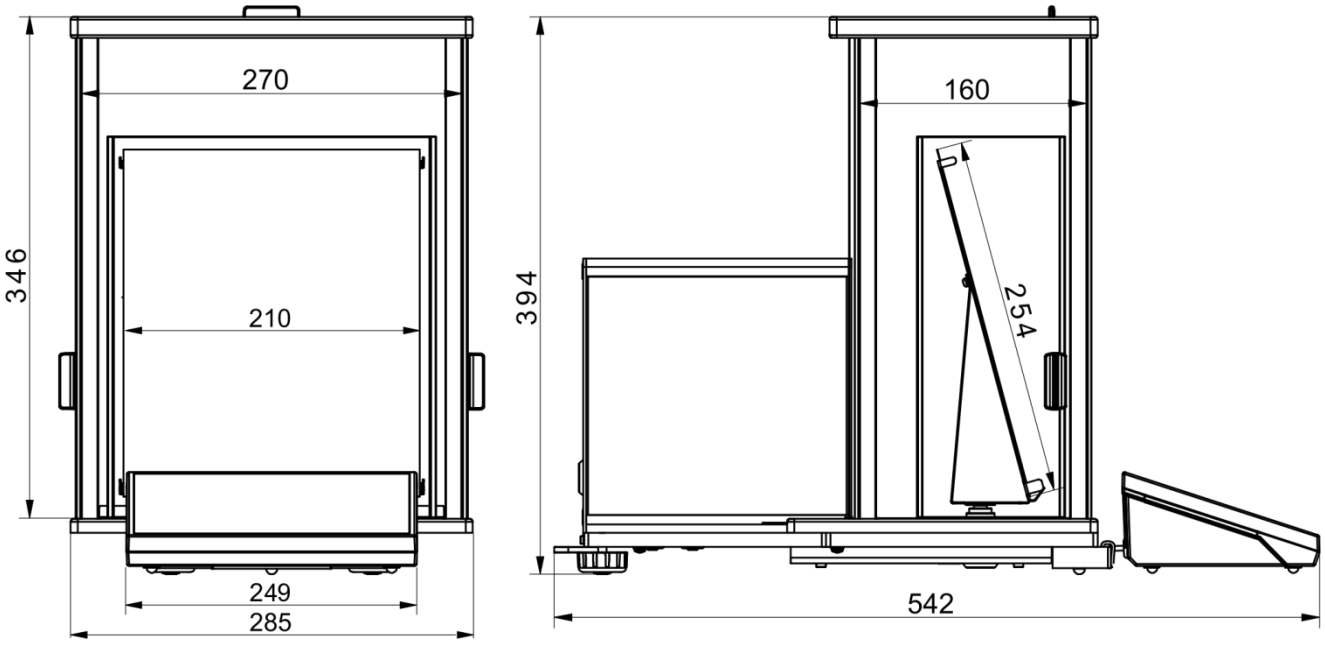

AS.5Y with d=0.01mg

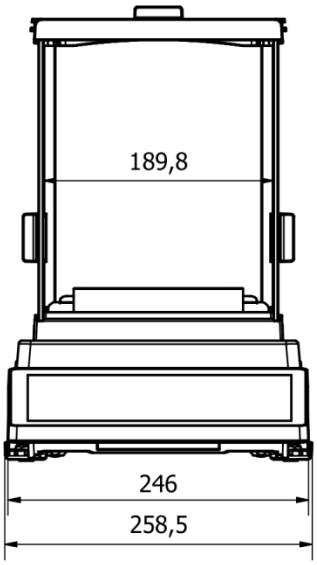


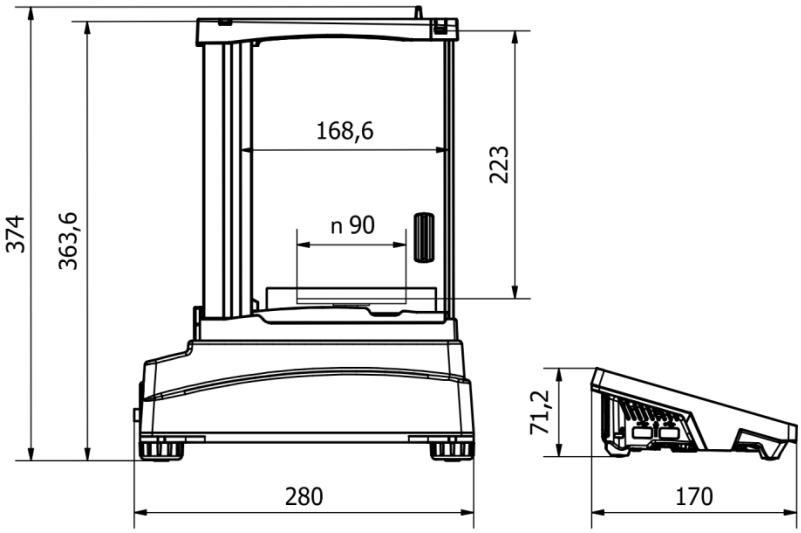


AS.5Y with d=0.1mg

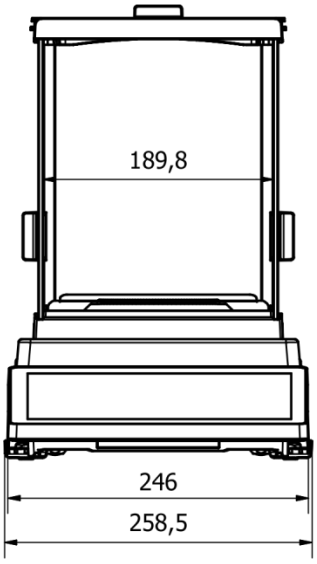


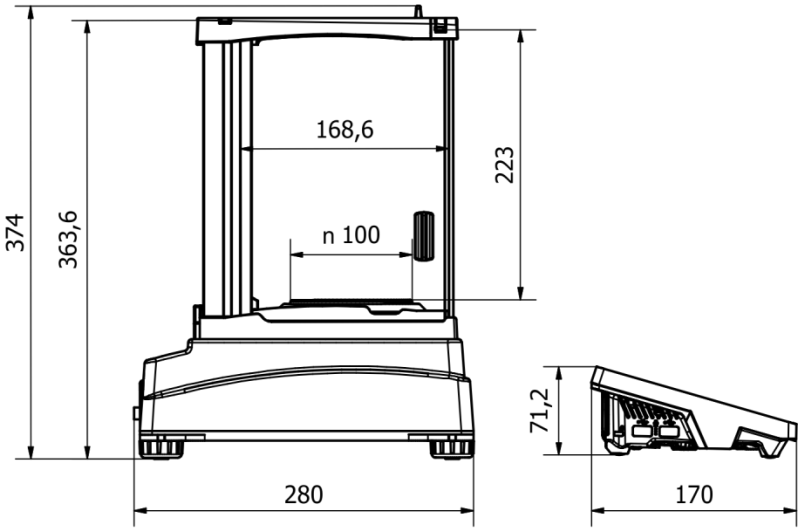

## PS.5Y with d=0.001g

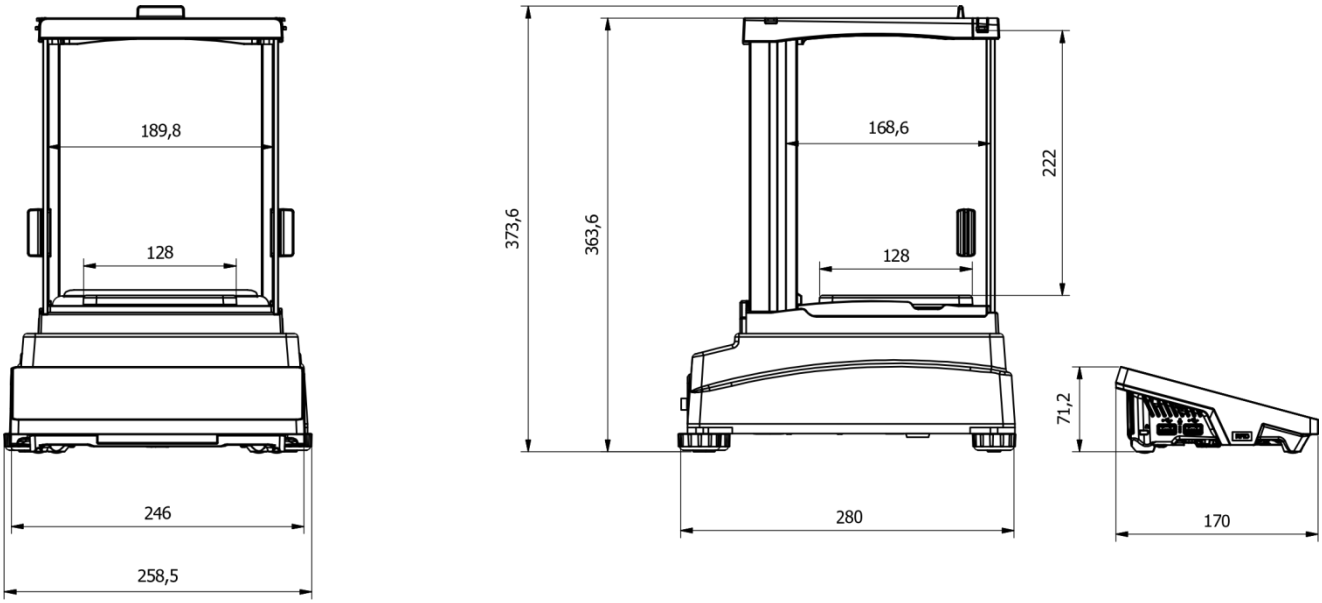


## PS.5Y with d=0.01g

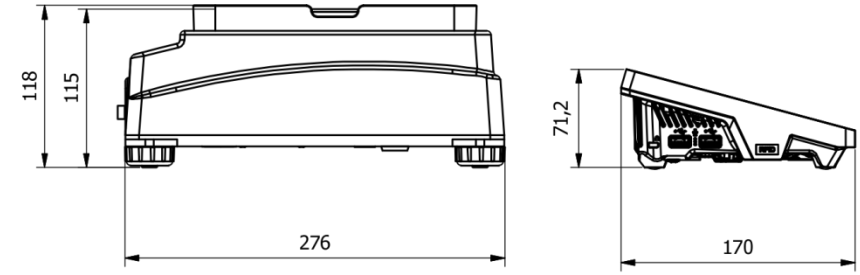


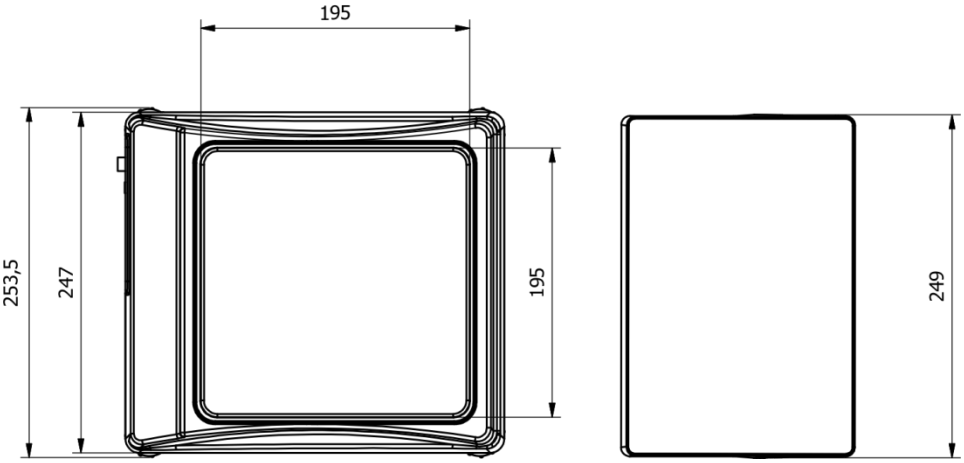

5Y.PM with d=0.01g

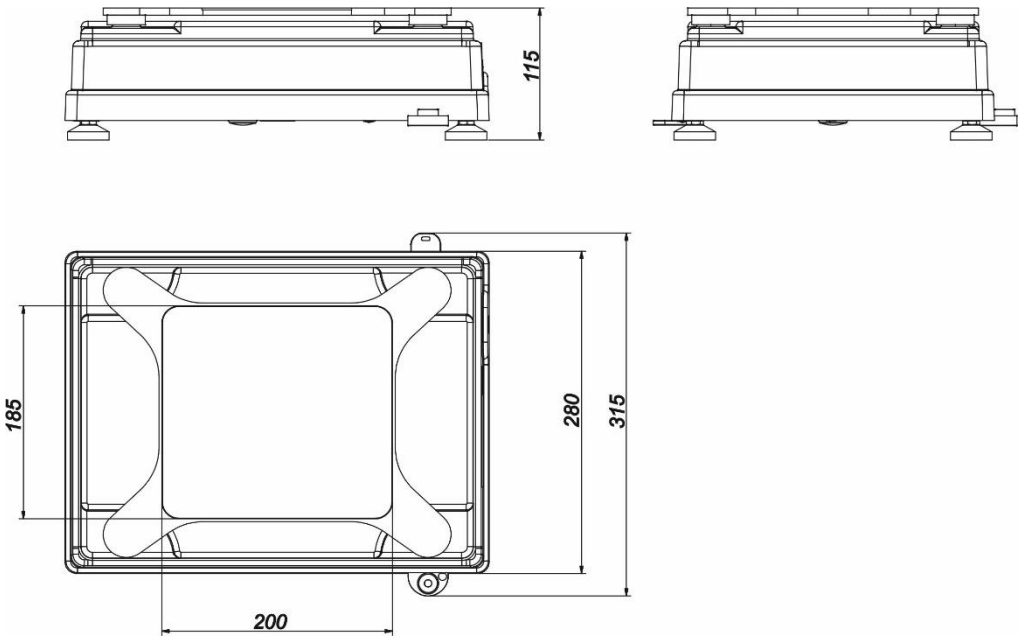


5Y.PM with d=0.1g

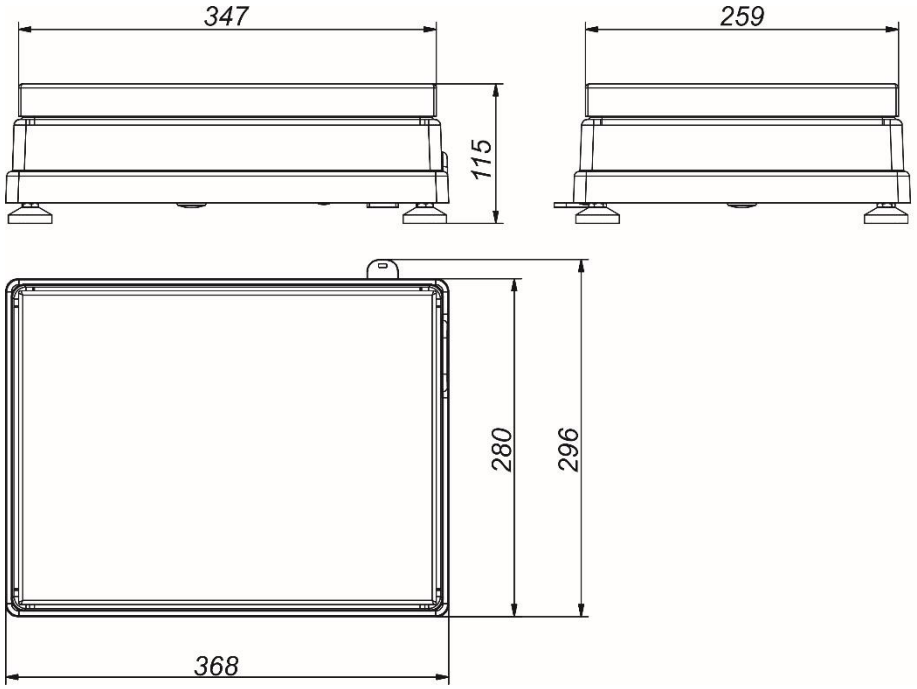

5Y.PM with d=0.5g, d=1g

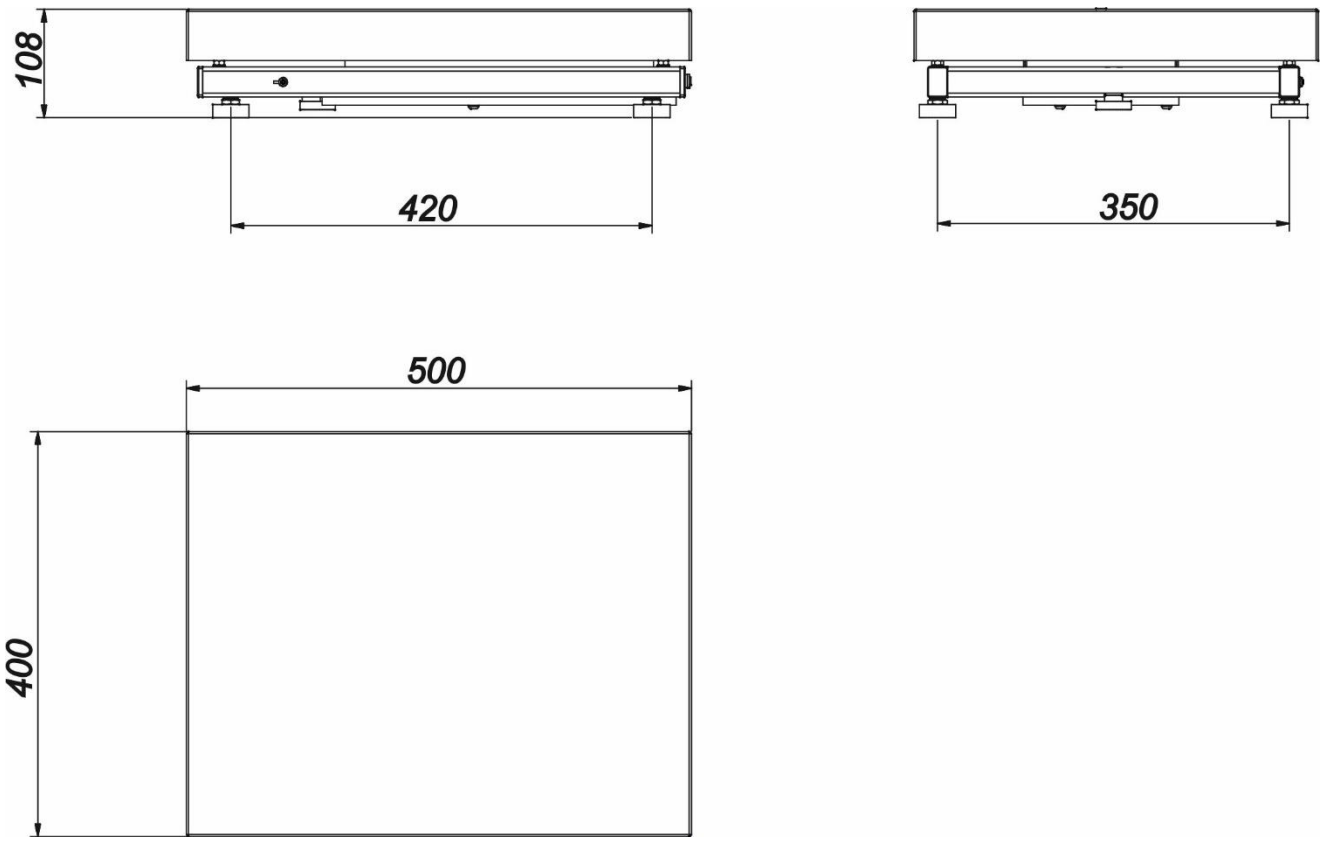


5Y.HRP Balances

For information on dimensions and installation read a separate manual: 5Y HRP High Resolution Platform; IMMU-31-xx-xx-xx-EN.

## 1.2. Connectors

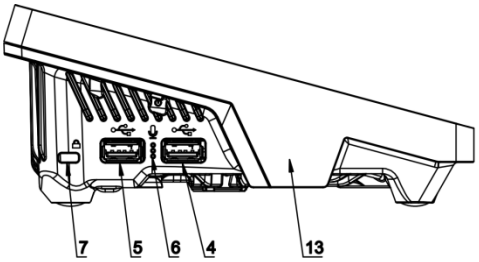


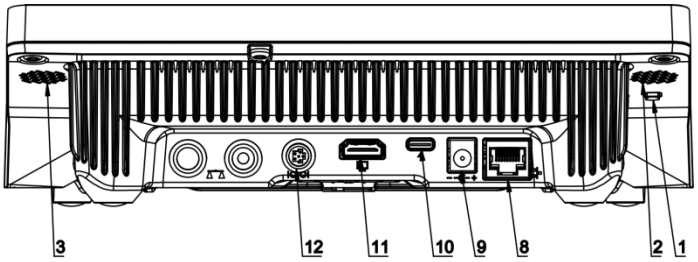


Top view

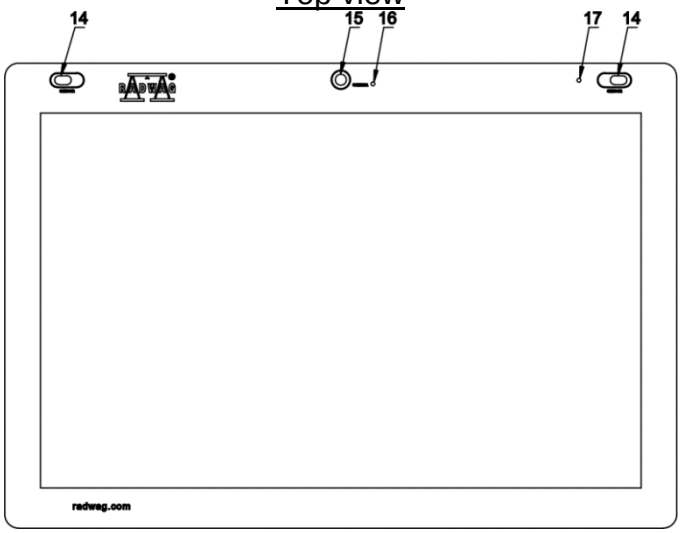


| | | | |
|---|---|---|---|
| ***1*** | Button used to hard restart or to switch the balance off/on. | ***10*** | Power supply socket – USB type C |
| ***2*** | Left speaker | ***11*** | HDMI socket |
| ***3*** | Right speaker | ***12*** | Media box socket – RS 232 (COM3) |
| ***4*** | USB type A | ***13*** | RFID sensor |
| ***5*** | USB type A | ***14*** | Proximity sensors |
| ***6*** | Microphone | ***15*** | Camera |
| ***7*** | Kensington Lock | ***16*** | Camera diode |
| ***8*** | Ethernet socket | ***17*** | Signalling diode |
| ***9*** | Power supply socket | | |

## 1.3. Intended Use

5Y series balances have been designed to enable precise determination of mass in laboratory.
Thanks to the weighing indicator, it is possible to connect the IM02 communication module. In its standard design, the IM02 communication module expands the range of interfaces to include RS 232 IM02, Virtual COM, 4WE/4WY.

### 1.4. Precautions

- Prior to the first use, carefully read this user manual. Use the device only as intended.
- Do not operate the touch panel using sharp-edged tools (knife, screwdriver, etc.).
- Place loads in the centre of the weighing pan.
- Load the weighing pan with loads of gross weight which does not exceed the maximum capacity.
- Mind not to leave heavy loads on the weighing pan for longer periods of time.
- In case of damage, immediately unplug the device from the mains.
- The balance to be decommissioned must be decommissioned in accordance with valid legal regulations.
- Do not use the balance in areas endangered with explosion. The balance is not intended to be operated in hazardous areas.

### 1.5. Warranty Conditions

A. RADWAG is obliged to repair or exchange all elements that appear to be faulty by production or by construction.
B. Defining defects of unclear origin and means of their elimination can only be realized with assistance of the manufacturer and user representatives.
C. RADWAG does not bear any responsibility for damage or loss resulting from unauthorized or inadequate performing of production or service processes.
D. The warranty does not cover:
   - mechanical damage caused by product exploitation other than intended, damage of thermal and chemical origin, and damage caused by lightning, overvoltage in the power grid or other random event,
   - damage caused by product exploitation other than intended, damage, when security seal stickers protecting balance housing against unauthorized access are removed or broken,
   - damage caused by liquids and natural wear, or by overloading the measuring mechanism,
   - damage caused by inappropriate setting or by electrical system failures,
   - inappropriate cleaning habits.
E. Loss of warranty takes place if:
   - a repair is carried out outside RADWAG authorized service point,
   - service claims intrusion into mechanical or electronic construction by unauthorized people,
   - the balance does not feature security stickers.
F. For detailed warranty conditions read the warranty certificate.

### 1.6. Supervision Over Metrological Parameters

Metrological parameters need to be verified in determined time intervals. Inspection frequency depends on ambient conditions in which the balance is operated, type of carried out processes and adopted quality management system.

### 1.7. User Manual Significance

Even if you are experienced and have already worked with this type of balance, you are still obliged to read this user manual carefully prior to switching the device on. This user manual provides all necessary operation-related information. Following the user manual guidelines guarantees correct weighing instrument performance.

### 1.8. Operator Training

The balance must be operated and supervised only by personnel who have been trained to use such type of a weighing instrument.

## 2. TRANSPORT AND STORAGE

### 2.1. Delivery Check

Upon delivery, it is necessary to check the package and the device. Make sure that your package bears no signs of damage. Otherwise, contact the manufacturer's representative.

### 2.2. Packaging

Keep all package elements should your device be transported in the future. Remember that only original packaging can be used for shipping purposes. Prior to packing, uncouple any cables, remove any separable components (weighing pan, shields, inserts). The balance components must be packed into an original packaging, this is to protect them against potential damage during transportation.

## 3. UNPACKING AND INSTALLATION

### 3.1. Workstation

- Operate the device in a workroom free of vibrations and shakes, where there are no air drafts nor dust.
- Make sure that the ambient temperature ranges between: +10 °C ÷ +40 °C,
- Make sure that the relative humidity is not higher than 80%.
- Make sure that in the course of balance operation, the room temperature changes slowly and gradually.
- Place the balance either on a robust-design table or on a wall bracket which is both distant from heat sources and insusceptible to vibrations.
- Take special precaution while weighing magnetic objects, part of the balance is a strong magnet.
- Ground the balance’s base should static electricity affect the weighing result. The grounding screw is located at the back of the balance base.
- Ultra-microbalances and other devices installed in the place of use by RADWAG employees cannot be moved to another location. Only authorized RADWAG employee can move the device to another location.

### 3.2. Unpacking

Cut the adhesive tape. Take the balance out of the packaging. Open the accessory box, take the balance components out of it.

### 3.3. Standard Delivery Components

- Balance
- Bottom weighing chamber shield (*XA*)
- Centring ring (*XA*)
- Weighing chamber shield/lid (UYA, MYA)
- Weighing pan
- Weighing pan shield
- Bottom ring (MYA, model C)
- Power supply

**UYA 5Y, MYA 5Y Microbalances**

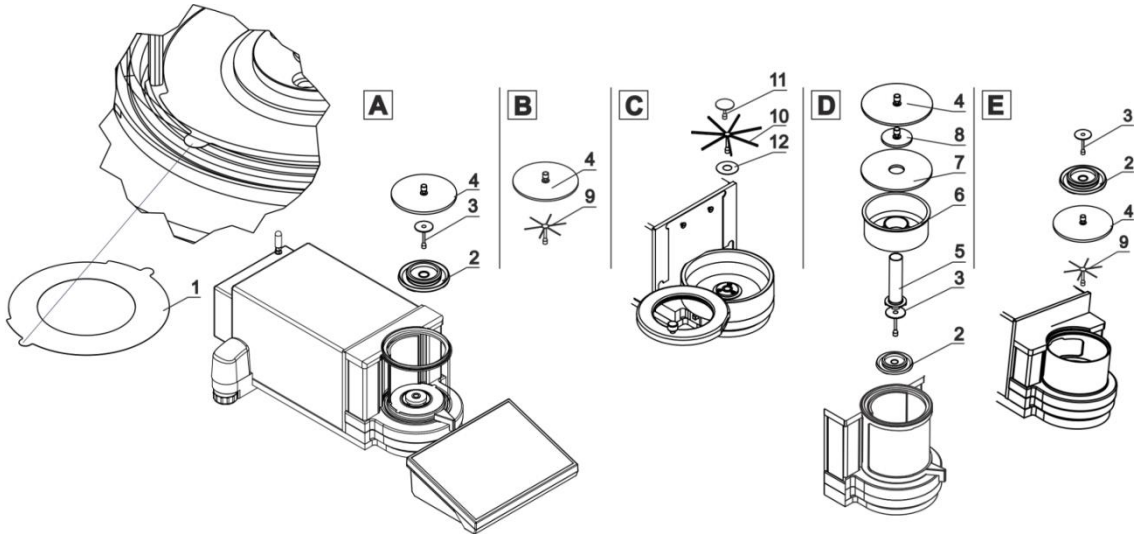


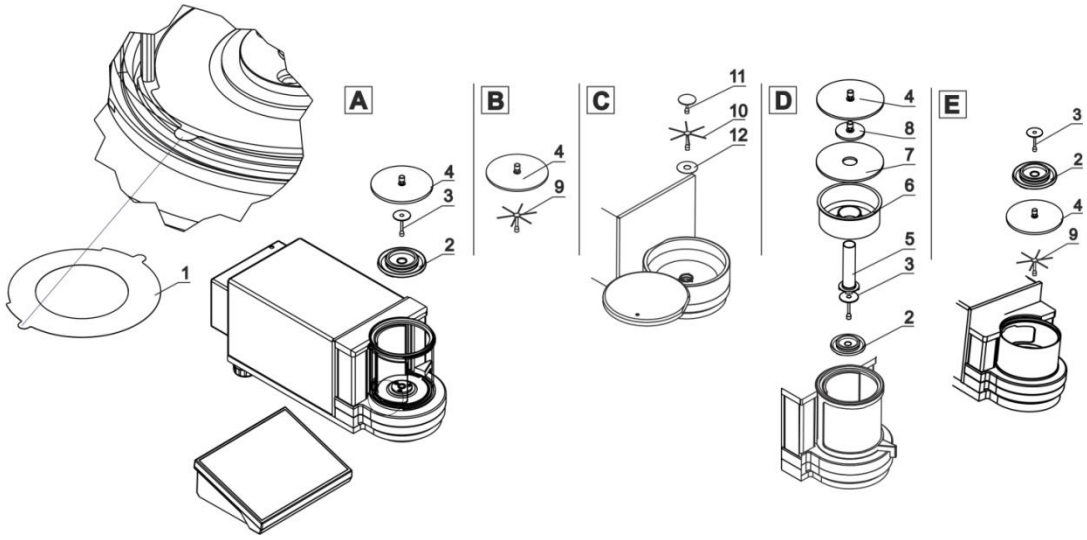


***Caution:*** *Make sure there is no protective sticker 1 while carrying out the measurement (see the above diagrams). It is obligatory to remove the sticker prior to chamber assembly.*

Install components following the above diagrams.

| | |
|---|---|
| **A – standard balance (UYA and MYA)**<br><br>2. Draft shield<br>3. Weighing pan<br>4. Glass lid for the weighing chamber | **B – MYA 0.8/3.5Y microbalance**<br><br>Balances are equipped with standard weighing pan (A) and weighing pan for filters.<br>9. Weighing pan for filters<br>4. Glass lid for the weighing chamber |
| **C – balance for filters**<br><br>12. Bottom ring<br>10. Weighing pan for filters<br>11. Standard weighing pan | **D – balance for pipettes calibration**<br><br>2. Draft shield<br>3. Weighing pan<br>4. Glass lid for the weighing chamber<br>5. Glass vessel<br>6. Evaporation ring<br>7. Glass lid for the weighing chamber, with an opening<br>8. Additional glass lid |
| **E – balance for filters with automatic weighing chamber**<br><br>2. Draft shield<br>3. Standard weighing pan<br>4. Glass lid for the weighing chamber<br>9. Weighing pan for filters | |

<u>Pipette calibration:</u>
Run the balance, replace the weighing pan with a set of a weighing pan and a glass vessel (5). Wait for a stable indication, next press TARE button.

**XA 5Y.M Microbalances**

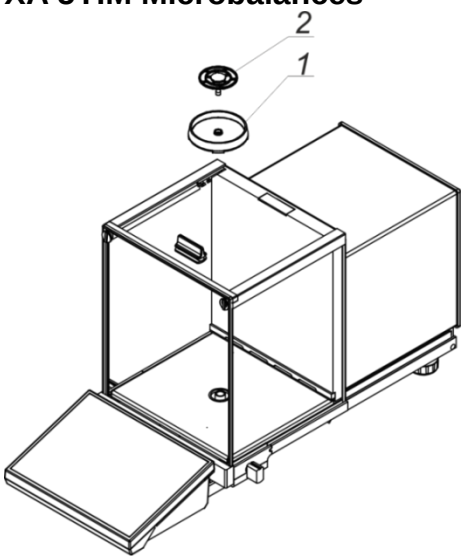


Install:
- draft shield (1)
- weighing pan (2).

## XA 5Y.M.A Microbalances

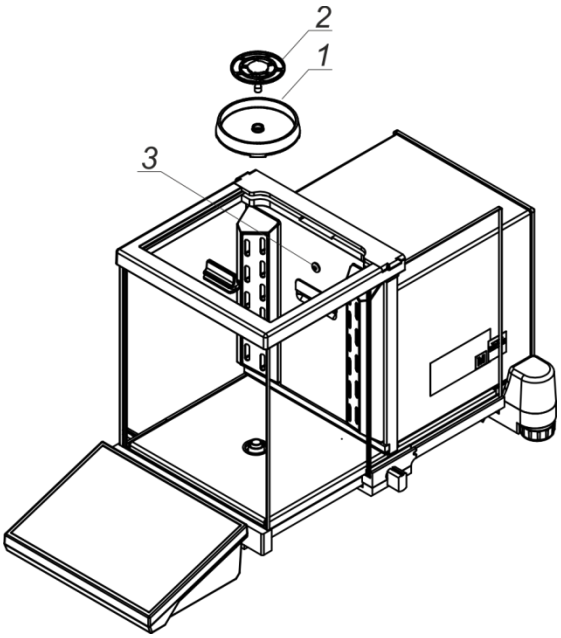


Install:

- draft shield (1),
- weighing pan (2).

3 - diode: ionizer on/off.

## XA 5Y Series Balances

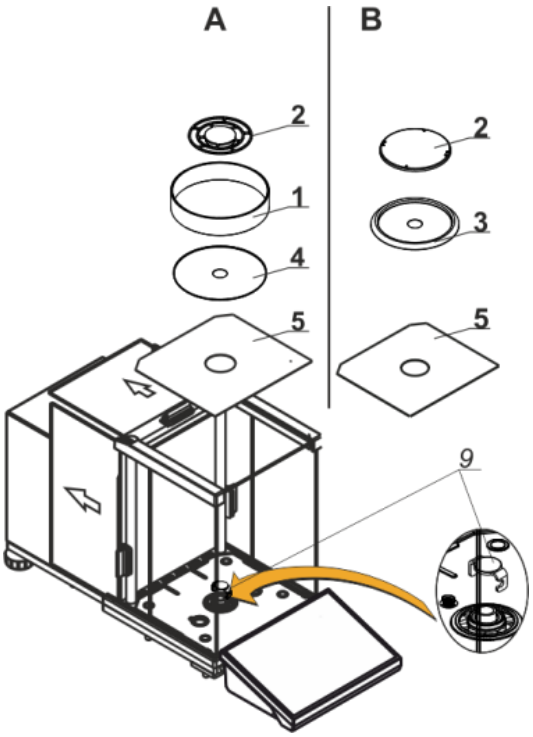


A – balance with d = 0.01 mg
B – balance with d = 0.1 mg

Remove transport lock (9) - press the transport lock down gently, turn it direction pointed by <OPEN> arrow, remove the protection. Keep the transport lock to ensure proper protection of the weighing instrument during transportation.

Install:

- bottom weighing chamber shield (5),
- centring ring {embossing side upwards} (4),
- weighing pan (2).
- draft shield (3) or (1),

<u>Balance for pipettes calibration</u>
Replace the draft shield and the weighing pan with
the chamber for pipette calibration, inside install:
- weighing pan
- other components (see description below)

## XA 5Y.A Series Balances

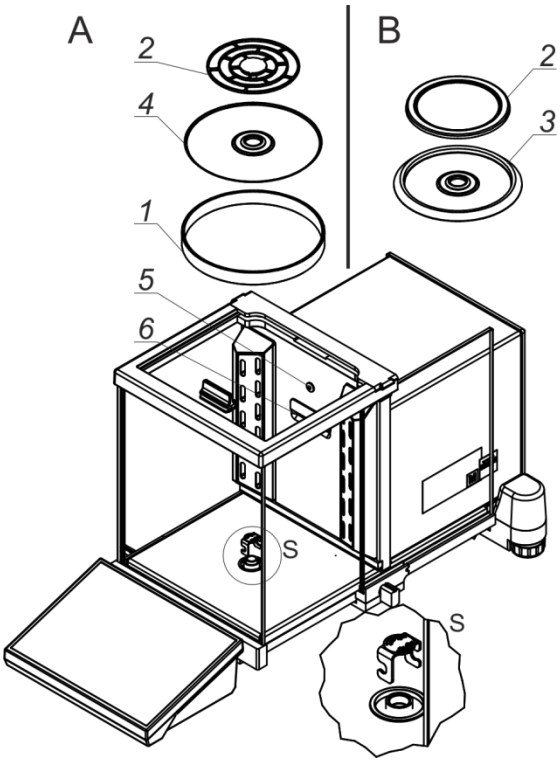


A – balance with d = 0.01 mg
B – balance with d = 0.1 mg

Remove transport lock (9) - press the transport lock down gently, turn it in direction pointed by <OPEN> arrow, remove the protection. Keep the transport lock to ensure proper protection of the weighing instrument during transportation.

Install:
- centring ring {embossing side upwards} (4),
- draft shield (3) or (1),
- weighing pan (2).

5 - diode: ionizer on/off

<u>Balance for pipette calibration</u>
Replace the draft shield and the weighing pan with the chamber for pipette calibration, inside install:
- weighing pan
- other components (see description below)

## XA 5Y.F Series Balances

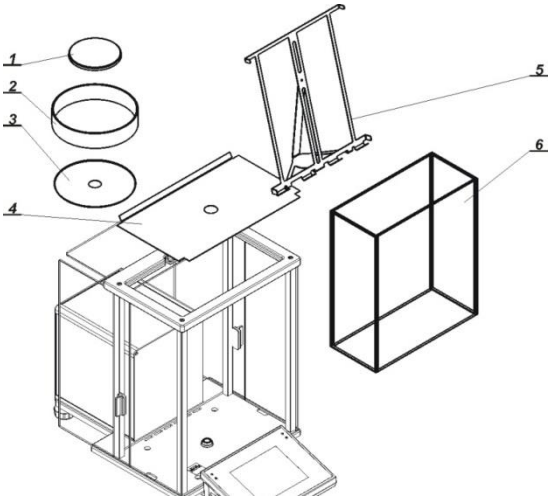


Install all standard components:

- bottom weighing chamber shield (4),
- bottom ring (3),
- standard weighing pan (1),
- draft shield (2).

Install additional accessories. Connect the balance to the mains. To do it, use power supply that comes standard with the balance.

Prior to filters weighing, remove draft shield (2), standard weighing pan (1), and bottom shield (3). Next open the weighing chamber, inside place glass shield (6), install pan-stand (5) intended for filter weighing.

Tare the balance and start filter weighing.

## XA 5Y.M.A.S Series Balances

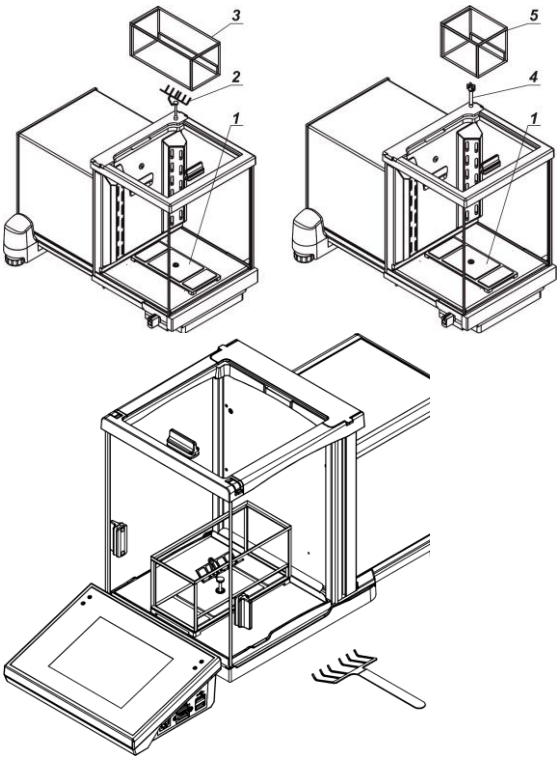


***NOTE: The stent weighing kit is optional and is not included in the standard delivery.***
***To use it during weighing, purchase such a kit at RADWAG's.***

Activate the balance with a standard set of weighing pans (description above).

Before you start weighing stents, disassemble a standard weighing pan and draft shield. Next install the following pieces of the unit inside the weighing chamber:

- draft shield base (1)
- fork-shaped weighing pan for large (2) or small stents (4)
- large (3) or small draft shield (5)

*The description of the kit can be found in a separate manual*: *IMMU-49-01-12-21-EN*

Then tare the balance readout and start weighing stents.

## AS.5Y with d=0,01 mg

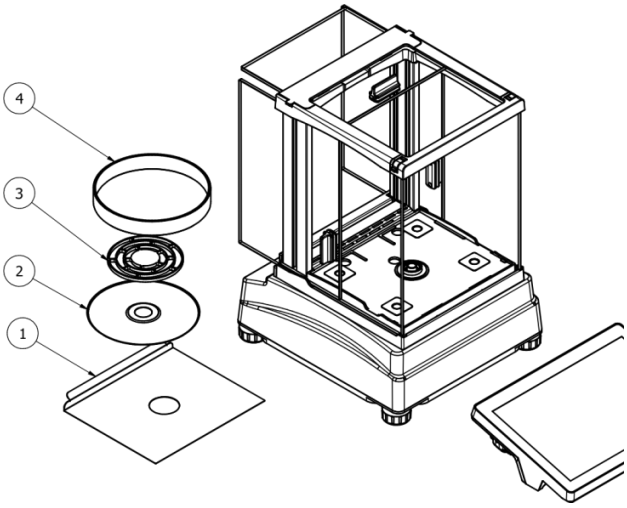


Install all standard components:

- bottom insert (1)
- centring ring (2)
- weighing pan (3)
- draft shield (4)

**AS.5Y with d=0,1 mg**

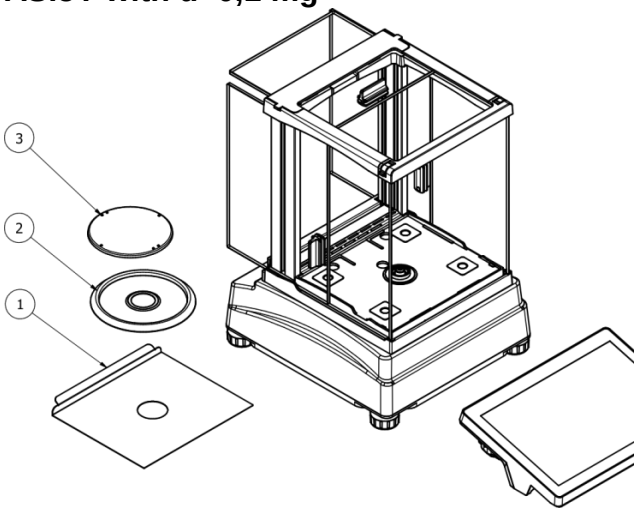


Install all standard components:

- bottom insert (1)
- draft shield (2)
- weighing pan (3)

**PS.5Y with d=0,001 g**

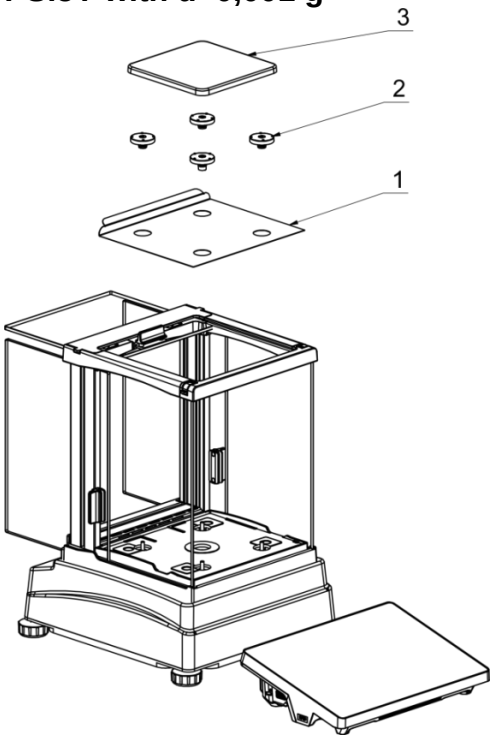


Install all standard components:

- bottom insert (1)
- rubber mandrels (2)
- weighing pan (3)

**PS.5Y with d=0,01 g**

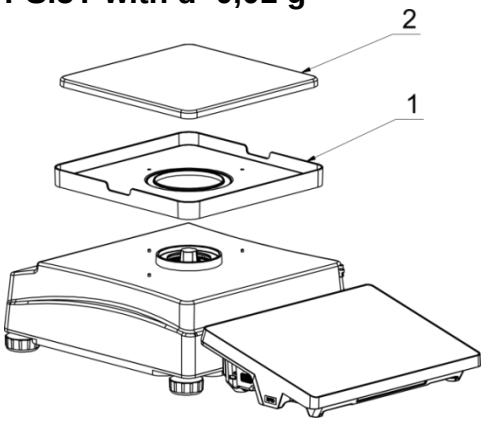


Install all standard components:

- draft shield (1)
- weighing pan (2)

## 5Y.PM Series Balances – maximum capacity to 35 kg

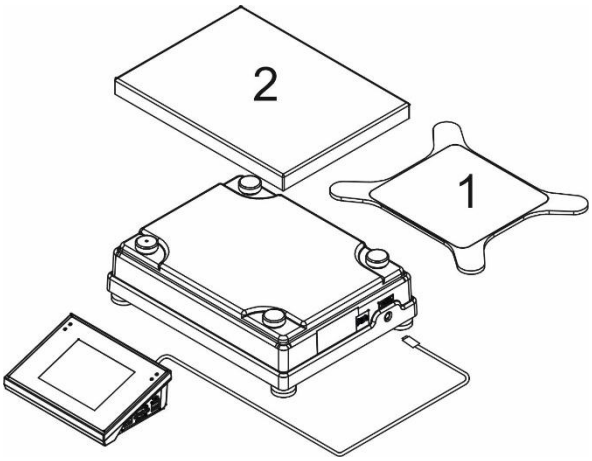


Install the weighing pan 1 for PM with d=0.01g or pan 2 for other PM.

Make sure that the pan is installed properly on the pan receivers: it cannot touch the housing and must be stable.

Connect the indicator first (the connector is to be found at the back of the balance housing), next connect the supplementary equipment.

Now, connect the weighing instrument to the mains (the power supply socket is located on the left side of the indicator).

## 5Y.PM Series Balances – maximum capacity from 60 kg to 120 kg

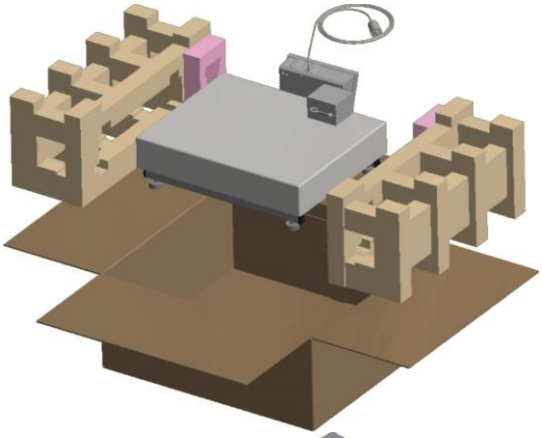

Remove the PM 60/ PM 120 platform / balance from the transport packaging by holding the polyurethane inserts. After removing the platform/balance from the packaging, dispose of the polyurethane inserts.

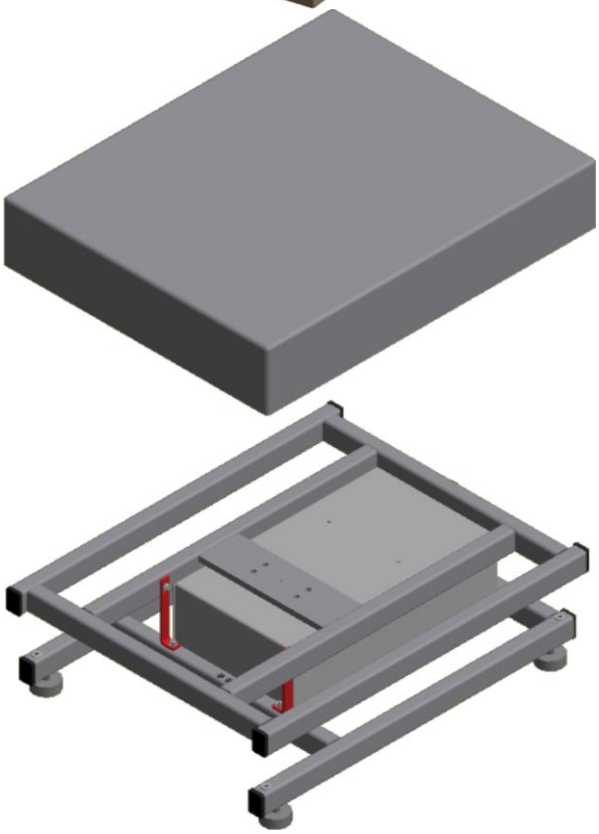

Next, remove the weighing pan. Once removed, you will see 3 red transport locks. When blocked this way, the platform is ready to be **safely moved** to another location without risk of damage.

***NOTE:***
*Moving the balance without the locks screwed in place may damage the platform/balance.*

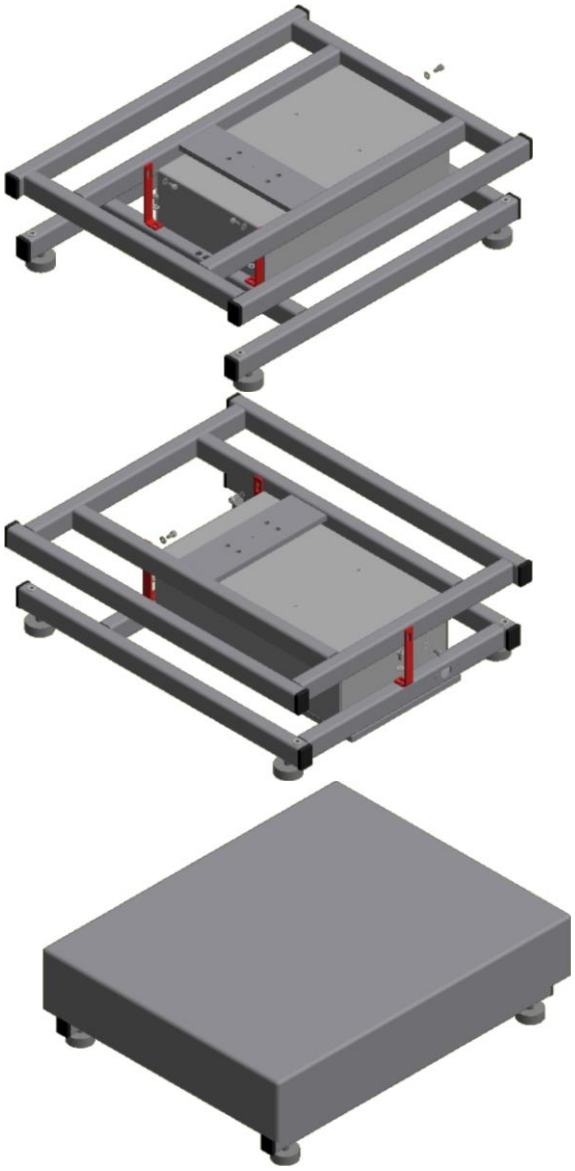

Next, unscrew the transport locks. The exact location of the locks is shown in the drawings opposite.

***NOTE:***
*After removing the safety locks, do not grab the platform/balance by the upper part of the frame (this may cause damage). In this design, it is permissible to lift by the lower part of the frame, into which the feet are screwed.*

After removing the transport locks, place the balance in its intended location, level it by turning or screwing the feet, while observing the level indicator positioned in the middle of the lower frame. After levelling, check that all 4 feet are in contact with the ground.
Place the weighing pan on the platform/balance in this position.
Then connect the indicator to the socket on the side of the weighing platform, connect all additional devices, and finally connect the balance to the mains (the power supply socket is located on the side of the indicator).

## 5Y.HRP Balances

For information on dimensions and installation read a separate manual: 5Y HRP High Resolution Platform; IMMU-31-xx-xx-xx-EN.

***Caution:*** *Be careful while installing the components so as not to cause any damage to the balance mechanism.*

***Caution:***
*When connecting the indicator to the balance, pay special attention to proper insertion of the plug into the socket and its secure fastening in the socket by carefully screwing the securing nut.*

### 3.4. Maintenance Activities

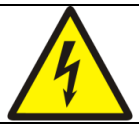

Electric shock.

Some balance models are equipped with an ionizer. Make sure to take special safety measures during maintenance.

1. The balance must be disconnected from the mains before maintenance.
2. Ensure that no liquid comes into contact with the power supply.
3. Never open the balance housing, terminal, ionizer or power supply – they contain no internal components that can be cleaned, repaired or replaced by the user.
4. Do not connect the balance to the mains until the cleaned parts are dry.
5. Any maintenance activities or cleaning must be performed 5 minutes after disconnection of the device from the mains.
6. The emitter pins are sharp. Do not touch them directly as this may cause body injury.

The ionizer covers have to be cleaned at least once a month using a lint-free cloth soaked with alcohol-based substance.

***Caution:***
*Cleaning the weighing pan while still installed may cause damage of the measuring system.*

1. Uninstall the weighing pan and other detachable components (the components differ depending on a balance type – see section: *UNPACKING AND INSTALLATION)*. Be careful while installing the components so as not to cause any damage to the balance mechanism. Remove the weighing pan of a microbalance using tweezers.
2. Using handheld vacuum cleaner remove dust from the weighing chamber (recommended for the microbalance).
3. In order to ease cleaning of some of the weighing instrument components, it is permissible to remove them following the below instruction.

***Cleaning anti-draft chamber panes:***

*Select dissolvent depending on the type of contamination. Never soak the glass panes in alkaline solutions since they interact with glass and may cause damage. Do not use cleansers containing abrasive substances.*

*For organic dirt use acetone first, next use water or detergent. For other than organic dirt use diluted acid solutions (soluble salts of hydrochloric or nitric acid) or base solutions (ammonium or sodium base).*

*To remove ACIDS use protophilic solvent (sodium carbonate), to remove BASE use protogenic solvent (mineral acid of various concentration).*

*In case of heavy contamination, use brush and detergent, nevertheless avoid detergents containing large and hard molecules which could potentially scratch glass panes.*

*At the end of the cleaning process rinse the pane using distilled water.*

*Use soft brush with wooden or plastic handle exclusively to avoid risk of scratches. Do not use wire brush.*

*Rinsing is a necessary cleaning process stage allowing to remove remaining soap, detergents and other cleansers from the panes prior to their reinstallation.*

*After the preliminary cleaning process stage, rinse the pane using running water first, distilled next.*

*Avoid drying the panes either using paper towel or forced air circulation since some fibres, grains or contamination of other type could permeate into the panes thus causing weighing errors.*

*We do not recommend using driers when drying measuring glass tools.*
*It is a frequent treatment to leave glass components on a rack to dry.*

***Cleaning powder-coated components:***

*For preliminary cleaning process stage you need running water or wet sponge with large pores, this will help you to remove loose, heavy dirt.*

*Do not use cleansers containing abrasive substances.*

*Next, using cloth and cleanser-water solution (soap, dishwashing liquid) gently rub the surface.*

*Avoid using cleanser without water since it may result in damage of the cleaned surface, please mind that large amount of water mixed with cleanser is a must.*

***Cleaning aluminium components:***

*While cleaning aluminium components use products acid by nature, e.g. spirit vinegar, lemon. Do not use cleansers containing abrasive substances. Avoid using hard brush, this may cause scratches. It is recommended to use microfibre cloth.*
*While polishing the surface use circular movements. Use clean, dry cloth to make the surface shine.*

***Cleaning stainless steel components***

When cleaning stainless steel components, the following table should be followed, which lists the types of contamination and ways of removing it.

| | |
|---|---|
| Fingerprints | Clean with alcohol or dilutant.<br>Rinse with clean water and wipe dry. |
| Oils, fats, greases | Wash with organic solvents and then clean with warm water with soap or mild detergent.<br>Rinse with clean water and wipe dry. |
| Temperature stains and discolorations | Wash with a gentle abrasive cleaner, clean lightly according to the direction of the surface structure.<br>Rinse with clean water and wipe dry. |

| | |
|---|---|
| Strong discoloration | Clean lightly according to the direction of the surface structure. Rinse with clean water and wipe dry. |
| Traces of rust | Moisten with oxalic acid solution and leave for about 15-20 minutes, then wash with warm water with soap or mild detergent. Rinse with clean water and wipe dry. |
| Paints | Wash with paint solvent and then rinse with warm water with soap or mild detergent.<br>Rinse with clean water and wipe dry. |
| Scratches on the surface | Gently polish the surface with a non-woven fabric (iron-free) according to the direction of the surface structure. Wash with a gentle abrasive cleaner. Rinse with clean water and wipe dry. |

## ***Cleaning ABS components***

*To clean dry surfaces and avoid smudging, use clean non-colouring cloths made of cellulose or cotton. You can use a solution of water and detergent (soap, dishwashing detergent, glass cleaner). Gently rub the cleaned surface and let it dry. Repeat the cleaning process if necessary.*

*In the case of hard to remove contamination, e.g. residues of adhesive, rubber, resin, polyurethane foam etc., you can use a special cleaning agents based on a mixture of aliphatic hydrocarbons that do not dissolve plastics. Before using the cleanser for all surfaces, we recommend carrying out tests. Do not use cleansers containing abrasive substances.*

Disassembly steps:

| **MYA Series Balance** | |
|---|---|
| 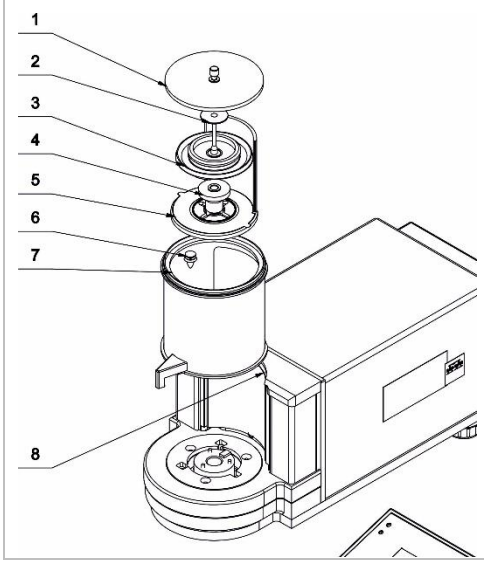 | ▪ Open the chamber.<br>• Carefully remove weighing pan (2).<br>▪ Remove draft shield (3).<br>• Undo draft shield sleeve (4).<br>• Remove internal ring assembly (5).<br>• Remove snap-in holder (6), lever it using e.g. tweezers.<br>• Close the chamber, press clamp (8) down and move ring assembly (7) to the front and up. |

Disassembly steps:

| **MYA F balances** | |
|---|---|

| | |
|---|---|
| 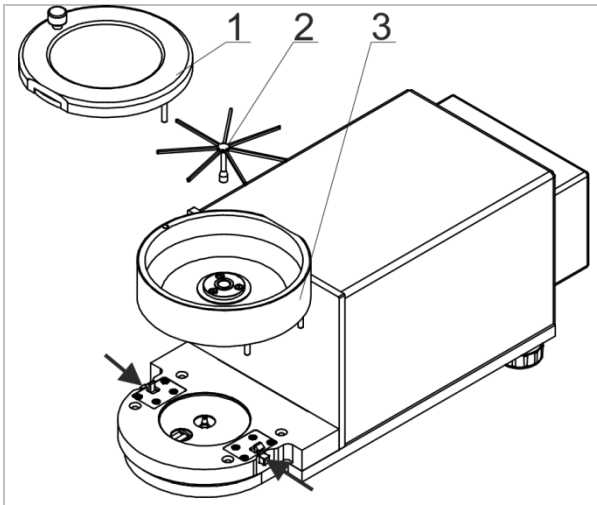 | • Open and remove chamber lid (1).<br>▪ Remove weighing pan (2).<br>• Press the buttons marked with arrows to release chamber for filter weighing (3) and remove it.<br><br>***Caution:*** *Pay special attention while assembling the chamber. Guide the pins so that they are evenly inserted into the base openings (inaccurate inserting of the pins will cause incorrect assembly and may cause balance damage).* |

Disassembly steps for XA 5Y.A:

| | |
|---|---|
| 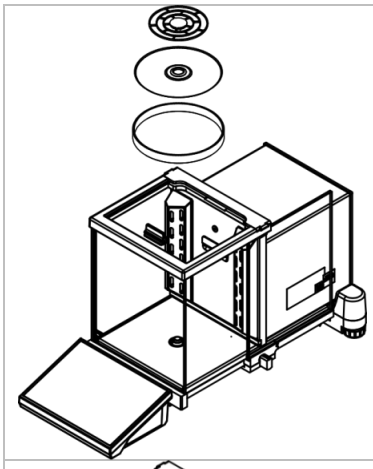 | Remove the weighing pan and the draft shield. Clean the components when detached. With this, your balance mechanism is protected against accidental damage. |
| 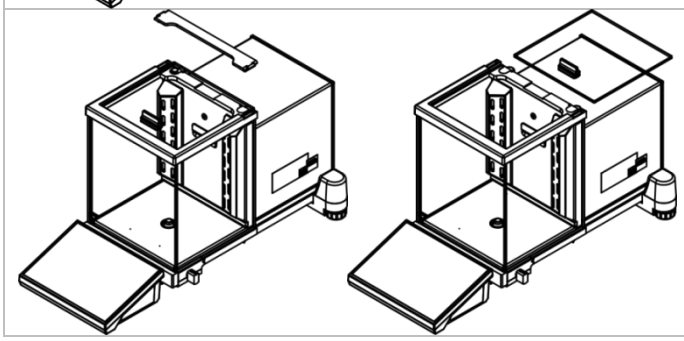 | Undo and remove the top pane protection, next slide the pane out of a guide bar. |

| | |
|---|---|
| 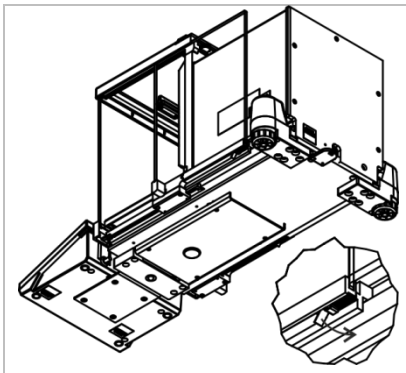 | Remove the left and the right side pane. Before removing the panes completely, pull away the protection, see the picture on the left. The side panes are not interchangeable, therefore, remember which is left and which is right. Upon cleaning procedure completion, the panes must be installed on the correct sides. |
| 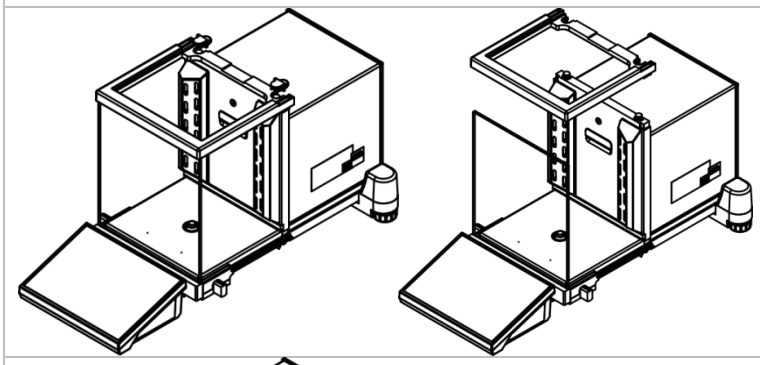 | Undo and remove the top frame protection, next disassembly the top frame. |
| 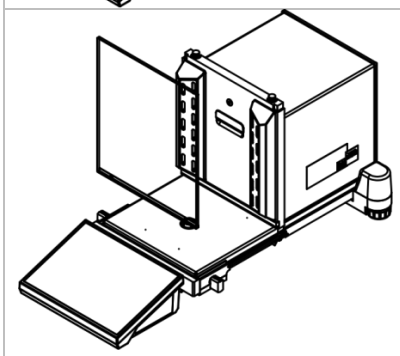 | Remove the front pane. |

Disassembly steps for XA 5Y:

| | |
|---|---|
| 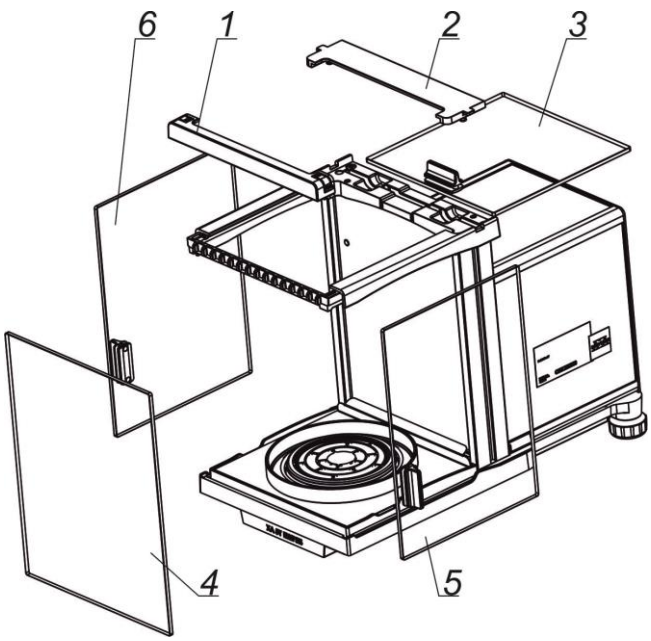 | Remove the weighing pan and the draft shield. Clean the components when detached. With this, your balance mechanism is protected against accidental damage.<br><br>Next:<br><br>1. Undo the frames (1) and (2).<br>2. Slide the top pane (3).<br>3. Remove the front pane (4).<br>4. Slide side panes (5) and (6) forward. |

Clean the weighing chamber and the panes. All the operations have to be done carefully. Pay special attention to the spot where the weighing pan is installed; dirt and other small elements may enter the balance construction through this opening. This may cause incorrect operation of the instrument. Upon maintenance is completed, carry out the same set of actions in a reverse order. Pay special attention to the left and right side panes, assembly them on the correct side of the balance. While sliding the pane back onto its place, remember to pull away the protection (like before, when disassembling the anti-draft chamber).

### 3.5. Connecting the Balance to the Mains

The weighing device can be connected to the mains only with a power supply that comes standard with the particular model. Nominal voltage of the power supply (specified on the power supply data plate) has to be compatible with the mains nominal voltage.
Plug the balance to the mains – connect the power adapter to the socket, next connect its connector to the interface located at the back of the balance housing.

### 3.6. Temperature Stabilization Time

Prior to the measuring processes start, it is necessary to wait until the balance reaches thermal stabilisation. Balances stored in much lower temperatures, than the workroom temperature, before being plugged to the mains must be subjected to thermal stabilisation. The thermal stabilisation period takes about 12 hours. During the thermal stabilization, the indications on the screen can change. Potential workroom temperature change shall be insignificant and occur slowly. **Thermal stabilization also applies to the monitoring system and automatic balance levelling.**

### 3.7. Connecting Peripheral Equipment

Use only accessories and peripheral equipment recommended by the manufacturer. The balance must be unplugged from the mains before connecting or disconnecting any peripheral equipment (printer, PC, computer keyboard of USB type or extra display). Upon connecting the peripherals, plug the balance to the mains.

### 3.8. Balances with Integrated Ionizer

Safety notes contain important information on safety issues. Ignoring the safety notes may lead to personal injury, damage to the instrument or breakdown.

Safety notes are marked with the following signal words and warning symbols:

| | |
|---|---|
| | Do not touch ions source. This may cause electric shock (during operation) or injury (components generating ions are sharp). |
| | Should you notice any signs of incorrect operation (smoke, burnt material smell, irregular ionizer warming), disconnect the device from the power supply immediately. Should water or any foreign bodies get inside the ionizer, behave likewise, i.e. disconnect the ionizer from the mains immediately. |

| | |
|---|---|
| | Due to high voltage, typical for the ionizer, remain extremely careful while operating it. |
| NIE OTWIERAĆ | It is not allowed to either disassemble or modify the ionizer. Use the device only as intended. |

The antistatic ionizer, a built-in component of the **XA 5Y.M.A** microbalance and the **XA 5Y.A** balance, neutralizes electric charges inside the weighing chamber upon placing the sample in it. The lower the value of relative humidity and a reading unit of the balance, the more evident influence of static electricity.
The ionizer neutralises any uncompensated electric charge accumulated on the weighed object. Affected operation results in greater repeatability error, often also greater error of indication.
Measurement errors, due to the harmful effects of electrostatics, often reach the value of thousands of reading units and more. The problem concerns non-conductive samples, e.g. glass flasks, paper filters, plastics, etc.
Implemented in the XA 5Y.M.A microbalance, the antistatic ionizer is a modern technology solution which compensates both cations and anions. The ionizer activates when the balance door opens, and deactivates when the door is closed.

It is possible to control the ionizer using quick access button.

| | |
|---|---|
| START STOP | Press to start/stop ionizer operation. |
| START | Press to activate. |
| STOP | Press to deactivate. |

The operation is signalled by blue LED diode (installed at the back of the weighing chamber) which emits light when the ionizer is on.

## 4. START-UP

- Power the balance.

  ***Caution:*** *There are two sockets on the balance for connecting to the power supply. The indicator has one socket, and the weighing mechanism housing has the other. The balance can be powered from both the indicator and the weighing mechanism, but not simultaneously from both sides, using two power supplies. Such a connection may result in damage to the balance and power supplies.*

- After a while, the procedure of loading the operating system with RADWAG software gets started. During start-up, the signalling diodes and LEDs at the front of the indicator start blinking.
- Upon balance start-up, the home screen is displayed, levelling process runs automatically. During the automatic levelling, the feet engines operation is heard. Respective messages are displayed.

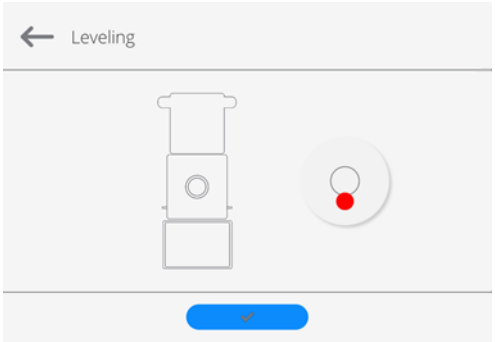


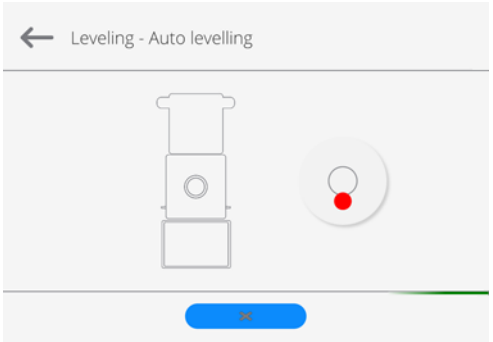


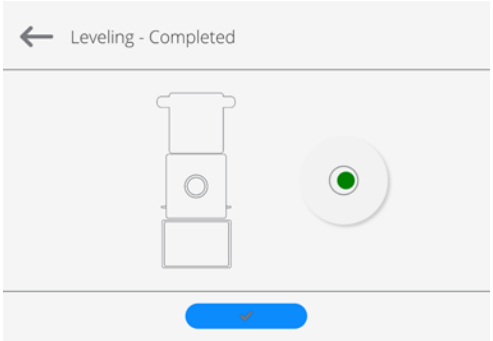


Levelling range is limited. In the case of too great tilt of the surface (counter, table top) where the balance rests, the levelling gets aborted and the following message is displayed: <***Balance out of levelling range***>.

Shall the surface tilt be too great, first level the surface, next carry out the balance levelling (for levelling procedure details, read further down this manual).

- Upon completed start-up of the remaining balance series, the home screen is displayed automatically.
- The balance runs with no user logged in. In order to start operation, it is necessary to log in (for detailed login procedure, read later sections of this user manual).

***Caution:*** *Prior to the balance start, make sure that there is no load on the weighing pan. In accordance with the EN 45501 standard, verified balances cannot display mass value below -20e. If the indication value is below -20e, <Lo mass> information is displayed. Press* key to zero the balance***.***

| | |
|---|---|
| *If the software crashes during operation, carry out a hard reset. To do this, press and hold for about 5s the button on the indicator. The software will reset and restart.* | 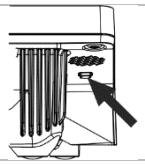 |

### 4.1. How to properly turn off the scale's power supply

**Procedure:**

1. Expand the top scale menu

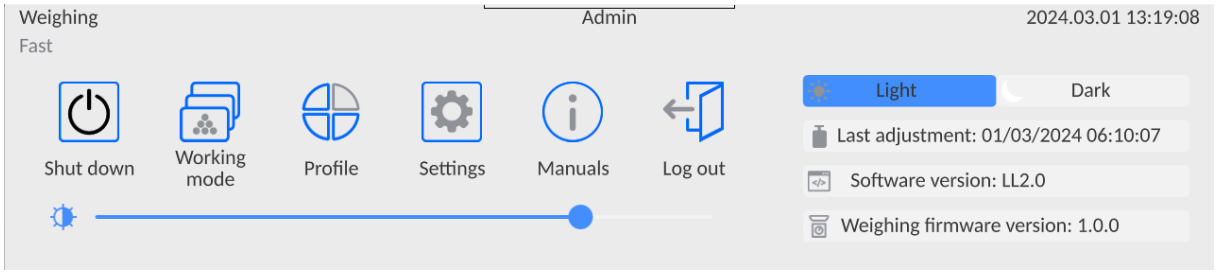


2. Press the <Off> button

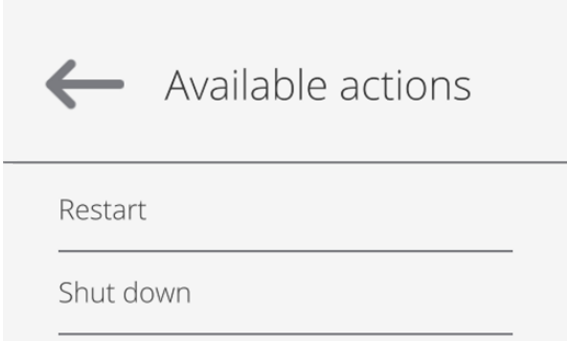


3. Select <Off>, the message below will be displayed.

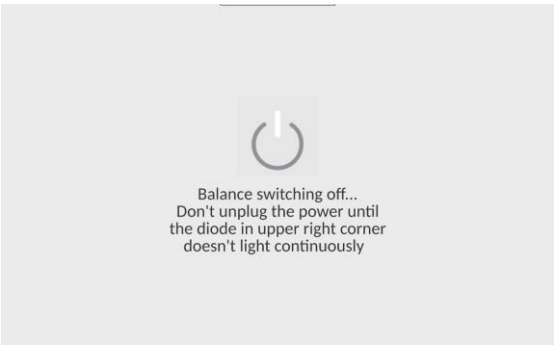


4. After closing the program, the LED in the upper right corner of the display will light up continuously.
5. Only then can you disconnect the power supply plug from the read head socket.

## 5. PROGRAM STRUCTURE

Program menu is divided into function groups. A function group is a group of interrelated parameters. For detailed description of each group, read later sections of this service manual.

**Function groups:**

The main menu is accessed by pressing button located in the bottom part of the display.

The menu comprises parameters related to balance settings, functions and profiles.

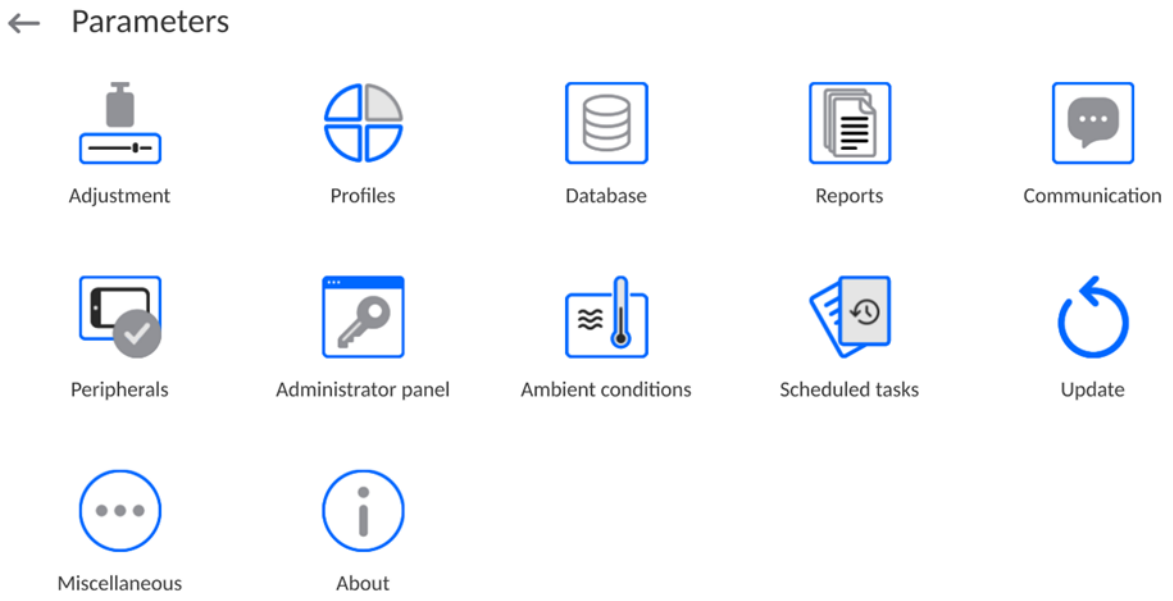


## 6. WEIGHING RESULT WINDOW

**The home screen features 5 sections:**

- Top section displaying data on active working mode, logged-in user, date, time, computer connection status.

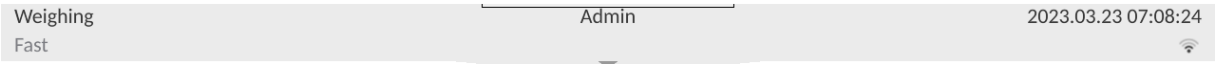


- Section presenting the weighing result and a current level status.

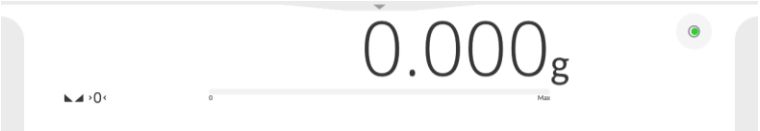

- Section comprising supplementary information on currently performed operations (grey background).

***Caution:***
*Data contained in this workspace is freely configurable. For detailed information, read section 12.4 of this user manual.*

- Section comprising on-screen function buttons:

***Caution:***
*The operator can define the on-screen function buttons. For detailed information, read section 12.3 of this user manual.*

- Section comprising on-screen function buttons:

## 7. LOG IN

In order to access operator-related parameters and edit databases, you need to log in as an operator with **<Administrator>** permission level.
To do this, pull down the menu at the top of the display.

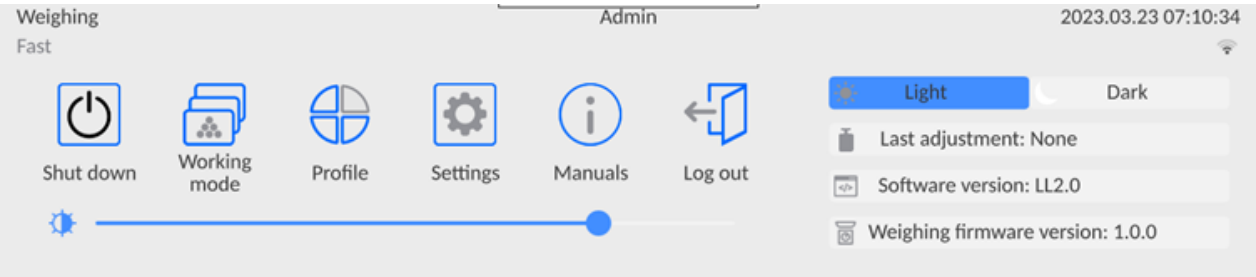


**First Log in:**

- Pull down the top menu, press **<Log in>** field, operators database window is opened featuring **<Admin>** entry.

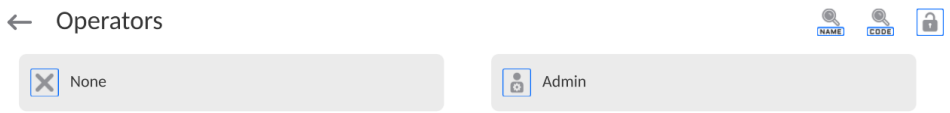


- The home screen is displayed, **<Not logged in>** sign is replaced by **<Admin>** sign.

***Caution: After first logging in, enter operators and assign appropriate permission levels and individual access passwords to them (for detailed procedure, read sections 10 and 28.2). While logging in again, select an operator from the list and enter the password, the program initiates operation with permission level set for the selected operator.***

**Log out operation:**

- Pull down the menu at the top of the display.
- Press **<** **>** field.
- The home screen is displayed, logged in operator name is replaced with **<Not logged in>** entry.

## 8. OPERATING THE MENU

Operation of the program menu is intuitive. The touch panel makes the software operation easy. Pressing a function button or an area on the display initiates an assigned function or a process.

## 8.1. Operation Panel

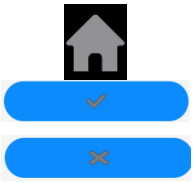

Press to enter the main menu.

Press to confirm modification.
Press to return to the previous view without changing the parameter value.

Press to add a database record.

Press to search for a particular database entry by date.

Press to search for a particular database entry by name.

Press to search for a particular database entry by code.

Press to print database entries.

Press to select printout template variables from the list.

Press to go back.

## 8.2. Voice Commands

The balance software allows several operations to be performed using voice commands. These are: tare, zero, print/save measurement. The commands must be spoken in English, in the correct sequence. Below is the structure of the individual commands.

Tare: **ellipsis [please] (tare | tar | terre) [the] device**

Zero: **ellipsis [please] zero [the] device**

Print/Save: **ellipsis [please] save [the] (mass | measurement | mass measurement)**

Open automatic door: **ellipsis open door**

Close automatic door: **ellipsis close door**

How to say the command: black text is mandatory, green - may or may not be spoken, red - one of the texts is mandatory to be spoken *e.g: for Print command:* ***ellipsis save mass.***

**Procedure:**

1. Place the <> button for activating voice commands on the button bar (for how to add buttons, read further down this manual).

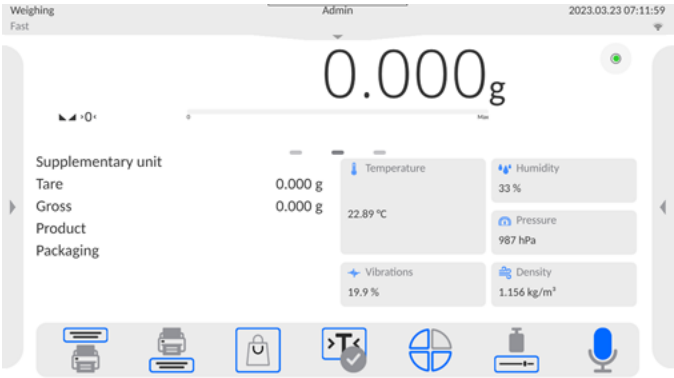


2. Press <>.
3. The voice command recognition procedure is initiated and the user is informed about it through the displayed messages.

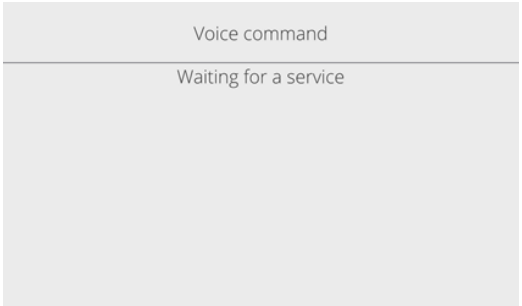


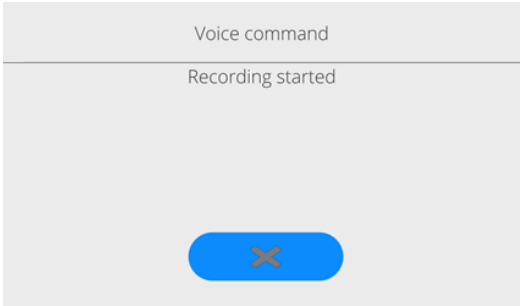


4. Say the command as described above.
5. If the command is spoken correctly and the balance program recognizes the command, a message is displayed and the command is automatically executed.

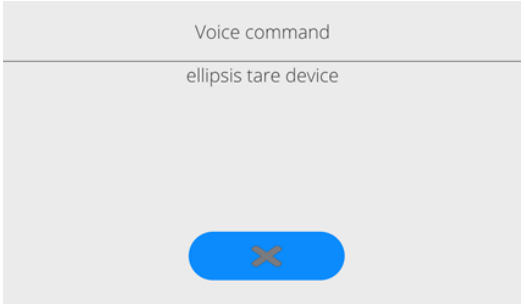

### 8.3. Return to Weighing

Modifications introduced into balance memory are automatically saved upon return to weighing operation.

**Procedure:**

- Press ← button repeatedly, keep pressing it until you see the home screen.
- Press button (top bar), the home screen is displayed immediately.

## 9. ADJUSTMENT

The 5Y series balances feature automatic internal adjustment system which ensures correct measurement accuracy. <ADJUSTMENT> menu contains functions controlling operation of module adjustment process.

### 9.1. Internal Adjustment

Internal adjustment is carried out by means of an internal adjustment weight. <Internal adjustment> button, when pressed, automatically triggers adjustment process. Upon adjustment process completion, a respective message, informing about process end and its status, is displayed.
Each time before the internal adjustment, the balance level is checked. When the balance is not levelled, the internal adjustment takes place only upon prior levelling.

***Caution:*** *Balance adjustment procedure requires stable conditions (no air drafts, no vibrations). In the course of adjustment the weighing pan must be unloaded.*

### 9.2. External Adjustment

External adjustment is carried out using external mass standards of the right accuracy and weight value, which value depends on balance model and capacity. The process is carried out semi-automatically, successive process stages are signalled with prompts.

***Caution:*** *External adjustment is possible for balances that are not subject to the conformity assessment (verification).*

**Procedure:**

- Enter <Adjustment> submenu, next select <External adjustment> option.
- Message to remove weight is displayed. Unload the weighing pan and press button. The balance determines start mass, message: **Start mass determination** is displayed.
- Upon completed start mass determination, message ordering you to load the weighing pan is displayed. Load the weighing pan with weight of respective mass value, and press button.
- For some balance types, the next message is displayed. Load the weighing pan with weight of subsequent mass value, and press button.
- Upon completed procedure, unload the weighing pan and press button to confirm. Balance returns to the weighing process.

### 9.3. Adjustment Test

<Adjustment test> function enables comparing the result of an internal automatic adjustment with the value recorded in balance factory parameters. The comparison is used for determining drift of balance sensitivity over time.

### 9.4. Automatic Adjustment

Enter this menu to specify conditions initiating an automatic adjustment. Options:

- None – automatic adjustment inactive.
- Time – adjustment takes place in time intervals declared in <Automatic adjustment time> menu
- Temperature – adjustment is triggered by temperature change.

- Both – adjustment is triggered by both, temperature changes and time.

***Caution:*** *This parameter's settings can be modified only for balances that are not subject to the conformity assessment (verification).*

### 9.5. Automatic Adjustment Time

<Automatic adjustment time> parameter determines time interval between successive automatic internal adjustments. The time interval is declared in hours and ranges between 1 and 12 hours.

To set time interval for automatic adjustment:

- enter <Automatic adjustment time> parameter,
- using the displayed menu, select the appropriate time interval (given in hours), which is to elapse between the most recent adjustment and activation of the following automatic internal adjustment.

***Caution:*** *This parameter's settings can be modified only for balances that are not subject to the conformity assessment (verification).*

### 9.6. Report Printout

<Report printout> parameter determines whether or not an adjustment report is to be automatically printed upon adjustment process completion.
To print the report automatically, set the parameter as active.

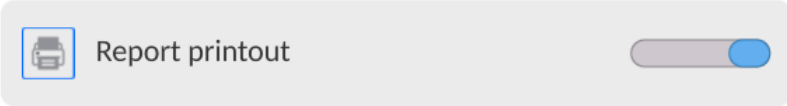


### 9.7. GLP Project

GLP is one of many methods for documenting work in accordance with adopted quality system. Data selected for printing is printed on each release of an adjustment report.

Information and signs to be used in a GLP report:

| | |
|---|---|
| adjustment (adjustment type) | working mode (working mode name) |
| date | time |
| balance type | balance S/N |
| operator | first and last name |
| level status | nominal mass |

| | |
|---|---|
| current mass | difference |
| nominal mass 2 | current mass 2 |
| difference 2 | temperature |
| dashes | empty line |
| signature | non-standard printout |

### 9.8. Adjustment History

Adjustment history contains data on all carried out adjustment processes. The record is carried out automatically. Each adjustment record comprises basic data on completed process. This menu enables displaying the list of completed adjustment processes. Each report is printable.
In order to print an adjustment report, enter <Adjustment> submenu, next enter <Adjustment history> parameter, select adjustment to be printed. Record details are displayed, press <> print button.

***Caution:*** *If the balance memory is full, then the oldest record gets automatically deleted.*

If internal procedures of an organization require maintaining complete documentation concerning all carried out adjustment processes, then the list with adjustment records has to be printed and archived periodically.

**Searching for adjustment record**

It is possible to search for a specific completed adjustment record. To do that, press <DATE> button and enter date of an adjustment process that is to be found.

**Exporting data on completed adjustment process**

Connect a USB flash drive to the balance USB port. Press <> button located in the upper right corner of the display. The process is fully automatic and on its completion a file with ***.db.*** extension is saved to a USB flash drive connected to the USB port.

## 10. ADMINISTRATOR PANEL

This menu enables to determine: activities to be carried out by an operator with certain permissions, password strength and permissions for unlogged operator.

***Caution: Only operator with Administrator permissions can modify permission-related parameters.***

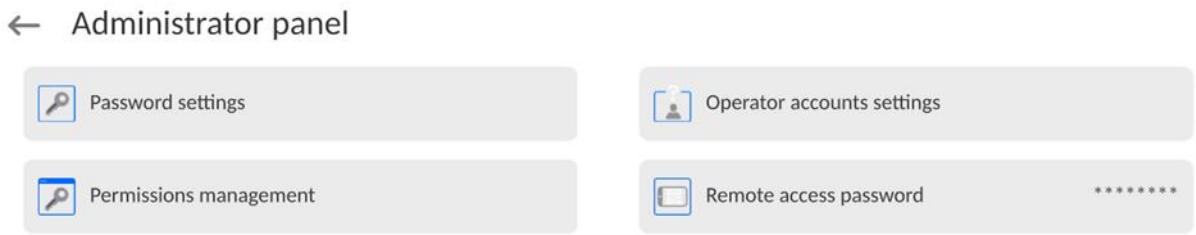


## 10.1. Password Settings

This submenu is designed to set password sophistication rate.

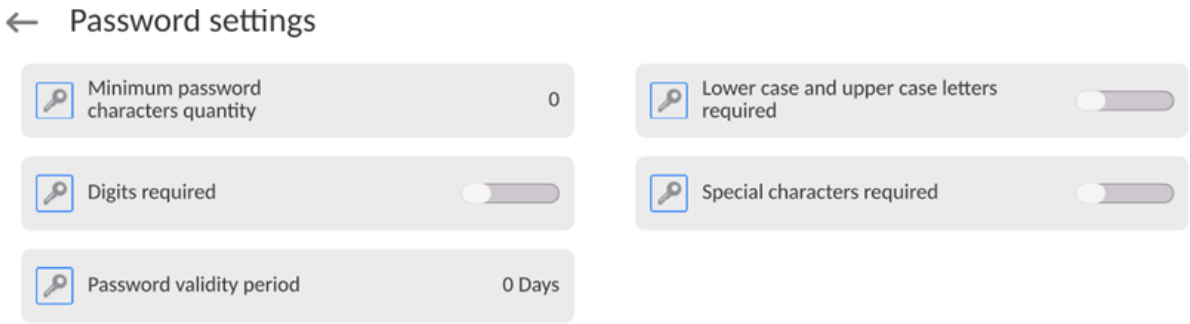


| | |
|---|---|
| Minimum password characters quantity | Determining quantity of characters in operator's password.<br>For '0' value set any quantity of characters. |
| Lower case and upper case letters required | Parameters specifying requirements regarding password characters type and format. |
| Digits required | |
| Special characters required | |
| Password validity period | Determining time interval in days after which the password has to be changed.<br>For '0' entry password change is not required. |

## 10.2. Operator Accounts Settings

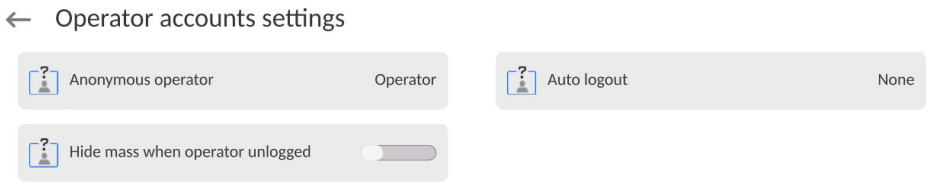

### Unlogged operator permissions

Administrator can assign an unlogged balance operator (so called anonymous operator) with permissions level.

**Procedure:**
Enter <Operator accounts settings> submenu, select <Anonymous operator> option, next set respective permissions: Guest, Operator, Advanced operator, Administrator.

***Caution:*** *Operator assigned with* ***<Guest>*** *permissions level is not allowed to modify program settings.*

### Auto logout

With Auto logout function on, the operator is logged out automatically if the balance is not operated within a specified time interval, given in minutes.
By default, the function is disabled (<None> entry set).

**Procedure:**
Enter <Operator accounts settings> submenu, select <Auto logout> parameter, next set respective value: none/3/5/15/30/60. Time given in [min].

### Hide mass when operator unlogged

Option to disable the mass result display if the operator is not logged in. By default, the function is disabled.

**Procedure:**
Enter <Hide mass when operator unlogged> option and set it to active.

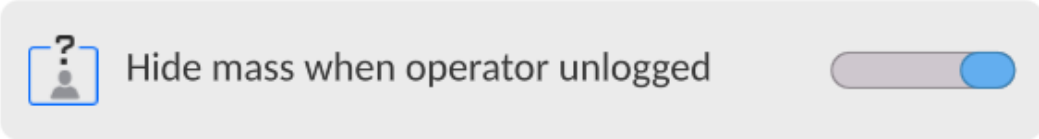

## 10.3. Permissions Management

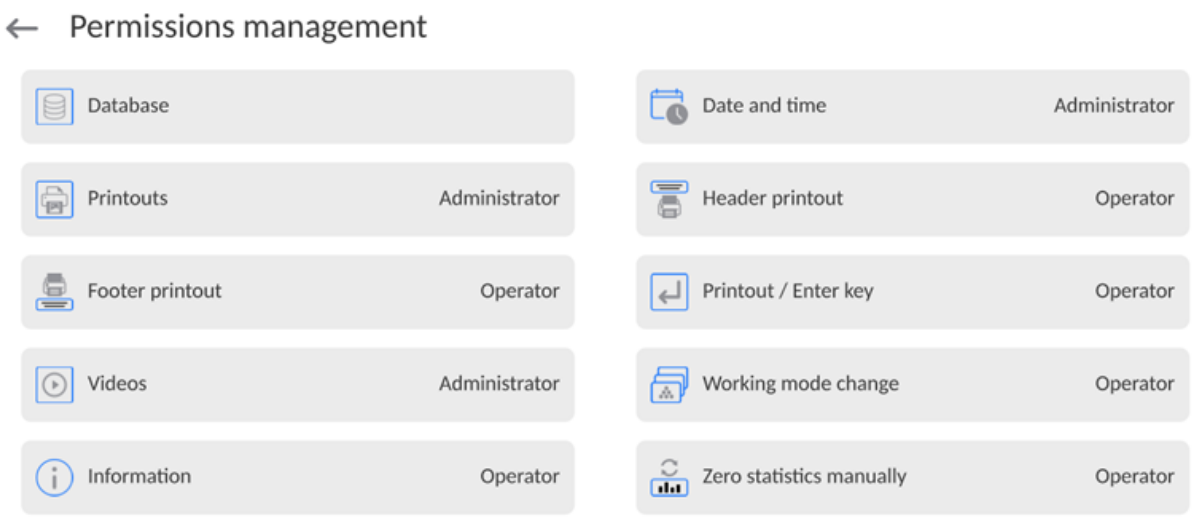


***Caution:*** *When the* ***<Guest>*** *option is set for individual parameters, their settings can be freely accessed (there is no need to log in).*

Each option can be assigned with a permissions level to edit it.
Parameter values:

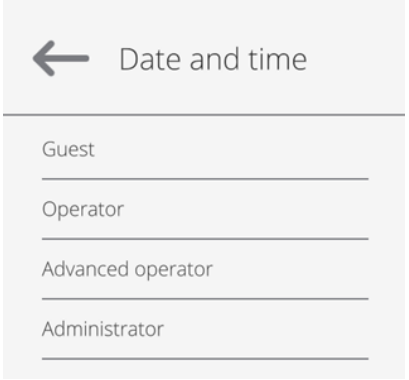


### Databases

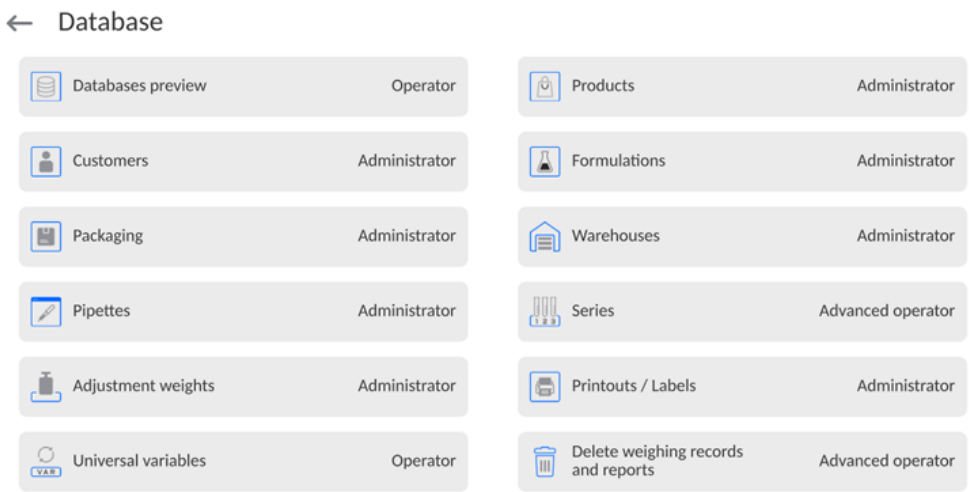

Default balance settings enable an operator who is logged as **Administrator** to modify settings of particular databases. The values can be changed depending on the needs.

The editing permissions for the other options available in this menu can be changed on a similar basis.

### 10.4. Remote access password

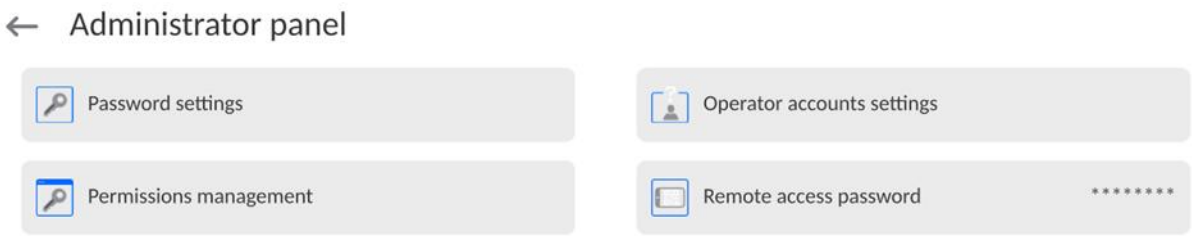


The balance allows you to gain remote access, using connection between the balance and local Internet network that a PC is connected to. The **VNC Viewer** application can be used for this purpose.
A default access password in the program is a sequence of the following characters: **radwag1234.** If the operator does not wish to use the default password, he must enter its own unique access password in the relevant field.

*Note: please remember a new password in order not to lose a remote access to the balance.*

## 11. PROFILES

A profile is a data pack that determines:

- particular function operation, e.g. 'Parts counting', 'Percent weighing', etc.,
- data to be displayed during operation,
- function keys to be active,
- measuring units to be accessible,
- criteria determining speed of operation and measurement stability,

Balance software allows you to create numerous profiles, this enables:

- designing an individual working environment by each operator,
- customized balance operation, i.e. activating selected function keys and information (improved operation performance).

For ease of operation, 4 default balance profiles have been designed. The profiles settings provide optimal weighing process for particular requirements and conditions.

Profile types:

- **Fast** – profile set to enable fast measurement of mass of any size regardless of the selected working mode. Fast profile gets activated automatically at the first balance start-up. For Fast profile, the parameters settings enable obtaining the final result as fast as possible.

- **Fast dosing** – profile intended for dosing, it is set to enable fast dispensing of product. For this profile selected, the DOSING mode gets activated automatically.
- **Precision** – profile set to enable precise measurement of mass of any size regardless of the selected working mode. For this profile the weighing process takes a lot of time, but this guarantees the most precise weighing result.
- **User** – basic profile, filters settings provide quite fast and precise measurement. For this profile selected, the WEIGHING mode gets activated automatically.

***Caution:*** *As an operator, you can modify all profile settings only for User profile.When it comes to the remaining default profiles (Fast, Fast dosing and Precision), they can only be modified partially. Each additional profile you created can be modified in terms of all settings.*

## 11.1. Creating a Profile

The Administrator can create new profiles by:

- Copying an already existing profile and modifying it,
- Creating a new profile.

### Copying an existing profile

**Procedure:**

- Enter the main menu, to do it press button.
- Enter <> submenu.
- Press and hold the profile that is to be copied.
- Menu referring to the profile record is displayed. Select <Copy> parameter.
- A new <*Name* copy> profile is created, new profile settings and base profile settings are identical.
- Modify necessary data: (name, etc.).

### Adding a new profile

**Procedure:**

- Enter the main menu, to do it press button.
- Enter <> submenu.
- Press button.
- A new profile is added automatically, it is opened in an editing mode.

**Deleting a profile**

**Procedure:**

- Enter the main menu, to do it press button.
- Enter <> submenu.
- Press and hold the profile that is to be deleted.
- Menu referring to a profile record is displayed. Select <Delete> parameter.
- Message box: <Delete?> is displayed.
- Press button to confirm, the profile gets deleted.

***Caution:*** *In order to operate profiles, it is necessary to log in as an Administrator.*

## 11.2. Profile Structure

Profile parameters list:

**Settings** Enter this menu to set an individual profile name (an order of alphanumeric characters), and to declare a default working mode (the selected mode is activated as default upon selecting the profile).

**Working modes** Option to set specific functions for individual working modes. Mode submenus:

- Mode related settings
- Buttons
- Information
- Printouts

**Readout** Readout submenus:

- Filter
- Value release
- Autozero
- Autozero: Dosing
- Last digit
- Last digits quantity
- Ambient conditions

**Units** Enter this menu to declare the start unit, the supplementary unit, 2 custom units, to enter the value of gravitational acceleration force in balance's operation place and to declare availability of individual units.

### 11.2.1. Settings

**Name**

Upon entering this parameter, a message box with an on-screen keyboard is displayed. Enter the name of a profile and press button to confirm. The name is assigned to the profile.

**Default working mode**
Upon entering this parameter, you can select a specific working mode that is to be set as default. For <None> value set, upon selecting the profile, the balance activates the most recently used working mode.

### 11.2.2. Working Modes

Upon entering Working Modes parameter, a window containing all accessible working modes is displayed. Parameters are set for each working mode independently. Particular profile when activated runs with a given set of parameters.

List of parameters common for each working mode:

- Settings:
  specific parameters relating to a working mode, and universal settings such as: result control, tare mode, automatic footer printout, printout mode, printout.
- Functions of quick access buttons:
  declaring quick access buttons to be displayed.
- Information:
  declaring information to be displayed.
- Printouts:
  declaring type of a printout or defining a non-standard printout.

### 11.2.3. Readout

You can adjust the balance to ambient conditions (filter level) or to your own needs. <Readout> menu contains the following elements:

**FILTER (function disabled for Fast, Fast dosing, Precision profiles)**
Each measurement signal, before being displayed, is electronically processed in order to provide correct parameters specific for a stable measurement result (ready to be read).
You can determine signal processing rate, there are five different filters:
Range:

- very fast, fast, average, slow, very slow.

While setting the filter, consider the actual operating conditions. In the case of very good operating conditions, select average or fast filter, in the case of rough conditions, select slow or very slow filter.

***Caution:***

- *For precision balances, it is recommended to select very fast, fast or average filter÷,*
- *For analytical balances and microbalances, it is recommended to select average, slow or very slow filter÷.*

**Value release (option disabled for Fast, Fast dosing, Precision profiles)**
The parameter has been designed to determine when the stability marker is to be displayed.

There are three different settings:

- fast, fast and reliable, reliable.

***Caution:*** *Both parameters, filter and value release, determine how long it takes to obtain stable result.*

**Autozero function**

The function has been designed to enable automatic control and correction of zero indication.

If the function is enabled, the subsequent measurement results are compared to each other in constant time intervals. If the results differ less than declared AUTOZERO range, e.g. 1 division, the balance is automatically zeroed, and the pictograms of stable indication – ◣◢ and precise zero – →0← are displayed. Active Autozero function means, that each measurement starts with the precise zero. There are, however, some cases when this function can be a disturbing factor for the measuring process, e.g. very slow placing of a load on the weighing pan (load adding, e.g. pouring, filling). In such case, the system correcting zero indication may also correct the actual indication of a load placed on the weighing pan.

Values: **NO** - autozero function disabled.
**YES** - autozero function enabled.

**Autozero function: Dosing (option disabled for Fast, Fast dosing, Precision)**

The function has been designed to enable/disable autozero function for Dosing.

Options:

**NO** - autozero function disabled automatically when Dosing mode is run.

**YES** - autozero function enabled automatically when Dosing mode is run.

**Last digit**

The function has been designed to enable/disable visibility of the last decimal place of measurement result. Values:

- **Always:** all digits are displayed.
- **Never:** last digit disabled.
- **When stable:** last digit displayed only when the result is stable.

**Last digits quantity**

This function enables declaring the number of hidden last digits of the result. The function has three settings and works in connection with the <Last digit> option:

- **1:** the last digit of the result.
- **2:** the last two digits of the result.
- **3:** the last three digits of the result.

**Ambient conditions**

Parameter relating to ambient and environmental conditions of the workstation. For unstable ambient conditions, it is advisable to set the parameter to 'Unstable' value. By default, the parameter is set to 'Stable' value.

'Stable' value results with faster operation, i.e. weighing takes much less time than in the case of 'Unstable' value set.

- **Unstable; Stable.**

### 11.2.4. Units

For a selected profile, you can declare a start unit, supplementary unit and two custom units.

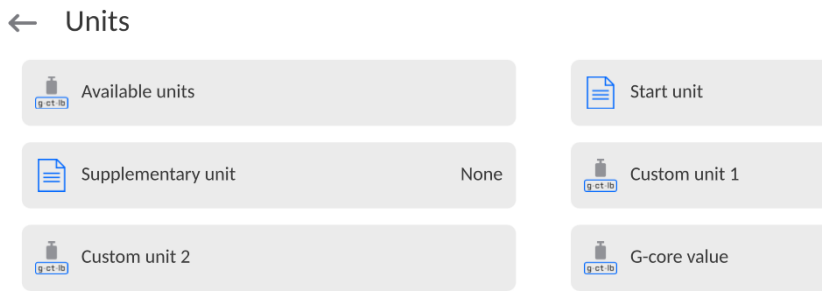


Units menu enables you to enter the value of gravitational acceleration force characteristic for a particular place of use. It is obligatory should the balance be used to determine mass in [N].

**Custom unit features:**

- Formula (*custom unit recalculation formula*): Coefficient * Mass or Coefficient / Mass.
- Coefficient (*coefficient for custom unit recalculation*)
- Name (*unique unit name to be displayed next to the result - max 3 characters*)

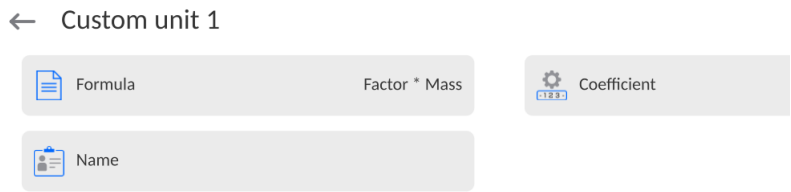


Newly designed custom unit name is added to the list of accessible measuring units (refers to non-verified balances exclusively).

## 12. WORKING MODES – General Information

5Y series balances feature the following working modes:

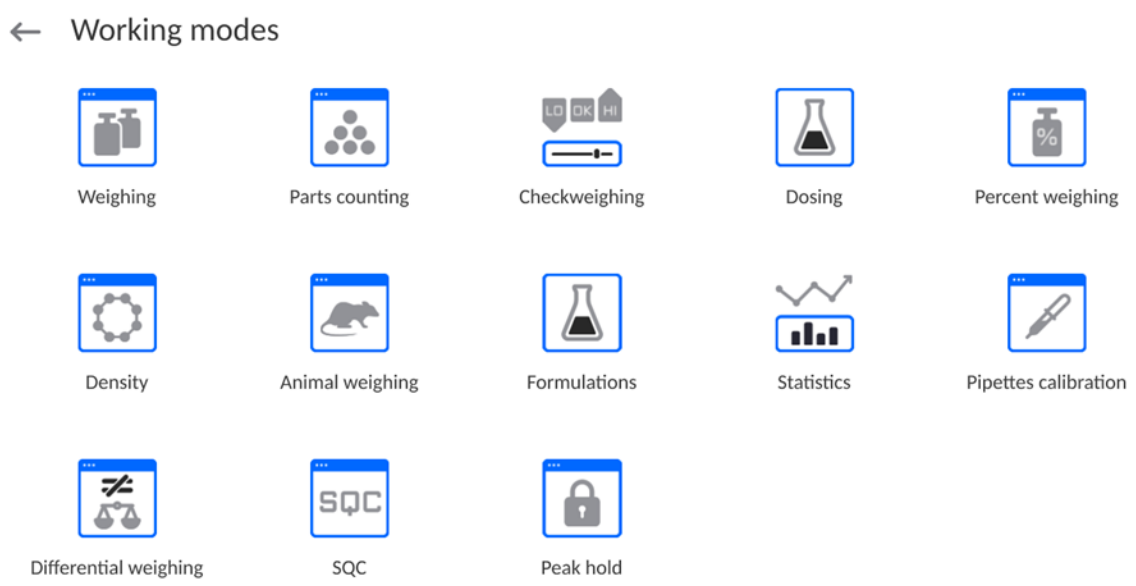

**Weighing**
Means of operation: weight of a load is determined through an indirect measurement. The balance measures gravitational force which attracts the load. The obtained result is processed and displayed on the balance screen in a digital format.

**Parts counting**
Means of operation: based on a weight value of a single piece, it is possible to count pieces quantity; necessary conditions: the weight value of a single piece is determined with sufficient accuracy, the mass of all the pieces is the same.

**Checkweighing**
Means of operation: control of sample's mass carried out with reference to specified thresholds, it is necessary to give the value of min threshold <LO> and max threshold <HI>.

**Dosing**
Means of operation: it is necessary to specify sample's target mass to be obtained by dispensing (pouring, filling, etc.).

**Percent weighing**
Means of operation: control of percent ratio of a test sample in relation to a reference sample. Obtained data provides info on how much the test sample differs from the adopted reference sample.

**Density**
Means of operation: based on Archimedes principle, it is possible to determine density of solids and liquids. Density mode requires use of an optional density determination kit.

**Animal weighing**
Means of operation: mass measurement carried out with use of filters which dampen animal moves on a weighing pan; the filters enable obtaining correct measurement result.

**Formulations**
Means of operation: by mixing number of ingredients you can obtain particular mixture; in order to program a given formulation, it is necessary to give mass values for respective ingredients.

**Statistics**
Means of operation: carried out measurements are used to calculate statistical data such as Min, Max, deviation, etc.

**Pipettes calibration**
Means of operation: calibration of pipettes in accordance with ISO 8655 standard procedure or with regard to user requirements.

**Differential weighing**
Means of operation: analysis of change of sample mass over time.

**Statistical quality control**
SQC is a mode useful in the course of packing process. It aims at monitoring and/or controlling product packing. It enables detecting product deficiency and excess.

**Peak hold**
Means of operation: freeze of max weight value on a display (max. indication reflecting the greatest force exerted on a pan).

**Packaged goods control** Control of packaged goods in accordance with Packaged Goods Control regulation. *(function disabled for standard balance models).*

**Mass control**
Fast statistical control of samples in accordance with requirements of quality systems and/or internally adopted standards. *(function disabled for standard balance models)*

Particular working modes feature specific settings. The settings enable adapting mode operation to your individual needs. The specific settings are activated upon selecting a respective profile. For detailed description of specific working mode settings, refer to the given working mode section.

### 12.1. Running Working Mode

To run working mode other than currently operated one:

- Slide down the menu at the top of the display.

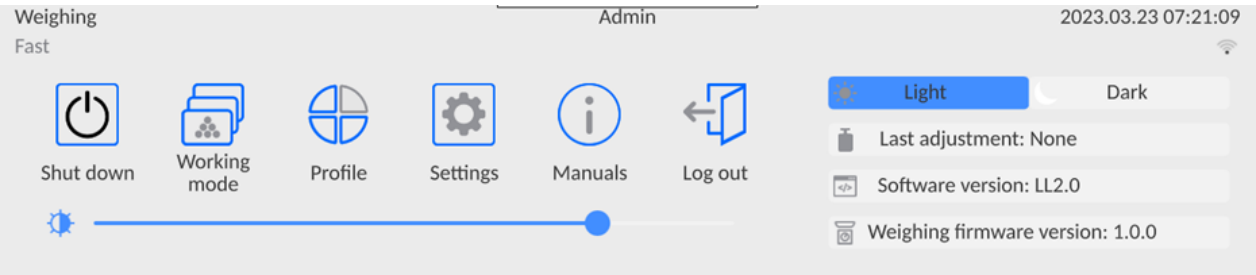


- Press <Working mode> option
- List of all working modes is displayed.
- Select the mode that is to be operated.

### 12.2. Working Mode Parameters

Each working mode has programmable parameters determining its functioning.
To access particular working mode parameters:

1. Slide out the menu on the left.

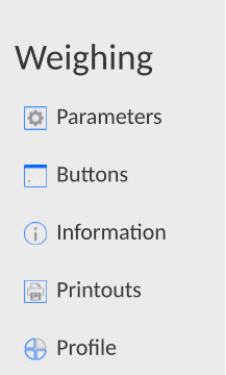


2. The following menu is displayed:
   - <Settings> - additional options.
   - <Buttons> - quick access buttons configuration.
   - <Information> - setting data that is to be displayed in the workspace.
   - <Printouts> - setting printout type and content.
   - <Profile> - profile settings
3. Enter particular submenu and select the component that is to be modified.

Description of basic parameters of <Settings> menu is to be found in section 13.6, *Additional Parameters of the Weighing Mode*. For detailed information on all but basic parameters of particular working modes, read given working mode section.

### 12.3. Quick Access Buttons, Proximity Sensors

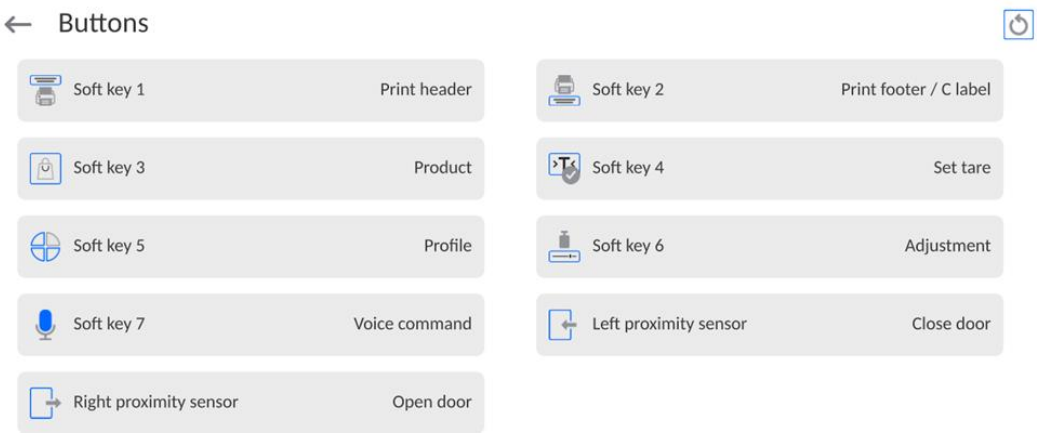


You can quickly restore default key arrangement in the bottom bar of the display, to doit click button (top right-hand corner).

You can define up to 7 quick access buttons, which are to be displayed in the bottom bar. Upon assigning a function to a button a corresponding pictogram is displayed in the bottom navigation bar of the home screen. Each working mode features customized set of buttons. For complete buttons list, read Annex B. These are so called quick access buttons for

triggering the most often performed operations. Another way to add or change a button is to press and hold a field in the button bar for about 3s.

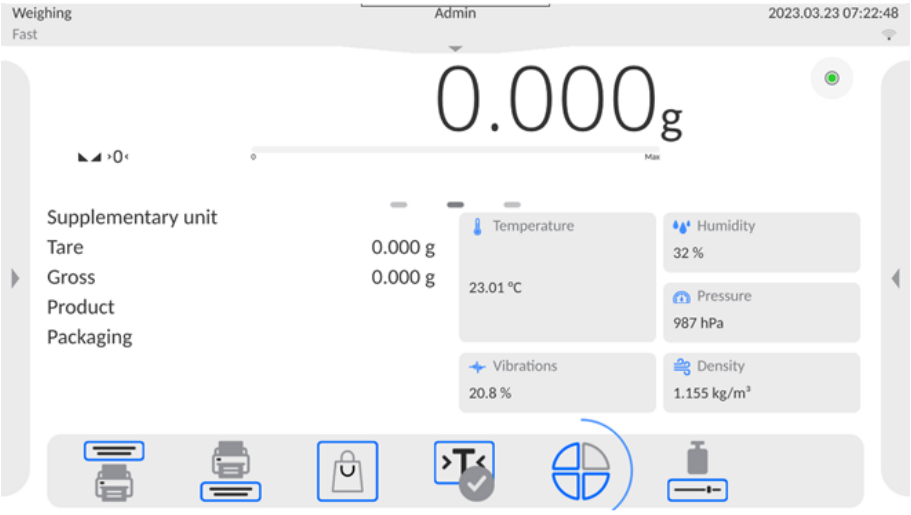


A window with the available buttons is displayed automatically.

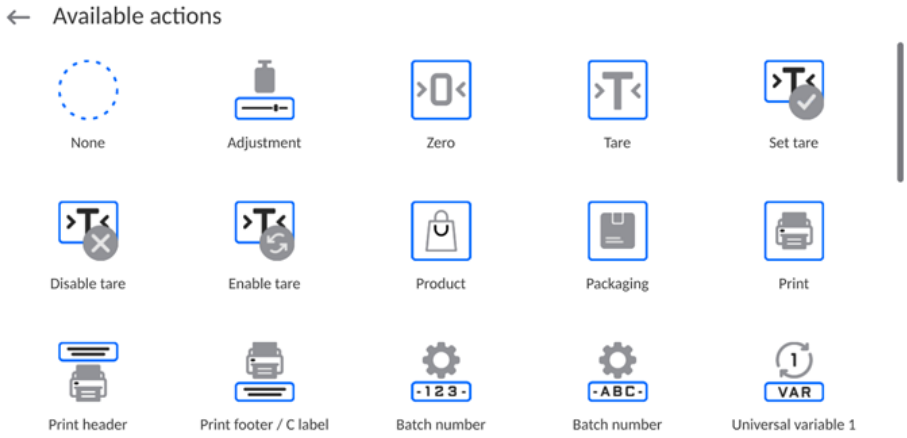


Press the respective button; the software returns to the home screen, and the selected button appears in the place where it was activated.

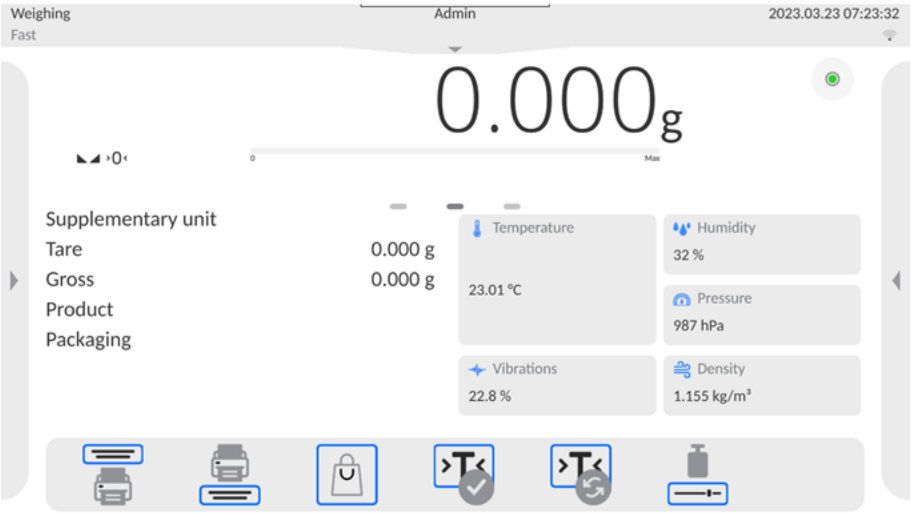


***Caution:*** *You can view the user manual saved to the balance memory. In order to take advantage of this function, add Help* ? *button to the tool bar.*

### 12.3.1. Proximity Sensors

The balance is equipped with two proximity sensors which enable touch free control.
The program detects four motions performed around the sensors:

1. Hand in a close vicinity to the <**Left proximity sensor**>.
2. Hand in a close vicinity to the right sensor <**Right proximity sensor**>.

### 12.3.2. Automatic Door

Settings for devices equipped with automatic door opening and closing mechanism. The settings concern quick access buttons and proximity sensors.

**MYA 5Y series balance:**

- **Open/close door** – parameter for changing door state; e.g. door closing when the weighing chamber is open, and door opening when the weighing chamber is closed.
- **Left door** – changing position (open/close state) of the door on the left side of the weighing chamber.
- **Right door** – changing position (open/close state) of the door on the right side of the weighing chamber.

**XA 5Y.M.A and XA 5Y.A series balance:**

- **Open** – weighing chamber door opening.
- **Close** – weighing chamber door closing.
- **Open/close door** – parameter for changing door state, e.g. door closing when the weighing chamber is open, and door opening when the weighing chamber is closed.

To swap from automatic to manual door opening mode in the XA 5Y.M.A and XA 5Y.A balance:

1. Turn the knob by 180 degrees into the position as shown in the picture below (with the groove milled in the upper position).

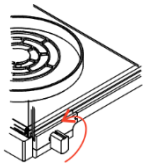

To swap from manual to automatic door opening mode in the XA 5Y.M.A and XA 5Y.A balance:

1. Turn the knob by 180 degrees into the position as shown in the picture below (with the groove milled in the bottom position).

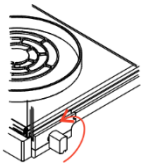

2. Move the left door with your hands back and forth to couple with the mechanism.
   Door coupling is easy to be sensed (the pawls get engaged with the notch).

## 12.4. Information

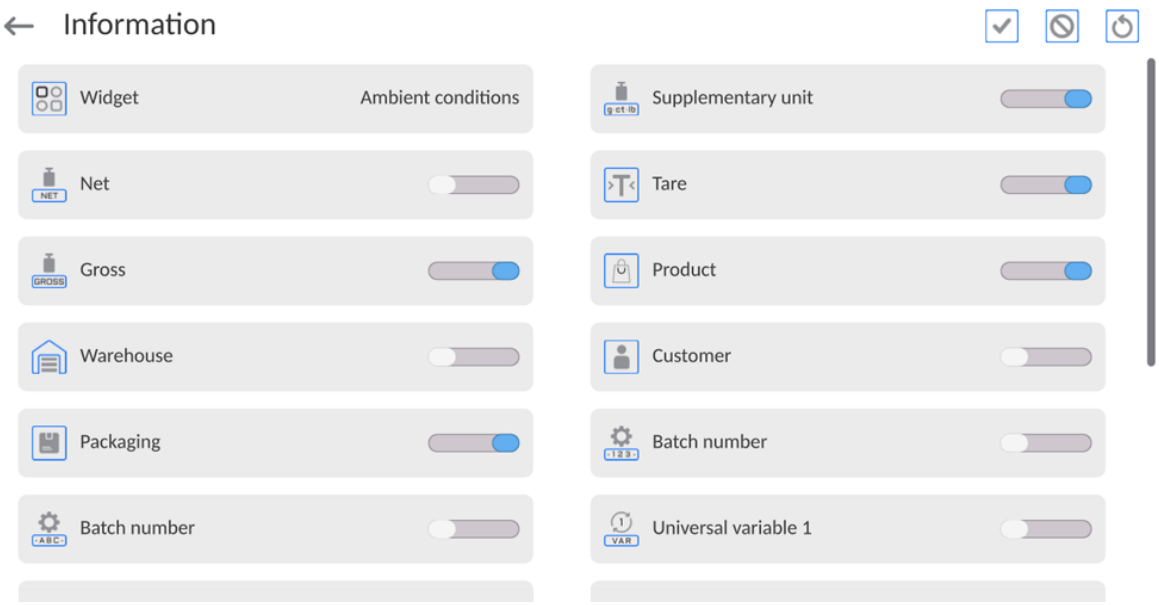


You can quickly select/deselect info to-be-displayed, to do it use top right-hand corner buttons.

| | |
|---|---|
| | Press to deselect all marked information. |
| | Press to select all marked information. |
| | Press to restore default settings. |

Information related to the weighing process is displayed on the left side of the display.

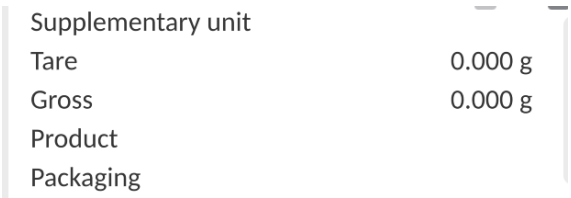


The workspace can contain up to six data. Mind that if you select more, only the first six of them are displayed.Each parameter features two options:

- – data enabled.
- – data disabled.

## 12.5. Printouts

<Printouts> menu comprises three setting sections:

1. Standard printouts: <Header printout template>, <Weighing/label printout template>, <Footer/C label printout template>,
2. Non-standard printouts: <Printout/label database>
3. Parameters enabling to set how many times the header, the weighing section, the footer, is to be printed upon single pressing of the button triggering particular printouts.

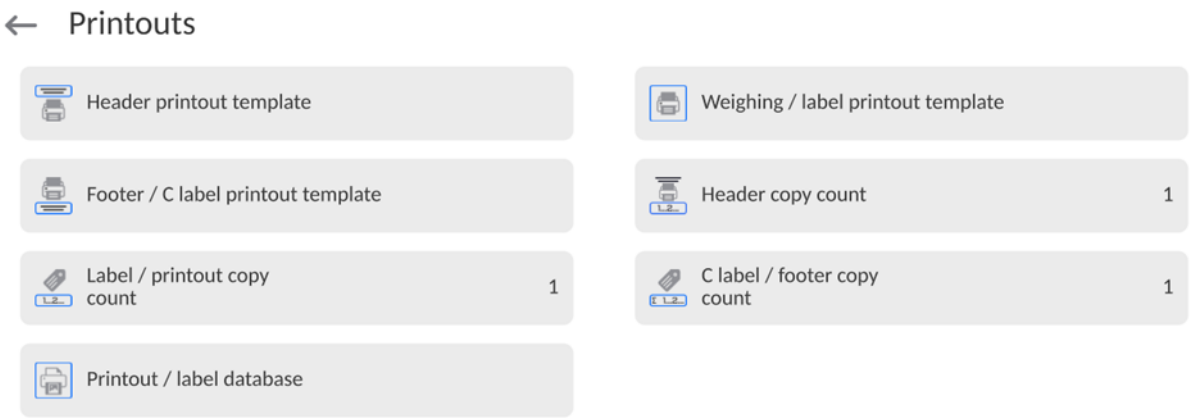


**Standard printout** comprise 3 sections featuring numerous variables. Set for each variable that is to be enabled on the printout, set for each variable that is to be excluded from the printout.
To quickly change the settings press buttons located in the top right-hand corner.

| | |
|---|---|
| | Press to deselect all marked variables. |
| | Press to select all marked variables. |
| | Press to restore default variables. |

**Procedure:**

1. Press name of a selected template (Header – GLP Printout – Footer) and select variables that are to be printed.
2. If a printout is a non-standard one, create it.

| HEADER | GLP PRINTOUT | FOOTER |
|---|---|---|
| – Non-standard printout<br>– Dashes<br>– Working mode<br>– Date<br>– Time<br>– Balance type<br>– Balance S/N<br>– Operator<br>– First and last name<br>– Level status<br>– Customer<br>– Warehouse<br>– Product<br>– Packaging<br>– Universal variable 1 … 5<br>– Empty line<br>– GLP report<br>– Non-standard printout | – Non-standard printout<br>– N (measurement number)<br>– Date<br>– Time<br>– Level status<br>– Customer<br>– Warehouse<br>– Product<br>– Packaging<br>– Universal variable 1 … 5<br>– Net<br>– Tare<br>– Gross<br>– Current result<br>– Supplementary unit<br>– Mass<br>– MW-Method<br>– Reference tare<br>– Minimum sample<br>– Minimum sample status<br>– Mass value for a titrator<br>– ID<br>– Non-standard printout | – Non-standard printout<br>– Working mode<br>– Date<br>– Time<br>– Balance type<br>– Balance S/N<br>– Operator<br>– First and last name<br>– Level status<br>– Customer<br>– Warehouse<br>– Product<br>– Packaging<br>– Universal variable 1 … 5<br>– Dashes<br>– Empty line<br>– GLP report<br>– Signature<br>– Non-standard printout |

**HOW TO OPERATE PRINTOUTS**

1. In order to print variables of the GLP PRINTOUT section, press button on the operation panel; only variables with attribute can be printed (see the above list).
2. Variables with attribute, present in the HEADER and FOOTER, are printed **ONLY** upon pressing **PRINT HEADER** and **PRINT FOOTER** pictograms. The pictograms have to be added to the bottom bar of the display as quick access buttons. *(For detailed instruction on how to add quick access buttons to the bottom bar of the display, go to section 12.3).*

| | |
|---|---|
| Print header data | Print footer data |

***Caution:***
*Measuring units for mass indication:*

- *Net – the main measuring unit (adjustment unit)*
- *Tare – the main measuring unit (adjustment unit)*
- *Gross – the main measuring unit (adjustment unit)*
- *Current result – currently displayed measuring unit*
- *Supplementary unit – supplementary measuring unit*
- *Mass – the main measuring unit (adjustment unit)*

**Non-standard printout**

Non-standard printout may contain: TEXTS and VARIABLES (acquired from the software during printout)**.** Each non-standard printout is a separate project, featuring a specific name by which it is identified and saved to the database of printouts.

**Procedure:**

1. Press <Non-standard printout> entry.
2. Press <Add> button, window featuring Name/Code/Project data opens.
3. Set name and code of a printout.
4. Press <Project> button.
5. Printout edit box with an on-screen keyboard is displayed.
6. Use the keyboard to design printout template, the printout may contain texts and variables.

***Caution:***

- *It is possible to add a printout by import of configured texts from flash drives connected to balance's USB port.*
- *Printout's name is ONLY a NAME, and it is not part of its content.*
- *For information on how to design a non-standard printout template, read section 28.10 Printouts.*

### 12.6. Profiles

Profiles function has been described in section 11 *Profiles*.

# 13. WEIGHING

Load the weighing pan. Wait for a stable indication (stability marker, ◣◢) and read the measurement result.

Record/printout of the measurement result is available upon pressing <↵PRINT> key:

- for verified balances – only stable measurement result is saved or printed (stability marker ◣◢ visible on the balance's display),
- for non-verified balances – stable and unstable measurement results are saved or printed (regardless of the stability marker ◣◢ absence). For unstable measurement result, a question mark **<?>** is printed next to the mass value.

## 13.1. Weighing Unit Selection

Change of the weighing unit is carried out by pressing the weighing unit pictogram visible next to the measurement result. Upon pressing the weighing unit, a list of available units is displayed. Select the unit you need, the software automatically recalculates the indicated value.

Options:

| *unit* | *symbol* | *verified balance* | *unit* | *symbol* | *verified balance* |
|---|---|---|---|---|---|
| gram | [g] | yes | Taele Singapore | [tls] | no |
| milligram | [mg] | yes* | Taele Taiwan | [tlt] | no |
| carat | [ct] | yes* | Taele China | [tlc] | no |
| pound | [lb] | no | Momme | [mom] | no |
| ounce | [oz] | no | Grain | [gr] | no |
| ounce Troy | [ozt] | no | Tical | [ti] | no |
| pennyweight | [dwt] | no | Newton | [N] | no |
| Taele Hongkong | [tlh] | no | Mesghal | [msg] | no |

** - units accessibility is conditioned by the balance type.*
*For non-verified balances, all non-SI units are available.*

## 13.2. Good Weighing Practice

To assure long-term operation and correct mass measurements, follow the rules presented below:

- Start the balance with no load on the weighing pan (permissible load value on the weighing pan at start is ±5% of the maximum capacity).

YES

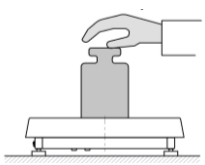

NO

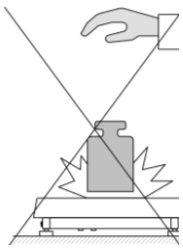

Load the weighing pan steadily avoiding shocks: Go to Setup/Misc./Vibrations detection parameter and enable control of weighing pan loading (for detailed information, read section 32.8).

YES NO

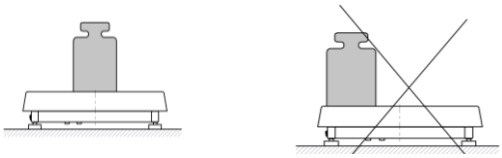

Place weighed loads centrally on the weighing pan.

NO NO

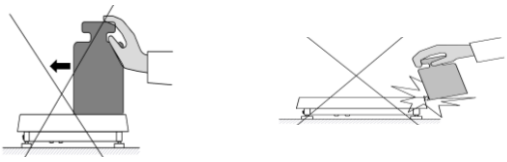

Avoid side loading, in particular side shocks.

Prior to weighing or in the case of ambient conditions change, it is necessary to carry out balance adjustment.

- Prior to the measurement, it is recommended to load the weighing pan several times with mass close to the maximum capacity. In the case of instruments offering two reading units (d), the initial load of the weighing pan depends on the reading unit value.
- Example: For the XA 82/220.5Y balances with $d_1$= 0.01mg and $d_2$=0.1mg, load the weighing pan as follows: 50 g weight for measurements with $d_1$=0.01mg and 200 g weight for measurements with $d_2$=0.1mg.
- Make sure that the unloaded weighing instrument indicates zero (→0← pictogram) and check whether the measurement is stable (◣◢pictogram); if not, press >0< button.
- Select weighing unit: press the unit next to the result 0.0000g or press g·ct·lb w button at the bottom of the display.

***Caution:*** *In accordance with the EN 45501 standard, verified balances cannot display mass value below -20e. If the indication value is below -20e,* <***Lo mass***> information is displayed. *Press* >0< button to zero the balance.

| | |
|---|---|
| Do not unplug the balance from the mains between measurement series. It is recommended to turn off the display by pressing the button located in the top menu. | |
| To turn the balance on, press the button on the indicator.<br>Once the start-up procedure is complete, the balance is ready for next weighings. | 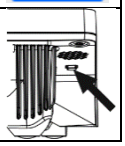 |

### 13.3. Levelling

Ultra-microbalances and microbalances, and the A- class microbalances and analytical balances are equipped with **Reflex Level System**, which allows monitoring of the balance level and its automatic levelling.

It guarantees:

- ground tilt test,
- fully automatic balance levelling,
- balance level control,
- confirmation of balance levelling printed on adjustment reports and weighing reports.

Upon switching the balance on, the levelling takes place automatically. Each time before the internal adjustment, the level is checked. When the balance is not levelled, the internal adjustment takes place only upon prior levelling.

**Procedure of user-performed balance levelling:**

- Press level status pictogram< >, it is displayed in the upper right corner of the operation panel.
- Control panel of levelling function is displayed. Along with the level indicator, balance view is presented.

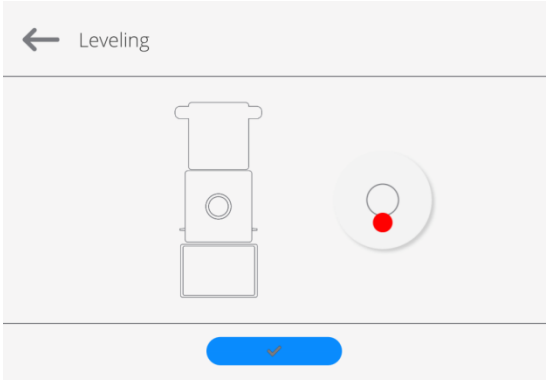


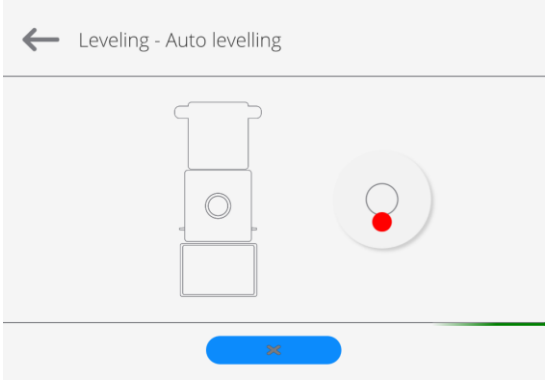


- Press < > button – levelling process runs automatically; during the automatic levelling, the feet engines operation can be heard.
- To abort the levelling process, press < > button.
- When the marker takes central position, its colour turns from red to green < > – the balance is correctly levelled.
- Press button to return to the home screen.

Remaining balances are equipped with **Level Sensing System**. This solution enables continuous monitoring of the balance level during operation, which is signalled in the upper right corner of the display. If the level changes, the system signals it by changing the position of the level indicator and/or by triggering an alarm and going to the balance levelling screen.

**Procedure:**

1. Press level status pictogram , it is displayed in the upper right corner of the operation panel screen.
2. Control panel of level function is displayed. Along with the level indicator, balance view is presented.
3. Level the balance by turning its feet left/right, follow the blinking pictograms, < > – press to make level marker move toward the centre of the circle.
4. When the marker takes central position, its colour turns from red to green – the balance is correctly levelled.

### 13.4. Balance Zeroing

To zero mass indication, press key. Zero indication and the following pictograms are displayed: →0← and ◣◢. Zeroing operation means determining a new zero point, recognized by the balance as precise zero. The balance can be zeroed only when the indication is stable.

***Caution:*** *Indication can be zeroed only within* ***±2%*** range of *the maximum capacity. If the zeroed value is above* ***±2%*** *of the maximum capacity, then the software indicates a respective error message.*

### 13.5. Balance Taring

To determine net weight value, load the weighing pan with a packaging, wait for a stable indication and press key. Zero indication and the following pictograms are displayed: ***Net*** and ◣◢. Upon weighing pan unloading, the sum of tared masses with minus sign is displayed. You can assign a tare value to a particular product stored in the database. In such a case, the assigned tare value is automatically acquired upon selection of the given product.

***Caution:*** *It is impossible to tare negative values. When you try to tare negative values, the weighing instrument responds with an error message. In such a case, zero the indication and repeat taring procedure.*

**Entering Tare Value Manually**

**Procedure:**

- Press quick access button. The button is available regardless of the working mode you operate.
- An on-screen numeric keyboard is displayed.
- Enter tare value and press button.
- The balance returns to weighing mode. Tare value with „**–**" sign is displayed.

**Deleting Tare**
The displayed tare value can be deleted by pressing ZERO key on the operation panel, or by using programmable <Deactivate tare> function button.

**Procedure 1** - upon taking the tared load off the weighing pan:

- Press button,
- the <Net> marker gets deleted, a new zero point is determined.

**Procedure 2** - with tared load resting on the weighing pan:

- Press button,
- the <Net> marker gets deleted, a new zero point is determined.
- when the tare value exceeds 2% of the maximum capacity, -Err- message is displayed in order to inform you about the fact that operation cannot be carried out.

**Procedure 3** - when the tared load is on the weighing pan or upon taking the tared load off the weighing pan:

- press <Deactivate tare> programmable button,
- the NET marker is deleted,
- the display indicates tare value,
- to restore the last tare value press <Restore tare> button.

### 13.6. Use of Air Buoyancy Compensation Factor

The application enables correcting mass measurement errors in the course of:

1. weighing loads of density considerably different from the density of a standard that has been used to adjust the balance. Typically, the balance is adjusted with a steel mass standard of ~8.0g/cm$^3$ density or a brass mass standard of ~8.7g/cm$^3$ density. If loads made of other substances are weighed, then ratio indicated on below graph applies;

**Error value versus density of weighed sample**

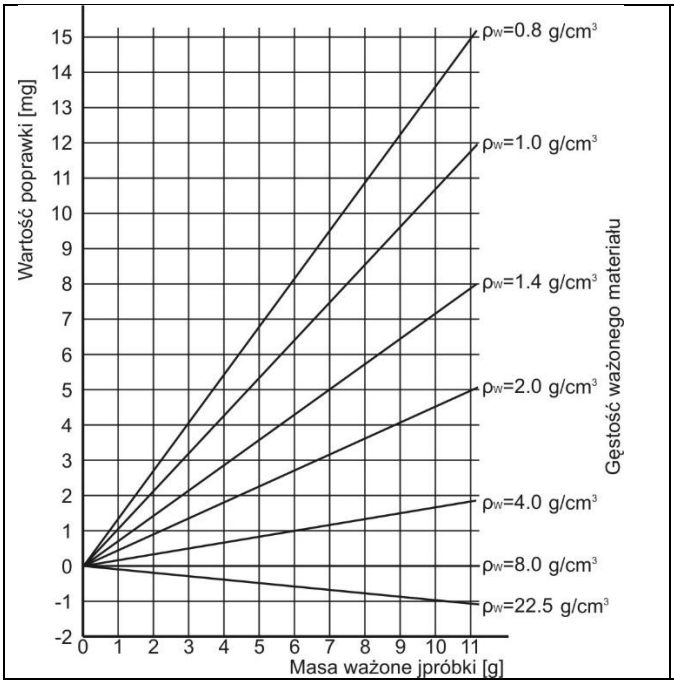


The graph presents correction values for mass depending on the density of weighed load, assuming the air density to be a constant value of 1.2 kg/m$^3$.

2. testing sample mass change within a few hours long period of time for a case when the sample mass is relatively constant (minor changes); it is assumed that air density changes affect the final result considerably, wherein the density is influenced by changes of pressure, temperature and humidity.

For measurements to be reliable, the density of the air in the laboratory and the density of the material to be weighed must be determined (depending on the ambient conditions, the measurement method and the properties of the material under test).

**FUNCTIONING**

The air buoyancy compensation procedure is to be used as follows:

1. Method 1:
   Enter air density value and the density value of the weighed sample to the balance memory.
   Wait, the software automatically calculates the correction factor for weighed mass. Next, the corrected value of weighed mass is displayed.

To avoid mistakes, the <!> symbol is presented next to the corrected mass value (on a display and a printout).

2. Method 2:
   Determine air density value using the balance program (semi-automatic operation) and enter the value of the weighed sample density to the balance memory.
   Determination of air density is carried out using a set of two mass standards, one made of stainless steel, and the other one of aluminium. Based on mass indications of the two standards, the program automatically calculates the air density and saves the value in the balance memory on operator's confirmation. Now, enter the density value of the weighed sample to the balance memory.
   Wait, the software automatically calculates the correction factor for weighed mass. Next, the corrected value of weighed mass is displayed.
   To avoid mistakes, the <!> symbol is presented next to the corrected mass value (on a display and a printout).

In order to enable/disable the air buoyancy compensation procedure, go to the user menu. The procedure only works in the weighing mode.

## AIR BUOYANCY COMPENSATION START-UP

**Procedure:**

- Enter home screen and slide out the menu on the left.
- Select <Settings> parameter.
- Select <Air buoyancy compensation> parameter.
  Parameter values:
  - Air buoyancy compensation – YES/NO.
  - Sample density (enter value of weighed sample density). If you use products from databases, then on product selection its density value is automatically uploaded.
  - Air density – parameter designed to enable you to select the method of entering the air density value.

**Parameter values:**

**VALUE** – select to open a window to enter a specified air density value (e.g.: determined by means of other methods). The entered value is used in the course of compensation. It is assigned automatically upon completed air density determination (to complete air density determination, press <✓> button).

**ONLINE** – select to make the balance acquire air density value from a connected THB sensor at a real time, if such is connected to the balance, or from an internal sensor installed in the balance.

If your balance features both types of sensors (THB and internal), then data from the THB supersedes the other. In such a case, go to ***Setup / Ambient conditions / Ambient conditions module*** parameter and set **SAVE or SAVE & ALERTS** value.

If your balance features only one set of sensors recording temperature, humidity and pressure, then correct ONLINE operation requires setting the following parameters:

- internal sensors exclusively – go to ***Setup / Ambient conditions / Ambient conditions module*** parameter and set NONE value,
- external THB sensor exclusively – go to ***Setup / Ambient conditions / Ambient conditions module*** parameter and set SAVE or SAVE & ALERTS value.

For correct balance cooperation with the THB sensor, it is necessary to set port's transmission parameters. They must be compatible with those of the THB sensor. The THB sensor's transmission parameters are detailed on its data plate.

On returning to the weighing mode, the display indicates an additional symbol **<!>**, as indicated in the figure below. From now on, the value of indicated mass is corrected, wherein the air buoyancy compensation factor and sample density are referred to.

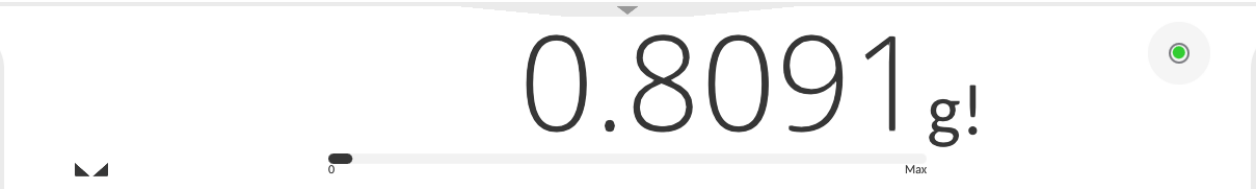


For the result to be corrected by the correct value, the correct values of air density and density of the weighed sample must be entered into the balance memory.

***Caution:*** *If the <AIR BUOYANCY COMPENSATION> parameter is set to <ONLINE> value, then the <**!**>* pictogram is not displayed*. This means that* ***Setup / Ambient conditions / Ambient conditions module*** *parameter is set to SAVE or SAVE & ALERTS value, and that there is either no physical balance-module connection, or that balance-module communication parameters are incorrect. In such a case, plug the module to balance ports COM 1 or COM 2 and set appropriate communication parameters, for the parameters refer to the module's data plate.*

### 13.7. Additional Parameters for a Weighing Process

Modification of the weighing functions enables programming balance operation.

**Procedure:**

- Slide out the menu.
- The following submenus are displayed: Settings, Buttons, Information, Printouts.
- Enter particular submenu and select the component that is to be modified

<Settings> - additional options related to the weighing mode,
<Keys> - defining quick access buttons,
<Information> - supplementary data on the weighing process displayed in an Info field,
<Printouts> - selecting printout type,
<SETTINGS> - weighing-process-related data such as:

- **Tare mode**
  Available options:
  - SINGLE
    mass value saved to the balance memory on single pressing of the TARE key. Subsequent pressing of the TARE key determines a new tare value. Selecting a product or packaging to which a tare value is assigned causes automatic deleting of the previously assigned tare value.
  - CURRENT SUM
    total value of currently entered product and packaging tare values (result of selection of product and packaging from the database) with possibility to add tare value entered manually. When a new tare value for a product or packaging is set again, then the tare value entered manually gets deactivated.
  - TOTAL SUM
    total value of all entered tare values.
  - AUTOTARE
    <u>Means of operation:</u>
    Each first stable measurement result is tared. The NET sign is displayed. Now you can determine the net mass of the weighed load. Upon unloading the weighing pan and autozeroing, the tare value is automatically deleted.
  - EACH MEASUREMENT: possibility to tare prior to each measurement in the series.

- **Automatic footer printout**

  Available options:

  MODE – None – manual footer printout,

  Sum of measurements – footer is printed when mass value entered in <Threshold> parameter gets exceeded.

  Measurements quantity – footer is printed when a pre-defined measurements quantity (a batch) set in parameter <Threshold> is carried out.

  THRESHOLD – setting the threshold value determining footer printout.

  For <Sum of measurements> parameter, threshold value is determined in measuring unit [g], for <Measurements quantity> parameter the unit is not determined; the provided value specifies carried-out measurements quantity.

- **Printout / Release mode**
  - PRINT/RELEASE BUTTON (manual operation)

    Never – printout disabled.

    First stable – first stable measurement is recorded.

    Each stable – all stable measurements are recorded.

    Each – printout of all measurements (stable and unstable); for verified balance, only stable measurements are printed out (as in <Each stable> setting).
  - AUTOMATIC MODE

    Never – printout disabled.

    First stable – first stable measurement is recorded upon loading of the weighing pan with a load; record of the next stable measurement result takes place only if the following conditions are met: weighing pan gets unloaded, measurement value lower than the value of the set threshold is displayed, a new load is placed on the weighing pan.

    Last stable – last stable measurement, registered prior to unloading, is recorded. The record takes place only if the following conditions are met: weighing pan gets unloaded, measurement value lower than the value of the set threshold is displayed.

    With interval – select this value to start automatic printout and record of indications to the WEIGHINGS database, carried out periodically in a specified time intervals. The interval is set in [min] in <INTERVAL> parameter. Interval range is 1 s - 9 h 59 min 59 s.

***Caution:*** *Each weighing result is printed and recorded (stable and unstable for a non-verified balance; stable for a verified balance).*
*Automatic operation with interval starts at the moment of switching the function on. The first stable weighing result of a value greater than the THRESHOLD value is printed and recorded as the first measurement. The following measurements are printed with frequency set in INTERVAL parameter. To stop the automatic operation with interval, switch the option off.*

- THRESHOLD:
  Mass value obligatory for operation of automatic printout, set in grams.
- INTERVAL
  Record frequency for automatic operation with interval

- **Statistics**

  settings for statistical calculation during operation.

Options:

- Global: statistical calculations are performed for all successive measurements, regardless of the selected product.
- Product: statistical calculations are performed for particular products.

– **Air buoyancy compensation**
Parameters allowing you to switch on the compensation and to enter weighed sample density data and air density data.

***Caution:*** *Function valid for the weighing mode exclusively. For detailed information regarding the operation and settings, refer to the previous section of this user manual.*

– **Minimum Sample**
Weighing mode settings comprise <Minimum sample> function. In order to use the function, it is necessary to enter data related to minimum sample determination methods, and minimum sample values for a given method. The data must be entered into the <Minimum sample> database. The database is empty in the standard balance version.
**Determining minimum sample and adding data** to the **<Minimum sample> database can be carried out by an authorized "RADWAG" personnel exclusively.**
Should you use the minimum sample function, and need data on the minimum sample to be entered to the balance menu, please contact the local representative of RADWAG.
Using reference weights, the authorized RADWAG employee determines the minimum sample for specified tare containers. This operation is carried out at the place of balance use and in accordance with requirements of the applied quality system. The obtained values are entered into the balance software: <Minimum sample> database.
For a particular method of minimum sample determination, it is possible to define few tare values, along with values of minimum sample, expiry dates of the carried out measurements and entered data. The settings are not to be edited by balance operator.
<Minimum sample> function guarantees that the results of weighing operation are comprised within the set tolerance, in accordance with applied quality management system of particular company.

***Caution:*** *Function valid for the weighing mode exclusively.*

Available options:

- METHOD
  Option allowing you to designate used quality standard. Press METHOD field to open a window with a list of database-stored methods, by means of which the minimum sample were determined. In order to add a new method, go to <Databases /Minimum sample>.
- MODE
  **Block** – select to display pictograms informing you on status of weighed mass (weighed mass below/above minimum sample) and to disable accepting the measurement result if it is below the minimum sample limit.
  **Warn** – select to enable display of respective pictograms informing you about the measured mass (whether it is lower than the MS value or higher than the MS value). You can accept a measurement that is lower than the MS value. Mind that on a printout it will be preceded by an asterisk (*).

***Caution:*** *For information on how to enter a method for minimum sample, go to section 28.7 <Databases /Minimum sample> of this user manual. New minimum sample values can be entered by an authorized RADWAG personnel exclusively.*

**Weighing with use of <MINIMUM SAMPLE> function.**
If in the course of weighing you want to find out whether a particular measurement value is higher than the MS value, specified for a given weighing range, then <Minimum sample> function must be on. To turn the function on, go to the weighing mode settings.

**Procedure:**

1. Slide out the menu on the left.
2. The following submenus are displayed: Settings, Buttons, Information, Printouts, Profile.
3. Select <Settings> menu - additional options for the weighing process.
4. Enter <Minimum sample> field.
5. Wait for the Minimum sample window to open, press <Method> field, a window with a list of database-stored methods opens.

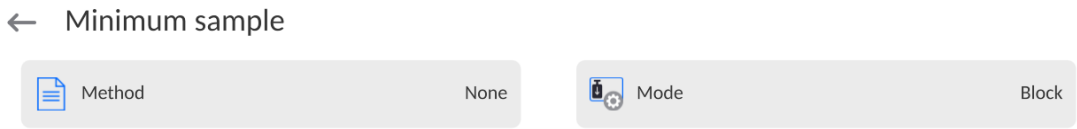


6. Select respective method.
7. Previous menu is displayed.
8. Press <Mode> parameter.
9. Settings box is displayed, select respective option:
   **Block** – select to display pictograms informing you on the status of weighed mass (weighed mass below/above minimum sample) and to disable accepting the measurement result if it is below the minimum sample value.
   **Warn** – select to enable display of respective pictograms informing about the measured mass (whether it is lower than the MS value or higher than the MSvalue). You can accept the measurement that is lower than the MSvalue. Mind that on a printout it will be preceded by an asterisk (*).
10. Set the parameters and exit the menu.
11. Section presenting the weighing result comprises additional pictogram providing supplementary information. The pictogram changes in the course of weighing, it informs you on the weighed sample mass; the information is referred to the declared minimum sample value.

**Pictograms providing MS-related information:**

| | |
|---|---|
| Min | Weight value lower than the specified MS value. |
| OK | Weight value higher than or equal to the specified MS value. |
| Min | Weight value lower than the specified MS value. A pictogram with a clock informs on expiry of the minimum sample validity period (it is displayed two weeks before the determined expiry date). |
| OK | Weight value higher than the specified MS value. A pictogram with a clock informs on expiry of the minimum sample validity period (it is displayed two weeks before the determined expiry date). |
| M | The validity period of the minimum sample has expired. The minimum sample settings need to be modified. The minimum sample settings can be modified by an authorized RADWAG personnel exclusively. |

***Caution:*** *If more than one reference tare value is programmed (with corresponding minimum sample value) then the indicated value automatically moves to a range corresponding to the weight of the tared container. At the same time, the required minimum mass is changed.*

### 13.8. Cooperation with Titrators

In order to provide correct cooperation with TITRATORS, go to standard printout content settings and set <Mass value for a titrator> parameter to <Yes> value. With this, other variables for the printout are turned off.

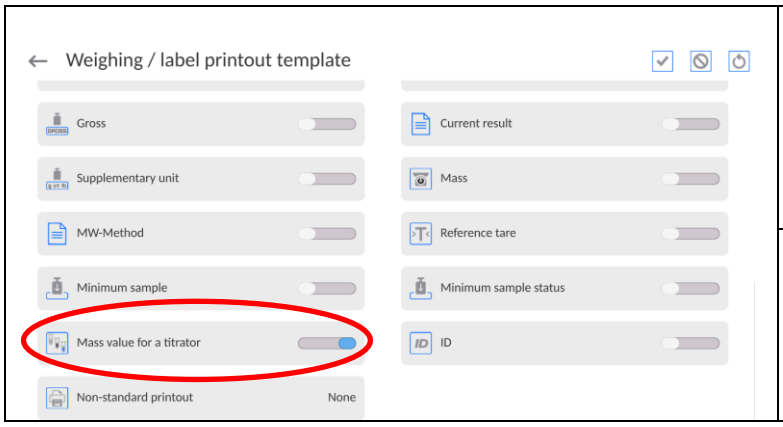


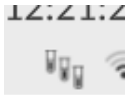

The pictogram informs on a special format of mass printout, permissible by TITRATORS.

### 13.9. Ambient Conditions - Vibrations

Vibrations are a major cause of errors. Since vibrations spread in all directions, vibration analyzers and meters must carry out measurements in three axes concurrently. Ambient conditions module implemented in RADWAG balances of 5Y series features such option.
Analytical balances are precise weighing instruments; therefore, even insignificant oscillations influence their operation. Humans are most often unable to sense vibrations. In order to detect them, it is necessary to use special equipment. Vibration sensor, along with a module that analyses the influence of the vibrations onto the measurement, informs the user in real time on the possibility of occurrence of errors caused by high-frequency vibrations.
Usually the vibrations are dampened with use of anti-vibration tables. A signalling device, i.e. ambient conditions module equipped with a vibration sensor, is used to support the process of vibrations dampening. Such device comes standard with each 5Y series balance. With use of the said signalling device, it is possible to evaluate workstation conditions and, if necessary, to find more convenient place of use. It is often impossible to find a place where no vibrations occur, however the signalling device allows the operator to determine when and where to expect vibrations of the lowest-frequency.
Due to the following 3 factors: specified values of free vibrations, resolution, and permissible weighing instrument errors, the analysis must be carried out with regard to the right effective value (rms value) and bandwidth. Such analysis is performed on each 5Y series balance in real time.
In the case of the module that is an integrated part of the balances manufactured by RADWAG, the filters analyse those frequencies to which the weighing devices are sensitive. In the case of balances, effective value (rms value) measured from 3 axes and for a particular time interval is given, such value provides information on amplitude and history of disturbances.

Radwag has designed an analysis method and selected permissible vibration thresholds respectively to make signalling device operation both effective and convenient (not troublesome). Balance screen displays balance-registered vibration level in percent.

Vibration threshold cannot be changed, however the operator can modify settings in a way ensuring that alerts are displayed in the most convenient way, depending on the needs. By default, the set value is 100%.
Example of settings modification:

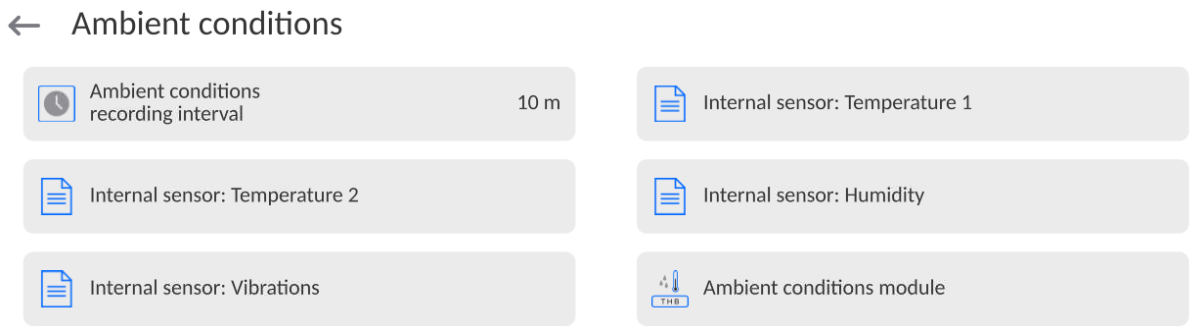


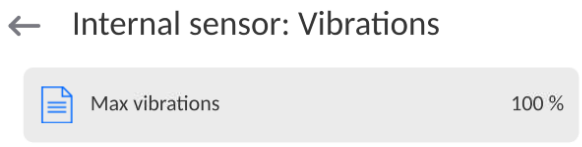


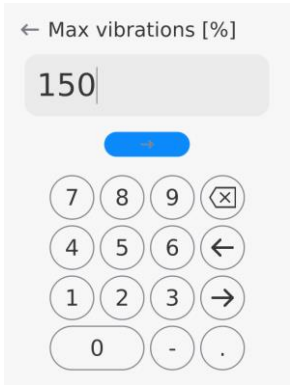


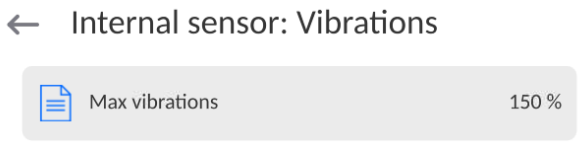


For better understanding, analyse the following example (the values used below are exemplary ones, they were not taken from the balance).

1. Assumed vibration threshold set by default on 5Y series balance: 100 mm/s$^2$.
2. Max vibrations value: 100% (threshold for alert– pictogram colour change, from green to red). Pictogram colour is green for vibrations within 0 – 100 mm/s$^2$ range, for vibrations value of 101 mm/s$^2$, the pictogram changes to red.
3. Max vibrations value: 150%. Pictogram colour is green for vibrations within 0 - 150 mm/s$^2$ range, for vibrations value of 151 mm/s$^2$, the pictogram changes to red.

Vibrations are signalled by a respective pictogram displayed in the weighing result window.

A window with the current sensor values is presented in the middle of the display on the right. Displayed vibration value (Vibrations) is the effective value registered within the most recent 2 seconds. This value is refreshed every 2 seconds. If the screen displays 100%, this means that vibrations have reached the threshold set by RADWAG.

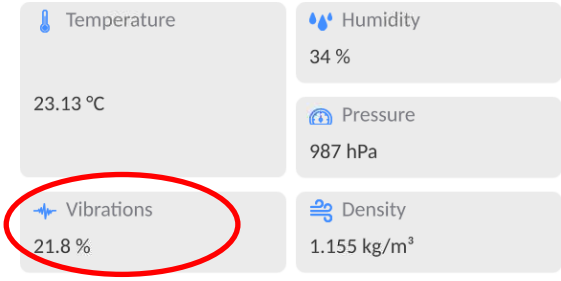


Vibrations are recorded in the database, this allows to analyse the history of ambient conditions quality.

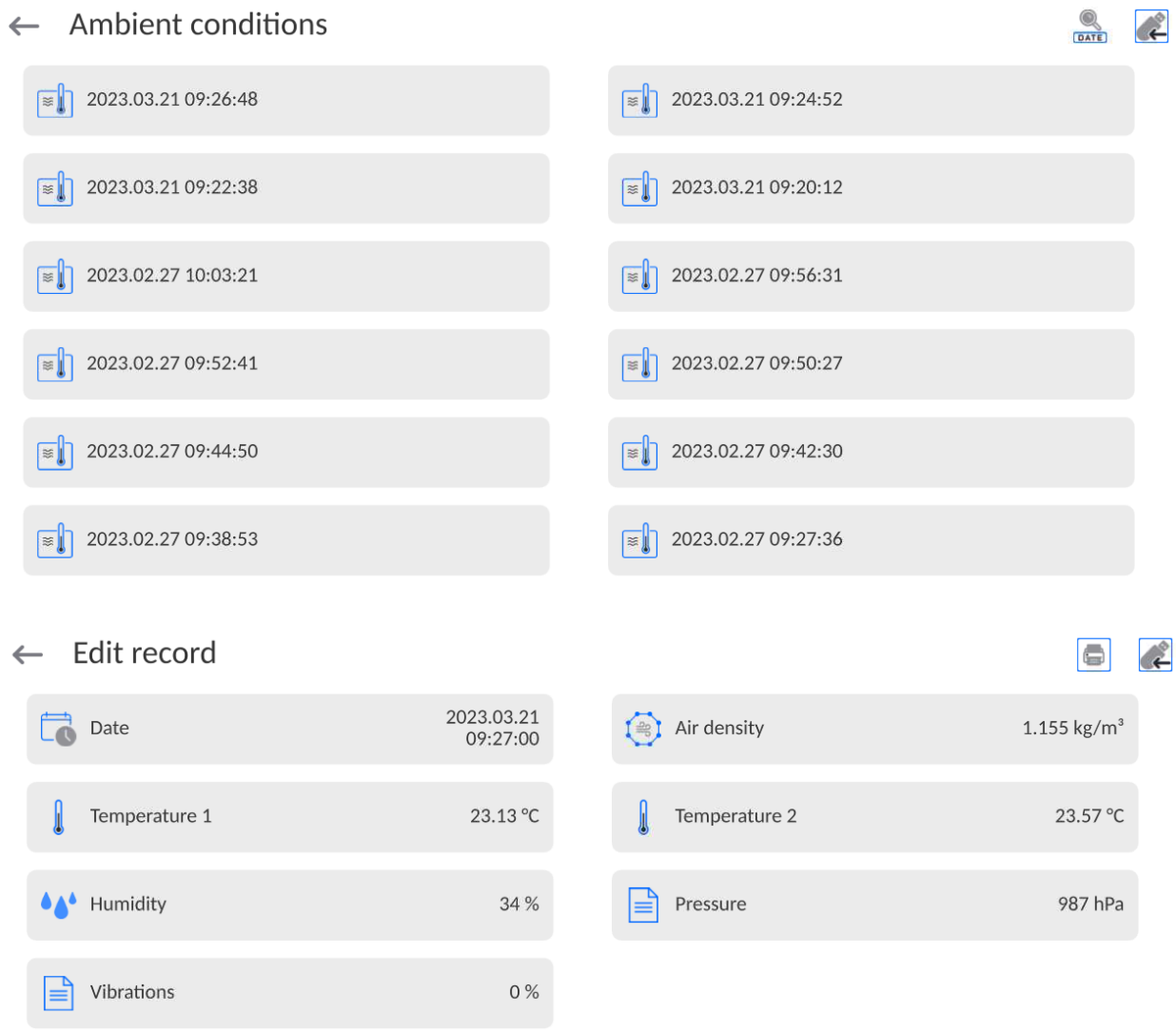

The effective value of vibrations registered by the balance over a declared time interval is saved (from the moment of the last record) – Setup/Ambient conditions/Ambient conditions recording interval.

By default, the interval is set to 10 min; this value may range between 1 - 60 min. Record analysis allows the user to select the optimal time of the day for the measurements to be carried out, i.e. the time when the ambient conditions influence the vibrations the least. Mind that there are places where the most convenient working conditions occur after-hours.

Along with each measurement, data on ambient conditions alerts and level of vibration that occurred in the course of the measurement are saved.

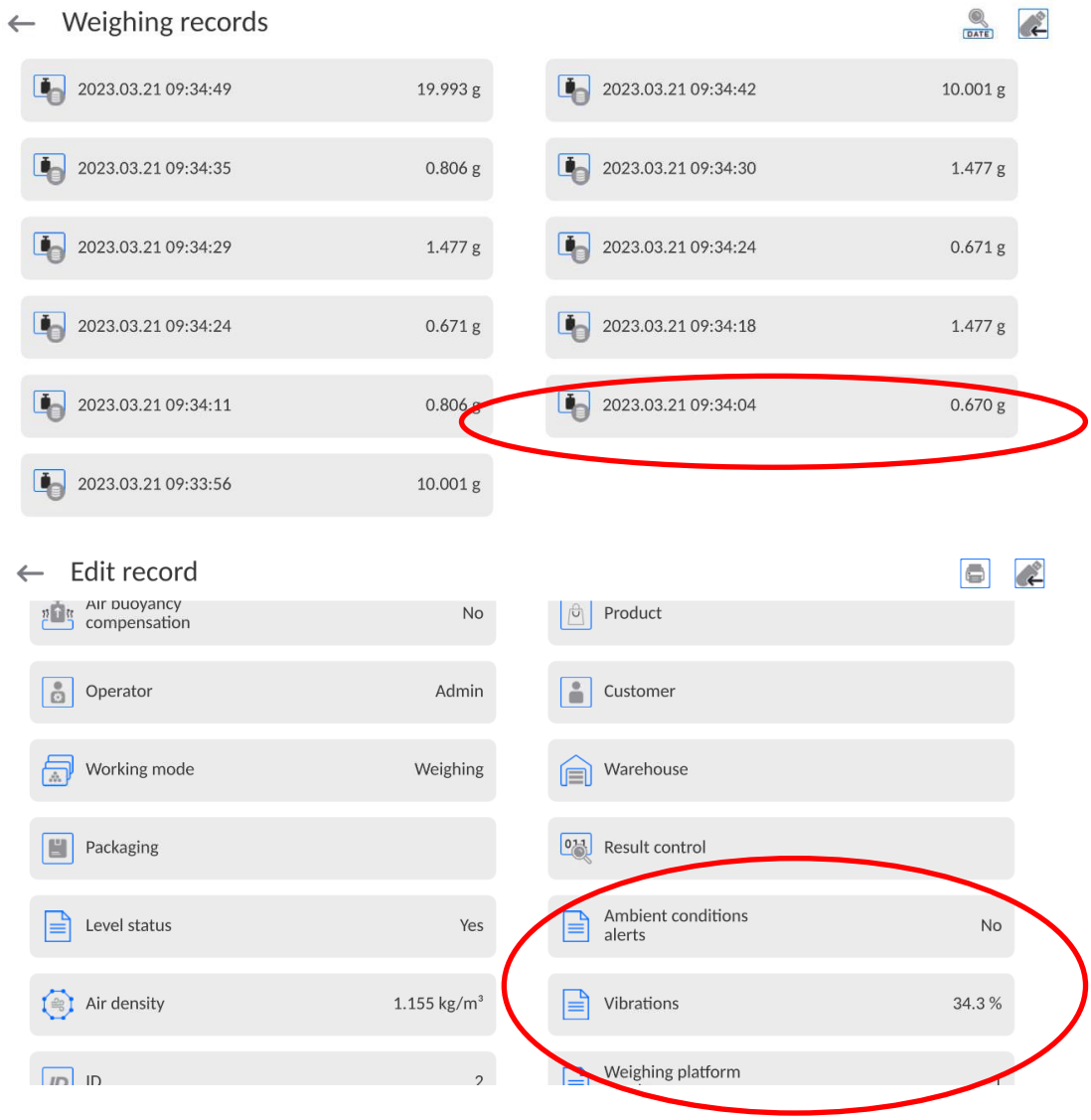

# 14. PARTS COUNTING

**<Parts counting>** is a working mode enabling you to determine the quantity of small pieces of the same mass, which determination is done on the basis of reference weight value of a single piece. The single piece weight can be:

- determined using a reference quantity of parts subjected to weighing,
- acquired from the database of products,
- entered manually as a numeric value.

**Mode activation procedure:**

- Go to the home screen, slide down the top menu and press <> field. <Working modes> submenu with list of working modes opens.
- Select <> Parts counting> mode, the home screen is displayed automatically, wherein the top bar of the screen features working mode name.

**Parts Counting mode screen**

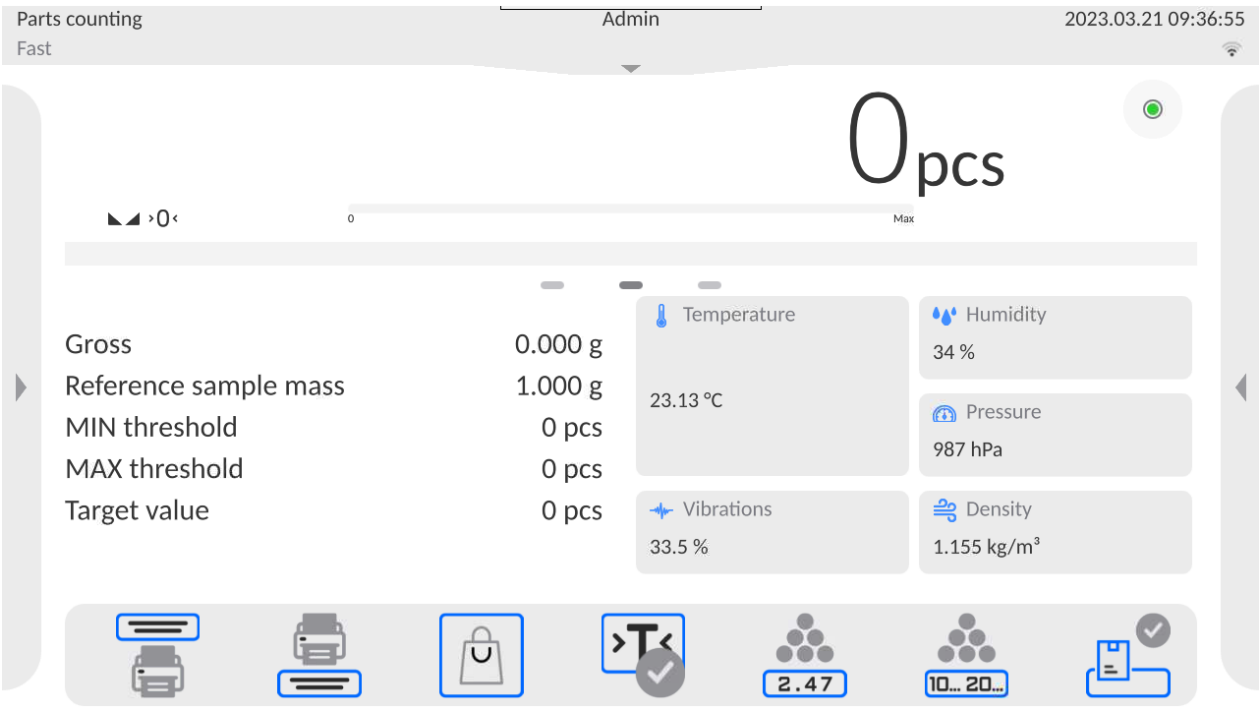


## 14.1. Mode Related Settings

The supplementary settings enable you to adjust the working mode to your needs and requirements.

**Procedure:**

1. Slide out the menu on the left, the available options are displayed.
2. Select <Settings> parameter. A list of functions related to Parts Counting mode is displayed:

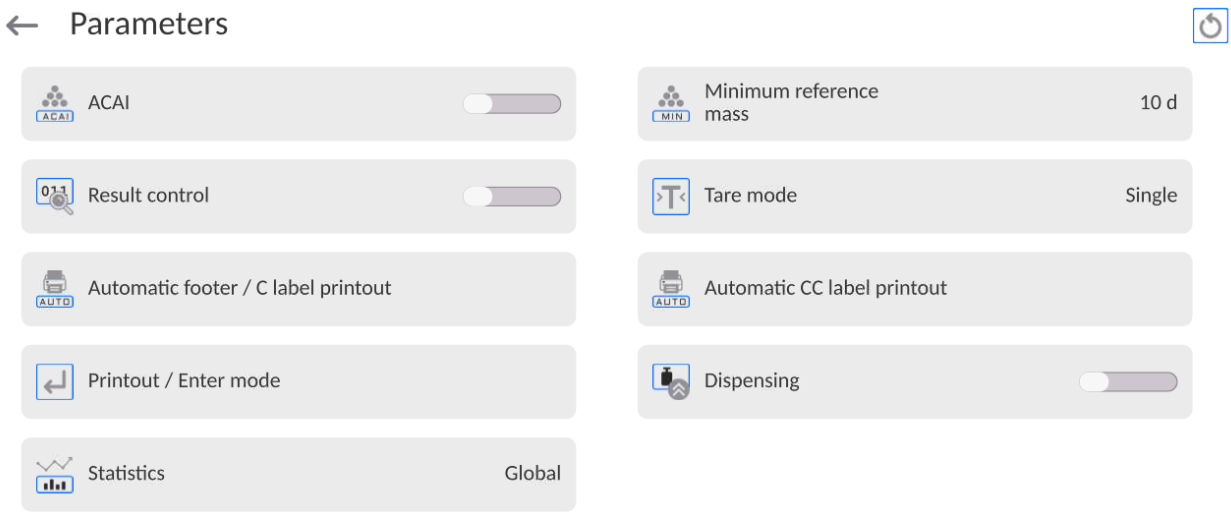


**Functions:**

- **ACAI**, Automatic Accuracy Correction
  - YES, weight value of a single piece to be updated.
  - NO, weight value of a single piece not to be updated.

Means of operation of ACAI function:

1. pieces quantity upon adding must increase,
2. pieces quantity upon adding cannot increase more than twice,
3. pieces quantity upon adding must be comprised within ± 0.3 tolerance of the total value.
4. the weighing result must be stable.

- **Minimum Reference Sample Mass** 1 unit, 2 units, 5 units, 10 units; minimum mass value of a single piece. If this condition is not met, the counting process will not start.

- **Result control**:
  - **None**, set to print and save all measurements
  - **Block**, set to print and save only those measurements which are comprised within the Lo and Hi thresholds.

- **Other functions in <Settings> parameter**
  To find out more about the remaining functions, refer to section 13.6 of this user manual, *Additional Parameters for a Weighing Process.*

### 14.2. Parts Counting – Quick Access Buttons

Each working mode features automatically displayed set of default on-screen quick access buttons. The set can be modified, i.e. you can add out-of-list quick access buttons to it. Such operation requires particular permission level.
You can add special buttons enabling quick access to the function of determination of a single piece mass, where the single piece mass is determined on the basis of the reference mass, given for a particular quantity of pieces:

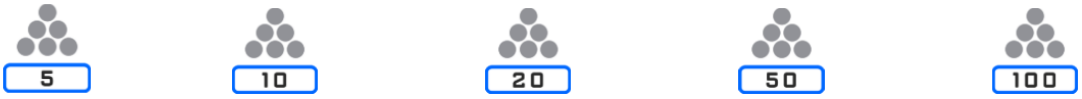

### 14.3. Setting Reference Sample Mass by Entering Mass of a Single Part

**Procedure:**

- Press <2.47 Set part mass> button, <Reference sample mass> edit box featuring an on-screen keyboard is displayed.
- Enter respective value and press button for confirmation, <Parts counting> mode is run with automatically set mass of a single part.

***Caution:***
*If the value of entered single part mass is lower than 0.1 of the reading unit, then the following message is displayed:* ***<Value too low>****.*

### 14.4. Setting Reference Sample Mass by Determining Mass of a Single Part

**Procedure:**

- Put the container on a weighing pan and tare it.
- Press button (Determine part mass), <Reference sample quantity> edit box featuring an on-screen keyboard is displayed.
- Enter respective value and press button to confirm. The following message is displayed: **<Number of parts to be loaded: xx>** (where **xx** – previously entered value).
- Load the weighing pan with the declared amount of parts. When the indication is stable (pictogram is displayed), press button to confirm the mass.
- Single part mass is calculated automatically, <Parts counting> working mode is run and the weighing device displays quantity of single parts (**pcs**).

***Caution:***
*Remember:*

- *Total weight value of all parts loaded onto the weighing pan cannot be greater than the max capacity.*
- *Total weight value of all parts loaded onto the weighing pan cannot be lower than the value determined by* ***<Minimum reference sample mass>*** *parameter. Unless this condition is met, the weighing instrument displays a message:* ***<Sample mass too low>.***
- *Single part mass value* ***must be equal to or greater than 0.1*** of the reading unit*. Unless this condition is met, the weighing instrument displays a message:* ***<Single part mass*** too low*>.*

### 14.5. Setting Reference Sample Mass by Acquiring Mass of a Single Part from the Database

Each product recorded in the database of products features a set of information which allows identifying it. Among the information there is weight value used during part counting process.

**Procedure:**
Enter <Parts counting> mode and press <Products database> button, next select given product from the list.
**Entering reference sample mass to the balance memory**
Procedure for entering single part mass to the products database:

1. Press <Setup> button, next press <Databases> entry and select Products database.

2. Press <Products> button.
3. Press respective product name and modify <Mass> field, [5].
4. Go back to <Parts counting> mode.

Procedure for entering single part mass to products database when there is no data entered yet:

a) Press <Setup> button, next press <Databases> entry and select Products database.
b) Press < Add> button.
c) Fill in all product-related fields and modify <Mass> field, [5].
d) Go back to <Parts counting> mode.

### 14.6. Single Part Mass Update in the Database

Determined single part mass can be assigned to a product in the database of products. This option is applied while using ACAI (Automatic Accuracy Correction) function in order to determine part mass with high accuracy.

**Procedure:**

1. Determine single part mass.
2. Press <Products> database.
3. Press and hold the name of a product for which the mass value is to be updated.
4. Context menu opens.
5. Press **<Assign reference sample mass>** button, reference sample mass for the product is recorded as **<Mass>**.

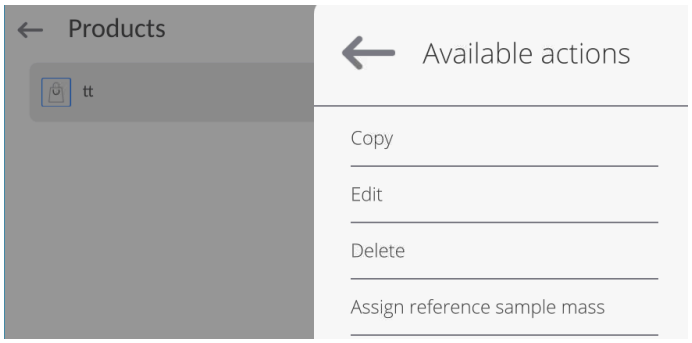


### 14.7. Parts Counting Procedure

First, it is necessary to obtain weight value of a single piece. Select one of the available options:

- Enter the weight value for a single part (section 14.3); next, put parts to be counted on the weighing pan. Parts quantity is displayed.
- Determine mass of a single part from a given quantity of parts (section 14.4.). ACAI function pictogram is displayed (providing that the function is active). Next, put parts to be counted on the weighing pan. Parts quantity is displayed.
- Acquire weight value for a single part from the database (section 14.5). To do it, you have to select respective product. Now put parts to be counted on the weighing pan, parts quantity is displayed.

***Caution:*** *It is necessary to tare any additional elements (packaging) prior to counting process start.*

### 14.8. Checkweighing for Parts Counting Mode

Parts counting process can be aided by checkweighing function, i.e. control whether indication is within the set thresholds.
Checkweighing requires setting values for two thresholds:

- Min threshold [Min= … pcs.]
- Max threshold [Max= … pcs.]

and setting YES value for a Bar graph. The Bar graph displays relation: CURRENT PARTS QUANTITY/CHECKWEIGHING THRESHOLDS.
In order to define Min and Max thresholds' values, open Products database and edit the Product record or use <Checkweighing thresholds> quick access button.

**Procedure:**

- Click drop-down menu, select <Information> entry.
- For the bar graph, set one of the following options <YES, ZOOM, CHECKWEIGHING THRESHOLD SIGNALLING or FAST WEIGHING>, go back to part counting function.
- Click side-left menu, press <Buttons> entry.
- Assign one of the on-screen buttons with <Checkweighing thresholds> option.
- Go back to part counting function.
- Press <Checkweighing thresholds> button and enter value for MIN threshold and MAX threshold, go back to part counting function.
- A bar graph is displayed under the weighing result, the bar graph shows the current state of counted pieces via colours:

**<u>For <LINEAR and ZOOM></u>**

**Operation description:**
The bar graph reflects weighing range in a linear way.

Additionally the bar graph signalls MIN, MAX thresholds if these had been declared:

- Signalling of mass below the set MIN value:

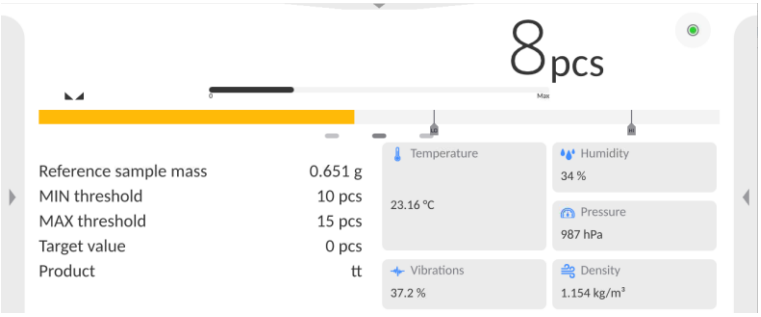


- Signalling of mass between the set MIN, MAX values:

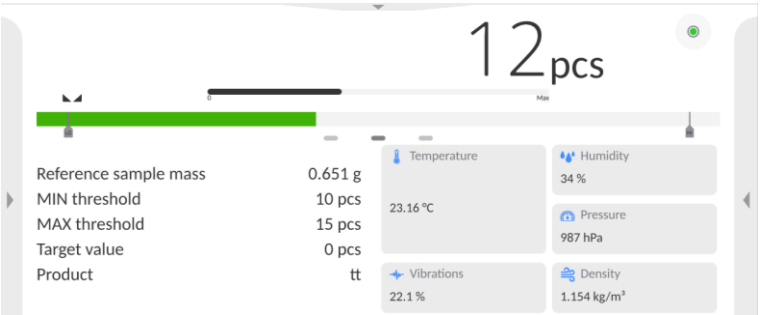

- Signaling of mass above the set MAX threshold:

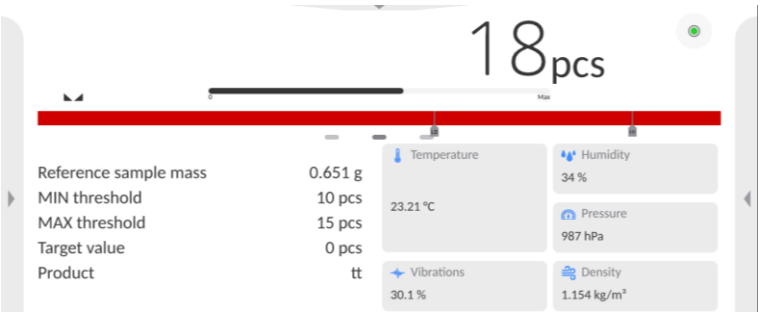


## <u>For <CHECKWEIGHING THRESHOLD SIGNALLING></u>

**Operation description:**

- The bar graph consists of: 1 yellow field, 1 green field, 1 red field.
- **Extreme left – yellow –** this field informs that value of mass loaded onto the weighing pan is lower than the value of min weighing threshold (**Min**).

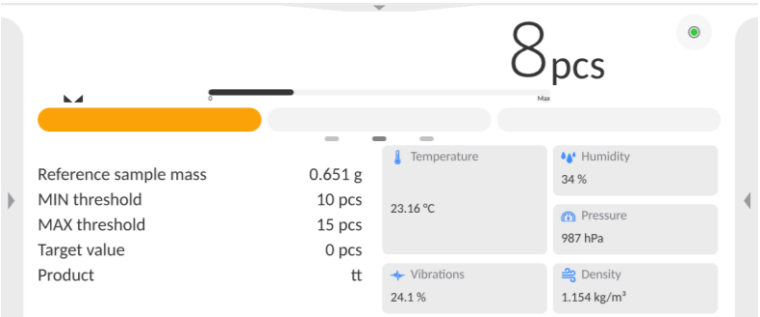


- **Centre – green –** this field informs that value of mass loaded onto the weighing pan is higher than the value of min weighing threshold and lower than the value of max weighing threshold (**OK**).

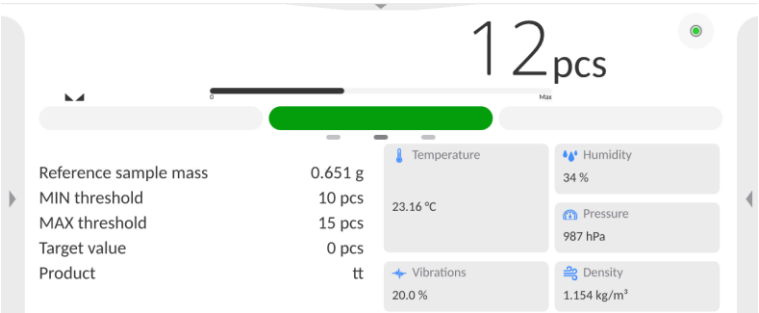


- **Extreme right – red –** this field informs that value of mass loaded onto the weighing pan is higher than the value of max weighing threshold (**Max**).

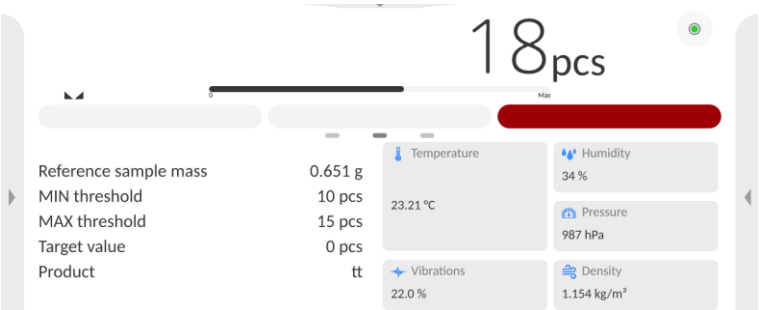

## For <FAST WEIGHING>

**Operation description:**

- The bar graph consists of 8 red fields and 3 green fields.
- The green fields signal weighings with values comprised between MIN and MAX thresholds, where:

  **MIN** = the set min threshold of correct weighing LO.
  **MAX** = the set max threshold of correct weighing HI.

- If the measurement value falls above the MIN value (up to 1/3 of MIN – MAX range), then green rectangle along with green arrow-shaped field on the left light up.
  If the measurement value falls between 1/3 and 2/3 of the MIN – MAX range, then green rectangle lights up.
  If the measurement value falls between 2/3 of MIN – MAX and MAX, then green rectangle along with green arrow-shaped field on the right light up.

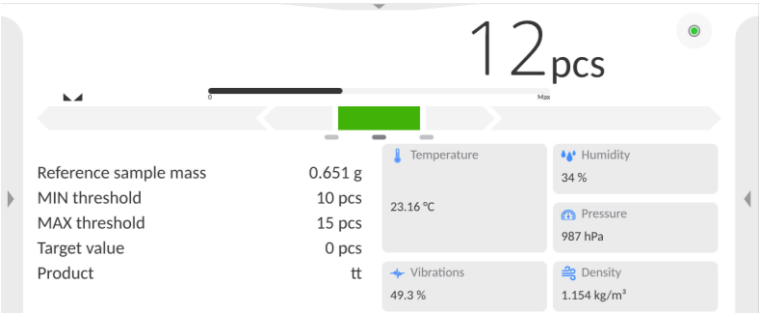


- If the measurement value falls below the MIN value, then red arrow-shaped field on the left light up. The lower the weight value, the more red arrow-shaped fields are lit.

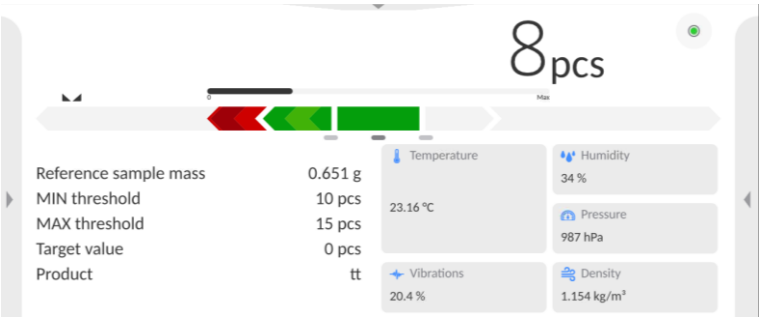


- If the measurement value falls above the MAX value, then red arrow-shaped field on the right light up. The lower the weight value, the more red arrow-shaped fields are lit.

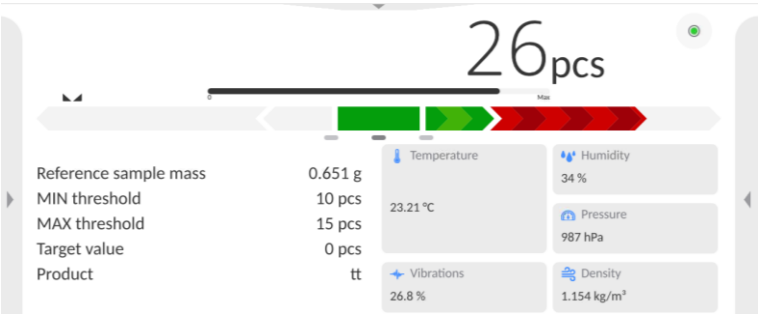


MIN and MAX values fall between extreme green fields and neighbouring red fields.

### 14.9. Dosing in Parts Counting Mode

Parts counting process can be aided by dosing function, i.e. control whether indication does not exceed the set target value.
Dosing requires setting a target value, e.g. 100 parts, and a tolerance in %. The bar graph displays the target value as a bracket. In order to define target mass value, press <Target value> quick access button.

**Procedure:**

- Slide out the menu on the left, next select <Information> parameter.
- Set Bar graph to YES value, return to parts counting mode.
- Slide out the menu on the left, next select <Buttons> parameter.
- Assign <Target value> parameter to one of the quick access buttons.
- Return to parts counting mode.
- Press < Target Value> button and enter the quantity of parts to obtain.
- If the tolerance option is used, determine the tolerance value (0 – 100%).
- Bar graph is displayed. It provides the following information:
  - current parts quantity on the weighing pan (colour signalling – see section 14.7.),
  - target mass value (black marker).

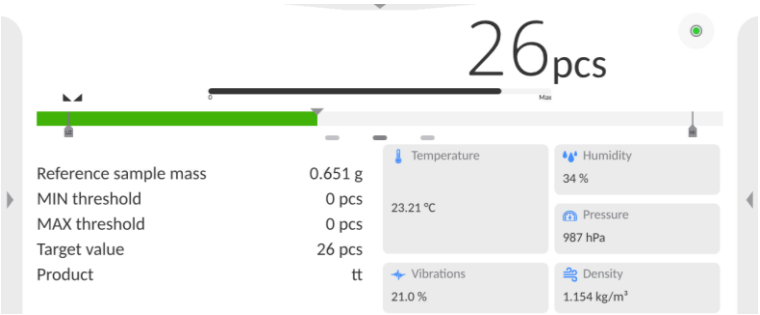


***Caution:*** *The checkweighing and dosing functions can operate simultaneously in the parts counting mode. In such a case, the dosing tolerance is controlled by Min and Max thresholds of the checkweighing function.*

# 15. CHECKWEIGHING

**<Checkweighing>** is a working mode using two thresholds (Min and Max) for control of samples weight. Usually, the weight is considered to be correct if it is comprised within threshold values.

**Checkweighing mode screen**

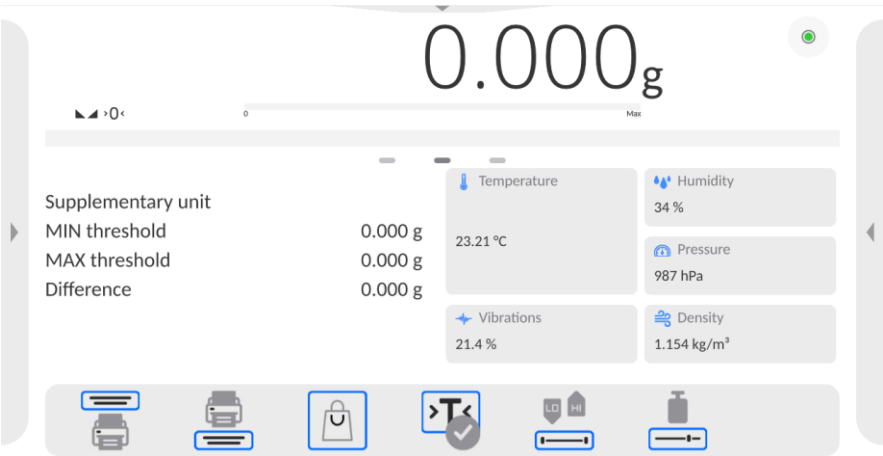


## 15.1. Making Use of Checkweighing Thresholds

There are two methods for making use of the checkweighing thresholds:

- selecting Product with Min and Max threshold declared,
- entering numeric value for the thresholds, <>; in this case, the thresholds do not refer to any product.

**Procedure 1** – selecting product from Products Database:

- Press button (Product database), list of products is displayed.
- Select the product that is to be weighed.
- Threshold values are displayed automatically within an Info field.
- Bar graph is displayed, its colour corresponds to the current status of mass:
  - yellow: mass value lower than Min threshold value,
  - green: mass value higher than Min threshold value and lower than Max threshold value,
  - red: mass value higher than Max threshold value.

**Procedure 2** – entering checkweighing thresholds manually:

- Press button (Checkweighing thresholds).
- Press Min threshold button and enter its value.
- Press button to confirm.
- Press Max threshold button and enter its value.
- Press button to confirm.

***Caution:*** *Max threshold value has to be greater than Min threshold value.*

### 15.2. Mode Related Settings

- **Result control**:
  - **None**, set to print and save all measurements
  - **Block**, set to print and save only those measurements which are comprised within the Lo and Hi thresholds.

- **Dispensing**:
  Weighing in a 'loading' mode (weighing in '-'). After placing the entire load on the weighing pan, tarring the mass and loading particular portions of the load with simultaneous recording of weighing, weighing records with values of masses of measured portions will be saved in the base.

To find out more about the remaining functions, refer to section 13.6 of this user manual, *Additional Parameters for a Weighing Process*.

## 16. DOSING

**<** **Dosing>** is a working mode that facilitates dispensing process, wherein the dispensing takes as long as it is necessary to obtain a pre-defined target weight.

**Dosing mode screen:**

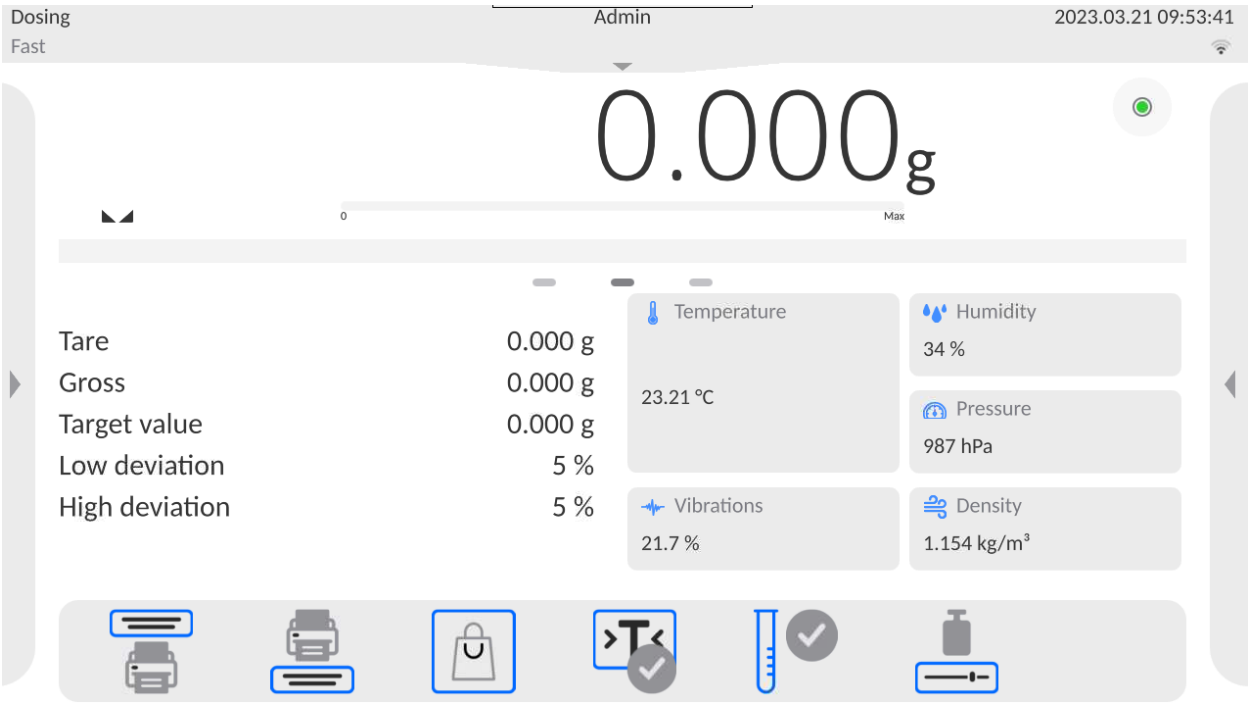

## 16.1. Making Use of Products Database in the Course of Dosing Operation

You can use target value assigned to a product or values recorded in the Products Database. Additionally, it is possible to define temporary target values. In the case of the Product Database, the target value is the value entered in the mass field.

**Procedure 1** – selecting product from Products Database:

- Press button (Product database), a list of products is displayed.
- Select product that be weighed.
- Target and tolerance values are displayed automatically within the Info field.
- Target value is displayed with minus sign.

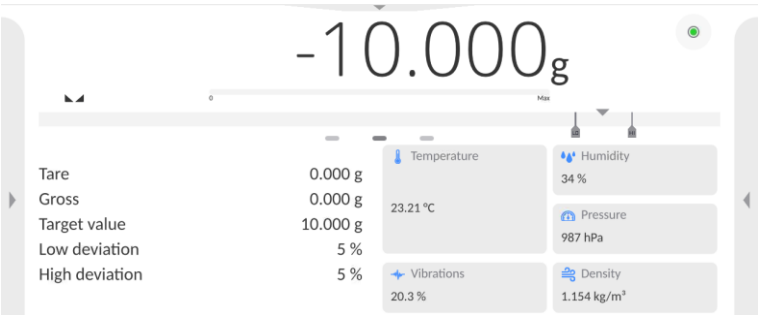


- Bar graph is displayed, its colour corresponds to the current mass status :
  - yellow: mass value lower than 'target value - tolerance value',
  - green: mass value within permissible tolerance range: 'target value +/- tolerance'
  - red: mass value greater than 'target value + tolerance value'.

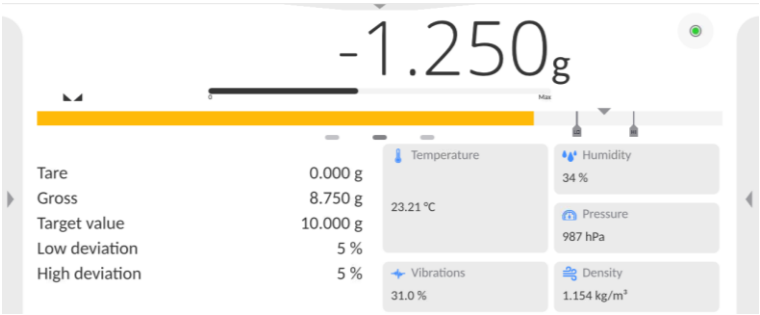


**Procedure 2** – entering checkweighing thresholds manually:

- Press <Target value> button.
- Window for entering the target value and tolerance is displayed, enter the values.
- Return to weighing.

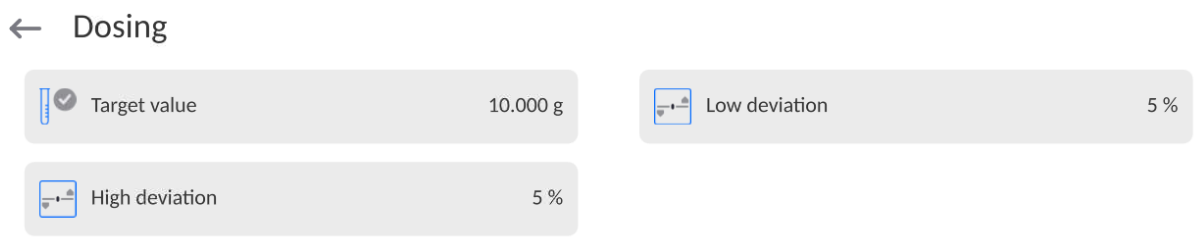


***Caution:*** *For a product acquired from the Products Database, the Target Value and Tolerance data are already given. The data can be edited and modified.*

### 16.2. Mode Related Settings

- **Result control**:
  - **None**, set to print and save all measurements
  - **Block**, set to print and save only those measurements which are comprised within the Lo and Hi thresholds.

To find out more about the remaining functions, refer to section 13.6 of this user manual, *Additional Parameters for a Weighing Process.*

## 17. PERCENT WEIGHING AGAINST REFERENCE SAMPLE MASS

<**Percent weighing**> is a working mode for comparison of the measured sample's weight with the reference mass. The result is expressed in [%].
PERCENT WEIGHING can be aided by DOSING and CHECKWEIGHING. Mind that these are not started automatically, neither is the bar graph.

**Percent Weighing mode screen:**

### 17.1. Sample Mass and Reference Sample Mass Comparison

Comparison methods:

- Entering reference mass, to do it, press <Set reference mass> button.
- Accepting mass of a load on the weighing pan as a reference mass; to do it press button (Set as 100%).
- selecting a product from the products database for which the mass parameter has been determined; to do it, press button (Products database).

**Procedure 1** – entering reference mass manually

- Press button (Set reference mass).
- Enter the reference mass value and press button to confirm.
- The mass of weighed products is compared to the reference mass, the difference is displayed in [%].

**Procedure 2** – accepting mass of a load on the weighing pan as a reference mass

- Load the weighing pan with the sample, wait for a stable indication.
- Press button (Set as 100%).
- 100.000% indication is displayed, weight of the product on the weighing pan is accepted as the reference mass; it is automatically recorded and displayed in the reference mass field.
- Unload the weighing pan.
- From now on, the mass of weighed products is compared to the reference mass, the difference is displayed in [%].

**Procedure 3** – selecting product from the Products Database:

- Press button (Products database). Select product to be weighed.
- Info field automatically displays modified information concerning reference mass.
- Product-related reference mass is automatically recorded and displayed in the reference mass field. Press button to open the reference mass field.
- 0.00 % indication is displayed (for unloaded pan).
- From now on, the mass of weighed products is compared to the reference mass, the difference is displayed in [%].

## 17.2. Checkweighing and Dosing in Percent Weighing Mode

PERCENT WEIGHING can be aided by DOSING and CHECKWEIGHING. In order to make them accessible, assign them to an on-screen button.

Remember to provide percent values for both of the functions.

**Procedure:**

1. Slide out the menu on the left.
2. The following submenus are displayed: Settings, Buttons, Information, Printouts, Profile.
3. Select <Buttons> menu.
4. A list of on-screen buttons, function buttons and proximity sensors is displayed.
5. Press the selected element and assign a button to it.

**CHECKWEIGHING**

Checkweighing facilitates control of sample mass; mind that Min and Max thresholds, given in [%], are required.

**Procedure:**

1. Press button (Checkweighing thresholds).
2. Press Min threshold button and enter its value [%].
3. Press button to confirm.
4. Press Max threshold button and enter its value [%].
5. Press button to confirm.

***Caution:*** *Max threshold value has to be greater than Min threshold value.*

**DOSING**

Dosing function requires the target value to be specified (in [%]) along with the dosing tolerance, i.e. permissible +/- surplus or shortfall.

**Procedure:**

1. Press button (Target value).
2. Enter the target value in [%].
3. Set tolerance value, if required.
4. Press button to confirm.
5. Press Min threshold button and enter its value [%].
6. Press button to confirm.

### 17.3. Bar Graph

The DOSING and CHECKWEIGHING functions are aided by a graphic indication, i.e. a bar graph. An example of simultaneous operation of DOSING and CHECKWEIGHING functions is presented below.

- <Checkweighing thresholds> settings: Min = 90%, Max = 110%.
- reference mass = 2.500 g <>.

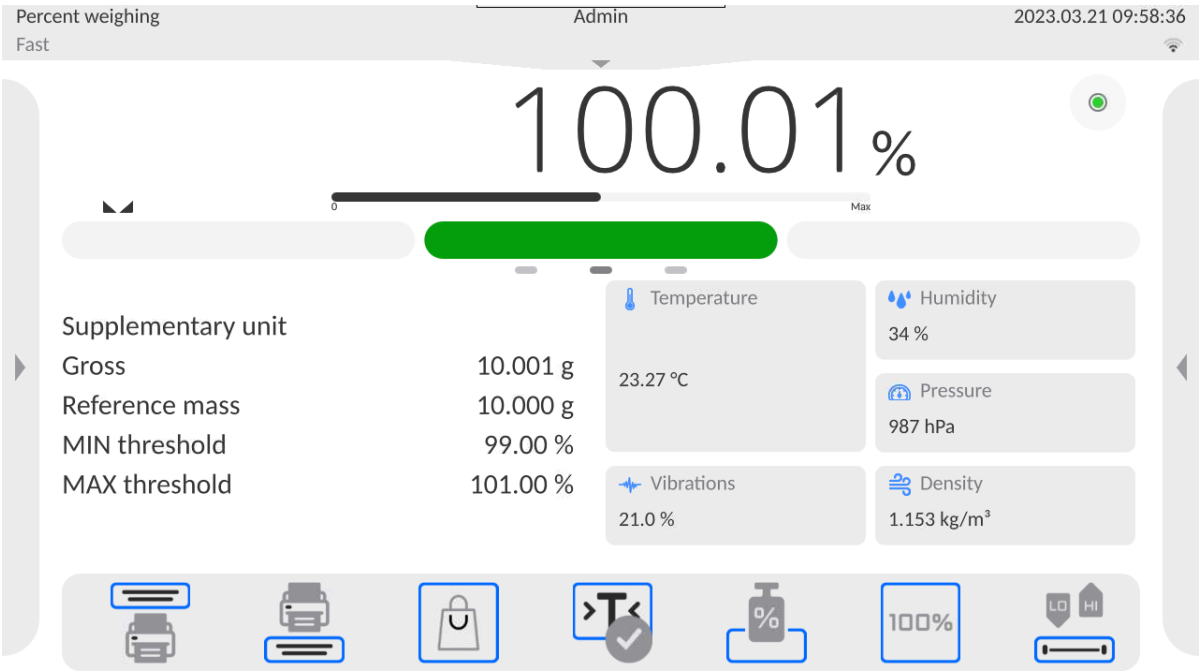

### 17.4. Mode Related Settings

- **Result control**:
  - **None**, set to print and save all measurements
  - **Block**, set to print and save only those measurements which are comprised within the Lo and Hi thresholds.

To find out more about the remaining functions, refer to section 13.6 of this user manual, *Additional Parameters for a Weighing Process.*

## 18. DENSITY

**<Density>** is a working mode for determining the density of: solids, liquids, air (available for XA 5Y), various substances using pycnometer.
In order to operate this mode, a density determination kit (supplementary equipment) is required.
**Density mode screen**

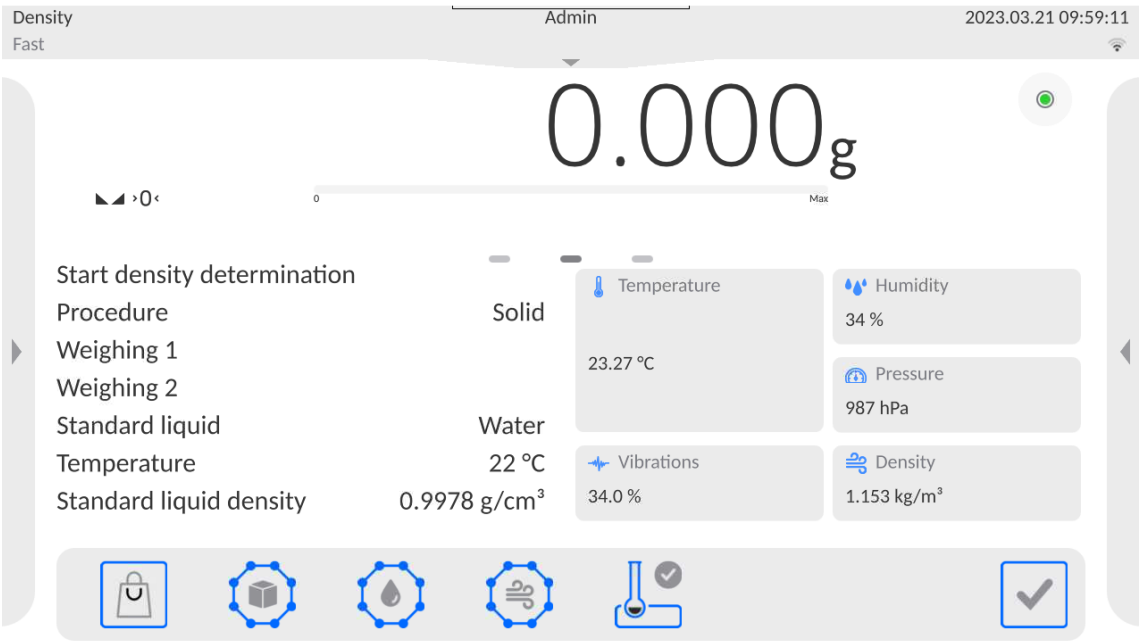

## 18.1. Density Determination Kit

Kit intended for XA balances:

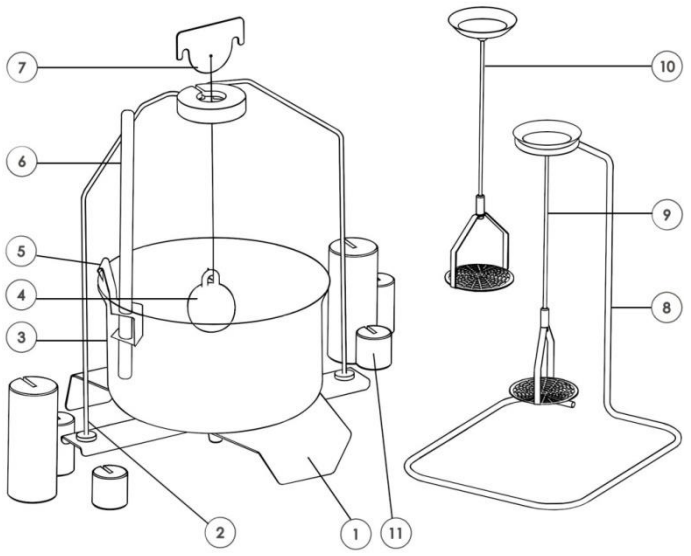


| | |
|---|---|
| **1** | Beaker base |
| **2** | Stand |
| **3** | Beaker |
| **4** | Sinker |
| **5** | Thermometer holder |
| **6** | Thermometer |
| **7** | Hanger |
| **8** | Additional stand for a set of pans or a sinker |
| **9** | Weighing pan for solids density determination |
| **10** | Weighing pan for density determination of solids with density lower that density of water |
| **11** | Weights |

***Caution:***

- *Components of density determination kit shall be stored in a respective box.*
- *Weighing pans and sinker must not be put directly on a table, this might cause their damage. Weighing pans and sinker, if not in use, must be put on an additional stand.*

## 18.2. Assembly

| **XA balances** | |
|---|---|
| 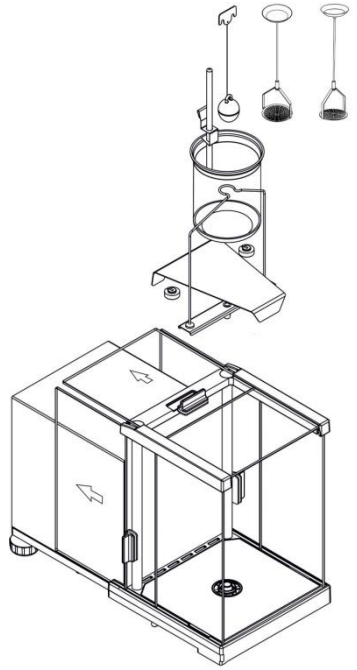 | ***Caution:***<br>*If the kit has been installed and -NULL- message is displayed, load the balance with weight set (12) and zero or tare the indication. Thus prepared balance can be used for density determination.* |

### 18.3. Solid Body Density Determination

Prior to the procedure start, it is necessary to set process-related parameters:

- Liquid type:
  - Distilled water
  - Ethanol
  - Other liquid with determined density
- Liquid temperature
  (required if either distilled water or ethanol is used)
- Liquids Density
  The parameter is set automatically after the temperature has been entered, if either distilled water or ethanol is used as liquid. In the case of using liquid other than distilled water or ethanol, it is necessary to enter its density manually.

The density of solids is calculated using the following formula:

$$\rho = \frac{A}{A-B}\rho_o$$

ρ - density of a sample
A - sample mass measured in the air
B - sample mass measured in liquid
$\rho_o$ - liquid density

**Procedure:**

1. Install the density determination kit.
2. In order to record density value for a particular product in the products database, go to <Settings> menu, set <Assign density to product> parameter and press <Product> quick access button to make the product active.
3. Press <Density of solids> button.
4. Respective menu is displayed, use it to set the following parameters: Standard liquid, Temperature, Standard liquid density.
5. Press <START> button.
6. Density determination begins.
7. Load the TOP density kit pan with a sample, wait for a stable measurement result and press <> button.
8. Load the BOTTOM density kit pan (immersed in liquid) with a sample, wait for a stable measurement result and press <> button.
9. Density result is displayed.
10. Press <> button to complete the procedure.

***Caution:***

*Press <> button to start a new density determination process with the same settings.*

### 18.4. Liquid Density Determination

In order to determine the density of a liquid, first determine sinker's density in the air, next in the liquid. The density of the liquid is calculated using the following formula:

$$\rho = \frac{A - B}{V} + d$$

ρ - density of liquid
A - sinker mass measured in the air
B - sinker mass measured in water
V - sinker volume
d - air density (max 0.001 g/cm$^3$)

Install the density determination kit and enter the sinker volume to the balance memory.

- Press <Liquid density> button.
- A respective menu is displayed, press <Sinker's volume> button and enter sinker's volume value, take it from the sinker's hanger.
- Density determination begins.

**Procedure:**

1. Install density determination kit.
2. In order to record density value for a particular product in the products database, go to <Settings> menu, set <Assign density to product> parameter and press <Product> quick access button to make the product active.
3. Press <START> button.
4. Follow the displayed commands.
5. Carry out measurement in the air, wait for a stable measurement result and press <> button.
6. Carry out measurement in the tested liquid, wait for a stable measurement result and press <> button.
7. Density result is displayed.
8. Press <> button to complete the procedure.

***Caution:***

*Press > button to start a new density determination process with the same settings.*

### 18.5. Air Density

<> Air density value is one of numerous data required for calculation of measurement result correction, which correction is an effect air BUOYANCY compensation. Another value required for the calculation is weighed sample density. The function of air density determination is enabled only in balances with reading unit lower than d=1mg.
Determining density of air requires use of a dedicated set of mass standards (additional equipment), specific for a given balance model.

**Procedure:**

1. Press <Air density> button.
2. Menu of Air Density function is displayed.
3. Press field for entering weight value of steel mass standard, enter the value as provided in the calibration certificate.
4. Press field for entering weight value of aluminium mass standard, enter the value as provided in its calibration certificate.
5. Press field for entering density value of steel mass standard, enter the value.
6. Press field for entering density value of aluminium mass standard, enter the value.
7. Press START field, air density determination begins.
8. Load the pan with steel mass standard, wait for a stable measurement result and press <> button.
9. Load the pan with aluminium mass standard, wait for a stable measurement result and press <> button.
10. Density result is displayed.
11. Press <> button to complete the procedure.

The value of determined air density is automatically assigned to <Air density> parameter in <Settings/ Air buoyancy compensation> menu for weighing working mode.

### 18.6. Determining Density Using Pycnometer

Prior to the procedure start, it is necessary to set process-related parameters:

- Pycnometer weight (if pycnometer weight is known, the measurement is carried out once when the pycnometer is filled with substance).
- Pycnometer volume.

The density of solids is calculated using the following formula:

$$\rho = \frac{A}{A-B}\rho_o$$

ρ - density of a sample
A - sample mass measured in the air
B - sample mass measured in liquid
$\rho_o$ - liquid density

**Procedure 1 – when the pycnometer weight has been entered**

1. In order to record density value for a particular product in the products database, go to <Settings> menu, set <Assign density to product> parameter and press <Product> quick access button to make the product active.
2. Press <Pycnometer> button.
3. Respective menu is displayed, using it set the following parameters: pycnometer weight, pycnometer volume.
4. Press <START> button.
5. Process of density determination begins.
6. Fill in the pycnometer with tested substance, follow the pycnometer guidelines.
7. Load the pan with the pycnometer, wait for a stable measurement result and press <> button.

8. Density result is displayed.
9. Press <> button to complete the procedure.

***Caution:***

*Press <> button to start a new density determination process with the same settings.*

**Procedure 2 – when pycnometer weight has not been entered**

1. In order to record density value for a particular product in the products database, go to <Settings> menu, set <Assign density to product> parameter and press <Product> quick access button to make the product active.
2. Press < Pycnometer> button.
3. Respective menu is displayed, using it set the following parameters: Pycnometer volume.
4. Press < START> button.
5. Process of density determination begins.
6. Load the pan with the pycnometer, wait for a stable measurement result and press <> button.
7. Take the pycnometer off the pan, fill it with tested substance, follow the pycnometer guidelines.
8. Load the pan with a pycnometer containing the substance, wait for a stable measurement result and press <> button.
9. Density result is displayed.
10. Press <> button to complete the procedure.

***Caution:***

*Press <> button to start a new density determination process with the same settings.*

### 18.7. Mode Related Settings

The supplementary settings enable you to adjust the working mode to your needs and requirements.

- **Request sample number -** available options:
  **NO** - sample number not required; single measurement.
  **YES** - sample number required; series of measurements.
  Measuring unit: [g/cm$^3$], [kg/m$^3$], [g/l]; selected unit is valid for all density determining options and for final indication printouts.
- Assign density to a product: YES/NO; YES - the software automatically assigns the value of determined density of solid or liquid to the <Density> parameter in a product record of the database of products. To use this function, first select a product for which the density procedure is carried out. Next, start density determination (if the density has already been determined for this product, it is replaced with the new value).
- Tare mode
- Printout/Enter mode
- Printout

To find out more about the remaining functions, refer to section 12.5 of this user manual, *Additional Parameters for a Weighing Process*.

### 18.8. Printouts

Printouts option enables you to determine content of a particular standard printout, and to define a non-standard printout.

- **Standard printout** comprises four internal blocks, each containing different variables. Variable settings: YES - print; NO - do not print.

Settings for header, GLP and footer printouts are to be found in section 12.5. For density printout template, read below.
You can design content of a report for each of carried out procedures. Upon pressing <Density printout template> parameter, a window is opened where you can set content of a particular report.

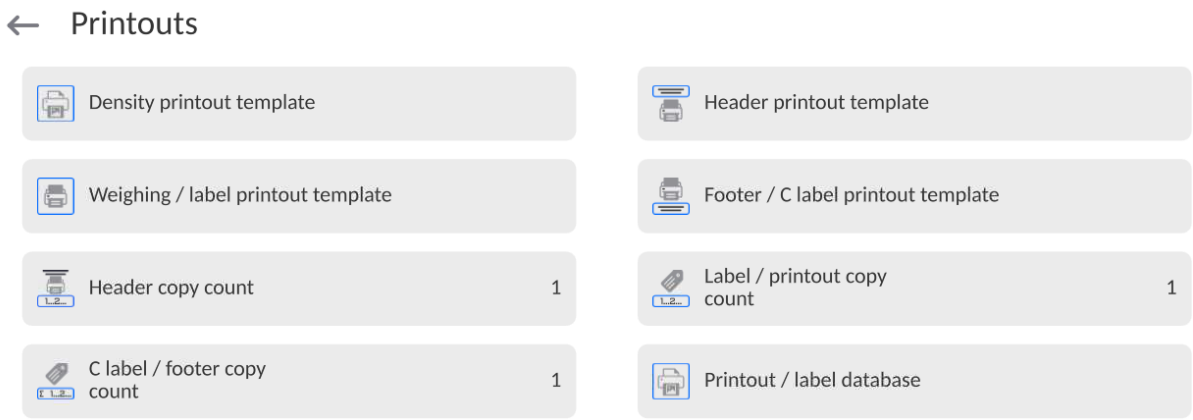


Particular reports content:

| ***SOLID*** | ***LIQUID*** | ***AIR*** | ***PYCNOMETER*** |
|---|---|---|---|
| – Working mode<br>– Procedure<br>– Sample no.<br>– Operator<br>– Balance type<br>– Balance S/N<br>– Date<br>– Time<br>– Reference liquid<br>– Temperature<br>– Reference liquid density<br>– Weighing 1<br>– Weighing 2<br>– Density<br>– Volume<br>– Product<br>– Warehouse<br>– Customer<br>– Empty line<br>– Dashes<br>– Signature<br>– Non-standard printout | – Working mode<br>– Procedure<br>– Sample no.<br>– Operator<br>– Balance type<br>– Balance S/N<br>– Date<br>– Time<br>– Sinker volume<br>– Temperature<br>– Weighing 1<br>– Weighing 2<br>– Density<br>– Product<br>– Warehouse<br>– Customer<br>– Empty line<br>– Dashes<br>– Signature<br>Non-standard printout | – Working mode<br>– Procedure<br>– Sample no.<br>– Operator<br>– Balance type<br>– Balance S/N<br>– Date<br>– Time<br>– Mass of steel standard<br>– Mass of aluminium standard<br>– Density of steel standard<br>– Density of aluminium standard<br>– Weighing 1<br>– Weighing 2<br>– Density<br>– Product<br>– Warehouse<br>– Customer<br>– Empty line<br>– Dashes<br>– Signature<br>– Non-standard printout | – Working mode<br>– Procedure<br>– Sample no.<br>– Operator<br>– Balance type<br>– Balance S/N<br>– Date<br>– Time<br>– Pycnometer mass<br>– Pycnometer volume<br>– Weighing 1<br>– Weighing 2<br>– Density<br>– Product<br>– Warehouse<br>– Customer<br>– Empty line<br>– Dashes<br>– Signature<br>Non-standard printout |

### 18.9. Performed Density Determinations Report

Upon completed density determination processes (solid body, liquid, air), a report is generated. The report is saved to <**Density reports>** database. The files are named by the date and time (hour) of the density determination performance.

An example of solid density determination report:

*---------- Density ----------*
*---------- Solid body ----------*

| | |
|---|---|
| *Operator Admin* | |
| *Balance S/N* | *400015* |
| *Date* | *2011.10.07* |
| *Time* | *10:08:09* |
| *Standard liquid* | *Water* |
| *Temperature* | *22 °C* |
| *Density of standard liquid* | *0.9978 g/cm$^3$* |
| *Weighing 1* | *10.526 g* |
| *Weighing 2* | *2.586 g* |
| *Density* | *1.322776 g/cm$^3$* |

*----------*
*Signature*

## 19. ANIMAL WEIGHING

<Animal weighing> is a working mode allowing reliable determination of mass of weighed objects in motion. In principle, this type of objects generate unstable measurement, thus it requires using a different filtering method of measurement signal.

**Animal weighing mode screen:**

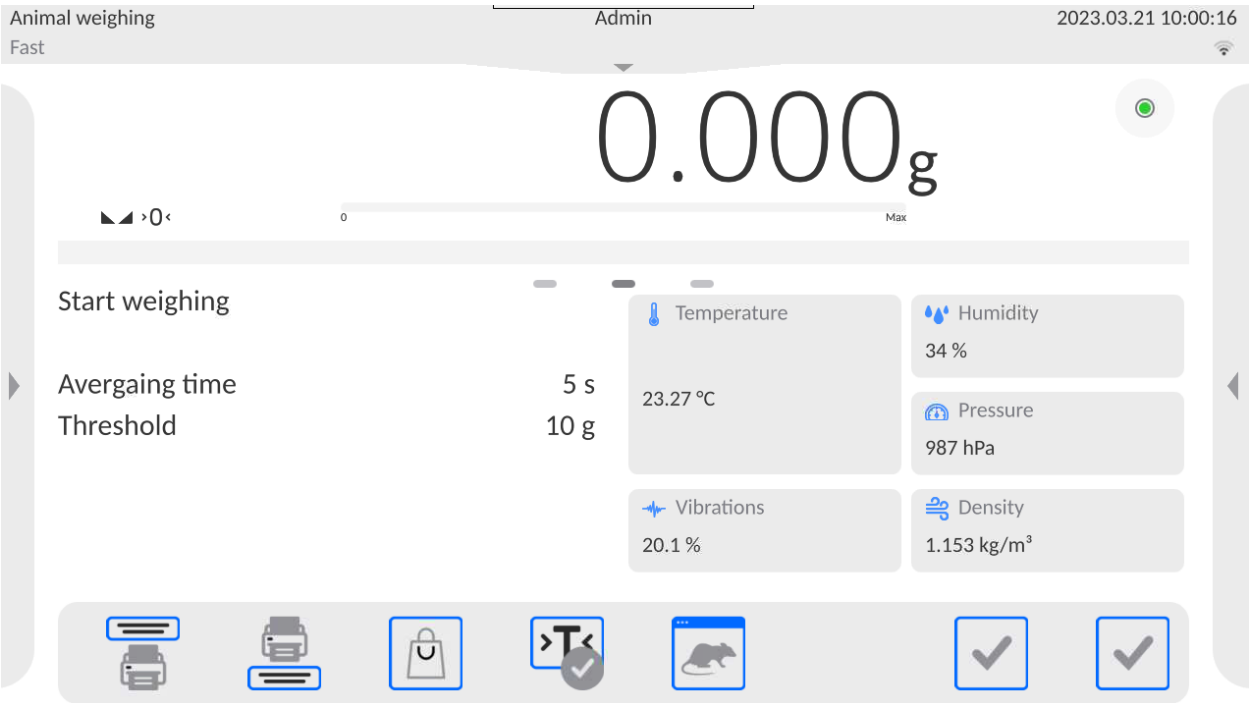

### 19.1. Animal Weighing Settings

Animal Weighing parameters must be set with regard to selected mass analysis method.

**Procedure:**

1. Press <Animal weighing> button.
2. List of Animal Weighing parameters is displayed:
   - Averaging time
     Time interval within which measurements are analysed. Obtained data is used for calculation of measurement result.
   - Automatic operation
   - Parameter determining whether the measurement is to be carried out manually (on pressing a key), or automatically. The measurement starts automatically if the indication on the balance display exceeds the value of a set threshold. Measurement of the next object begins after removing one object from the weighing pan (the indication is below the threshold value) and loading the pan with the next object at the moment when the indication exceeds the set threshold value.
   - Threshold
   - Value expressed in mass units. In order to trigger the measurement, the indicated value has to be greater than the threshold value.
3. Set parameters and return to weighing.
4. Load the weighing pan with an object to be weighed, press <> button.
5. “Freezed” measurement result is displayed.
6. In order to proceed to the next measurement, press <> button:
   - in the case of manual operation, press <> button.
   - in the case of automatic operation, unload the weighing pan and load it with a new object to be weighed.

### 19.2. Mode Related Settings

- **Result control**:
  - **None**, set to print and save all measurements
  - **Block**, set to print and save only those measurements which are comprised within the Lo and Hi thresholds.

To find out more about the remaining functions, refer to section 13.6 of this user manual, *Additional Parameters for a Weighing Process.*

# 20. FORMULATIONS

<**Formulations**> is a working mode allowing you to prepare a multi-ingredient mixture. The whole process is carried out automatically.
While making mixtures, you can:

- **use formulations database** which stores formulations; the program helps you dispense particular amount of formulation ingredients, this is done by means of respective on-screen messages.
- make mixture on your own, without using formulations database; with this option you control dispensed ingredients, their sequence and quantity by yourself.

If you want to use the formulations database, first you have to create a recipe (make a formulation), next apply it. In order to create a recipe, you have to enter <Formulations> database. For detailed procedure informing you how to create a formulation, read later sections of this user manual.

**Formulations mode screen:**

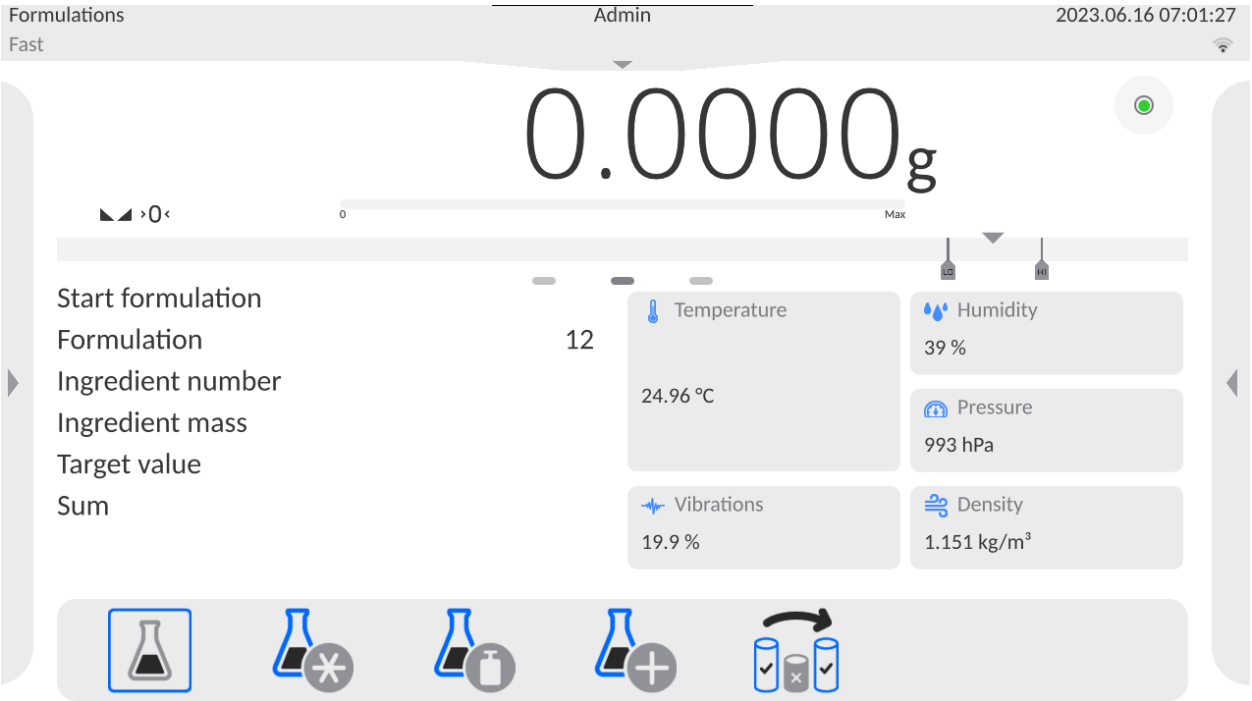


## 20.1. Mode Related Settings

The supplementary settings enable you to adjust the working mode to your needs and requirements. To access the settings, follow the below procedure.

**Procedure:**

1. Slide out the menu on the left.
2. The following submenus are displayed: Settings, Buttons, Information, Printouts, Profile.
3. Select <Settings> menu.
4. Functions related to formulations are displayed.

**Formulations mode settings:**

- **Automatic ingredients naming**:
  - YES
  - NO
- **Apply tare from database**:
  - YES - each ingredient has a tare value assigned (the value is assigned on the basis of data for a particular product saved to the products database);
  - NO - tare is not applied.
- **Means of ingredient verification**:
  Use this function to specify how to determine the ingredient mass during formulation making process, by **TOLERANCE or by THRESHOLDS**.
  **TOLERANCE**: the software accepts mass of an ingredient as correct if it is within the set percent tolerance of the total ingredient's mass (±%) - (data acquired from the database of products).
  **THRESHOLDS**: the software accepts mass of an ingredient as correct if it is within the set thresholds (data acquired from the database of products).
  The specified method is in effect for all ingredients in the formulation making process.
  If during formulation making process, one of the ingredients is weighed in excess (its mass is out of the high tolerance limit) the following message is displayed upon ingredient weight confirmation: <VALUE OUT OF RANGE. RECALCULATE THE FORMULATION?>. Confirm. The software automatically recalculates mass of other ingredients so that the mixture proportions are correct.
  In order to make THRESHOLDS option active, the product/ingredient-related data in the database must correspond with the value selected for <MEANS OF INGREDIENT VERIFICATION> parameter, e.g. ingredient thresholds are specified and <THRESHOLDS> value is set for <MEANS OF INGREDIENT VERIFICATION> parameter, otherwise, particular ingredients mass recalculation is not possible, for example when ingredient thresholds are specified and <TOLERANCE> value is set.
- **Multiplier's editing**:
  Function designed to enable making multiple mixtures according to a selected formulation in a single weighing process:
  - **YES** - upon selecting a formulation for processing the software requests for multiplier's value, the provided value is in effect for all ingredients in the formulation making process, i.e. each ingredient is multiplied by the value.
  - **NO** - multiplier value is disabled; the default value is set to <1>.
- **Ingredient control**:
  Forced confirmation by reading the EAN code for each weighing of subsequent ingredient in the formula.
- **Cycles quantity**:
  Setting the number of formula cycles, that is specification of the number of repetitions of the entire formula.

### 20.2. Formulations – Quick Access Buttons

Each working mode features automatically displayed set of default on-screen quick access buttons. The set can be modified, i.e. you can add out-of-list quick access buttons to it. Such operation requires particular permission level.

### 20.3. Adding Formulation to the Formulations Database

Formulation database contains formulations names, ingredients names and their weight. Each product used for the formulation making process is saved to the database of products. When preparing a formulation, first name it, next add ingredients. The software is intuitive, and you are guided by means of respective messages. Make sure you know the complete recipe, as it is necessary to specify the name and weight of each ingredient. Formulations database menu has been designed to enable adding formulations.

**Procedure:**

- Enter <Databases> submenu and press <Formulations> button.
- Press <Add> button, do it to add a new formulation.

A new record is automatically added to the database, it is opened in an editing mode. Enter necessary data.
List of parameters defined for a formulation:

1. Name: click name button, new window opens, enter formulation name.
2. Code: click code button, enter code number.
3. Ingredients: click ingredients button;a list of formulation ingredients is displayed (for a new formulation, the list is empty), add the ingredients:
   - Press <Add> button.
   - Select one of available options:
     **<New ingredient>** - select to add a new product; first enter name, next specify mass to be weighed during formulation making process. The software automatically adds the products to the products database.
     ***Caution:***
     *In order to enter remaining product data, it is necessary to go to the products database.*
     **<New ingredient from database>** - select to view a list of database-stored products; choose the product you need for your mixture, the software weighs as much product/ingredient as specified by the mass parameter in the products database.
     Mass value can be edited and modified for each added product. The introduced modifications do not affect mass value saved to the database.
4. Ingredients quantity: parameter disabled for editing, updated by the software upon adding of an ingredient to a formulation.
5. Sum: target mass of a formulation, i.e. sum of all formulation ingredients, parameter disabled for editing, updated by the software upon adding of an ingredient to a formulation.

### 20.4. Using Formulations in Weighing

Upon running FORMULATIONS mode, you can prepare the mixture either manually or by selecting a formulation from the database.
Mixture preparation options:

- formulation not recorded in the Formulations Database – manual preparation,
- formulation recorded in the Formulations Database,
- formulation recorded in the Formulations Database – using multiplier function,
- formulation recorded in the Formulations Database – determining target mass of the complete formulation.

***Caution:***
*In order to use the above options, it is necessary to add respective quick access buttons to the bottom bar and set parameters of the formulations mode.*

Select a formulation, weigh each of its ingredients. Wait for the indication to stabilize and press <> button. Weight of each ingredient is tared upon pressing <> button; i.e. it is accepted for the total mass of the formulation.

Press button to cancel all operations regarding formulation making process. Now, you can prepare a different formulation.

**Procedure 1** – formulation not recorded in the Formulation Database – manual preparation. Follow the displayed prompts.

- Go to the quick access bar and press button (Start).
- Name the formulation.
- Select ingredients for a formulation.
- Select the first ingredient (new or from the database of products).
- The home screen is displayed.
- Load the weighing pan with a container for the weighed product, wait for a stable measurement indication, tare the balance.
- Dispense specified amount of the ingredient.
- Press <> button to confirm.
- Select the next ingredient.
- Repeat the steps for remaining mixture ingredients.
- With all the ingredients weighed, select one of the following options: - <Save and finish> - select to save the process to formulations database, the process is finished automatically, the final report is recorded in the formulations database. - <Finish> - select to complete without saving the process to the formulations database; the process is finished automatically, the final report is recorded in the formulations database.
- Upon completion, the formulations home screen is displayed, message <Completed> is visible in the bottom bar. To proceed, press <> button.

  ***Caution:***
  *It is possible to abort formulation making process at any moment. To abort the process, press button.*

**Procedure 2** – formulation recorded in the Formulations Database. Basic recipe-making process. Procedure 2 allows you to prepare mixture multiplicity easily.
Follow the displayed prompts.

- Press <> button (Formulation).
- List of Formulations is displayed, select the formulation that is to be carried out.
- Press <> button (Formulation with multiplier).
  If <Multiplier's editing> option is disabled (set to <NO> value), the software automatically skips to the formulation making process. If the <Multiplier's editing> option is enabled (set to <YES> value), the software displays a window with an on-screen keyboard for inserting the multiplier value. Mass of all formulation ingredients is multiplied by the specified value (mass of each ingredient is a product of mass saved to a formulation and multiplier value).

- Confirm entered multiplier value, formulation making process starts automatically. The following parameters are displayed: selected formulation name, the first ingredient name, ingredient number, mass to be weighed and target mass.
- Load the weighing pan with a container for a weighed product, wait for a stable measurement indication, tare the balance.
- Dispense specified amount of the ingredient.
- Confirm ingredient mass value; the software automatically adds the mass to the sum of weighed formulation ingredients, the next ingredient weighing begins.
- With all formulation ingredients weighed, a report on completed process is printed and saved to the reports database (report template is editable; to edit a report template go to <Printouts> parameter), message <Completed> is visible in the bottom bar. To proceed, press <> button.

**Procedure 3** – formulation recorded in the Formulation Database – using multiplier function.
This procedure is useful when you need to prepare a mixture of mass different from the total mass (previously saved to the database) of used ingredients. In such a case, there is no need for you to carry out complex calculations of ingredients' mass. The software adjusts mass of each ingredient in relation to the pre-defined target mass of the complete formulation.

Follow the displayed prompts.

- Press <> button (Formulation).
- List of Formulations is displayed, select the formulation that is to be carried out.
- Press <> button (Formulation with target mass).
- Window with an on-screen keyboard for entering target mass of a mixture is displayed.
- Confirm entered multiplier value; formulation making process starts automatically. The following parameters are displayed: selected formulation name, the first ingredient name, ingredient number, mass to be weighed and target mass. Mass of each ingredient is automatically recalculated (proportionally) to the value of the defined target mass of the complete formulation.
- Load the weighing pan with a container for a weighed product, wait for a stable measurement indication, tare the balance.
- Dispense specified amount of the ingredient.
- Confirm ingredient mass value, the software automatically adds the mass to the sum of weighed formulation ingredients; the next ingredient weighing begins.
- With all formulation ingredients weighed, a report on completed process is printed and saved to the reports database (report template is editable, to edit a report template, go to <Printouts> parameter), message <Completed> is visible in the bottom bar. To proceed, press <> button.

In order to print the report on completed formulation making processes, enter the Formulation Reports database.

## 20.5. Printouts

Printouts option enables determining content of a particular standard printout, and to define non-standard printout.

- **Standard printout** comprises four internal blocks, each containing different variables. Variable settings: YES - print; NO - do not print.

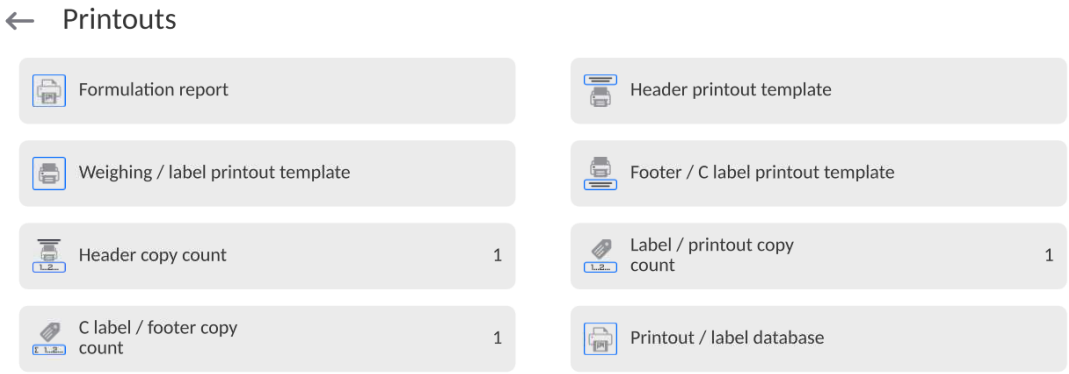


Settings for header, GLP and footer printouts are specified in section 12.5. For settings of formulation report, read below. You can design the report content.

***Caution:***
*In order to specify which measurement data is to be printed on a report, it is necessary to modify settings for <Weighing printout template> parameter. To enable particular measurement data printout, set it to <YES> value. Upon each completed formulation process, the program generates a report. The report is saved to<**Formulation reports**> database. Report files are named by date and time of the formulation process performance.*

| *Particular reports content:* | *Example of a report* |
|---|---|
| – Working mode<br>– Operator<br>– Customer<br>– Warehouse<br>– Formulation<br>– Formulation code<br>– Start date<br>– End date<br>– Ingredient quantity<br>– Measurement quantity<br>– Measurements<br>– Target value<br>– Sum<br>– Formulation difference<br>– Status<br>– Empty line<br>– Dashes<br>– Signature<br>– Non-standard printout | *---------- Formulation Report ----------*<br>*Operator Nowak Jan*<br>*Formulation name Mixture 1*<br><br>*Start date 2011.12.16 13:21:40*<br>*End date 2011.12.16 13:22:28*<br><br>*Ingredients quantity 5*<br>*Completed measurements quantity 5*<br><br>*---------- Measurement 1 ----------*<br>*19.994 g*<br>*---------- Measurement 2 ----------*<br>*49.993 g*<br>*---------- Measurement 3 ----------*<br>*9.999 g*<br>*---------- Measurement 4 ----------*<br>*1.001 g*<br>*---------- Measurement 5 ----------*<br>*19.995 g*<br><br>*Total mass 100.982*<br>*Target mass 101.000*<br>*Difference -0.018*<br><br>*Status OK*<br>*----------*<br>*Signature*<br>*.....* |

# 21. STATISTICS

<Statistics> is a working mode that enables acquiring data from a series of measurements, and to produce statistics using the acquired data. Settings of this function determine which data are displayed.

**Statistics mode screen**

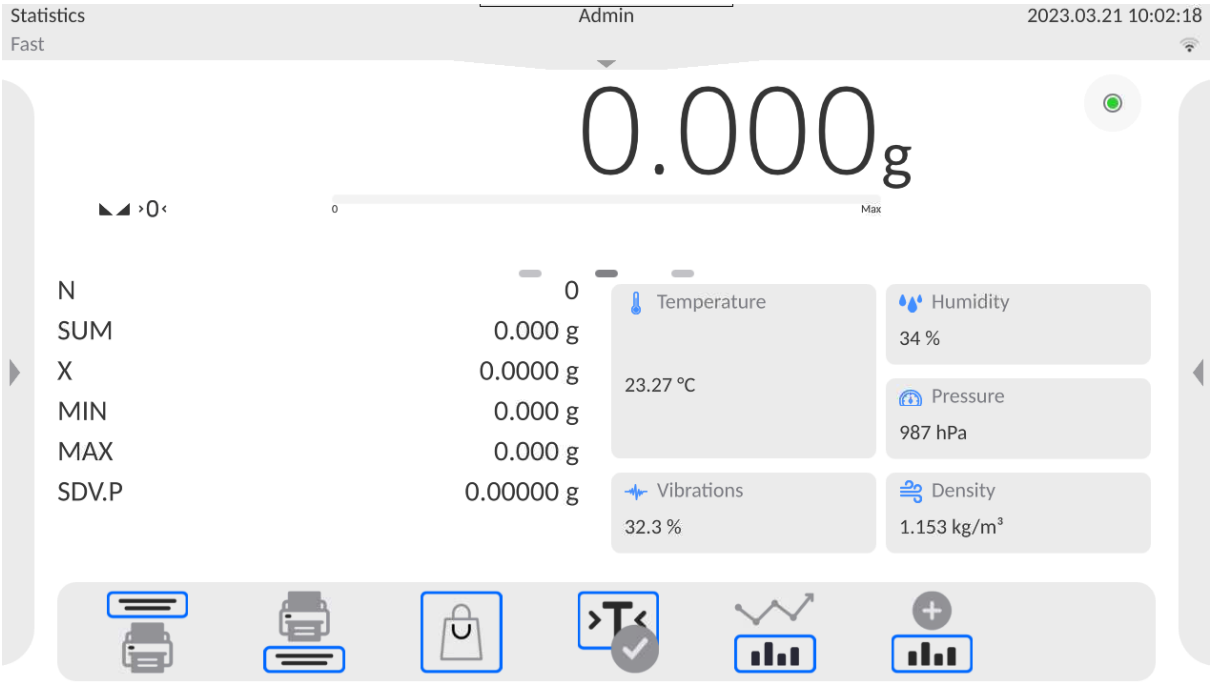


## 21.1. Buttons and Information Settings

Buttons crucial for series of measurement:

- <PRINT> - press to trigger printout and to add measurement to statistics,
- <Add to statistics> - press to add measurement to statistics, printout is not triggered.

You can define your own set of default keys and information that is to be displayed in the Info field.

## 21.2. Additional Settings for Statistics

– **Result control**:
  - **None**, set to print and save all measurements
  - **Block**, set to print and save only those measurements which are comprised within the Lo and Hi thresholds.

To find out more about the remaining functions, refer to section 13.6 of this user manual, *Additional Parameters for a Weighing Process.*

### 21.3. Measurement Series Parameters

For each series of measurements it is possible to overview the results, print a report, delete results of all statistics.

**Procedure:**

1. Press <[icon] button (Statistics).
2. The following options are displayed: Result, Print, Delete last, Delete, Measurements graph, Probability distribution graph.
3. Select one of available options:
   - **Result** – to preview statistics report,
   - **Print** – to print a report,

Example of a report:

---------- Statistics----------

| | |
|---|---|
| N | 9 |
| SUM | 455.600 g |
| X | 50.6222 g |
| MIN | 49.939 g |
| MAX | 51.380 g |
| D | 1.441 g |
| SDVP | 0.39605 g |
| SDVS | 0.38505 g |
| RDVP | 0.78 % |
| RDVS | 0.76 % |

---

| | |
|---|---|
| $SDVP = \sqrt{\frac{\sum_{i=1}^{n}(X_i - \bar{X})^2}{n}}$ | $SDVS = \sqrt{\frac{\sum_{i=1}^{n}(X_i - \bar{X})^2}{n-1}}$ |
| Where:<br>**SDV.P – population standard deviation**<br>$\bar{X}$ – measurement mean<br>$X_i$ – subsequent measurement<br>n – measurement quantity | Where:<br>**SDV.S – sample standard deviation**<br>$\bar{X}$ – measurement mean<br>$X_i$ – subsequent measurement<br>n – measurement quantity |
| $RDVP = \frac{SDVP}{\bar{X}} * 100\%$ | $RDVS = \frac{SDVS}{\bar{X}} * 100\%$ |
| Where:<br>**RDV.P – population variation coefficient**<br>SDV.P – population standard deviation<br>$\bar{X}$ – measurement mean | Where:<br>**RDV.S – sample variation coefficient**<br>SDV.S – sample standard deviation<br>$\bar{X}$ – measurement mean |

   - **Delete last** – to cancel the last measurement,
   - **Delete** – to remove all statistics data,
   - **Measurements graph** – to make the software generate and display a graph with distribution of measurements in mass/measurement coordinates system for completed measurement series (see the graph below).

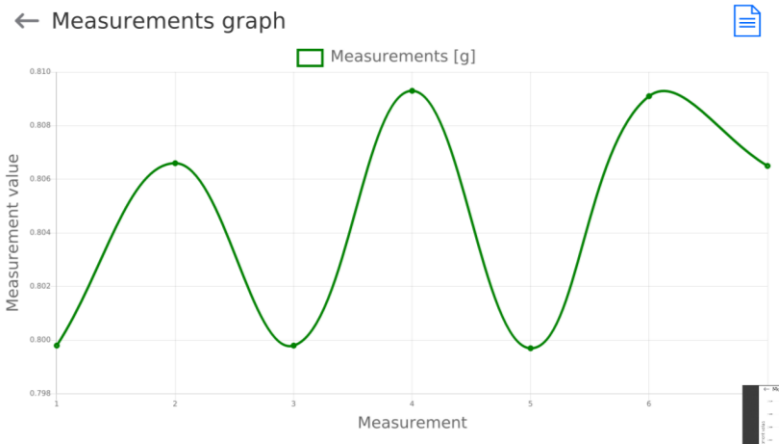


– **Probability distribution graph** – to make the software generate and display a graph of probability distribution for completed measurement series (see the graph below). The bar graph demonstrates number of identical results in a series.

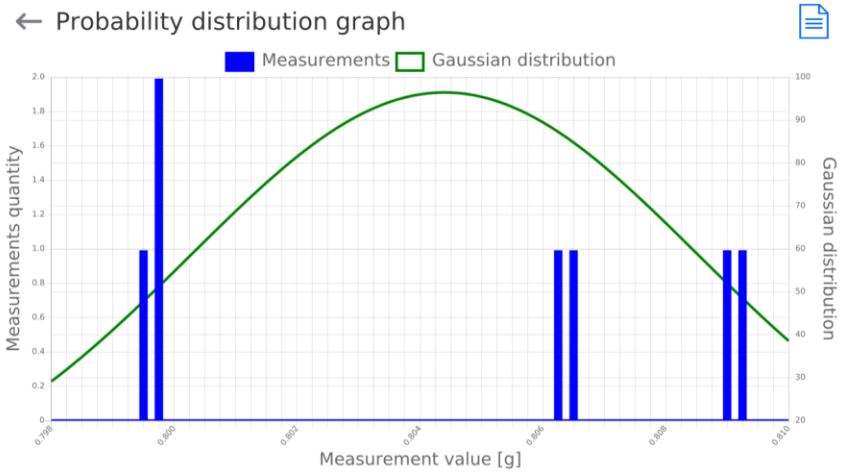


Graph buttons

| | |
|---|---|
| ← | Press to display the previous view. |

## 22. PIPETTE CALIBRATION

Balance enables pipette calibration using a dedicated program function or *PIPETTES* PC software (workstation for pipette calibration). Prior to the calibration start, it is necessary to install the set for pipette calibration inside the anti-draft chamber. The set does not come standard with the balance. The assembly procedure is presented below.

MYA 5Y balance with the set for pipette calibration.

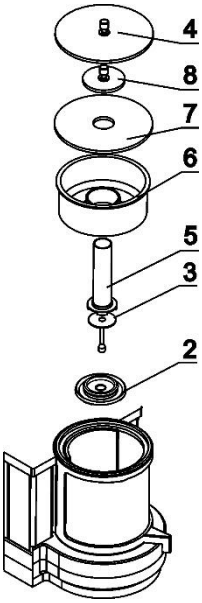


Steps:

- disassembly the standard weighing pan and the anti-draft shield,
- inside the chamber install:
    - draft shield (2)
    - weighing pan (3)
    - glass vessel (5)
    - evaporation ring (6)
    - glass lid (7)
    - supplementary lid (8)
    - or glass lid (4)

XA 5Y balance with a set for pipettes calibration:

| Set A | Set B | Set C | Steps: |
|---|---|---|---|
| 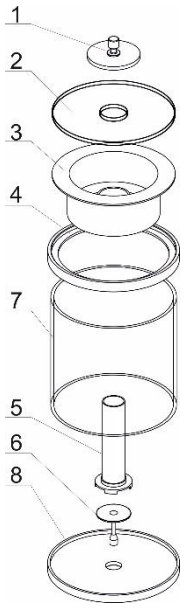 | 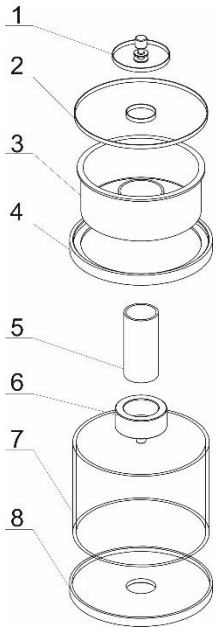 | 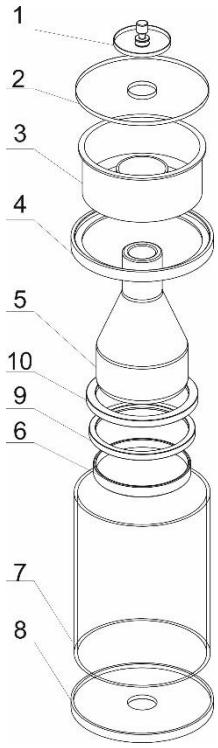 | • disassembly the standard weighing pan and the anti-draft shield,<br>• place centering ring (8) inside the chamber,<br>• put glass ring (7) onto the centering ring,<br>• place weighing pan (6) inside the glass ring,<br>• inside, place pipette calibration vessel (5), put it onto the weighing pan,<br>• if the vessel, used in set C, is too light, it is necessary to apply load ring (9) or (10) onto the weighing pan,<br>• put top ring (4) onto the glass ring,<br>• put evaporation ring (3) onto the top ring,<br>• put glass lid (2) onto the top ring,<br>• put glass lid (1) onto the glass lid (2). |

| | |
|---|---|
| 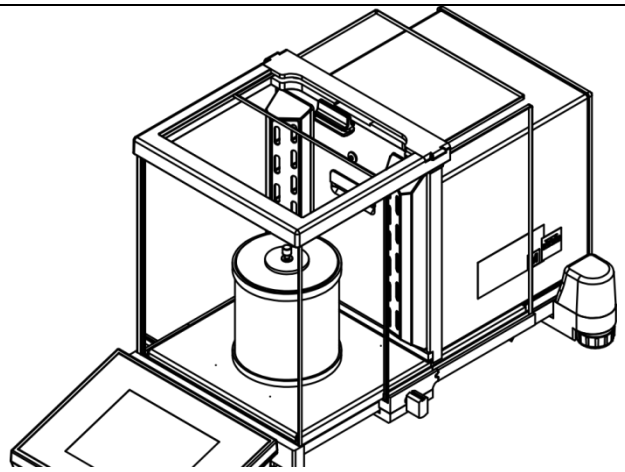 | The XA 5Y balance with pipette calibration set installed. |

The XA 5Y.M.A balance can be equipped with a chamber for pipette calibration featuring an automatically open lid.
Prior to operation, install the chamber. Take it out of the packaging and prepare it for assembly.

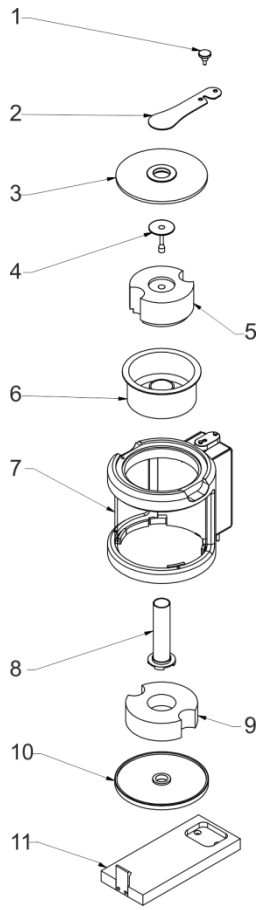


Steps:

- Undo protecting screw (1)
- Remove clamp (2)
- Remove glass lid (3)
- Remove weighing pan (4)
- Remove protective polyethylene foam insert (5)
- Remove evaporation ring (6)
- Disassemble base (11)
- Remove bottom ring (10)
- Remove bottom protective polyethylene foam insert (9)
- Remove glass vessel (8)

Prior to installation of the chamber, disassemble the glass draft shield, the panes and the top frame. The disassembly procedure is described in *MAINTENANCE ACTIVITIES* section. Now you can assemble the chamber for pipettes calibration.

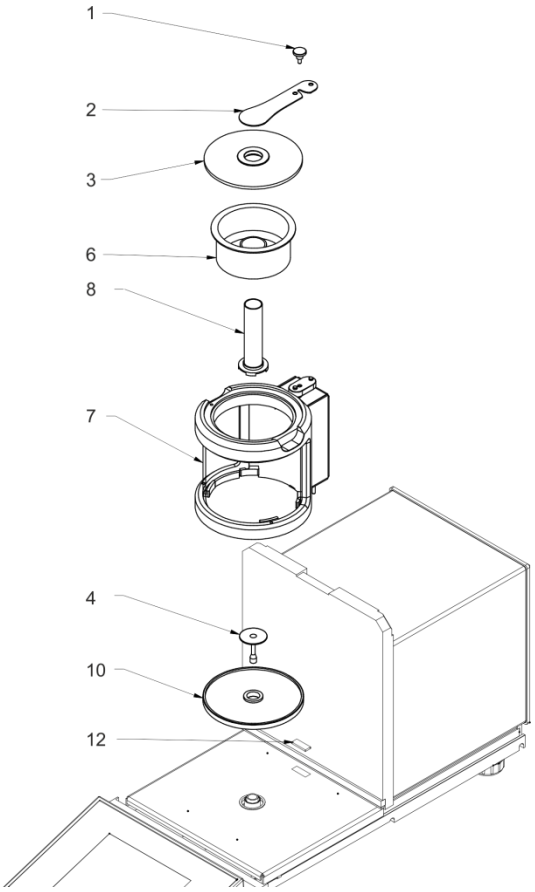


Steps:

- Disassemble chamber seat protection (12)
- Install bottom ring (10)
- Install weighing pan (4)
- Carefully apply the glass chamber connecting it to the connector located in balance base (7)
- Install glass vessel (8)
- Install evaporation ring (6), fill it with distilled water
- Apply glass lid (3)
- Apply clamp (2)
- Tighten protecting screw (1)

***Caution:*** *Be careful so as not to cause any damages to the balance mechanism.*

Evaporation ring minimizes measurement errors being a result of liquid evaporation occurring in the course of the weighing process.

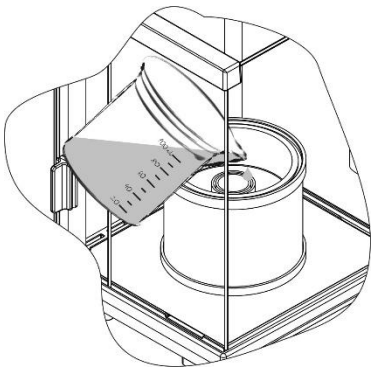

Prior to pipettes calibration, distilled water must be poured into the evaporation ring; the amount of water cannot exceed 2/3 of the ring height. The set may be operated after about an hour – this period of time is required for humidity stabilisation. Remember to control the level of distilled water – the surface of the vessel has to remain covered with it. Excess of water may be removed by means of an automatic aspirator or an external pipette.
In order to minimize both changes in moisture content inside the weighing chamber and negative effect of air blows during opening of the chamber door, the liquid has to be dosed by means of a pipette through an opening located in the top cover/lid of the weighing chamber. In the course of calibration, it is allowed to use a balance without an anti-draft chamber. For this purpose, remove the panes and the top frame. For panes disassembly instruction, read *MAINTENANCE ACTIVITIES* section; for frame disassembly, read below. In order to remove the frame, undo 4 screws fixing it to the housing (see the figure). Now you can install the pipette calibration set; follow the above instruction.

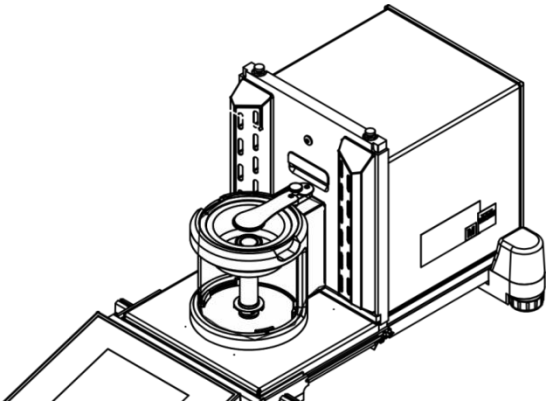

The XA 5Y.A balance with automatic chamber

Balance with disassembled anti-draft chamber and with installed calibration set.

Now pipette calibration can be carried out.

<Pipettes calibration> is a working mode allowing you to determine errors of measurement of piston pipettes volume. The errors can be determined either with reference to ISO 8655 standard or your own requirements.
In the case of a calibration carried out with reference to ISO 8655 standard, the errors are automatically selected for a particular volume, as specified in the standard (refer to: table of errors, ISO 8655 standard).
Pipette calibration mode enables:

- calibrating pipettes of fixed-volume or variable-volume, and single- or multi- channel pipettes.
- creating pipettes database providing the following information: pipette name, code, tested volume, etc.
- calculating results on the basis of:
  - average volume of a pipette (channel),
  - systematic error es (accuracy error),
  - random error CV (repeatability error),
- carrying out automated measuring procedures conditioned by pipette's type,
- storing calibration results in a database (in a form of reports on calibration process),
- printing reports on pipette calibration processes,
- exporting test reports.

During the procedure, the accuracy and repeatability errors are determined for the tested volume. In the case of pipettes with adjustable volume, the software enables declaring up to 5 volume values (from the total pipette's range) that are to be checked during the calibration process.
**Use only distilled water for pipette calibration.**

**Ambient conditions crucial for high-accuracy calibration:**

- The ambient temperature of the pipette, tip and liquid:
  20°C ÷ 25°C, during weighing it must be stabilized within ± 0.5.°C
- Relative humidity: 50 ÷ 75%.
- Pipette, tips and distilled water have to be subjected to temperature stabilization carried out directly in the weighing room. The standard recommends the acclimatization for at least 2 hours.

While calibrating pipettes, **use pipettes database** providing you with pipette-related data, parameters, tested volume, and error values determined for specific volumes.

Prior to pipette calibration process, enter pipettes database and provide pipette-related data and calibration criteria. In order to add a pipette, it is necessary to enter the database. For information on how to add a pipette to the pipettes database, read further down this user manual.

**Pipettes Calibration mode screen**

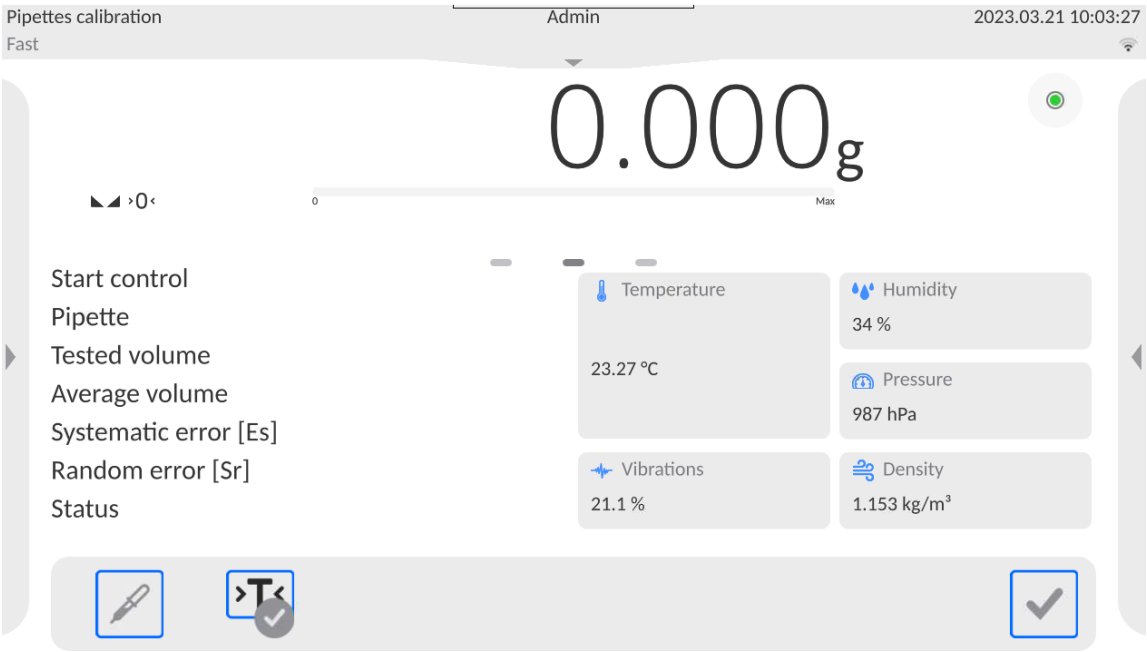


### 22.1. Mode Related Settings

The supplementary settings enable you to adjust the working mode to your needs and requirements. To access the settings, follow the below procedure.

**Procedure:**

1. Slide out the menu on the left.
2. The following submenus are displayed: Settings, Buttons, Information, Printouts, Profile.
3. Select <Settings> menu.
4. The display indicates functions related to pipette calibration process.

**Functions:**

- **Measurements quantity**: designed to enable determining measurements quantity for tested pipette volume (valid for each tested volume in the case of a pipette with adjustable volume),
- **Request serial number**: YES/NO. YES – a window with an on-screen keyboard is displayed; use it to enter serial number of a pipette.
- **Operation with adherence to ISO 8655**: YES/NO. YES – the software automatically takes error values accordant with recommendations of ISO 8655 standard (if other error values have been defined for a particular pipette, then on selecting <Operation with adherence to ISO 8655> parameter the specified error values are neglected and replaced by those from ISO standard).
- **Upload ambient conditions parameters from THB sensor**: YES/NO. YES – the software automatically acquires and saves ambient conditions from a connected THB

sensor at a right time. NO – you have to read ambient conditions (i.e. temperature, humidity and pressure) from external sensors and enter them manually both before and after calibration.

- **Result control, Tare mode, Automatic footer printout, Printout mode, Printout**: for information on how to operate these functions, read section *13.6*.

### 22.2. Pipettes Calibration – Quick Access Buttons

Each working mode features automatically displayed set of default on-screen quick access buttons. The set can be modified, i.e. you can add out-of-list quick access buttons to it. Such operation requires particular permission level.

While using automatic chamber for pipettes calibration you can control the opening for liquid dosing, this is done either via quick access buttons or proximity sensors:

| | |
|---|---|
| OPEN CLOSE | Change opening position. |
| OPEN | Uncover the opening. |
| CLOSE | Cover the opening. |

### 22.3. Adding a Pipette to Pipettes Database

Database of pipettes contains a list of pipette names and other data, including tested volumes and error values for a specific volume. When adding a pipette to the database, first specify its name, and then add remaining data.
The software is intuitive, and you are guided by means of respective messages. Pipettes database menu has been designed to enable adding formulations.

**Procedure:**

- Enter <Databases> submenu and press <Pipettes> button.
- Press < Add> button to add a new pipette.

A new record is automatically added to the database, it is opened in an editing mode. Enter respective data.

List of parameters defined for a pipette:

1. Name: press to enter pipette name.
2. Code: press to enter pipette code.
3. Model: press to enter model name.
4. Tip: press to enter tip name
5. Volume type: ADJUSTABLE/FIXED.
6. Nominal volume: pipette's nominal volume value.
7. Minimum volume: pipette's minimum volume value, for fixed-volume pipette enter <0>;
8. Channels quantity: specify number of pipette's channels, for a single channel pipette enter <1>;
9. Type: NONE/A/D1/D2. Pipette type adheres to standard guidelines. In the case of calibration carried out with reference to ISO 8655 standard, the errors are automatically selected for a particular volume. Determining pipette type is crucial.

10. Tested volumes: press “Tested volumes” field, a window with a list of calibrated volumes opens (in the case of a new pipette, the list is empty), add volume to be tested, and define error value for each tested volume:

**Procedure:**

- Press <Add> button.
- An on-screen keyboard is displayed.
- Enter tested volume value in [µl] and press < > button to confirm,
- A new record is automatically added, the record features recommended error values.
- In order to change error values, press a field with pipette volume

- each field can be edited; you can enter error values of your choice.

***Caution:*** *During calibration, the order of tested volumes corresponds to the order in which they are entered.*

- Upon setting correct values, return to the home screen.

## 22.4. Printouts

Printouts option enables you to determine content of a particular standard printout, and to define non-standard printout.

- **Standard printout** comprises four internal blocks, each containing different variables. Variable settings: YES - print; NO - do not print.

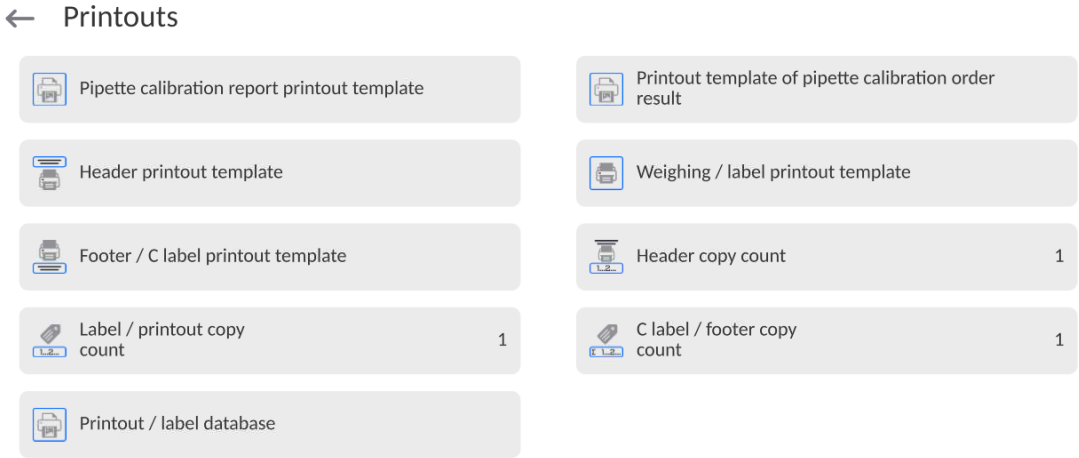


Settings for header, GLP and footer printouts are specified in section 12.5. For settings of pipettes calibration report, read below.

Report content:

| | |
|---|---|
| – Working mode<br>– Operator<br>– Customer<br>– Pipette<br>– Serial number<br>– Channels quantity<br>– Channel no.<br>– Measurement quantity<br>– Cooperation in accordance with ISO 8655<br>– Start date<br>– End date<br>– Dashes | – Signature<br>– Non-standard printout<br>– Water temperature<br>– Temperature<br>– Humidity<br>– Pressure<br>– Z coefficient<br>– Measurements and statistics<br>– Statistics<br>– Status<br>– Empty line |

### 22.5. Pipette Calibration Start-Up

In order to carry out pipette calibration process, you need a special adapter. The adapter does not come standard with the balance.
The adapter facilitates piston pipette calibration and/or verification, and is intended for 5Y balances.
The adapter has been designed to minimize evaporation occurring in the course of liquid weighing. It comprises a mini weighing chamber, installed inside the weighing chamber of a balance, an evaporation ring, and a dedicated weighing pan, enabling to locate a measuring vessel in the very centre.
Application of the adapter prevents risk of liquid evaporation during the calibration process. Compact dimensions of the adapter along with use of the evaporation ring enable maintaining high humidity rate inside the weighing chamber.
Carried out research has proved that the adapter eliminates or considerably reduces liquid evaporation process. Eliminated/reduced liquid evaporation is a key factor while calibrating piston pipettes by means of a gravimetric method.
Selecting an appropriate adapter and balance is conditioned by calibrated pipettes type.
Prior to pipettes calibration start, install the adapter inside the weighing chamber, next enter data regarding pipettes that are to be calibrated, include complete pipette characteristics and values of errors (see: Pipettes Database).
Now set pipettes calibration parameters:

- Measurements quantity
- Request serial number (YES/NO).
- Operation with adherence to ISO 8655 (YES/NO).
- Upload ambient conditions parameters from THB sensor (YES/NO).

***Caution:*** *For parameters and settings overview, read section 22.1 of this user manual.*

With all parameters set, you can start pipette calibration.

**Pipette calibration procedure:**

1. Press <Select pipette> button.
2. List of pipettes is displayed, select pipette to be calibrated.
3. Pipette calibration home screen is displayed, selected pipette name is visible in the Info field.
4. Press <Start> button in the bottom bar.
5. With <YES> value set for <Request serial number> parameter, a window for entering the number opens. Enter the value and confirm.
6. Window for entering ambient conditions values is displayed, read the temperature, humidity and pressure from external sensors and enter them; next, press <Accept> button.
   With <YES> value set for <Upload ambient conditions parameters from THB sensor> parameter, the temperature, humidity and pressure values are acquired automatically from the THB sensor; water temperature must be entered manually, enter it and press <Accept> button to confirm.
7. Pipette calibration home screen is displayed, tested volume and process status <In progress> are displayed in the Info field. The task bar displays prompts guiding you through the process - <C1/V1/N1 Sample weighing>.
   Where: C1 – channel number; V1 – volume number for the channel; N1 – measurement number for the tested volume.
8. Keep following the prompts until the calibration process is completed. Info field provides you with information on the on-going process (average volume, error values).
9. Upon confirmation of the last measurement, a window with ambient conditions parameters is displayed again. Enter the parameters and press <Accept> button to confirm.
10. A report is generated automatically, the report is printed and recorded in the pipette calibration reports database (ambient conditions and water temperature values given on a report are average values from the process);
11. Press <> button located in the bottom bar. For multichannel pipette, you are asked whether the process shall be continued for remaining channels. Upon confirmation, the balance carries out calibration process for the following channels. The settings remain unchanged.
12. You can start the following procedure for the same pipette or select another pipette form the pipettes database.

### 22.6. Performed Pipette Calibrations Report

Upon completed calibration process, a report is generated. The report is saved to <**Pipette calibration reports**> database. The files are named by date and time (hour) of the calibration process performance.

**<u>Report example:</u>**

---------- Pipettes Calibration ----------

| | |
|---|---|
| Operator | Kowalski |
| Customer | Nowak |
| Pipette | p901\1k |
| Serial no. | 7777 |
| Channels quantity | 1 |
| Channel no. | 1 |
| Measurements quantity | 10 |
| Operation with adherence to ISO 8655 | Yes |
| Start date | 2012.03.15 07:50:44 |
| End date | 2012.03.15 07:54:34 |
| Water temperature | 22.15 °C |
| Temperature | 21 °C |
| Humidity | 48 % |
| Pressure | 1005 h Pa |
| Z coefficient | 1.00328 |

------- Tested volume: 1000 µl -------

| | |
|---|---|
| 1 0.998 g | 1000.82389 µl |
| 2 0.998 g | 1000.82389 µl |
| . | |
| Average volume | 1000.82389 µl |
| Average [%] | 100.08 % |
| Systematic error | 0.82389 µl |
| Systematic error [%] | 0.08239 % |
| Permissible error | ± 16 µl |
| Random error | 0 µl |
| Random error [%] | 0 % |
| Permissible error | ± 6 µl |
| Status | Positive |

---

Signature .....

# 23. DIFFERENTIAL WEIGHING

**<Differential weighing>** is a working mode enabling you to analyse changes of mass of a single sample or multiple samples.
The process is carried out by determining sample's initial mass; next the sample is subjected to different processes. As a result, some sample's ingredients are either separated or added. Finally, the sample is repeatedly weighed (differential weighing). After the final weighing, the balance determines the difference between those two mass values (initial and final).
Differential weighing mode allows you to:

- Determine **a series**; each series may contain several samples.
- Assign a name for each series, print or export data on a series to a connected USB flash drive;
- For each sample: determine tare value, initial mass, and carry out up to five measurements for the final mass.

In order to operate the differential weighing mode, first it is necessary to enter weighing series to the database, define samples in the series, next trigger the series. To create series, go to series database. For detailed procedure informing you how to create a formulation, read later sections of this user manual.

**Differential Weighing mode screen:**

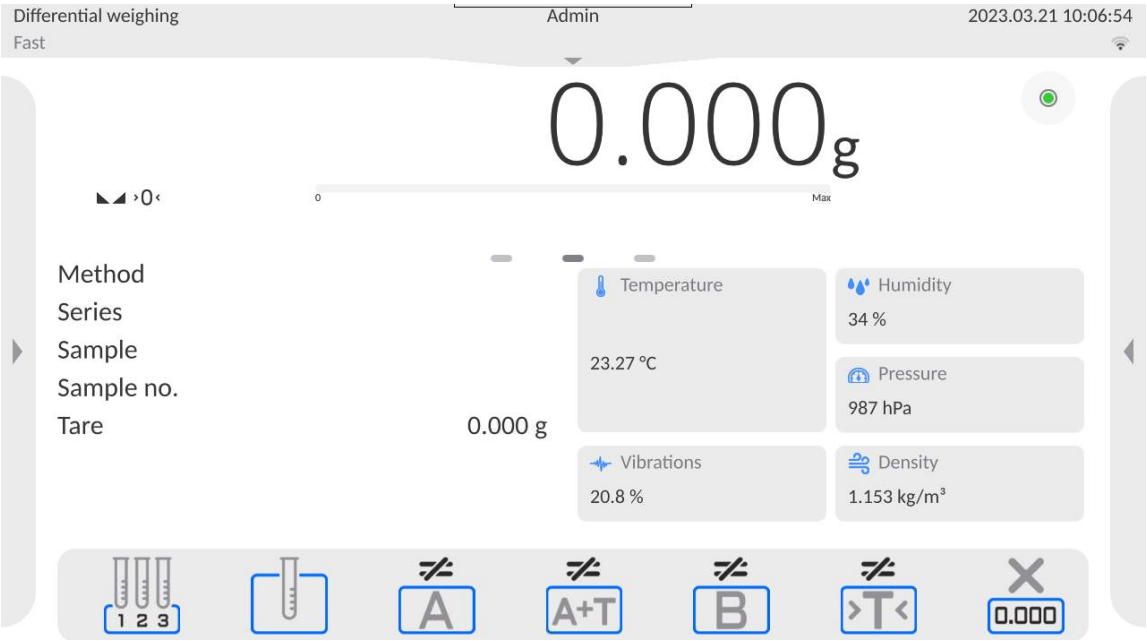


## 23.1. Mode Related Settings

The supplementary settings enable you to adjust the working mode to your needs and requirements. To access the settings, follow the below procedure.

**Procedure:**

1. Slide out the menu on the left.
2. The following submenus are displayed: Settings, Buttons, Information, Printouts, Series, Profile.
3. Select <Settings> menu.
4. Functions related to the differential weighing are displayed.

**Differential Weighing mode settings:**

- **Threshold**: mass value (maximum mass of a sample, e.g. filter)
- **Ambient conditions**: use this function to force operator to enter temperature and humidity prior to the weighing operation: <Weighing A, Weighing T+A, Taring T>
  - NO - value not required
  - ONLINE – values taken from the ambient conditions module cooperating with the balance.
  - VALUE – values taken from a device other than the ambient conditions module must be entered manually.
- **Maximum quantity of weighings**: use this function to declare how many times final weighing <B> is to be repeated – 5 times maximum; the parameter setting is valid for all measuring series.
- For information on how to operate remaining functions, read section 13.6 *Additional Parameters for a Weighing Process*.

### 23.2. Differential Weighing - Quick Access Buttons

Each working mode features automatically displayed set of default on-screen quick access buttons. The set can be modified, i.e. you can add out-of-list quick access buttons to it. Such operation requires particular permission level.

This section presents only those buttons that are characteristic for the *Differential Weighing* mode.

**Weighing A**
Press to start weighing initial mass <A>. The process is carried out as a separate operation.

**Weighing (T+A)**
Press to start sample container taring which is next followed automatically by sample weighing (non-separable operations). Upon initiation, you are asked to set sample name.

**Tare (T)**
Press to start sample container taring. The process is carried out as a separate operation. Upon initiation, you are asked to set sample name.

**Weighing B**
Press to start weighing final mass <B>. The button triggers differential weighing mode

**Series**
Press to select a sample for which the differential weighing process is to be carried out.

**Sample**
Press to select a sample for currently carried out process of a particular series.

**Copy Tare**
Press to copy tare value, determined for a given sample, to all current series samples (for which the tare value has not been assigned yet).

**Deleting Values**
Press to delete the most recently recorded mass value (tare, weighing A or B).

**Add sample**
Press to add a new sample; a window with an on-screen keyboard is displayed, use it to provide the new sample name. To add a new sample, first select a series for which the sample is to be added. Mind not to start weighing operation before selecting the series and adding the sample.

### 23.3. Adding Series to Series Database

Series Database comprises series and series samples.
While creating a series, first set its name, next add samples. The software is intuitive, and you are guided by means of respective messages. Provide a name for each sample. To add a series, go either to the series database or the differential weighing mode.

**Procedure:**

- Enter <Database> submenu and press <Series> button.
- Press < Add> button, a series is added.

A new record is automatically added to the database, it is opened in an editing mode. Enter the necessary parameters.

List of parameters defined for series:

1. Name: press “Name” field, a window for entering series name opens.
2. Code: enter series code.
3. Customer: select a customer for whom the series measurements are to be carried out.
4. Samples: press to view the list of samples; for a new series the list is empty, add new samples.
   - to do it press < Add> button, the sample is added automatically’ its name can be edited and changed.
5. Samples quantity – parameter disabled for editing; the number is updated at real time by the software upon adding a new sample to the series.

For each sample on the list, its current differential weighing status is displayed (weighing process stage).
Newly added samples do not have any status assigned – the field is empty. The status is updated in real time after each completed weighing process stage.

### 23.4. Differential Weighing Process Example

Activate DIFFERENTIAL WEIGHING mode, next:

- select information to be displayed in the grey workspace,
- select appropriate quick access buttons,
- add a series to the balance memory (a series is identified by name),
- add samples to a series (sample is identified by name),
- return to the home screen of the differential weighing mode.

**Selecting a series:**
Press <SERIES> quick access button, a window with series database opens.
Enter the database, press field with series that is to be carried out.
The selected series name is displayed in the grey workspace (provided that such information is enabled to be displayed).

Upon selecting a series, press one of the following buttons determining how the differential weighing is to be carried out:

**Weighing A**
Press to start weighing initial mass.

**Tare (T)**
Press to start sample container taring.

**Weighing (T+A)**
Press to start sample container taring which is next followed automatically by sample weighing (non-separable operations).

**Weighing B**
Press to start weighing final mass. The button is enabled only for a series containing samples for which weighing A has been carried out. If there are no such samples, the operation is disabled.

**Weighing A**

Upon pressing Weighing A button, the balance searches the samples list in order to find the first sample for which weighing <A> is still to be carried out. If there are no such samples, the balance displays a message informing you that the operation is disabled.
If the operation is enabled, then new data on the initiated process is displayed in the grey workspace.
You are guided through the process by means of prompts visible either in the workspace or bottom bar.

Load the weighing pan with a sample and press <> button.
For <Ambient condition> parameter set to <Value> option, a window for entering temperature and humidity values is displayed. For <Ambient condition> parameter set to <ONLINE> option, a window for confirmation of values taken from the ambient conditions module is displayed.

***Caution:***
*If <Ambient conditions> parameter for the differential weighing mode is set to <No> value, the software skips this part of the process.*

Press <> button to confirm ambient conditions values; the differential weighing home screen is displayed, you are prompted to unload the weighing pan.

Unload the weighing pan and press <> button.
The balance searches the samples list again in order to find the first sample for which weighing <B> is still to be carried out. Follow the above procedure and carry out weighing of the remaining samples.

In order to abort the process, press <> button.

### Weighing T

Upon pressing the Weighing T button, the balance searches the samples list in order to find the first sample for which weighing <T> is still to be carried out. If there are no such samples, the balance displays a message informing you that the operation is disabled.
If the operation is enabled, then new data on the initiated process are displayed in the grey workspace.
You are guided through the process by means of prompts visible either in the workspace or bottom bar.

Load the weighing pan with a sample container and press <> button.

Upon pressing <> button, you are prompted to unload the weighing pan.

Unload the weighing pan and press <> button. The balance searches samples list again in order to find the next sample for which weighing <T> is still to be carried out.
Follow the above procedure and weigh the remaining containers.

In order to abort the process, press <> button.

### Weighing T+A

Upon pressing the Weighing T button, the balance searches the samples list in order to find the first sample for which weighing <T> is still to be carried out. If there are no such samples, the balance displays a message informing you that the operation is disabled.
If the operation is enabled, then new data on the initiated process are displayed in the grey workspace.
You are guided through the process by means of prompts visible either in the workspace or bottom bar.

Load the weighing pan with a sample container and press <> button.
A container mass value is assigned to a sample as a tare value; balance indication is zeroed, and you are prompted to place the sample in the container. Follow the prompt and press <> button.
For <Ambient condition> parameter set to <VALUE> option, a window for entering temperature and humidity values is displayed. For <Ambient condition> parameter set to <ONLINE> option, a window for confirmation of values taken from the ambient conditions module is displayed.

***Caution:***
*If <Ambient conditions> parameter for the differential weighing mode is set to <No> value, the software skips this part of the process.*

Press <> button to confirm ambient conditions values, differential weighing home screen is displayed, you are prompted to unload the weighing pan.

Unload the weighing pan and press <> button. The balance searches the samples list again in order to find the first sample for which weighing <B> is still to be carried out.
Follow the above procedure and carry out weighing of the remaining samples.

In order to abort the process, press <> button.

Measurement of sample series can be carried out under the following procedures: weighing A, weighing T or weighing T+A. Each of the series samples features status informing you on a process stage for a given sample. Upon entering the series database and selecting a particular series for preview, you are provided with a list of samples recorded for the series.

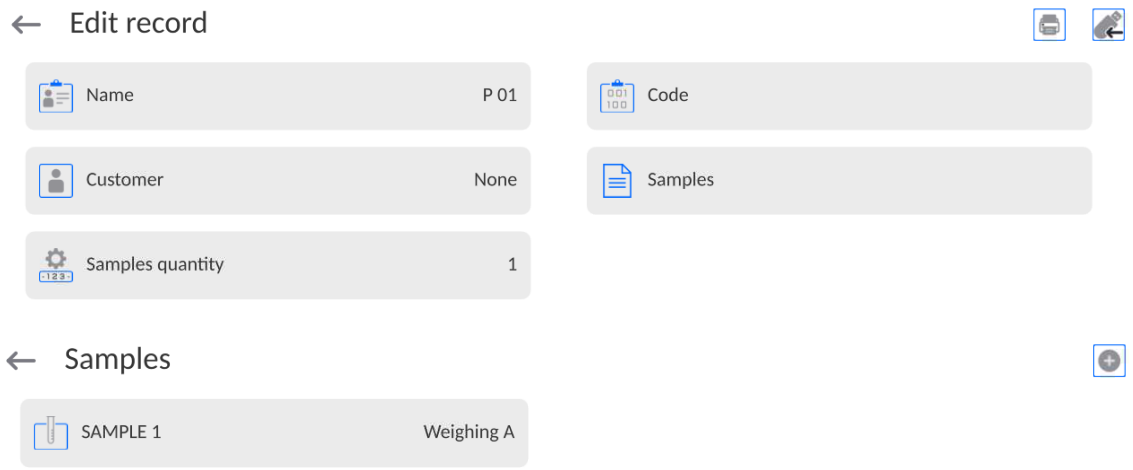


Status overview:

- weighing A, measurements completed for <Weighing A> or <Weighing T+A> procedure,
- weighing T, measurements completed for <Weighing T> procedure.

In order to preview detailed information on a sample, press field with its name.
Sample window contains the following data:

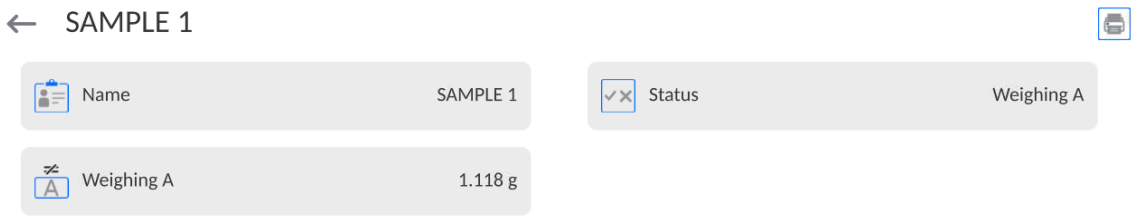


For sample measured under:

- weighing A procedure only – tare value is <0>,
- weighing T procedure only – weighing A value is <0>,
- weighing T+A procedure – tare and weighing A values are mass.

You can print weighed sample data; to do it press a printer pictogram located in the top bar.
In order to preview data on weighing A, press <Weighing A> field:

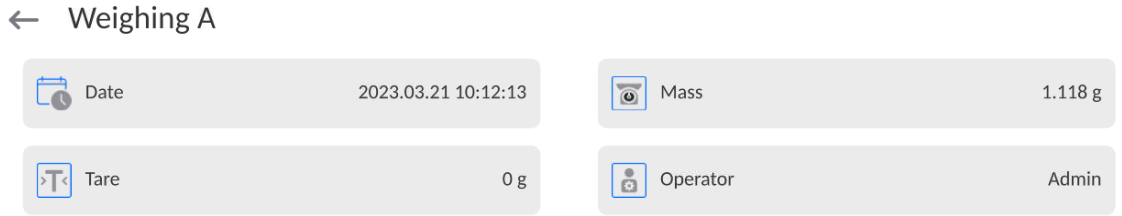


If a given series already contains samples for which weighing A (initial mass) has been carried out, you can proceed to carrying out weighing B (final mass).

## Weighing B

Upon pressing the Weighing B button, the balance searches the samples list in order to find the first sample for which weighing <B> is still to be carried out. If there are no such samples, the balance displays a message informing you that the operation is disabled. If the operation is enabled, then new data on initiated process are displayed in the grey workspace.

***Caution:***
*Next to <Weighing B> caption you can see digits 1/3, where <1> means the first measuring cycle of type B, and <3> means that <REPETITIONS QUANTITY> parameter is set to <3> value (3 cycles). The software prompts you to carry out the <FIRST> cycle, out of <3> cycles, for all samples in the series for which the measurement is enabled (it is required that weighing A is already completed for the sample).*

You are guided through the process by means of prompts visible either in the workspace or bottom bar.

If tare is assigned to a sample, then its value is displayed with '-' sign. Load the weighing pan with a sample (if tare is assigned, load the sample into a container) and press <>.

For <Ambient conditions> parameter set to <VALUE> option, a window for entering temperature and humidity values is displayed. For <Ambient condition> parameter set to <ONLINE> option, a window for confirmation of values taken from the ambient conditions module is displayed.

***Caution:***
*If <Ambient conditions> parameter for the differential weighing mode is set to <No> value, the software skips this part of the process.*

Press <> button to confirm ambient conditions values; the differential weighing home screen is displayed, you are prompted to unload the weighing pan.

Unload the weighing pan and press <> button. The balance searches the samples list again in order to find the first sample for which weighing <B> is still to be carried out. Follow the above procedure and carry out weighing of the remaining samples.

In order to abort the process, press <> button.

Upon completing measurements of final mass for the samples in a series, you can check the results in the series database. To check the results, enter the database, select a series, then select samples and a specific sample for which <Weighing B> has been carried out.

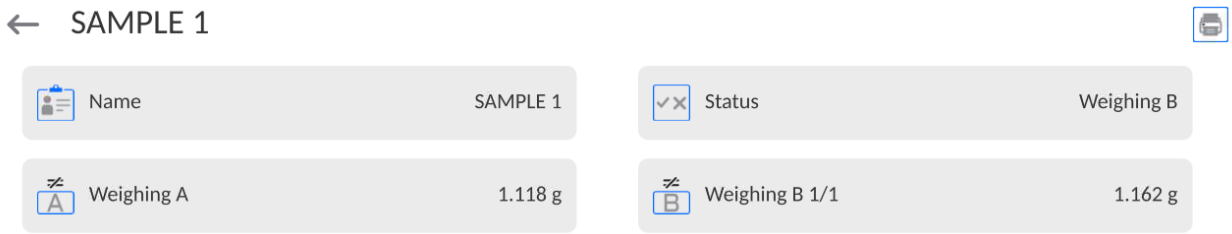

Particular weighing's preview mode provides you with values. Numbers referring to weighing <B> inform on the measuring cycle.
Data on a specific series can be printed or exported to a file.

### 23.5. Copy Tare

Copy Tare option enables copying once selected tare value (in a series) to all samples which do not have a tare value assigned, and for which the differential weighing process (status other than Weighing B) has not been completed.

**Procedure:**

- Press button.
- A list of samples with tare values assigned is displayed.
- Press tare value that is to be applied to other samples which do not have tare assigned yet.
- The selected tare value is assigned automatically.

### 23.6. Sample Selection

Sample Selection enables selecting a sample for weighing. With use of this option, you do not have to weigh samples in an order suggested by the software. The option is available only after initiating a given process.

**Procedure:**

- Go to the differential weighing mode, select a series, press procedure button, e.g. <Weighing A> procedure.
- A list of samples for which the selected procedure can be carried out is displayed.
- Select a sample that is to be weighed.
- This option is particularly useful if a series contains a large number of samples, and you want to weigh a sample that is at the end of a series.

### 23.7. Deleting Values

Delete option enables deleting last weighing record added to the database. It refers to all processes in the working mode. The software enables deleting only the most recent measurement operation.

If you have saved a weighing record by mistake (sample or tare), i.e. wrong sample or container has been used, press button.

The weighing record is automatically deleted, the software returns to the previous step of the procedure. The process can be carried out once only, otherwise a respective message informing on error is displayed and deleting a record is aborted.

### 23.8. Printouts

Printouts option enables you to determine the content of a particular standard printout, and to define a non-standard printout.

**Standard printout**

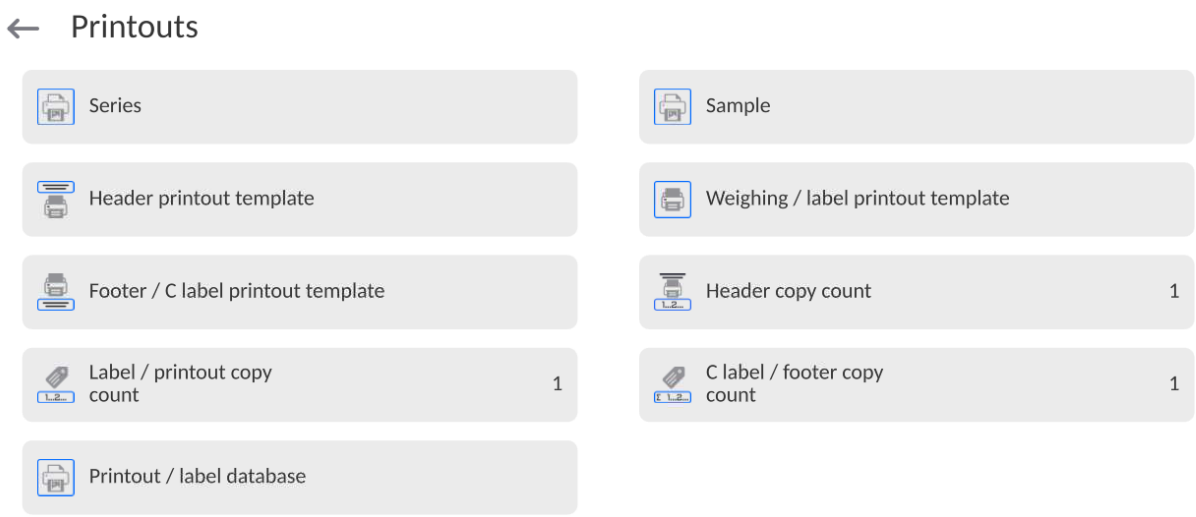


It comprises five internal sections containing different variables. Variable settings: YES - print; NO - do not print.
Settings for header, GLP and footer printouts are specified in section 12.5. For settings of series and sample printout template, read below.

Printout content:

| Series printout content: | Samples printout content: |
|---|---|
| – Dashes<br>– Series<br>– Customer<br>– Samples quantity<br>– Samples<br>– Empty line<br>– Dashes<br>– Signature<br>– Non-standard printout | – Dashes<br>– Sample<br>– Sample no.<br>– Status<br>– Tare<br>– Temperature<br>– Humidity<br>– Pressure<br>– Non-standard printout<br>– Weighing A<br>• Weighing A<br>• Date<br>• Time<br>• Level status<br>• Warehouse<br>• Product<br>• Packaging<br>• Universal variable 1 … 5<br>• Net<br>• Tare<br>• Non-standard printout<br>– Weighing B<br>• Weighing B |

| | |
|---|---|
| | • Date<br>• Time<br>• Level status<br>• Warehouse<br>• Product<br>• Packaging<br>• Universal variable 1 … 5<br>• Net<br>• Tare<br>• Interval<br>• Difference<br>• Difference %<br>• Residue %<br>• Non-standard printout |

## 24. STATISTICAL QUALITY CONTROL- SQC

<SQC **Statistical Quality Control>** is a working mode designed to support control of product packing process. It enables detecting product deficiency and excess. If the weighing results are stored in the database, then trend analysis can be carried out and displayed in a form of a graph.
The software provides the possibility of controlling a batch comprising up to 1000 samples.
Each completed control process is saved to the SQC database, and its results are ready for previewing at any time. Each series has a determined set of parameters that are stored in the database: maximum, minimum, standard deviation and average value for each batch, etc. SQC control process can be carried out manually (by pressing <PRINT> button for each measurement) or automatically (automatically carried out record of stable measurements).

The balances feature module for statistical control processes. It is supported by a database containing list of products with error values <T4->; <T3->; <T2->; <T1->; <T1+>; <T2+>; <T3+>; <T4+>.
The control process is initiated automatically and completed on controlling a required quantity of samples. As a user you define how many samples are to be controlled, to do it go to SQC settings.
After completed control process, a final report can be generated and/or printed. Data on a control is also automatically saved to the Database of SQC Reports.

**Control process:**
- operator selection,
- product selection,
- control start,
- download of weighing records,
- control finish (carried out automatically when predefined number of samples is weighed - batch),
- control report print.

### 24.1. SQC Mode Start-Up

**In order to activate SQC mode, you need to be assigned with**

- permission level required for carrying out control process.

***Caution:***

1. *Starting a control requires **<Operator>** permission level at least. If a logged user or an anonymous user's permission level is **<Guest>** then on control start, the message **<Unauthorized access>*** is displayed.
2. *For information on logging procedure, read section 7 of this user manual; for information on how to grant permissions, read section 10 of this user manual.*

- Set **<SQC>** mode parameters; For detailed information, read section 24.2.
- Select a product that is to be controlled (press <> button), remember to select a product with correctly entered control data,

***Caution:***
*List of data to be entered prior to the control start:*

| | |
|---|---|
| **Mass** | Product nominal mass. |
| **Tare** | Packaging mass in adjustment unit |
| **SQC** | |
| **Thresholds mode** | Declaring whether thresholds values are to be entered in [g], or in percent of the product nominal mass. |
| **Thresholds' reference value** | Declaring which value, nominal or average, is to be the basis for calculation of thresholds by declared error values. |
| **Batch quantity** | Declaring quantity of controlled batch. |
| **[T4-] error value** | Max permissible negative T4 error value with nominal weight value as point of reference. |
| **[T3-] error value** | Max permissible negative T3 error value with nominal weight value as point of reference. |
| **[T2-] error value** | Max permissible negative T2 error value with nominal weight value as point of reference. |
| **[T1-] error value** | Max permissible negative T1 error value with nominal weight value as point of reference. |
| **[T1+] error value** | Max permissible positive T1 error value with nominal weight value as point of reference. |
| **[T2+] error value** | Max permissible positive T2 error value with nominal weight value as point of reference. |
| **[T3+] error value** | Max permissible positive T3 error value with nominal weight value as point of reference. |
| **[T4+] error value** | Max permissible positive T4 error value with nominal weight value as point of reference. |
| **Disqualifying quantity of samples [Qn-T4]** | Max permissible quantity of T4 low limit errors with nominal weight as point of reference. |
| **Disqualifying quantity of samples [Qn-T3]** | Max permissible quantity of T3 low limit errors with nominal weight as point of reference. |

| | |
|---|---|
| **Disqualifying quantity of samples [Qn-T2]** | Max permissible quantity of T2 low limit errors with nominal weight as point of reference. |
| **Disqualifying quantity of samples [Qn-T1]** | Max permissible quantity of T1 low limit errors with nominal weight as point of reference. |
| **Disqualifying quantity of samples [Qn+T1]** | Max permissible quantity of T1 high limit errors with nominal weight as point of reference. |
| **Disqualifying quantity of samples [Qn+T2]** | Max permissible quantity of T2 high limit errors with nominal weight as point of reference. |
| **Disqualifying quantity of samples [Qn+T3]** | Max permissible quantity of T3 high limit errors with nominal weight as point of reference. |
| **Disqualifying quantity of samples [Qn+T4]** | Max permissible quantity of T4 high limit errors with nominal weight as point of reference. |

***Caution:***
*For information on how to edit product records, read section 28.3 of this user manual.*

- Return to **<SQC>** mode home screen, press button (control start) located in the bottom bar,
- **<Batch Number>** window with an on-screen keyboard opens (only if <Request batch number> parameter is set to <YES> parameter),
- Enter the number of controlled product batch, press button to confirm.

***Caution:*** *You can abort the control process at any time, to do it press button (control stop) located in the bottom bar.*

### 24.2. Mode Related Settings

The supplementary settings enable you to adjust the working mode to your needs and requirements.

**SQC functions:**

- **Request batch number**
  use this function to force the user to enter batch number of a product prior to each control procedure start.
  **Procedure:**
  Select <Request batch number> parameter, window with NO/YES value is displayed. Select <No> – option disabled, or <Yes> – option enabled.
  The previous screen is displayed automatically.

- **Batch number**
  use this function to enter identification number for controlled products batch.
  **Procedure:**
  Select <Batch number> parameter, Batch Number edit box with an alphanumeric keyboard is displayed.
  Enter the required batch number and press button to confirm.
  - For detailed information regarding remaining functions, read section 13.6, *Additional Parameters for a Weighing Process.*

### 24.3. Control Operation

**Procedure:**

Press <Product> button to select product to be controlled. Press button located in the bottom bar to initiate the control; an edit box with an on-screen keyboard opens. Enter the batch number and press 'tick' button to confirm the operation. The software proceeds to the next process steps.
In the course of the control, measurement results are analysed in real time and the following prompts are displayed:
Messages displayed during the control:

| | | |
|---|---|---|
| **Batch quantity 1 / 10** | - | A command on process course and the quantity of all measurements in a tested batch. |
| **Product** | - | Controlled product name. |

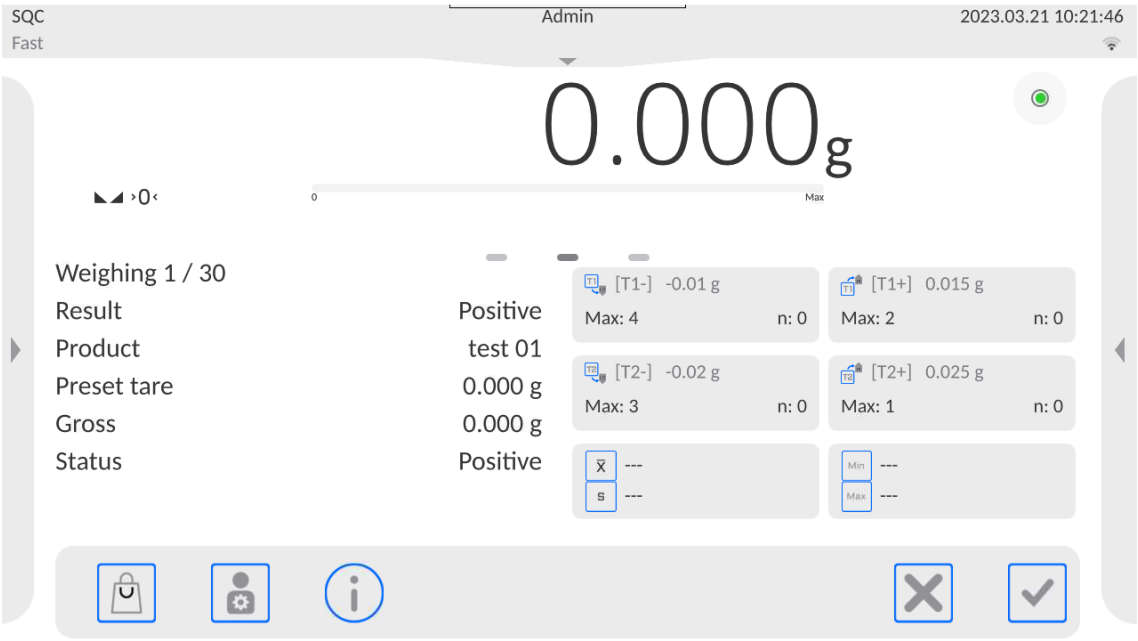


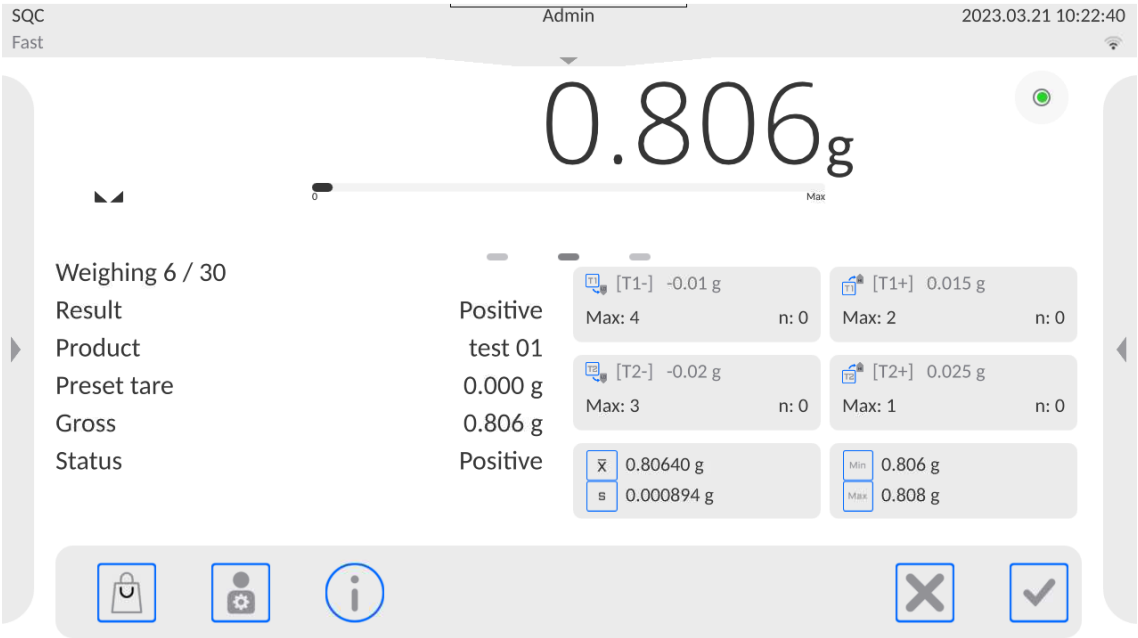

**Control status**

There are different control status options differentiated by colour. A particular colour informs you whether the permissible error quantities are out of range or not. Error values and permissible error quantities are specified for a particular product.

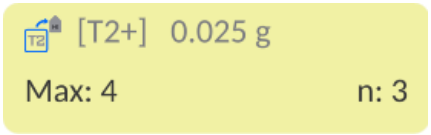


- yellow warns that occurrence of another **2T-** error will end with negative result of control.

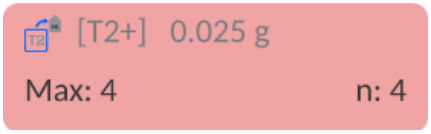


- **2T-** error has occurred, control result is negative (red)

Upon process completion, a report is generated and recorded in the database.

***Caution:*** *For a template and an example of a report on a control process, read section 25.4 of this user manual.*

### 24.4. SQC Control Report

| *An exemplary SQC control report:* | | | |
|---|---|---|---|
| *----- Report No.: W/16/07/15/07/45 -----* | | *[T1+] errors quantity* | *0* |
| *----------* | | *[T2+] errors quantity* | *0* |
| | | *Min* | *50.0525 g* |
| *Balance type* | *XA 5Y* | *Max* | *50.3638 g* |
| *Range* | *220 g* | *Average* | *50.291163 g* |
| *Reading unit* | *0.0001 g* | *Sum* | *1508.7349 g* |
| *Balan S/N* | *442566* | *Standard deviation* | *0.133916 g* |
| *Start date* | *16.07.15 07:41:55* | *Method* | *SQC* |
| *End date* | *16.07.15 07:45:25* | | |
| *Operator* | *Kowalski* | *Result* | *Positive* |
| *Product* | *TEST 01* | | |
| *Batch number* | | *Measurements* | |
| *Nominal mass* | *50 g* | *1. 50.0525 g* | |
| *Tare* | *0 g* | *2. 50.0525 g* | |
| *[T1-] error value* | *1 g* | *3. 50.0525 g* | |
| *[T2-] error value* | *3 g* | *4. 50.0525 g* | |
| *[T1+] error value* | *1.5 g* | *.* | |
| *[T2+] error value* | *4 g* | *----------* | |
| *Batch quantity* | *100* | *Signature* | |
| *Measurements quantity* | *30* | | |
| *[T1-] errors quantity* | *0* | *.....* | |
| *[T2-] errors quantity* | *0* | | |

**Report template**
Open **<Printouts / SQC report printout template>** section to edit a template of a report. Only variables with <YES> attribute are printed on a report.

## 25. PEAK HOLD

**Peak Hold** is a working mode allowing you to snap the value of maximum force applied to the weighing pan during one loading.
Apart from the standard settings for this mode (described in the *Weighing* mode section), an additional parameter has been introduced, it sets threshold value determining function activation.

### 25.1. Mode Related Settings

The supplementary settings enable you to adjust the working mode to your needs and requirements. To access the settings, follow the below procedure.

**Procedure:**
1. Slide out the menu on the left.
2. The following submenus are displayed: Settings, Buttons, Information, Printouts, Series, Profile.
3. Select <Settings> menu.
4. Functions related to Peak Hold mode are displayed.

**THRESHOLD** – value determining start point for peak hold control performed by the balance software. Remember to set this threshold prior to the measuring process.

### 25.2. Means of Operation

- Enter <PEAK HOLD> mode.
  Once you select the mode, the function is active. Set the threshold (in grams) determining point beyond which the function starts to register maximum force applied.
- From now on, the balance registers and holds every single weighing which is above the threshold, and which is higher than the result of the previous peak hold. If the software detects mass above the threshold, the highest detected indication is held on the main display and the pictogram <Max> is shown on the left.

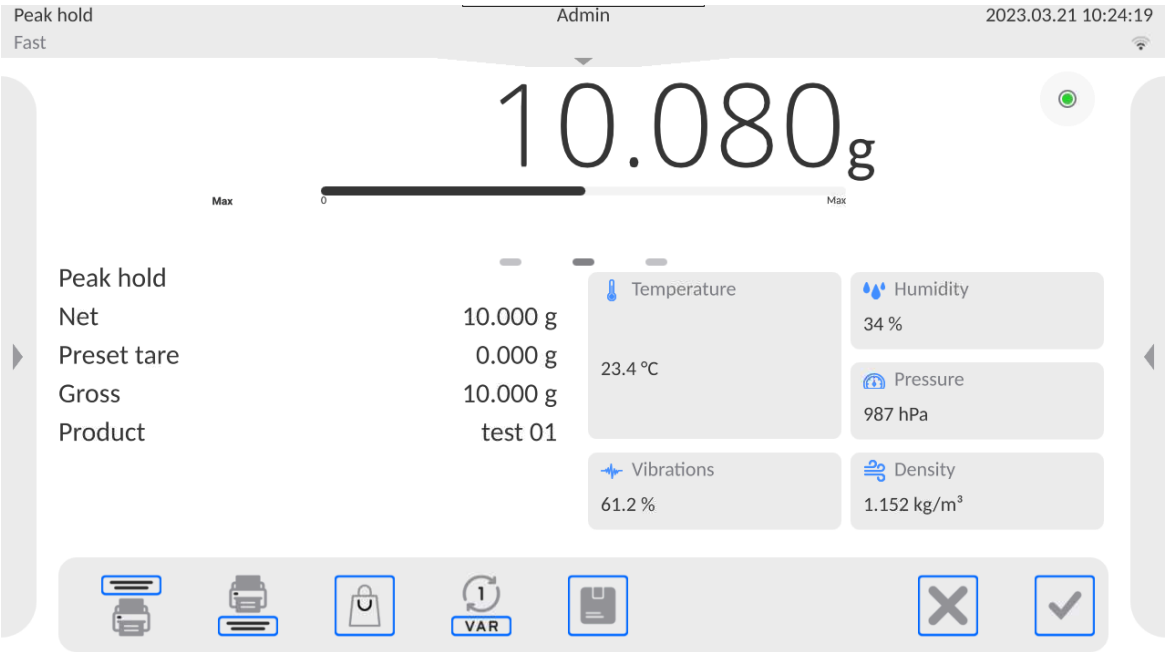


In order to print the result, press button.
The start of the next process of peak hold measurement is possible only after removing the load from the weighing pan and pressing button. This causes returning to the home screen of <Peak Hold> mode. Pictogram <Max> is automatically deleted.

## 26. PACKAGED GOODS CONTROL

*(function disabled for standard balance models).*

**<PGC>** is a working mode enabling performance of packaged goods controls (single stand control or multi-stand control), supported by a database containing products and operators. A control initiated using balance is automatically finished after a pre-set packages quantity (samples) has been controlled.
Balances may connect to **E2R SYSTEM** software and form a multi-stand system (network). Each weighing instrument is an independent weighing workstation, and information on the control is sent to the computer software. Computer software enables collecting real-time data from each of the connected weighing instruments. The system allows you to start control process using the instrument or computer software.

Collected data allow you to assess the quality of produced packaged goods and their conformity with:

- the Regulation by the Central Office of Measures of 3 April 1997, on the requirements concerning quantity inspection of packaged goods control, which inspection is to be carried out by means of random selection of the measurements results and sending those results to **packaged goods control** procedure (FOR EUROPEAN UNION).
- a company quality control system (internal control).

**Control process:**
- operator selection,
- product selection,
- control start,
- download of weighing records,
- control finish (carried out automatically when predefined number of packages is weighed),
- control report print.

***Caution:*** *For detailed information on establishing a connection with* ***<E2R System>,*** *read section 'COMPUTER'.*

### 26.1. PGC Mode Start-Up

**Procedure:**
Slide down the top menu, the **<Working modes>** submenu is open; it contains a list of all the working modes. Select the **<PGC>** mode, its home screen is displayed.
- **<Start control>** message is visible in the bottom bar along with 'tick' button; press it to start the control.

Control start.

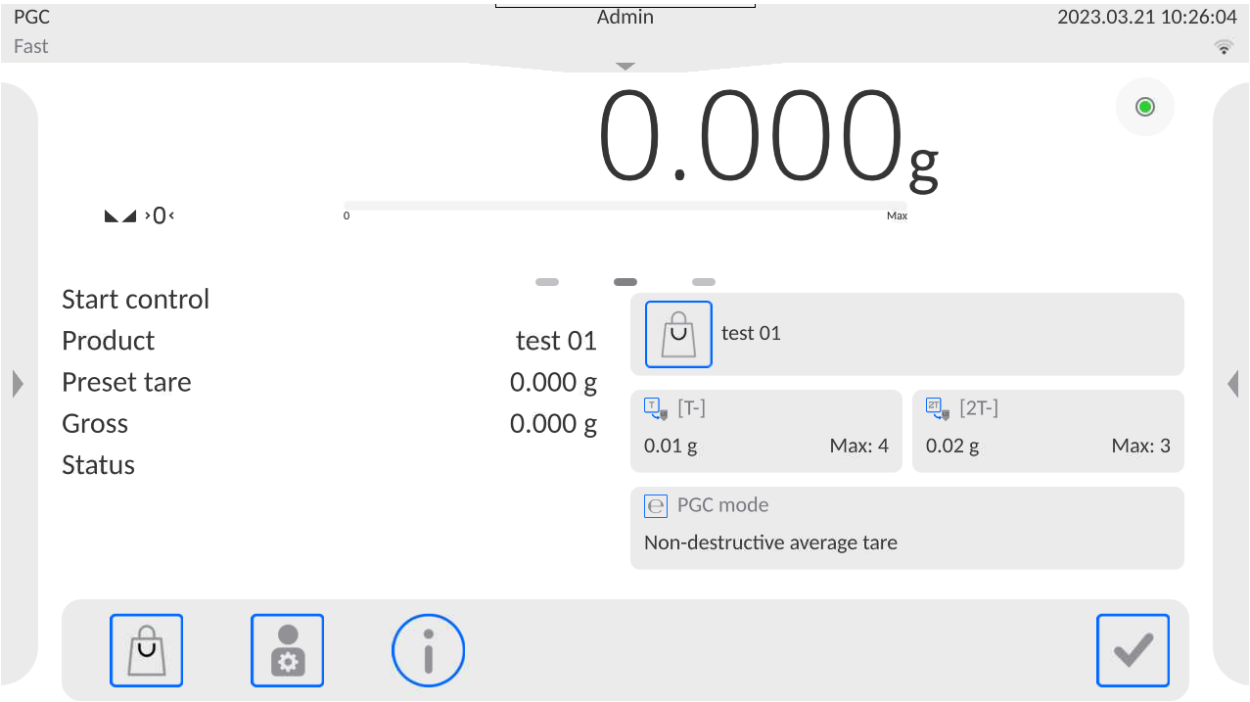

## 26.2. Control Settings

***Caution:***
*Log in to enter control settings.*

Press button located in the **<PGC>** mode home screen; a window with control settings is displayed:

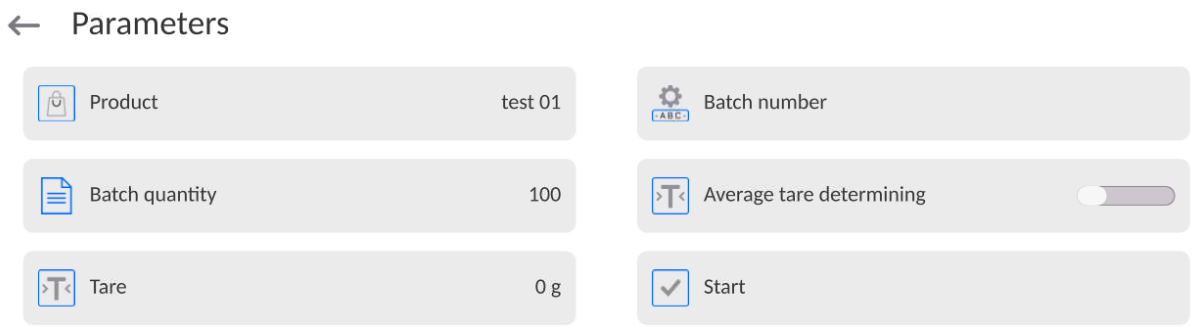


**Where:**
Press to select a product from the database
Batch number
Press to start control process

## 26.3. PGC Mode Local Settings

Local settings for the **<PGC>** mode are available upon slide out the menu on the left in the PGC mode home screen.

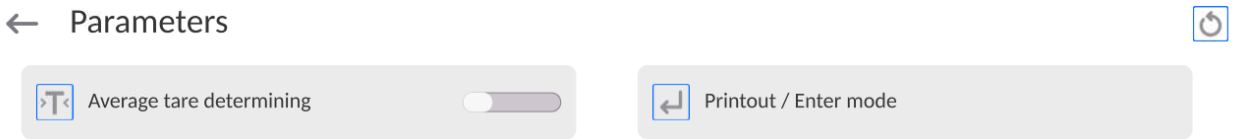


| | |
|---|---|
| Average tare determination | Press to switch on/off the option of average tare determination before control start. |
| Printout/release mode | For detailed description, read section: ***ADDITIONAL PARAMETERS FOR A WEIGHING PROCESS***. |

## 26.4. Editing Product for Control Process

In order to edit a product, enter **<Setup/Databases>** submenu.

***Caution:***
*In the case of connection with **<E2R System>** software, databases editing on the balance is disabled. Edition and export of the products to the balance is carried out using computer software.*

**Procedure:**
- Enter **<Databases>** submenu.
- Enter **<Products>** database and press respective record.

**List of parameters defined for control:**

| Data | Description |
|---|---|
| **Name** | Product name. |
| **Code** | Product code. |
| **EAN code** | Product EAN code. |
| **Mass** | Product nominal mass. |
| **Tare** | Product tare (set automatically upon selecting a product from the database). |
| **PGC mode** | Control type: Non-destructive average tare, Non-destructive empty – full, Destructive full – empty, Destructive empty –full. |
| **Batch portion** | Measurement series for control: Non-destructive empty – full, Destructive full – empty, Destructive empty – full. |
| **PGC: Unit** | Unit of a product: [g] or [ml]. |
| **Batch quantity** | Declaring quantity of controlled batch. |
| **Interval of average tare determination** | Time interval given in [h] determining how often average tare must be estimated for a given product. |
| **Packaging quantity** | Declaring quantity of packages that are to be subjected to process of average tare determination (for Non-destructive average tare type of control). |
| **Average tare coefficient** | Coefficient for threshold of acceptance of standard deviation for average tare. Coefficient range: 0.10 - 0.25. |
| **Internal control** | Submenu for determining internal criteria for a control (see: table below). |
| **Density** | Product density (value range: 0.1g/cm$^3$ - 5g/cm$^3$). |

Apart from the above listed options, there are other ones which may be used for different working modes (e.g. CHECKWEIGHING, THRESHOLDS, etc.)

**List of parameters defined for internal criteria:**

| | |
|---|---|
| **Internal control** | <YES> - enable internal control criteria, <NO> - disable internal control criteria. |
| **Sample quantity** | Sample quantity for a product |
| **[T-] error value** | Max permissible value of **–T** error given in unit set for a product. Measurements lower than **Qn-T** will be considered incorrect. |
| **[T+] error value** | Max permissible value of **+T** error given in unit set for a product. Measurements higher than **Qn+T** will be considered incorrect. |
| **Disqualifying quantity of samples [Qn – 2T]** | Quantity of **-2T** errors disqualifying tested sample. |
| **Disqualifying quantity of samples [Qn - T]** | Quantity of **-T** errors disqualifying tested sample. |
| **Disqualifying quantity of samples [Qn + T]** | Quantity of **+T** errors disqualifying tested sample. |
| **Disqualifying quantity of samples [Qn + 2T]** | Quantity of **+2T** errors disqualifying tested sample |
| **Average limit** | Mode for determination of average limit value (constant or automatic). |
| **Average limit [-]** | Average limit value (minus) for a tested sample (value of average limit as 'constant'). |

| | |
|---|---|
| **Average limit [+]** | Average limit value (plus) for a tested sample (value of average limit as 'constant'). |
| **Coefficient value [-Wk]** | Multiplier of standard deviation for value of average limit (minus) calculated automatically. |
| **Coefficient value [+Wk]** | Multiplier of standard deviation for value of average limit (plus) calculated automatically. |

### 26.5. Control Process Start

**In order to activate the PGC mode, you need to be assigned with**

- permission level required for carrying out control process.

  ***Caution:***
  *For information on logging procedure, read section 7 of this user manua; for information on how to grant permission levels, read section 10 of this user manual.*

- Select product with correctly entered control data.

- Enter weighing mode parameters.

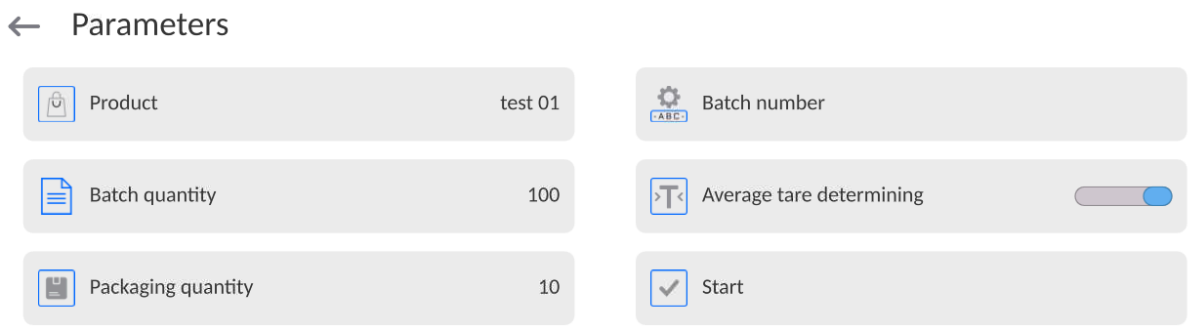


  Batch number – identification of controlled products batch.
  Bach quantity – software controls specified number of samples.
  Average tare determining
  Packages quantity – more than 10.
- Remove load from the weighing pan.
- Press <✓> button located at the bottom of the screen. The home screen containing entered data is displayed.

***Caution:*** *If prior to control:*
- *Load has not been removed from the weighing pan or if other zeroing requirements have not been met (e.g. unstable indication), balance shows message:* ***<-Err 2>****. Upon noticing <-Err 2> message, unload the balance and wait until all zeroing requirements are met.*
- *You have not logged in, or you are logged but not assigned with the right permissions to perform control; message:* ***<Access denied>*** *is displayed.*
- *You have not selected a product from the database; message:* ***<Product is not selected>*** *is displayed.*

### 26.6. Abort Control Procedure

You can abort control at any moment.

**Procedure:** Press button (abort control) located in the bottom part of the process window.
The following message is displayed:

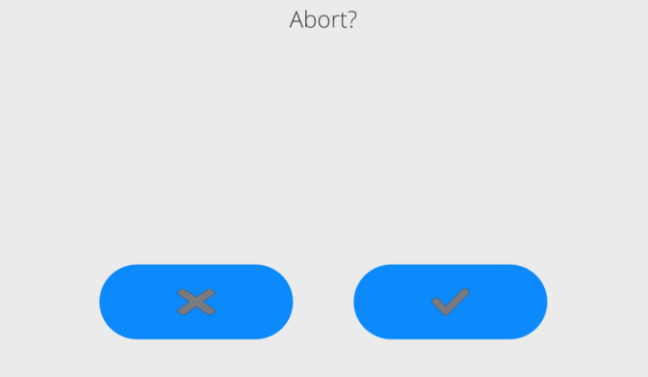


Press button to return to the ongoing control. Press button to abort control and return to the **PGC** mode.
Control reports with status **<ABORTED**> are saved to the **PGC** database.

### 26.7. Non-Destructive Average Tare Control Mode

Prior to control, you can determine average tare by weighing packages.
**Procedure:**
Go to the settings window of the **PGC** mode.
Activate <**Average Tare Determining**> function.

The following window is displayed:

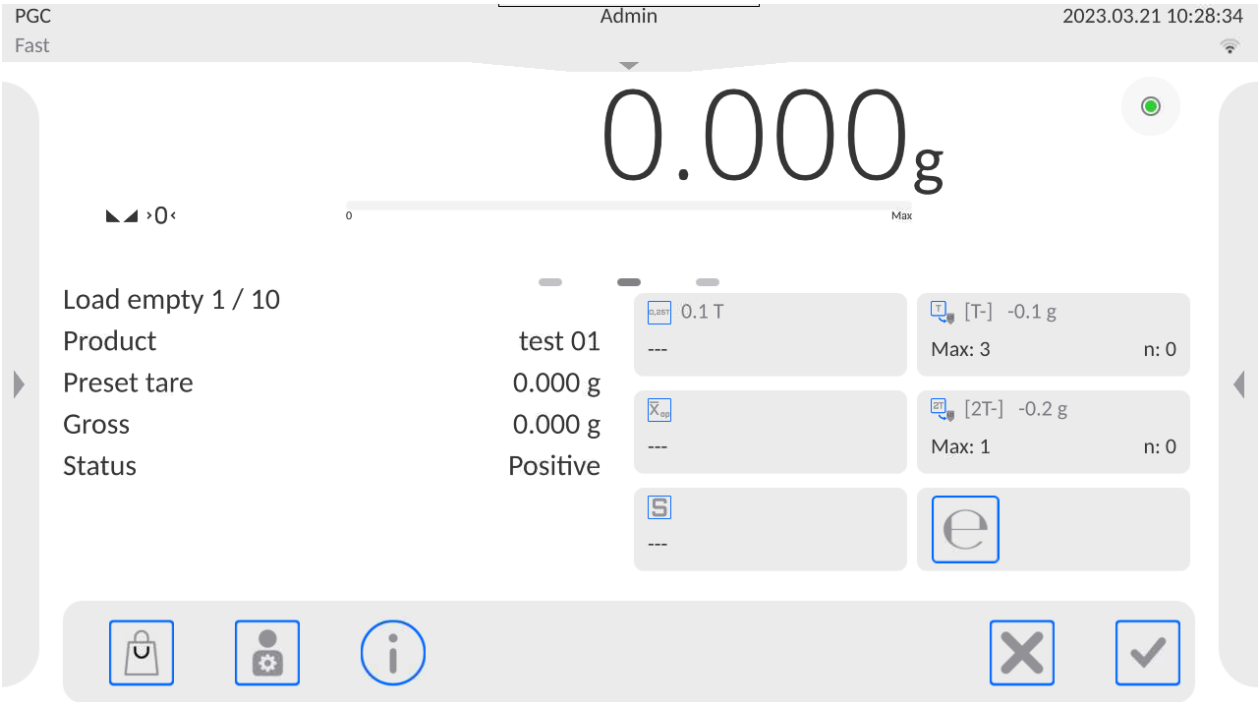

**Where:**

**Product**

- Product name.
- **0.25T** condition value, given in [g].
- Average mass of a packaging, given in [g].
- Standard deviation.
- Characteristics of sample's negative **T-** errors
- Characteristics of sample's negative **2T-** errors
- Controlled packaging net weight
- Packaging tare.
- Packaging control status
- Command for process in progress with specified number of all packagings to be weighed
- Display of graph. Graph concerns control of mass only; while estimating the average tare value, the preview of packaging mass distribution is not possible.
- Information on control
- Abort control process

***Caution:***
*If a product is to be controlled by the* **"Non-destructive average tare"** mode, *then accordingly to Regulation, standard deviation* ***"S"*** *for its packaging mass, based on at least* ***10*** *measurements, cannot be lower than* ***0.1*** *and greater than* ***0.25*** *of the maximum permissible negative error* ***T****, for the nominal packaging mass. The range is set independently for each product in the products database.*

After the last packaging mass measurement has been performed, the following message is displayed:

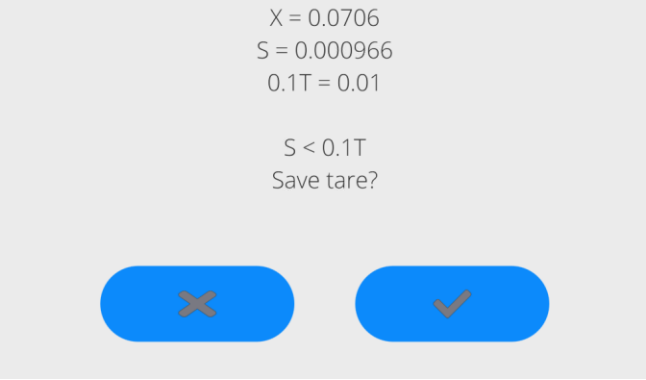


Press button to proceed to control without saving the newly estimated average packaging mass to the product data.
Press button to proceed to control with saving the newly estimated average packaging mass to the product data.

Measurement results are analysed continuously during control and displayed in respective fields:

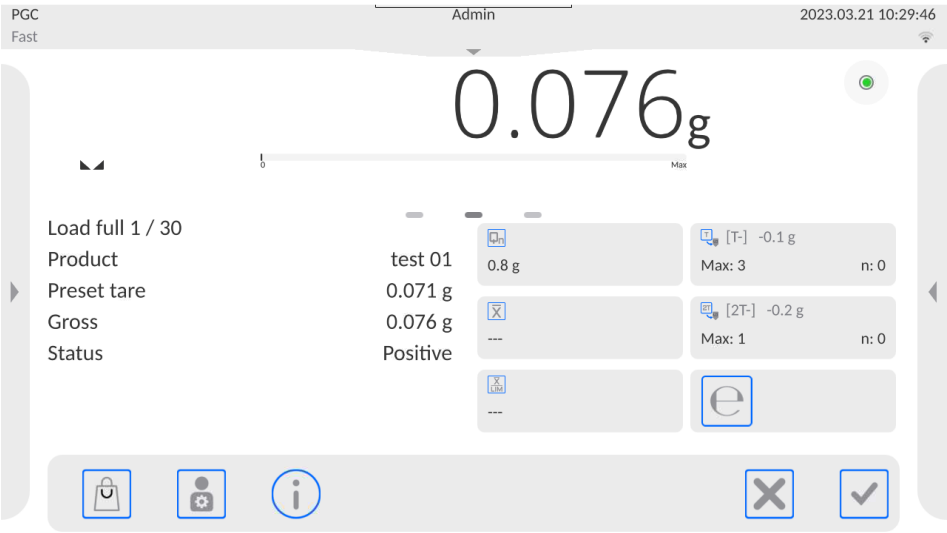


**Where:**

**Product**
- Controlled product name.
- Nominal value of the controlled product.
- Average mass of the controlled product.
- Disqualifying average value.
- Characteristics of sample's **T-** negative errors:
  **-0,2g** - value of **T-** negative error,
  **T Max** - permissible quantity of **T-** negative error,
  **n** - actual quantity of **T-** negative errors.
- Characteristics of sample's **2T-** negative errors:
  **-0,4g** - value of **2T-** negative error,
  **2T Max** - permissible quantity of **2T-** negative errors,
  **n** - actual quantity of **2T-** negative errors.
- Net weight of the controlled product.
- Packaging tare.
- Control status: positive, negative.
- Prompt regarding process course.
  Command specifying number of all measurements to be done for a given batch.
- Display of numeric data/graph.
- Information on control / results of performed control.
- Abort control process.

- **Control status**

The control status features a graphical interpretation:

- positive,

- negative (control of sample 2 permitted)

- negative.

For status respective field turns to yellow:

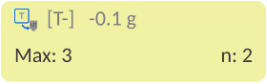


- yellow warns that occurrence of another **T-** error will end with a negative result of control.

For status respective field turns to red:

- average mass of controlled product is lower than the disqualifying average value.

- **Workspace**

To enable display of the measurement results in a form of graph, press button.

To disable display of the measurement results in a form of graph press button again.

- **Information on the control process**

Press button to display a window with information on control settings:

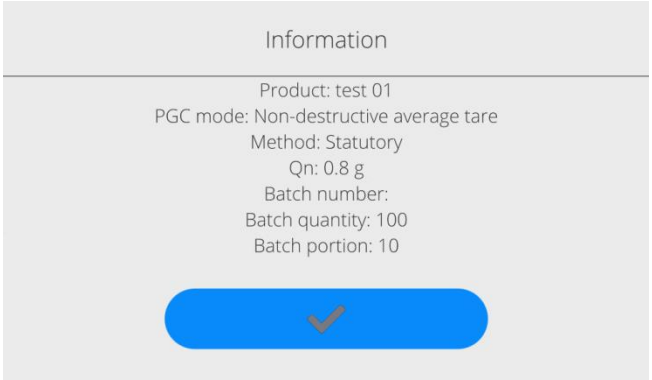


Control in-progress window:

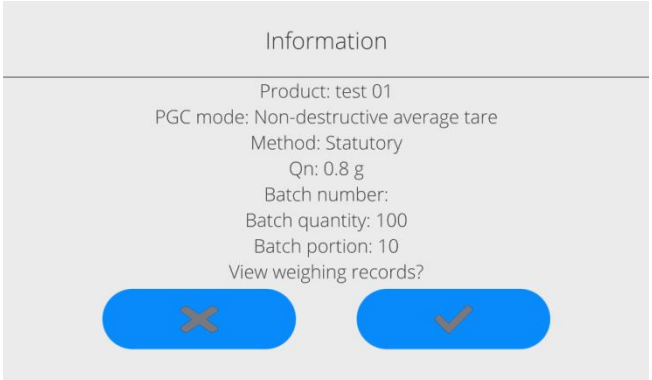

Press button to display a window with measurements carried out for an ongoing control:

Upon control completion, a summary of the process is generated; the control is automatically saved to database:

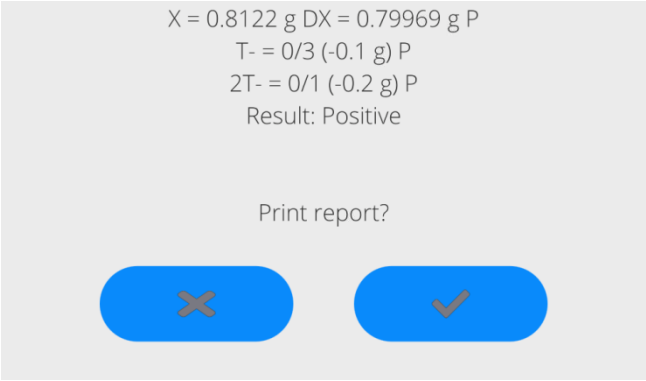


Press button to print report using connected printer. Press button to return to the **<PGC>** mode settings without printing the report.

***Caution:***
*In the case of connection with **<E2R System>** software, the control process summary does not contain 'Print report?' question. All data is automatically sent to the computer software; the report may be printed using a computer.*

If the quantity of **T** negative errors detected by the software during the control of sample 1 shall require (as specified by the regulation on PGC) sample 2 to be controlled, then upon sample 1 measurement completion, the following message is displayed:

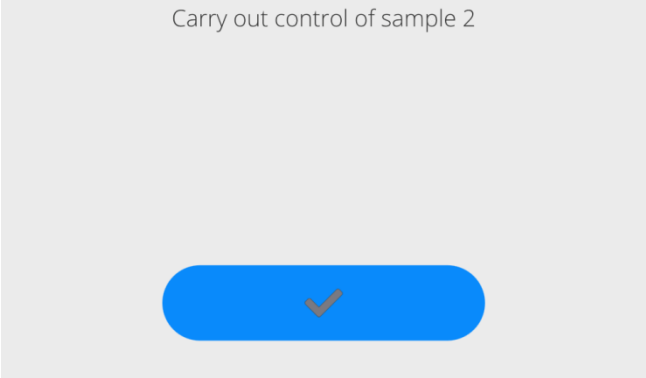


Press button to confirm. The text and the quantity of max permissible errors get updated. Upon completed control of sample 2, the software generates a control summary. Report on performed control may be printed on a balance-connected printer.

***Caution:***
*The template and examples of the average tare determination and PGC reports are to be found further down this user manual.*

### 26.8. Non-Destructive Empty-Full Control Mode

When you use the **Non-destructive empty-full** mode, set lot (**batch portion**) value, to do it enter product data. A message asking you to weigh empty packages first, full next in the same order, is displayed.

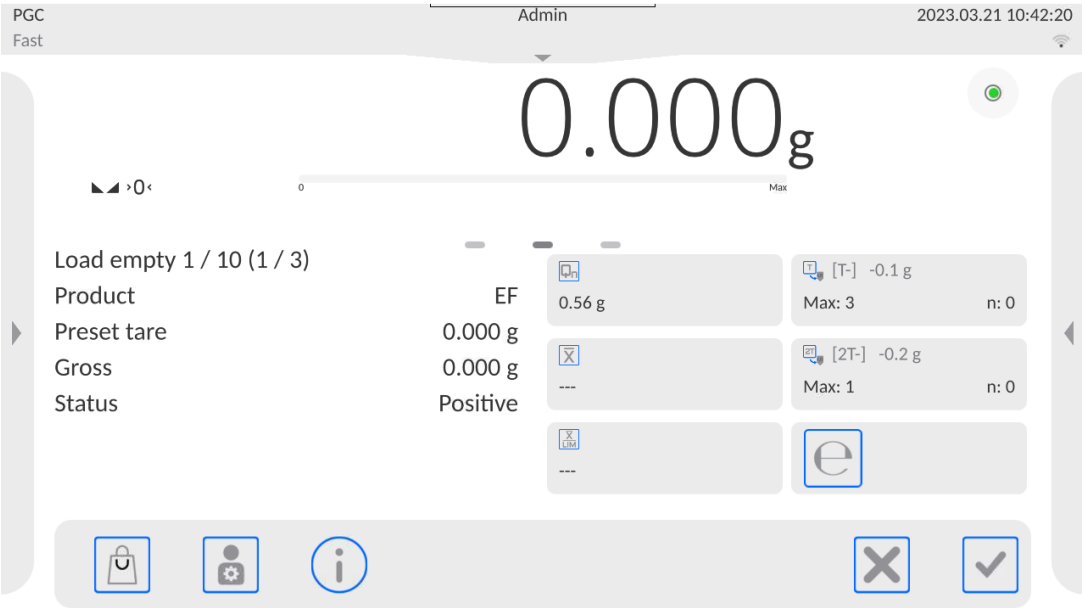


**Where:**

**Product** - Controlled product name.
**Code** - Code of the controlled product.
- Nominal value of the controlled product.
- Average mass of the controlled product.
- Disqualifying average value.
- Characteristics of sample's **T-** negative errors:
- Characteristics of sample's **2T-** negative errors:
- Net weight of the controlled product.
- Packaging tare.
- Control status.
- Prompt regarding process course. Command specifying value of batch portion.
- Display of numeric data/graph.
- Abort control process.

Upon control completion, a report is generated and the control is automatically saved to the database.

***Caution:*** *The template and an example of a control report are to be found further down this user manual.*

## 26.9. Destructive Empty-Full And Full-Empty Control Mode

In the case of the **Destructive** control, for a lot exceeding 100 pcs, the sample set by the software for test is always 20 pcs. The other control-assessing criteria are set in accordance with the law regulations.

**Procedure:**
Select product from the list, set parameters for the destructive control and determine **batch portion** value.
Start destructive control; prompts helping you to go through the control process are displayed (as in the case of the controls described above).
Depending on the set control mode, the order of products to be weighed is either: **empty-full** or **full-empty**.

***Caution:***
*It is necessary to weigh empty packages in the same order as packages filled with product. With this, software correctly calculates mass of a load placed in its corresponding packaging.*

Upon control completion, summary of the process is generated and the control is automatically saved to the database.

***Caution:*** *The template and an example of a control report is to be found further down this user manual.*

## 26.10. Control According To Internal Criteria

Select appropriate product with control data entered correctly in accordance with internal criteria (see: previous sections of this user manual).
Enter PGC mode parameters into balance memory (in accordance with user manual).
Press button to start control.
Measurement results are continuously analysed during the control and displayed in respective fields:

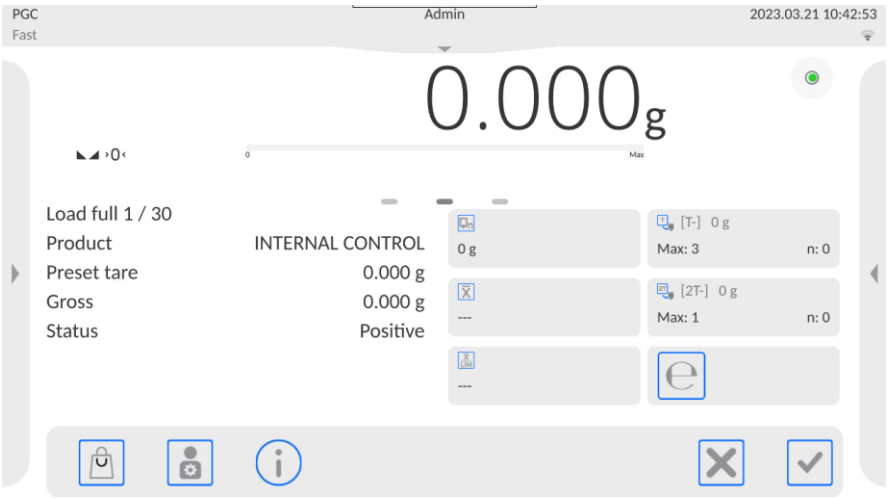


**Where:**

**Product** - Controlled product name.
**Code** - Code of the controlled product.
- Nominal value of the controlled product.

- Average mass of the controlled product.
- Disqualifying negative average value.
- Disqualifying positive average value.
- Characteristics of sample's **T-** negative errors (see: section 28.4 of this user manual)
- Characteristics of sample's **2T-** negative errors (see: section 28.4 of this user manual).
- Characteristics of sample's **T+** positive errors:
  **0,1g** - value of **T+** positive error,
  **T+ Max** - permissible quantity of **T+** positive errors,
  **n** - actual quantity of **T+** positive errors.
- Characteristics of sample's **2T+** positive errors:
  **0,2g** - value of **2T+** positive errors,
  **2T+ Max** - permissible quantity of **2T+** positive errors,
  **n** - actual quantity of **2T+** positive errors.
- Prompt regarding process course.
- Display of numeric data/graph.
- Abort control process.

Upon control completion, a report is generated and the control is automatically saved to the database.

***Caution:*** *The template and example of the control report are to be found further down this user manual.*

### 26.11. Reports

| *A report on determining average tare value* | | *A report on product control* | |
|---|---|---|---|
| Average Tare Report: U/07/05/13/13/37/T | | ----- PGC Report: U/06/05/13/14/17 ----- | |
| Balance type | XA 5Y | Balance type | XA 5Y |
| Range | 220 g | Range | 220 g |
| Reading unit | 0.001 g | Reading unit | 0.001 g |
| Balance S/N | 303 | Balance S/N | 303 |
| Date | 2013.05.07 13:37:30 | Start date | 2013.05.06 14:15:49 |
| Product | product 1 | End date | 2013.05.06 14:17:04 |
| Tare | 33.447 g | Operator | AAAAAA |
| Average tare coefficient | 0.25 | Product | product 1 |
| Average tare limit | 1.125 g | Batch number | 99 |
| Measurements quantity | 10 | Nominal mass | 100 g |
| Standard deviation | 0.00483 g | Tare | 33.447 g |
| Method | Statutory | T- error value | 4.5 g |
| | | 2T- error value | 9 g |
| Result | Positive | T+ error value | g |
| | | 2T+ error value | g |
| Measurements | | Batch quantity | 500 |
| 1. 33.440 g | | Measurements quantity | 30 |
| 2. 33.440 g | | T- errors quantity | 0 |
| 3. 33.440 g | | 2T- errors quantity | 0 |
| 4. 33.450 g | | T+ errors quantity | 0 |
| 5. 33.450 g | | 2T+ errors quantity | 0 |
| 6. 33.450 g | | Min | 98.579 g |
| 7. 33.450 g | | Max | 100.020 g |
| 8. 33.450 g | | Average | 99.72983 |
| 9. 33.450 g | | g | |

| | |
|---|---|
| 10. 33.450 g<br><br>---------- <br>Signature<br><br>..... | Sum 2991.895 g<br>Average limit [-] 99.70685 g<br>Average limit [+] g<br>Standard deviation 0.582804 g<br>PGC mode Non-destructive average tare<br>Method Statutory<br>Result Positive<br><br>Measurements<br>1. 100.008 g<br>2. 98.579 g<br>3. 98.582 g<br>4<br>.<br>30. 100.012 g<br>----------<br>Signature<br>..... |
| **Report template**<br>You can edit a template of a report on product control. To do it, enter **<Printouts/ Average tare report printout template>** section. Only variables with <YES> attribute are printed on a report. | **Report template**<br>You can edit a template of a report on product control. To do it, enter **<Printouts/ PGC report printout template>** section. Only variables with <YES> attribute are printed on a report. Note that here the user declares whether the measurements are to be printed, while what each measurement is to contain is declared in the **<Printouts/ <Weighing printout template>** group. |

# 27. MASS CONTROL

*(function disabled for standard balance models).*

<**Mass control**> is a working mode that allows you to control the mass of a product that is automatically dispensed onto the weighing pan using balance-connected PA-02 automatic feeder. The mode automatically controls a complete batch of tested product (batch quantity parameter must be declared).

## 27.1. Mass Control Global Settings

To enter the Mass control mode settings, slide out the menu on the left on the display and select "**Settings**" menu, which contains the following settings:

| | |
|---|---|
| Request batch number | The parameter requests a batch number before starting mass control process. |
| Batch quantity | The parameter determines quantity of a batch, i.e. number of product units to be controlled. |
| Print report | The parameter switches on/off automatic printout of a report upon mass control process completion. |
| Printout | The parameter enables selecting whether, upon control process completion, a standard or a non-standard printout is to be printed out. |

### 27.2. Mass Control Process

Prior to process start, carry out the following steps:

- Set batch quantity for mass control processes that are to be performed: Slide out the menu on the left on a display and select **<Settings>** parameter. Next, select **<Batch quantity>** parameter and enter quantity of units that are to be controlled in a current automatic mass control process. Press button to confirm.
- Set **<Min>** parameter, provide weight value lower than mass of the lightest controlled unit. Select such threshold value that will prevent saving the measurement on the final report when the dispensed element has lower mass than the smallest element in the controlled series (e.g. half of a pill). In the case of the above situation, if **<Min>** parameter is set correctly, weighing instrument's software omits such measurement and continues mass control process.
- Set **<Max>** parameter. Select such threshold value that will prevent saving the measurement on the final report when the dispensed element has greater mass than the biggest element in controlled series (e.g. two elements dispensed at the same time). In the case of the above situation, if **<Max>** parameter is set correctly, weighing instrument's software omits such measurement and continues mass control process.
- Set **<Dosing speed>** parameter, determined in [%] between 0% and 100%, and nominal mass, set limits for errors, with minus sign - <T4->; <T3->; <T2->; <T1->; <T1+>; <T2+>; <T3+>; <T4+>, and maximum quantity of particular errors' occurrence. Errors are set as percent of nominal mass (relative value) or in mass unit (absolute value). Dosing speed, mass values, Min and Max thresholds and errors are parameters specified individually for **each product**.

**Procedure**

Go to the home screen of the <**Mass control**> mode, press **SETUP** button, select **<Databases>** parameter first, enter **<Products>** database, select product for which the values are to be set. To enter error values and permissible quantity, go to Setup/Databases/Product/SQC parameter. Set required parameters and return to the home screen.

- Select controlled product from the products database.
- Set required parameters, press button to start automatic mass control.
- Automatic control is started. The weighing instrument is tared, and the feeder starts dispensing the first element onto the weighing pan.
- With the first element on the weighing pan, the feeder pauses, the element is weighed; the first stable measurement is carried out.
- The measurement is saved, the weighing instrument is zeroed, the next element is dispensed onto the weighing pan. The weighing process is carried out analogously.
- The cycle is repeated until all pieces determined for <Batch quantity> process are weighed.
- The following information is displayed during the control process:
  - Reference sample quantity
  - Product
  - Average,
  - Standard deviation
  - T1- errors quantity
  - T1+ errors quantity
- Upon completed measuring process of a particular batch, a report is generated, saved to the database and printed on a balance-connected printer.

***Caution:*** *Each control process can be aborted if necessary; to abort a process, press button. The process is stopped and control cancelled (no report is generated).*

### 27.3. Printouts

Printouts option enables you to determine the content of a particular standard printout, and to define a non-standard printout.

- **Standard printout** comprises four internal blocks, each containing different variables. Variable settings: YES - print; NO - do not print.

Settings for header, GLP, and footer printouts are specified in section 12.5. For settings for mass control report, read below. You can design report content.

***Caution:***
*In order to specify what measurement data is to be printed on a report, it is necessary to modify settings for <Weighing printout template> parameter. To enable particular measurement data printout, set <YES> value for it.*

Report content:

- Working mode
- Date
- Time
- Balance type
- Balance S/N
- Report no.
- Operator
- First and last name
- Product
- Start date
- End date
- Batch number
- Reference sample quantity
- Nominal mass
- T4- threshold
- T3- threshold
- T2- threshold
- T1- threshold
- T1+ threshold
- T2+ threshold
- T3+ threshold
- T4+ threshold
- Measurements
- T4- errors quantity
- T3- errors quantity
- T2- errors quantity
- T1- errors quantity
- T1+ errors quantity
- T2+ errors quantity
- T3+ errors quantity

- T4+ errors quantity
- Average
- Average [%]
- Standard deviation
- Standard deviation [%]
- Min
- Max
- Empty line
- Dashes
- Signature
- Non-standard printout

### 27.4. Performed Mass Control Report

Upon each completed mass control process, a report is generated. The report is saved to the **<Mass controls>** database. Report files are named by the date and time of a particular process performance.

## 28. DATABASES

The balance features the following databases:

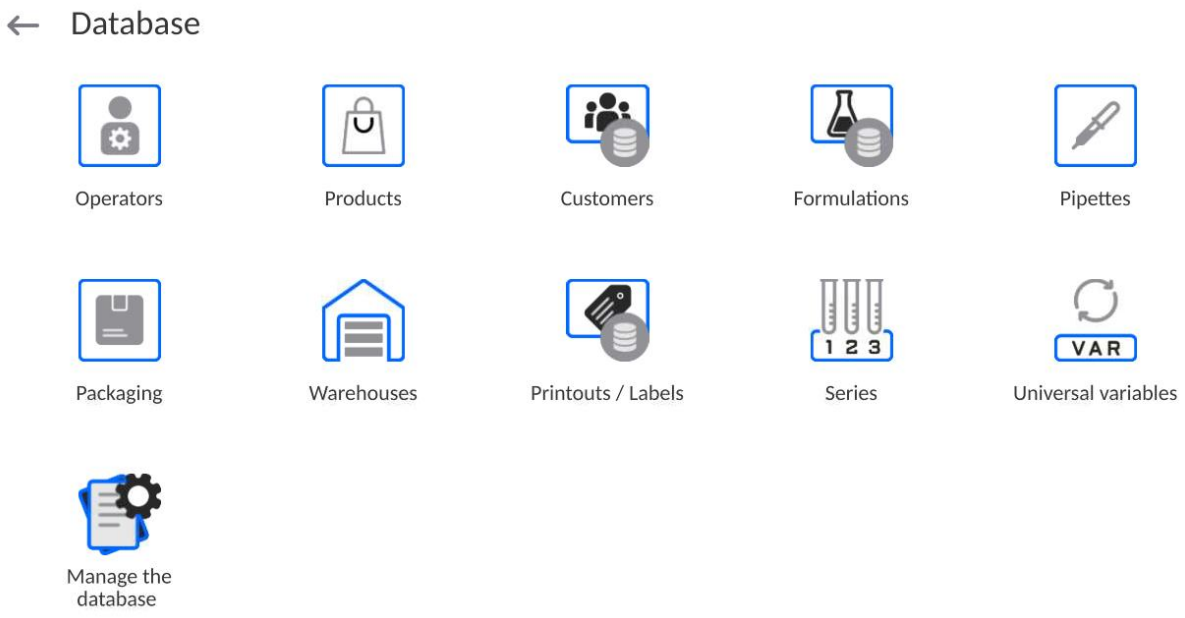


### 28.1. Database Operations

**Databases can be operated** only by an authorized personnel.
**Procedure:**

- Press and hold a respective database pictogram.
- Database menu is displayed.
- Select one of the available entries (entries set is conditioned by a database).

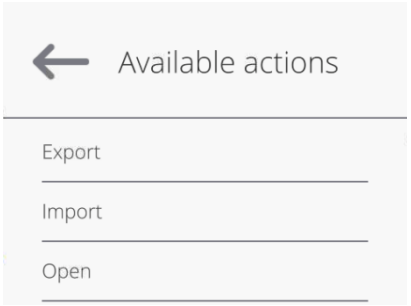


Entries:

- EXPORT - select to export data from a selected database to a USB flash drive. Plug the USB flash drive to a USB port; upon its detection, the software automatically starts a copying process. Upon completion of the copying process, a window with both, a file name to which data have been saved and message: <Completed> is displayed. Confirm completion.
- IMPORT – select to import data from a USB flash drive. Plug the USB flash drive to a USB port; upon its detection, a window with a list of saved files is displayed. Select file with data to be imported. The copying starts automatically. Upon completion of the process, message: <Completed> is displayed. Confirm completion.
- OPEN – select to enter a database (alternative method for database entering: single click on a given database field).

List of typical database operations:

1. Adding entry to a database.
2. Searching for a record in a database by name.
3. Searching for a record in a database by code.
4. Searching for a record in a database by date.
5. Exporting database content to a USB flash drive via USB port.
6. Printing data on a specific record in a database.

The above processes are initiated by dedicated buttons located on the top of the display. Follow the displayed commands.

### 28.2. Operators

Operators database features list of users permissioned to operate the balance.
The following data can be defined for each balance operator:

| | |
|---|---|
| ID | Name |
| Code | Password |
| First and last name | Permissions |
| Active account | Language |
| Default profile | Card number |
| Theme | |

***Caution: Only a user with Administrator status can add new operators or delete operators from the database.***

In order to add an operator:

- Enter <Operators> menu, press <> button.
- Define all necessary data.

***Caution:*** *It is possible to search for an operator in a database of operators by code or name.*

## Log in using a transponder card:

***Caution:*** *The RFID reader mounted in the indicator operates at a frequency of 13.56MHz and complies with ISO/IEC 14443 Type A.*
*Only cards of this standard will be recognised by the reader.*

- Enter Operator settings.
- Select <Card no.>

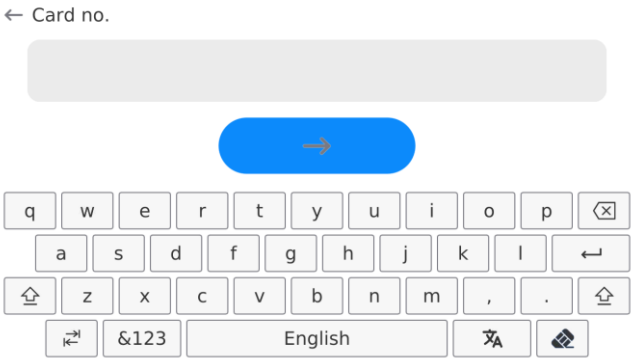


- Apply the card to the RFID reader.
- The card number is automatically entered in the editing field.

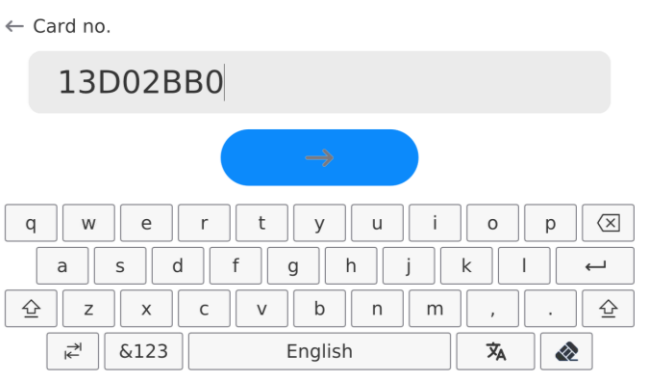


- Press button, the card number is added to the operator settings.

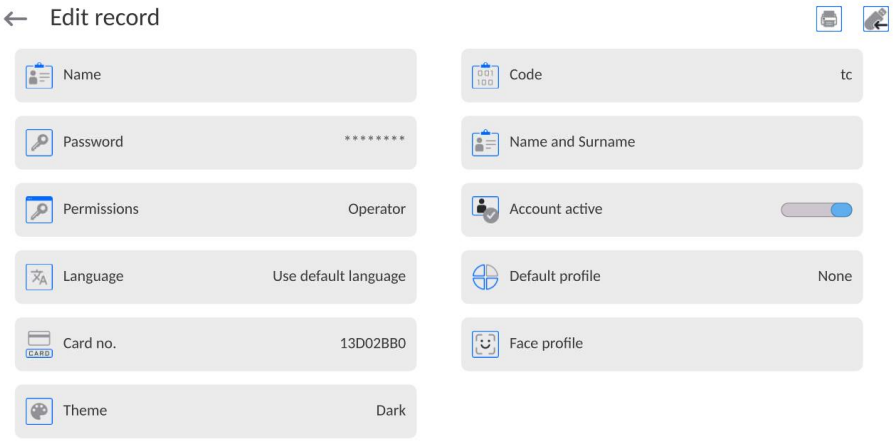


- Exit to the home screen. From now on, applying this card to the RFID reader will automatically log the user in.

## Log in using a fingerprint:

***Caution:*** *Only the fingerprint reader listed as a dedicated accessory for these balances can be connected to the balance. A list of accessories can be found on RADWAG website.*

- When the fingerprint reader is connected to the USB type A socket, the <Fingerprint> option appears in the operator settings menu.

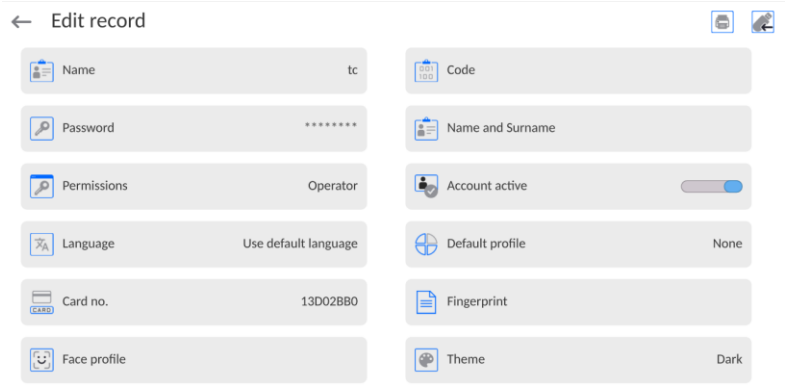


- To add a fingerprint for an operator, enter this option.

- Scan the fingerprint and repeat the procedure 7 times (as described in the message box).
- When the procedure is completed correctly, a summary window is displayed.

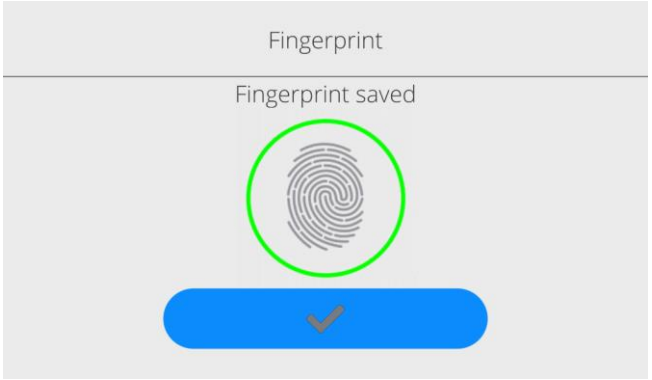


- Confirm the procedure by pressing button.
- From now on, if a fingerprint reader is connected to the USB port, a pictogram of the active fingerprint login option is displayed in the login window.

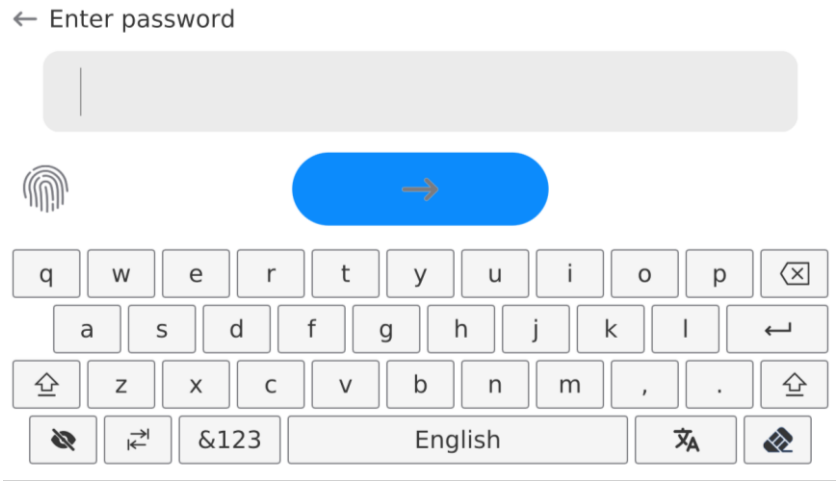


- After placing a finger on the reader and confirming the correctness of the fingerprint with the stored pattern, the pictogram briefly turns green, the user is automatically logged in, and the software switches to the home screen. The name of the logged-in user is displayed in the top bar of the window.
- If the scanned fingerprint does not match the stored pattern, the pictogram briefly turns red, the user is not logged in, and the software displays the login window.

**Log in using a face profile:**

- To add a face profile for a user, go to the option presented below

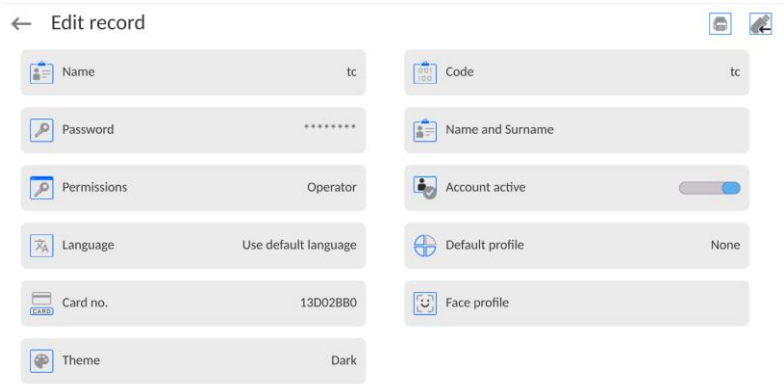


- After starting the option, a message is displayed and the face profile is read; you must position yourself correctly in relation to the camera so that the program can save the profile.

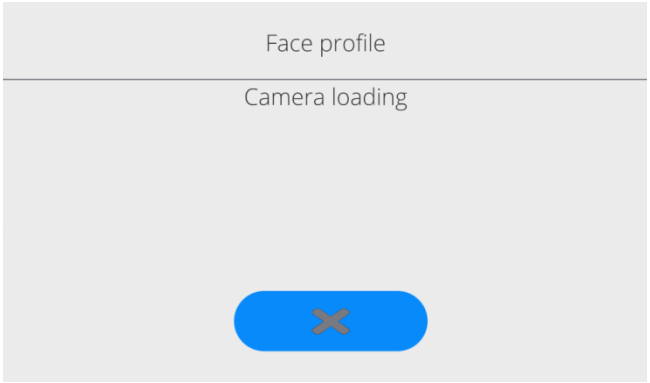


- Once the profile has been saved, a message is displayed along with a picture from the camera.

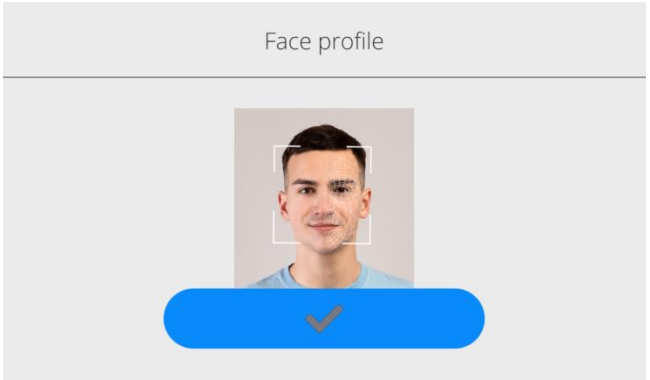


- Press button to close the widow.
- The option description in the user settings changes to <Delete face profile>, indicating that the profile is stored in the balance memory.

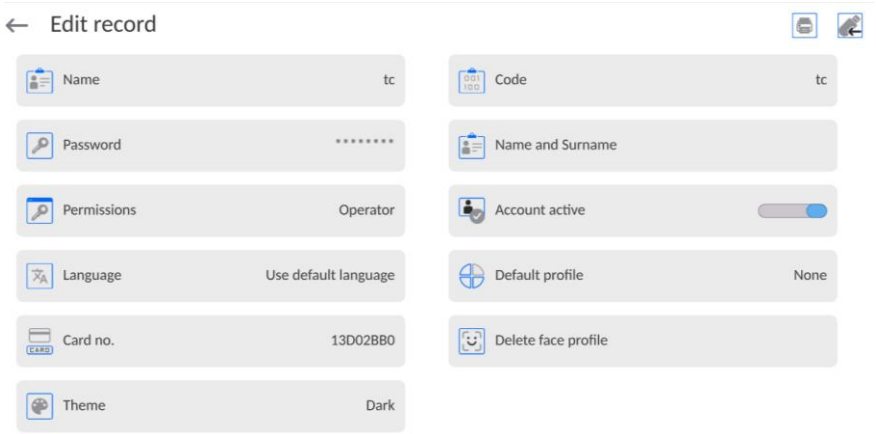


- From now on, if the user for whom the face profile was added logs in, after entering the logging window, the program will automatically read the profile, which will be signalled by the pictogram on the left side of the window

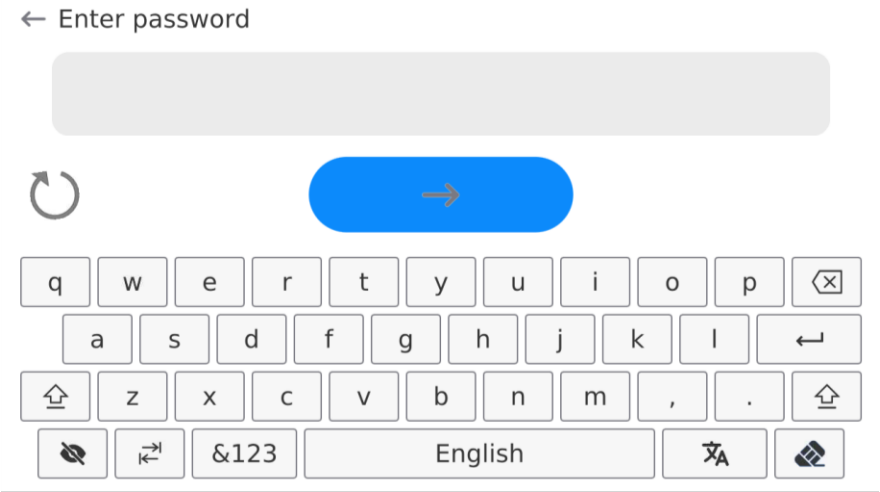


- The program automatically reads a photo of the user's face profile, and after the photo is read, the camera turns on (which is indicated by the lighting of a diode next to the camera) and compares the saved photo with the profile read by the camera. If these images match, the main program window will open and the name of the logged-in user is displayed in the top bar of the window.

**Editing data** on an operator:

- Press field with operator name.
- Data on a specific operator is displayed.
- Select and change necessary data.

**To delete** an operator:

- Press and hold operator name.
- Database menu is displayed.
- Select <Delete> parameter and confirm.

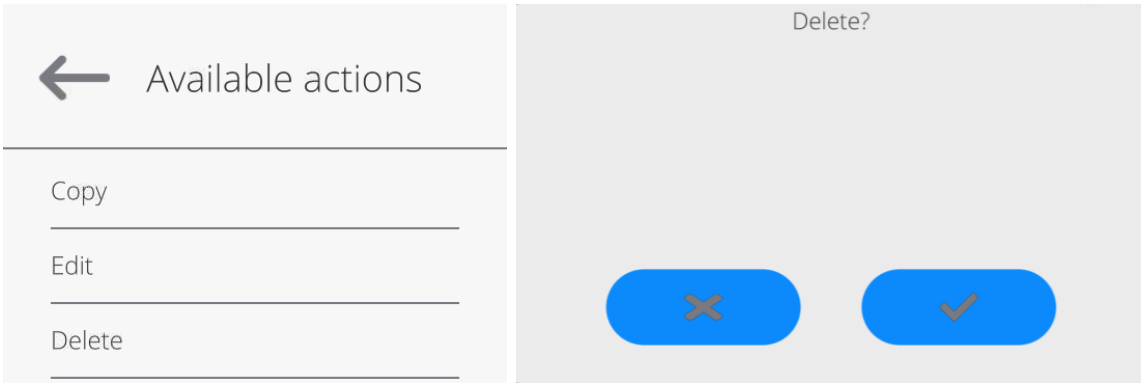


### 28.3. Products

<Products> database contains names of all products that are weighed, counted or controlled.

**Procedure:**

- Enter <Databases> submenu, press <Products> entry.
- Press <Add> button to add a new product to the database, or
- Select the already existing product.

**List of parameters defined for a product:**

| | | |
|---|---|---|
| 1. | ID | [Unique product number] |
| 2. | Name | [Product name] |
| 3. | Description | [Product description] |
| 4. | Code | [Product code] |
| 5. | EAN code | [Product EAN code] |
| 6. | Mass | [Unit mass of a product] |
| 7. | Dosing speed | [Option available for the <Mass control> mode; determines feeder dosing speed in [%] (0% - 100%).The value of dosing speed is conditioned by the size, shape and mass of dispensed parts (pills); it has to be determined by tests] |
| 8. | Min | [Minimum mass for weighing the product using result control thresholds – LO. Value of <T1-> error for <Mass control> mode determined as percent of the nominal mass] |

| | |
|---|---|
| 9. Max | [Maximum mass for weighing the product using result control thresholds – HI. Value of <T1+> error in the <Mass control> working mode determined as percent of the nominal mass] |
| 10. Tolerance | [% value calculated versus mass (5), denoting measuring area in which the measurement is recognized as correct.] |
| 11. Tare | [Product's tare value, set automatically on selecting a product from the database] |
| 12. Price | [Unit price of a product] |
| 13. PGC mode | [Control mode: Non-destructive average tare, Non-destructive empty – full, Destructive full – empty, Destructive empty –full.)] |
| 14. Batch portion | [Measuring batch for control: Non-destructive empty - full, Destructive full – empty, Destructive empty –full.] |
| 15. SQC: Unit | [Product measuring unit] |
| 16. Batch quantity | [Option available only for the <PGC> mode; specifies the quantity of controlled product batch] |
| 17. Interval of average tare determination | [Option available only for the <PGC> mode; specifies the minimum time interval needed for estimation of a packaging average tare; given in [h]; if the software detects that pre-set time interval has passed, it displays a message: <**Estimate average tare**>. The message has an informative character and you can decide whether to carry out the process or not.] |
| 18. Packages quantity | [Option available only for the <PGC> mode; specifies the number of packagings needed for estimation of the average tare] |
| 19. Internal control | [Option available only for the <PGC> mode; allows for specification of internal control criteria accordant with company standards for a given product] |
| 20. SQC | [Option available only for the <SQC> and <Mass control> modes; allows for specification of internal control criteria accordant with company standards for a given product] |
| 21. Density | [Product density, used as a sample density for compensating air buoyancy] - [g/cm$^3$] |
| 22. Shelf-life time in days | |
| 23. Date | [Product date (constant)] |
| 24. VAT | [VAT value related to a product] |
| 25. Ingredients | [Field for inserting names of product's ingredients or for additional description regarding product's features, application, etc.] |
| 26. Printout | [Template assigned to a product] |

***Caution:*** *Remember to assign products to corresponding functions, as some of the data values are attributed according to their modes, e.g. thresholds in <Checkweighing> mode are set in [g], while thresholds in <Parts counting> mode are set in [pcs]. The values are selected automatically depending on which mode is enabled while entering a database.*

### 28.4. Customers

Customers database contains name of Customers for whom the measurements are carried out.

**Procedure:**

- Enter <Databases> submenu and press <Customers> entry.
- Press <Add> button.
- Select the already existing customer.

**List of parameters defined for a customer:**

1. Customer name
2. Customer code [internal code identifying a customer]
3. TIN
4. Address
5. Postal code
6. City
7. Discount
8. Printout [type of printout, customer-related label]

### 28.5. Formulations

Formulations database stores all created recipes. The recipes can be carried out automatically.

**Procedure:**

- Enter <Databases> submenu and press <Formulations> entry.
- Press <Add> button to add a new formulation, or
- Select the already existing formulation.

**List of parameters defined for series:**

1. Name
2. Code
3. Ingredients
4. Ingredient quantity
5. Sum

### 28.6. Pipettes

Pipettes database contains data of pipettes that are to be calibrated.

**Procedure:**

- Enter <Databases> submenu and press <Pipettes> entry.
- Press <Add> button to add a new pipette, or
- Select the already existing pipette.

**List of parameters defined for pipettes:**

1. Name
2. Code
3. Model

4. Tip
5. Volume type
6. Nominal volume
7. Minimum volume
8. Channels quantity
9. Type
10. Tested volumes

### 28.7. Minimum Sample

Minimum sample database contains data concerning declared methods and minimum samples.

***Caution:*** *Only authorized RADWAG personnel can add new minimum sample records or make changes in those stored in the database.*

**Procedure:**

- Enter <Databases> submenu and press <Minimum sample> entry.
- Press <Add> button to add a new minimum sample, or
- Select the already existing weight.

**List of parameters defined for a minimum sample:**

1. Name - name of a method used to determine minimum sample.
2. Code - method code.
3. Description - method overview.
4. Subsequent control - a field for entering expiry date of the minimum sample. Two weeks before the expiry date, a pictogram of a clock is displayed next to the status pictogram. The clock pictogram informs on elapsing validity date. Contact RADWAG representative to carry out necessary changes in minimum sample settings.
5. Thresholds – parameter for entering minimum sample data and range of packaging mass (tare) with applicable criteria:
   **Tare** – maximum tare value, for which the minimum sample is obligatory. You can enter three characteristic quantities: 0.000g, optional mass value from weighing instrument's measuring range, and maximum capacity (see: examples below).
   **Minimum mass –** value of the minimum sample determined for a particular weighing device on site using respective methods.

***<u>Example no. 1 XA 220.5Y balance with d=0.0001 g</u>***

List of MS values determined for the following packaging values:

| *No.* | *Tare value* | *Minimum sample* | *Overview* |
|---|---|---|---|
| 1 | 0.0000 g | 0.1000 g | Minimum sample refers to all net weight values when weighing is carried out without use of a tare container (<TARE> button NOT used). |
| 2 | 10.0000 g | 1.0000 g | Minimum sample refers to all net weight values when weighing is carried out using a tare container of mass ranging from 0.0001 g to 10.0000 g inclusive (<TARE> button used). |

| | | | |
|---|---|---|---|
| 3 | 50.0000 g | 2.5000 g | Minimum sample refers to all net weight values when weighing is carried out using a tare container of mass ranging from 10.0001 g to 50.0000 g inclusive (<TARE> button used). |
| 4 | 200.0000 g | 4.0000 g | Minimum sample refers to all net weight values when weighing is carried out using a tare container of mass ranging from 50.0001 g to 200.0000 g inclusive (<TARE> button used). |

***Example no. 2 XA 220.5Y balance:***

| *No.* | *Tare value* | *Minimum sample* | *Overview* |
|---|---|---|---|
| 1 | 220.0000 g | 0.5000 g | Minimum sample refers to all net weight values when weighing is carried out using a tare container of mass value comprised within the whole weighing range (<TARE> button used), and to all net weights that are weighed without a packaging (the <TARE> button not used). |

***Example no. 3 XA 220.5Y balance:***

| *No.* | *Tare value* | *Minimum weight* | *Overview* |
|---|---|---|---|
| 1 | 0.0000 g | 0.2500 g | Minimum sample refers to all net weight values when weighing is carried out without use of a tare container (<TARE> button NOT used).<br>In case of such settings, the minimum sample is valid only when you weigh samples without use of tare containers. If taring function is used, then pictogram informing on use of minimum sample goes blank and the software carries out weighing with tare (no determined minimum sample). |

You can preview the entered data, but you are not allowed to edit it.

### 28.8. Packaging

<Packaging> database contains a list of packages for which a name, code and mass value are specified. The tare value is automatically applied when a name of a packaging is selected from the database during weighing process. The tare value is displayed with minus sign.

**Procedure:**

- Enter <Databases> submenu and press <Packaging> entry.
- Press <Add> button to add a new packaging, or
- Select the already existing one, and insert data on the packaging.

***Caution:*** *It is possible to use 'search record' option; you can search by name or by code.*

### 28.9. Warehouses

Depending on the organization of work, the warehouses database contains a list of places used for picking up a sample for weighing or a list of places to which a weighed sample was delivered. Each warehouse has to have its name, code and description specified. During the weighing process, and upon selecting the name of a warehouse, it is automatically assigned to the measurement result.

**Procedure:**

- Enter <Databases> submenu and press <Warehouses> entry.
- Press <Add> button to add a new warehouse, or
- Select the already existing warehouse.

***Caution:*** *It is possible to use 'search record' option, you can search by name or by code.*

### 28.10. Printouts

Printouts database contains all NON-STANDARD printouts. Each printout features a name, code and a template.

**Procedure:**

- Enter <Databases> submenu and press <Printouts> entry.
- Press <Add> button to add a new printout, or
- Select the already existing record.

***Caution:*** *It is possible to use 'search record' option; you can search by name or by code.*

**Designing new printout template**

**Procedure:**

- Enter <Databases> submenu and press <Printouts> entry.
- Press <Add> button to create a new printout, or edit the already existing one.

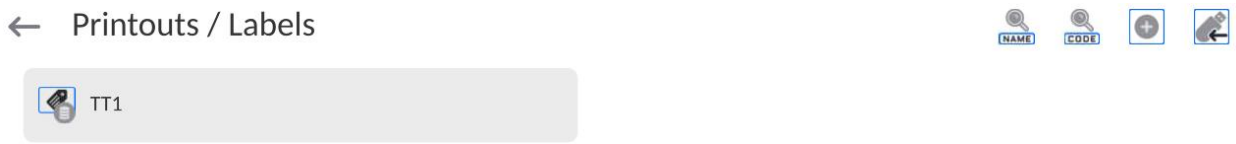


- Edit box opens, press <Project> entry.
- Respective box with an on-screen keyboard is displayed.
- To design a printout, you can use an external USB keyboard connected to the head or a touch keypad that has the same functions as a typical PC keyboard.

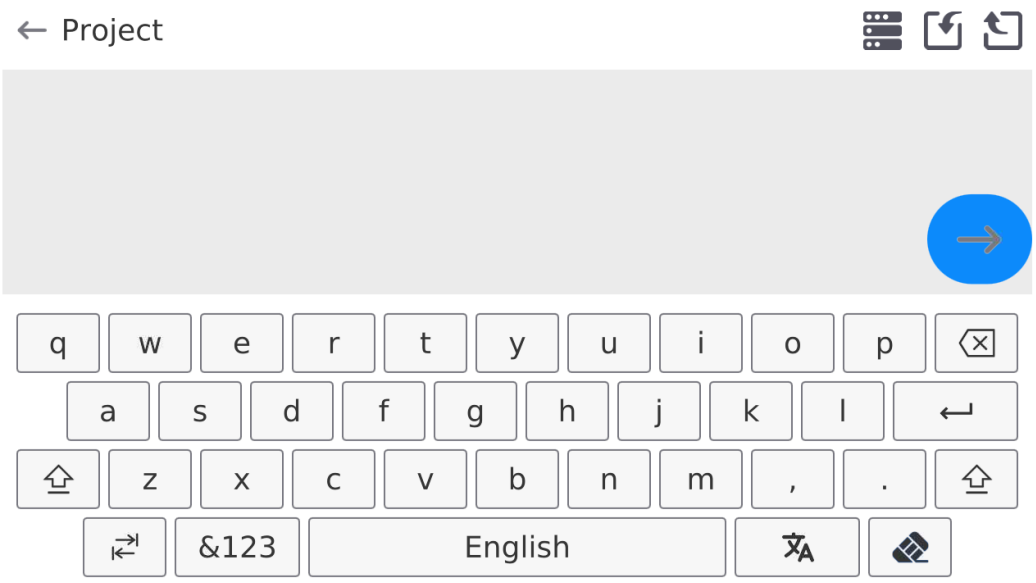


The touch keypad does not have some characters, such as a colon or diacritical letters typical of a specific menu language (menu language is signalled with description on ‘SPACE’ key). To use such characters or letters in the designed printout, press and hold the specific letter on the keyboard. It will cause additional keys with assigned characters to display. Click them to add to text. After entering the character, press ‘X’ to disable displayed characters.
The example of available characters for Polish keyboard.

| Letter on the keyboard | Additional characters | Letter on the keyboard | Additional characters | Letter on the keyboard | Additional characters |
|---|---|---|---|---|---|
| **„t”** | | **„u”** | | **„a”** | |
| **„x”** | | **„c”** | | **„v”** | |
| **„b”** |  | **„,”** |  | **„.”** | |

- Save the designed printout.

**Example of Printout no. 1 – large edit box**

*Project*

Balance no. 400015
Balance parameters:
Max = 220 g
d= 0.001 g

Product name:
Date: 2011.10.24
Time: 11:48:06
---
Working mode: Weighing
---
Net weight: 94.147

Carried out by: Admin

*Printout template*

**Example of Printout no. 2 – printout from a file**

All printout templates can be designed in a form of external files, that are imported to a balance; file extension: *.txt or *.lb. External file shall contain all constant and variable data. Upon importing, the content of a printout template can be modified.

**Procedure:**

- Design a *.txt or *.lb file in an optional editor.
- Copy the file to a USB flash drive.
- Connect the USB flash drive to the balance USB port.
- Press [4] <Download a printout from a file> button,
- Balance display shows data stored on the USB flash drive connected to the USB port.
- Select file with a printout template and press its name.
- The printout template is automatically copied to an editing field.

| | |
|---|---|
| | ***The user may add printouts from external memory via import of already configured texts, using USB port.*** |
| | ***Printout name is not the content of a printout.*** |
| | ***List of variables intended for printouts is to be found in 'ANNEX 03'.*** |
| | ***Example of how to create and send label template to the balance memory is to be found in 'ANNEX 03'.*** |

### 28.11. Series

Series database contains series data and sample measurements.

**Procedure:**

- Enter <Databases> submenu and press <Series> entry.
- Press <Add> button to add a new series, or
- Select the already existing series.

**List of parameters defined for series:**

1. Name
2. Code
3. Customer
4. Samples
5. Samples quantity

### 28.12. Universal Variables

Universal Variables are alphanumeric data which can be combined with printouts, products or other comparison-related information. Each variable has to have its name, code and value specified.

**Procedure:**

- Enter <Databases> submenu and press <Universal variables> entry.
- Press <Add> button to add new variable, or
- Select already existing universal variable, and modify the following fields: code, name, value.

***Caution:*** *It is possible to use 'search record' option; you can search by name or by code.*

### 28.13. Databases Management

Function allowing to manage databases data. It comprises three options: Export weighing database, Delete databases and Delete weighings and reports.

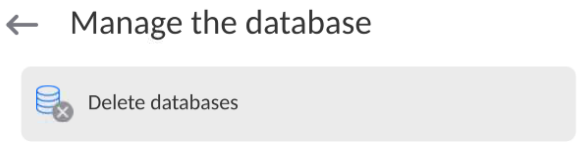


#### 28.13.1. Delete Databases

Function allowing to delete data of selected database. Procedure Activate <Delete database> function; a window with database list is displayed.
Select a database, delete respective data.

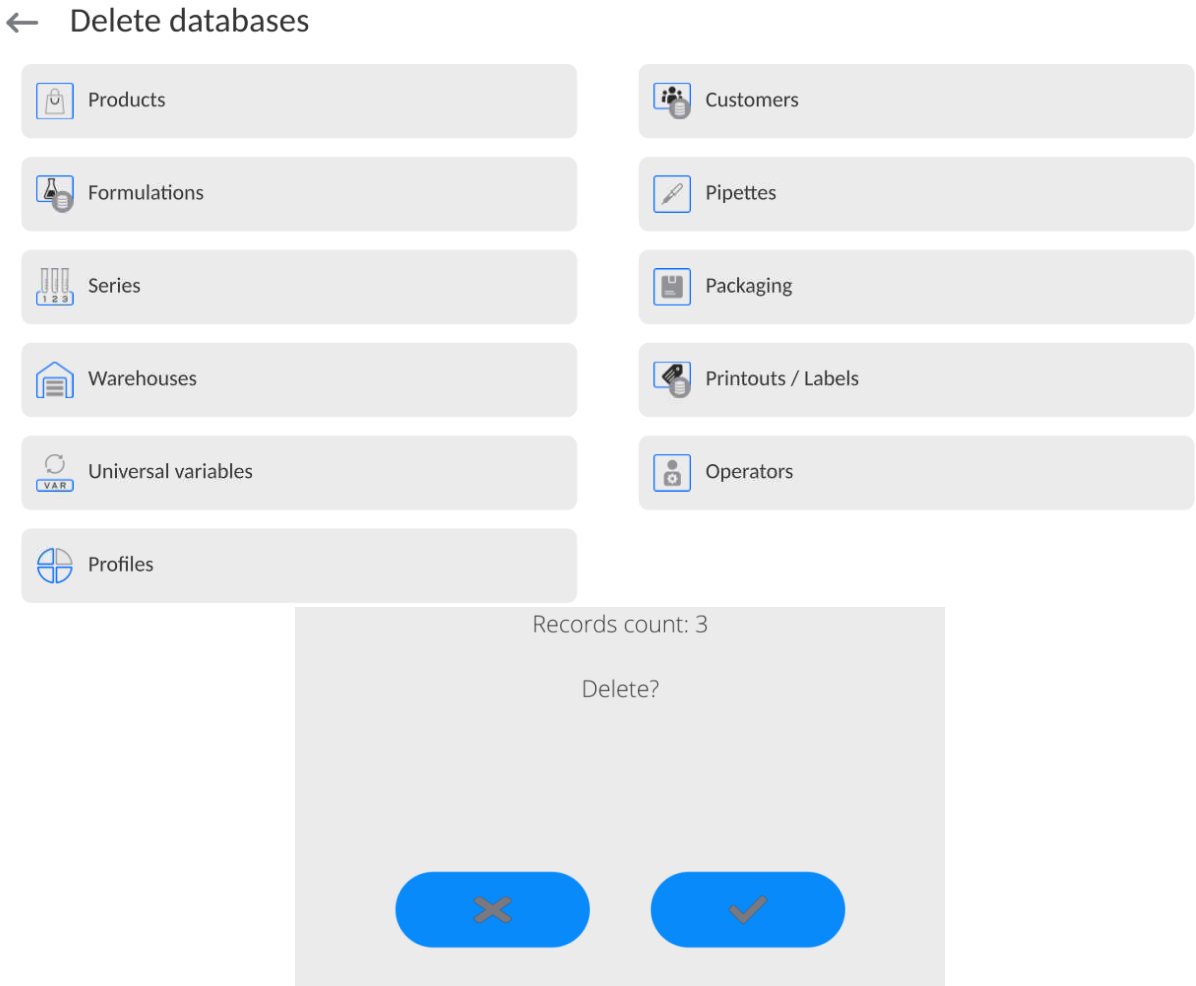

Confirm, data is deleted, the following message is displayed:

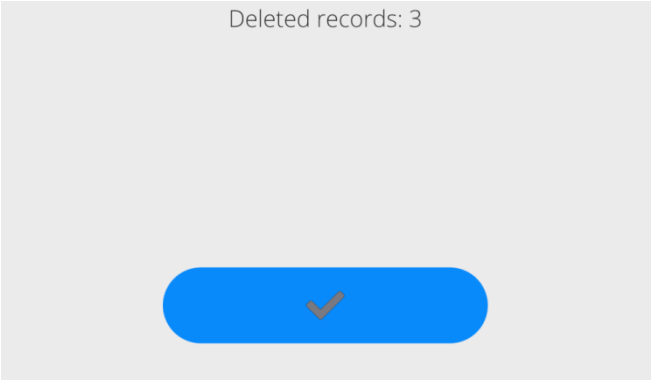


Confirm, a previous window is displayed; you may continue weighing or proceed to other operations.

# 29. REPORTS

The balance features the following reports:

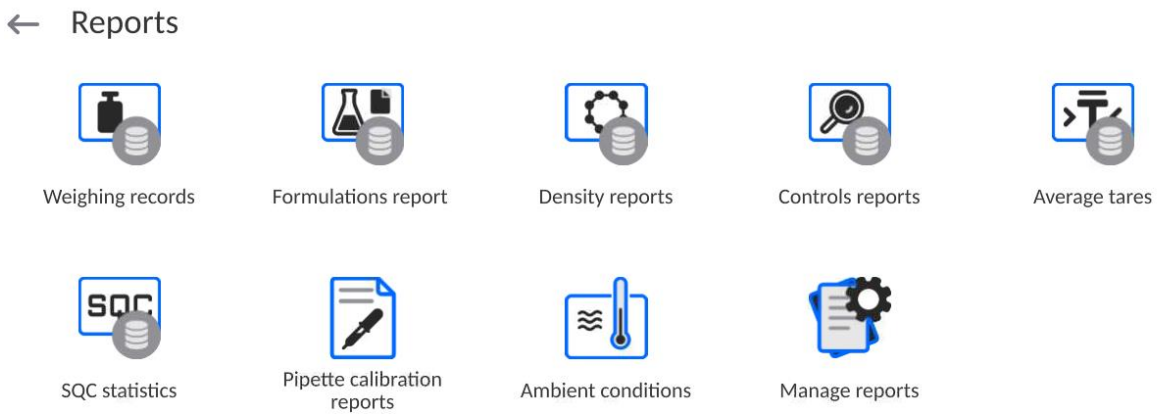


## 29.1. Reports Operations

**Reports can be operated** only by an authorized personnel.

**Procedure:**

- Press and hold a respective database pictogram.
- Database menu is displayed.
- Select one of the available entries (entries set is conditioned by a database).

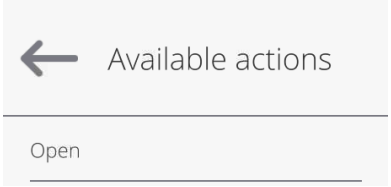


Entries:

- OPEN – select to enter a database (alternative method for database entering: single click on a given database field).

List of typical reports operations:

1. Searching for a record in a database by name.
2. Searching for a record in a database by code.
3. Searching for a record in a database by date.
4. Exporting database content to a USB flash drive via USB port.
5. Printing data on a specific record in a database.

The above processes are initiated by dedicated buttons located on the top of the display. Follow the displayed commands.

### 29.2. Weighings

Each weighing result sent from the weighing device to a printer is saved to the weighings database (read section *Result control*).
You can preview data of particular weighing records.
**Procedure:**

- Enter **<Reports>** submenu.
- Enter **<Weighings / Alibii>** database and select desired record.

**List of parameters defined for a weighing record:**

1. Measurement date.
2. Measurement result.
3. Tare value.
4. Stable/unstable measurement marking.
5. Air buoyancy control on/off marking.
6. Product name.
7. Operator.
8. Customer, customer name.
9. Working mode name.
10. Warehouse, source warehouse name.
11. Packaging, name of tare applied during product weighing.
12. Result control, information regarding range within which the weighed product is placed:
    MIN – below LOW threshold (possible only if <Result control> is set to <NO> value),
    OK – between the LOW and HIGH thresholds,
    MAX – above HIGH threshold (possible only if <Result control> is set to <NO> value).
13. Weighing platform no., field with number of a weighing instrument by means of which a measurement was carried out.
14. Level status, information on level status maintained during the measurement.
15. Ambient conditions alerts, information regarding stability of temperature and humidity during the measurement.

### 29.3. Formulations Reports

Formulations reports provide information about carried out formulations. Each report can be previewed, searched by name, date, code or exported and printed out.

**Procedure:**

- Enter <**Reports**> submenu and press <Formulations reports> entry.
- Select report, if not visible, scroll using navigation buttons.
- Report is named by date and time; e.g. 2011.10.12 15:12:15.

***Caution:*** *It is possible to use <Search report> option.*

**List of formulation reports data:**

1. Start date
2. End date
3. Formulation
4. Sum
5. Target value
6. Operator
7. Customer
8. Warehouse
9. Measurement quantity
10. Status

### 29.4. Density Reports

Density reports provide information about carried out density determination processes of solids, liquids and air. Each report can be previewed, searched by name, date, code or exported and printed out.

**Procedure:**

- Enter <**Reports**> submenu and press <Density reports> entry.
- Select report, if not visible, scroll using navigation buttons.
- Report is named by date and time; e.g. 2011.12.12 11:12:15

***Caution:*** *It is possible to use <Search report> option.*

**List of density reports data:**

| | | |
|---|---|---|
| 1. | Sample number | [field with a value, if in Density mode <YES> value is set for <Request sample number> parameter] |
| 2. | Start date | |
| 3. | End date | |
| 4. | Density | [calculated density of a sample, liquid or air] |
| 5. | Volume | [calculated volume of tested sample, *density measurement of solid body*] |
| 6. | Procedure | [depending on selected procedure, data contained on a report may change] |
| 7. | Operator | [name of an operator carrying out the procedure] |
| 8. | Product | [name of tested sample] |
| 9. | Standard liquid | [name of a liquid used for determining density *of solid object]* |
| 10. | Standard liquid density | [*density determination of solid object*] |

| | | |
|---|---|---|
| 11. | Temperature | [temperature of liquid used for carrying out a measurement, *density determination of solid body*] |
| 12. | Sinker volume | [*density determination of a liquid*] |
| 13. | Mass of steel standard | [*density determination of air*] |
| 14. | Mass of aluminium standard | [*density determination of air*] |
| 15. | Mass of steel standard | [*density determination of air*] |
| 16. | Mass of aluminium standard | [*density determination of air*] |
| 17. | Weighing 1 | [mass measurement of tested sample or a sinker in the air, or mass of measured steel standard] |
| 18. | Weighing 2 | [mass measurement of tested sample or a sinker in liquid, or mass of measured aluminium standard] |

### 29.5. Control Reports

Each product control carried out using the SQC or PGC mode is sent to a printer or saved to <**Controls reports**> database. Each control saved to the database features specific number assigned at the moment of control completion.

**Control number format:**
**X / y y / M M / d d / H H / m m**, where:

X – control type, marked as follows:
U – control regulated by the act,
Z – control completed by an operator,
W – control regulated by an internal criteria for PGC or SQC mode
yy - year of control end,
MM - month of control end,
dd - day of control end,
HH - hour of control end,
mm - minute of control end,
You can preview data on each control.

**Procedure:**

- Enter **<Reports>** submenu, follow the procedure described in section 29 of this user manual.
- Enter **<Controls reports>** database and press respective record.

**List of parameters defined for control:**

| | | |
|---|---|---|
| 1. | Batch number | [batch number of controlled product] |
| 2. | Result | [control status (result)] |
| 3. | Start date | [control start date] |
| 4. | End date | [control end date] |
| 5. | Product | [name of controlled product] |
| 6. | Operator | [name of an operator carrying out control] |
| 7. | Average | [average value from carried out measurements] |
| 8. | Average limit | [average disqualifying value] |
| 9. | Standard deviation | [average standard deviation] |

10. Batch quantity [quantity of a batch; value for which the software accepts the size of tested sample in accordance with the regulation]

11. Measurements quantity [quantity of carried out measurements]
12. Method [control method (regulated by the act or by internal criteria)]

For SQC mode controls, the data comprise the following values.
Each report on completed product control is sent to a printer and saved to the **<Controls reports>** database. Each control saved to the database features a specific number assigned at the moment of control completion.

**Control number format:**
**y y / M M / d d / H H / m m / s s**, where:
yy - year of control end,
MM - month of control end,
dd - day of control end,
HH - hour of control end,
mm - minute of control end,
ss - second of control end.

You can preview data on each control.

**Procedure:**

- Enter **<Reports>** submenu, follow the procedure described in section 29 of this user manual.
- Enter **<Controls reports>** database and press respective record.

**List of parameters defined for control:**

1. Batch number [batch number of controlled product]
2. Result [control status (result)]
3. Start date [control start date]
4. End date [control end date]
5. Product [name of controlled product]
6. Operator [name of an operator carrying out control]
7. Average [average value from carried out measurements]
8. Average limit [average disqualifying value]
9. Standard deviation [average standard deviation]
10. Batch quantity [quantity of a batch; value for which the software accepts the size of tested sample in accordance with the regulation]
11. Measurements quantity [quantity of carried out measurements]
12. Method [control method (regulated by the act, by internal criteria or by SQC)]
13. Measurements graph

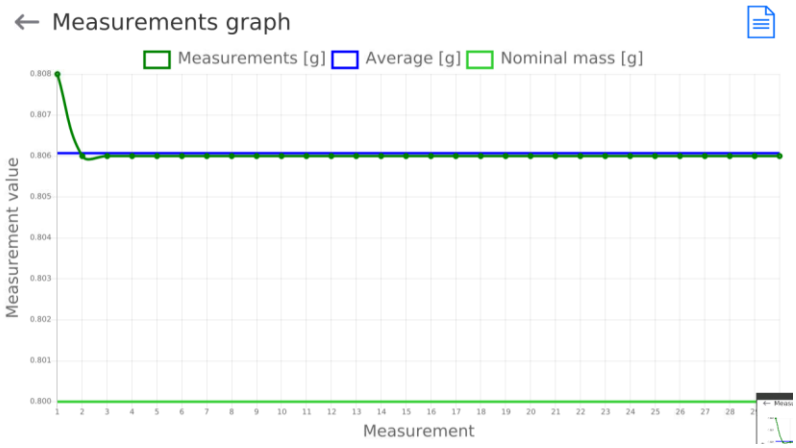


14. Measurements graph with thresholds:

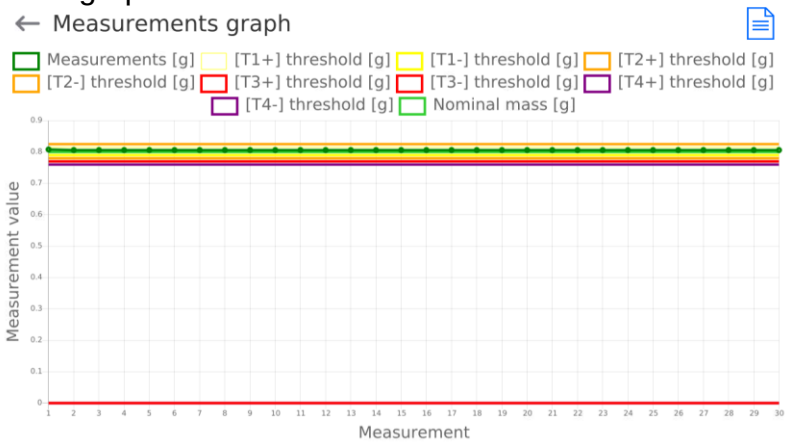


15. Probability distribution graph

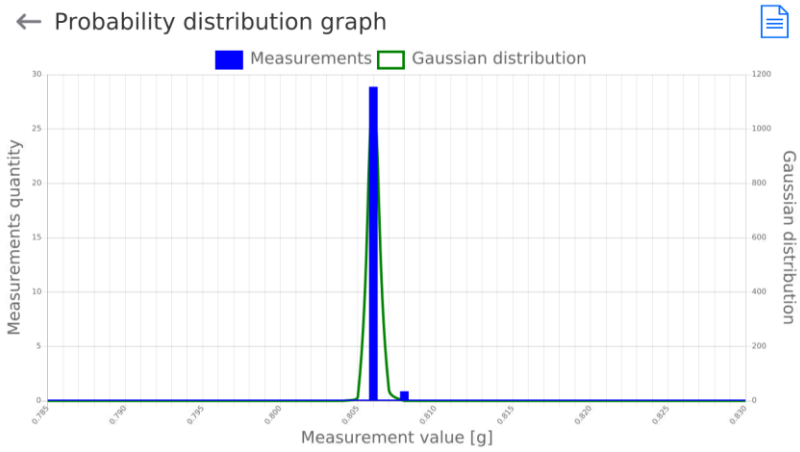


### 29.6. SQC Statistics

SQC Statistics database enables you to list and compare all measurements performed for a particular product. For each product it is possible to preview reports on particular controls, generate a graph presenting the course of measurements obtained for all tests of the given product, printout and export data.

**Procedure:**

- Enter <**Reports**> submenu and press <SQC Statistics> entry.
- Select product for which tests history is to be generated.
- Specify data that is to be searched (lot number, start date and end date).
- Display list of reports on controls that meet the specified criteria (product, performance date): <Control reports>.
- Generate measurement graph.

**To generate measurement graph:**

- Enter <Reports> submenu.
- Press <SQC Statistics> entry.
- Select product for which tests history is to be generated.
- Specify data that is to be searched (lot number, start date and end date).
- Select <All-in-one report> option.
- Select <Measurements graph> option.

The program generates and displays (in a coordinate system) a graph presenting the results of product drying processes: Result/Measurement number.
Graph example:

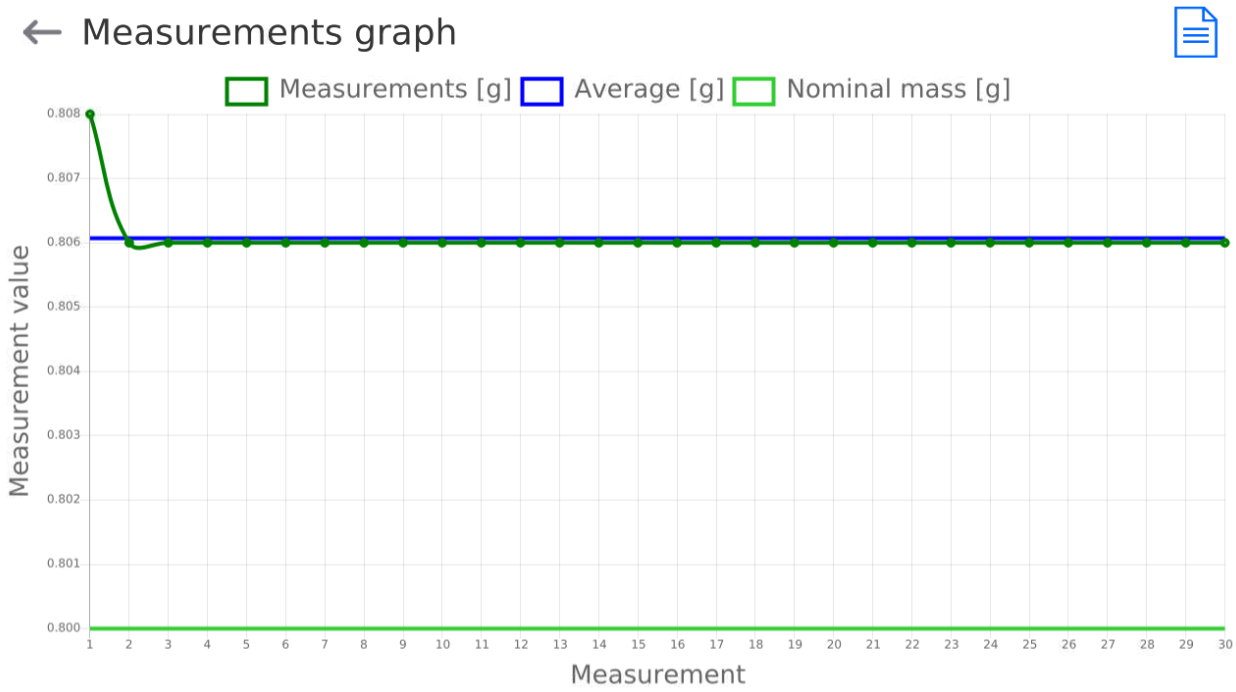


### 29.7. Average Tares

*(function disabled for standard balance models).*

Prior to the **<Non-destructive average tare>** control, you can determine the average tare by weighing packages. Each process is automatically saved to the **<Average tares>** database. Each control saved to the database features a specific number assigned at the moment of control completion.

**Control number format:**
**X / y y / M M / d d / H H / m m / T**, where:

X – control type, marked as follows:
U – control regulated by the act,
Z – control completed by an operator,
W – control regulated by internal criteria,
yy - year of control end,
MM - month of control end,
dd - day of control end,
HH - hour of control end,
mm - minute of control end,
T - control from average tare value determination.

You can preview data on each process of average tare determination.

**Procedure:**

- Enter **<Reports>** submenu, follow the procedure described in section 29 of this user manual.
- Enter <**Average tares**> database and select a desired entry.

**List of parameters defined for average tare:**

1. Product [name of a product, packaging of which is subjected to average tare value determination]
2. Status [process status (result)]
3. Date [process performance date]
4. Tare [determined packaging tare value]
5. S [average standard deviation]
6. 0.25 T1 [the value of a criterion for process result]
7. Measurements quantity [quantity of carried out tare value measurements]
8. Operator [name of an operator carrying out the process]
9. Method [control method (regulated by the act or by internal criteria)]

### 29.8. Pipette Calibration Reports

Pipette reports provide information about carried out pipettes calibrations. In the case of multichannel pipettes, reports are generated for each channel separately. Each report can be previewed, searched by date or exported, and printed out.

**Procedure:**

- Enter <Reports> submenu and press <Pipette calibration reports> entry.
- Select report, if not visible, scroll using navigation buttons.
- Report is named by date and time; e.g. 2012.03.12 11:12:15.

***Caution:*** *It is possible to use <Search report> option.*

**List of pipette calibration reports data:**

1. Pipette [pipette name]
2. Serial no. [serial no. entered during calibration]
3. Channel no.
4. Start date
5. End date

| | | |
|---|---|---|
| 6. | Operator | [name of an operator carrying out calibration] |
| 7. | Customer | [customer name] |
| 8. | Measurements quantity | [quantity of measurements for each tested volume] |
| 9. | Operation with adherence to ISO 8655 | [information if errors comply with the standard] |
| 10. | Status | [information whether errors are below permissible values accepted for the tested volume] |
| 11. | Temperature | [average temperature value during the process] |
| 12. | Humidity | [average humidity value during the process] |
| 13. | Pressure | [average pressure value during the process] |
| 14. | Water temperature | [average water temperature during the process] |
| 15. | Z coefficient | [coefficient value for given temperature] |

### 29.9. Mass Controls

*(function disabled for standard balance models).*

Each report on completed product control is sent to a printer and saved to the **<Mass controls>** database. Each control saved to the database features a specific number assigned at the moment of control completion.

**Mass control number format:**
**y y / M M / d d / H H / m m**, where:
yy - year of control end,
MM - month of control end,
dd - day of control end,
HH - hour of control end,
mm - minute of control end,
You can preview data on each control.

**Procedure:**

- Enter **<Reports>** submenu, follow the procedure described in section 29 of this user manual.
- Enter **<Mass controls>** database and press respective record.

**List of parameters defined for control:**
<u>The reports contain the following information:</u>

| | |
|---|---|
| Batch number | Number of controlled batch |
| Start date | Control process start date |
| End date | Control process end date |
| Operator | Operator carrying out control process |
| Product | Controlled product |
| Average | Mean mass value determined during control |
| Average [%] | Mean mass value determined during control [%] |
| Standard deviation | Standard deviation of carried out control |
| Standard deviation [%] | Standard deviation of carried out control [%] |

| | |
|---|---|
| Min | Min threshold, mass below this threshold is not included into control. |
| Max | Max threshold, mass above this threshold is not included into control. |
| T4- errors quantity | Quantity of errors in the course of control |
| T3- errors quantity | |
| T2- errors quantity | |
| T1- errors quantity | |
| T1+ errors quantity | |
| T2+ errors quantity | |
| T3+ errors quantity | |
| T4+ errors quantity | |
| Batch quantity | Controlled batch quantity determined in a report |
| Measurements graph | Graph presenting particular measurements in coordinates system. |
| Probability distribution graph | |

Each report can be printed. To do that, select a report and display its details. The **<Print>** pictogram is displayed in the top bar. Press it to print the report.
The database can be exported to a file. To do that, press **<Export to a file>** button.

### 29.10. Ambient Conditions

<Ambient conditions> database contains parameters related to ambient conditions. Depending on the balance type, the ambient conditions report can provide values of temperature, humidity, atmospheric pressure. If the given balance is connected to a THB sensor, then its indications are recorded to the database too.

**Procedure:**

- Enter <Reports> submenu and press <Ambient conditions> entry.
- Select report, if not visible, scroll using navigation buttons.
- Report is named by date and time.

***Caution:*** *It is possible to use 'search report' option.*

### 29.11. Reports Management

Function allowing to manage databases data. It comprises three options: Export weighing database, Delete databases and Delete weighings and reports.

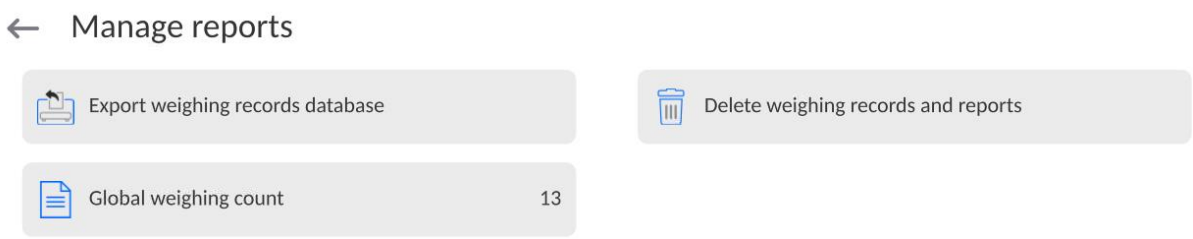

### 29.11.1. Export Weighing Database to a File

All measurements are saved to the <Weighing records> database and can be exported to a file using a USB flash drive.

**Procedure:**

- Connect the USB flash drive to the USB port.
- Press <Export weighing records database to a file> entry; a window for setting export options is opened.

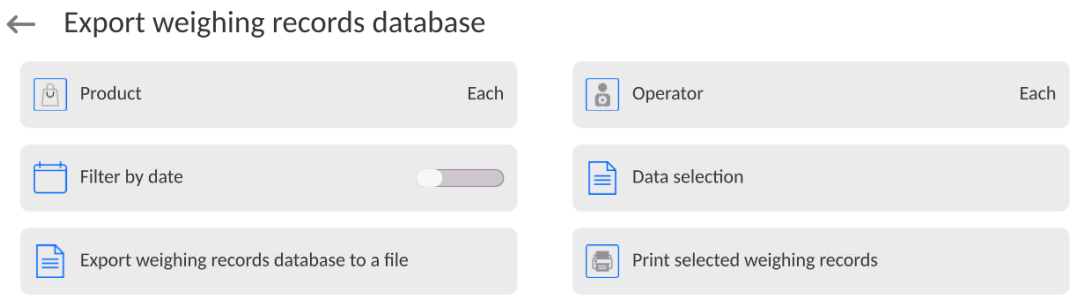


<Data selection> parameter allows you to specify which measurement-related data are to be exported.

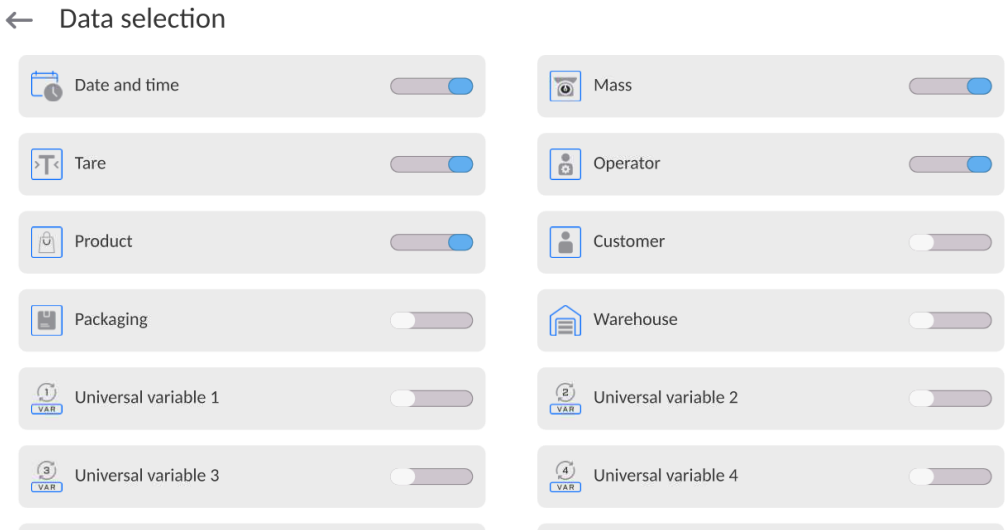


- Set respective data and press <Export weighing records database to a file> entry; weighing database is automatically exported.
- Upon export completion, the message <**Completed>** is displayed along with information on the number of exported data and with the file name (*.txt extension). Next, previous window is displayed.

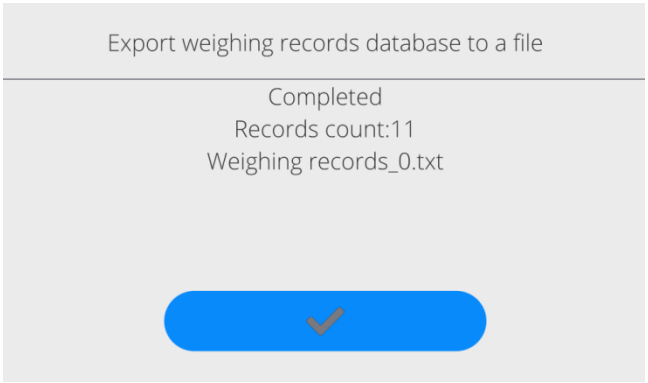

- You may return to the weighing procedure or proceed to other settings.

***Caution:*** *If balance software cannot identify the USB flash drive, then upon pressing <Export weighings database to a file> entry, <Operation failed> message is displayed.*

- A name of created file consists of database name and balance serial number, e.g. <Weighing data_364080.txt>.
- Unplug the USB flash drive from the USB port.

**Template of a created file:**
The file is created in the form of a table, columns of which are separated by <Tab>. This allows for direct export of the file to <Excel> spreadsheet document. The table contains the following data: date and time, mass and mass unit, tare and tare unit, serial number, operator name, customer name, packaging name, source warehouse name, target warehouse name, control result name.

### 29.11.2. Delete Weighings and Reports

Function allowing to delete weighings and reports of a given database.

**Procedure:**
Activate <Delete weighing records and reports> parameter; a window with a numeric keyboard is displayed.
Enter a date specifying which data is to be removed. Date is given in the following form: year-month-day.

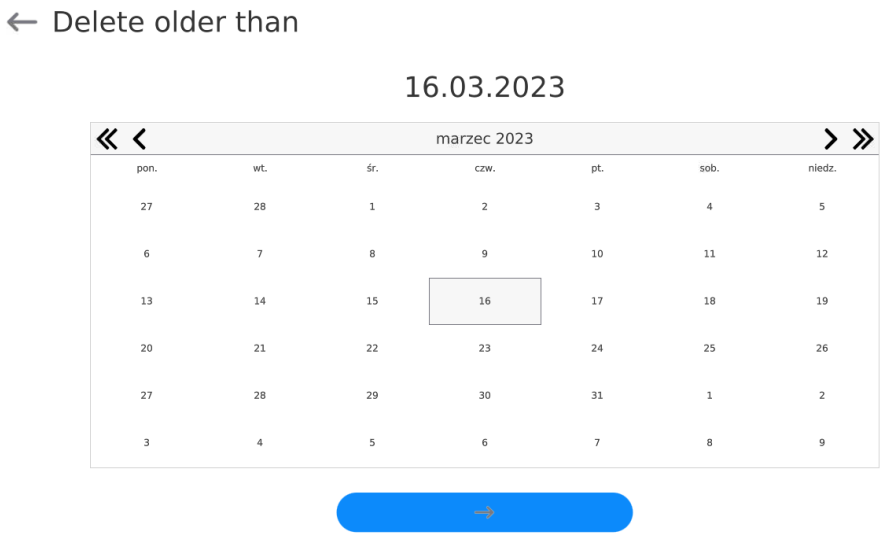


Confirm the date, all weighings and reports older than those specified by the date are removed. Quantity of deleted weighings and reports is displayed.

# 30. COMMUNICATION

Communication menu is located in the Parameters menu. To access Parameters menu, press Setup key or <Setup> quick access button. Communication between the balance and the peripheral devices is established via the following ports:

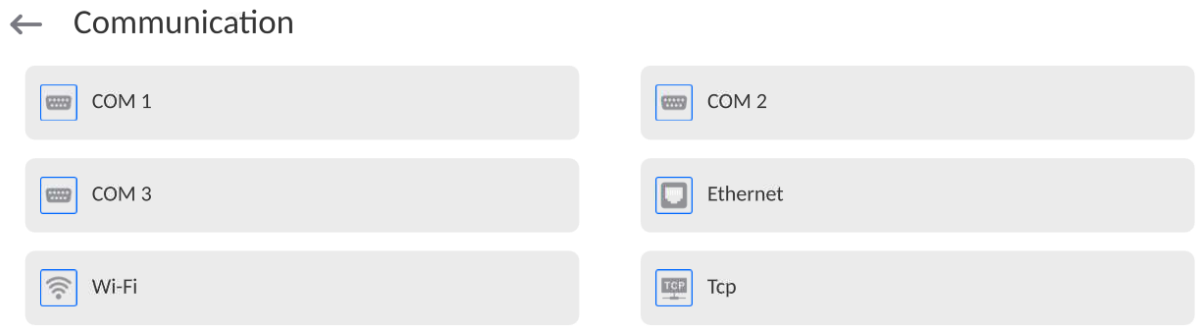


The parameters of each port can be configured depending on the needs.

It is possible to expand the range of interfaces with the use of the IM02 communication module that is connected to the scale via COM3 interface. In its standard design, the IM02 communication module is supplied with the following interfaces: RS 232 IM02, Virtual COM, 4WE/4WY.

## 30.1. RS232 Ports Settings

***Caution:*** *To ensure correct interaction with external devices via RS 232 ports, use a USB to RS232 converter.*

| | |
|---|---|
| 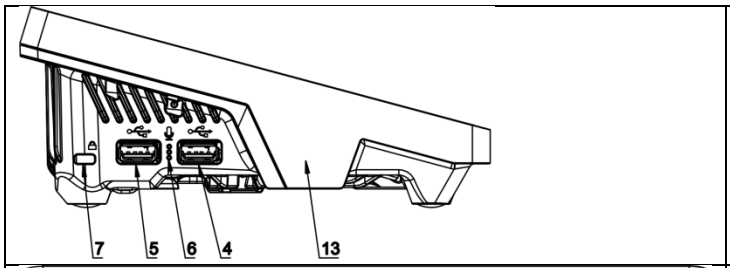  | 4 – USB type A port, which after connecting the converter is seen by the software as RS 232 - COM1<br><br>5 – USB type A port, which after connecting the converter is seen by the software as RS 232 - COM2 |
| 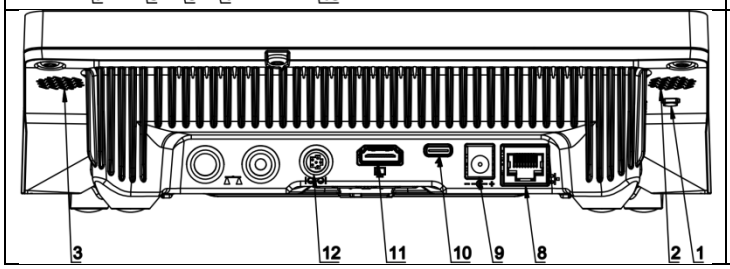  | 12 - COM 3 port – RS 232 port. |

**Procedure:**

- Select communication port: <COM1>, <COM2> or <COM3>.
- Set respective parameters.

Transmission parameters for RS 232 ports:

- Baud rate: 4800, 9600, 19200, 38400, 57600, 115200 bit/s, *921600 bit/s**
- Data bits: 5, 6, 7, 8
- Stop bits: None, 1, 1.5, 2
- Parity: None, Odd, Even, Marker, Space

***) –** Speed value available only to the COM3 port for cooperation with IM02 communication module.

### 30.2. ETHERNET Port Settings

**Procedure:**

– Select <Ethernet> port. Set respective parameters:

- DHCP: Yes – No
- IP Address: 192.168.0.2
- Subnet mask: 255.255.255.0
- Default gate: 192.168.0.1

***Caution:*** *The above presented values serve informative purposes only. Set the transmission parameters in accordance with your local network.*

Press button, the message *<Restart balance to implement changes> is displayed.* Return to the weighing procedure and restart the balance.

### 30.3. Wi-Fi Settings

A balance equipped with Wi-Fi displays a respective pictogram:

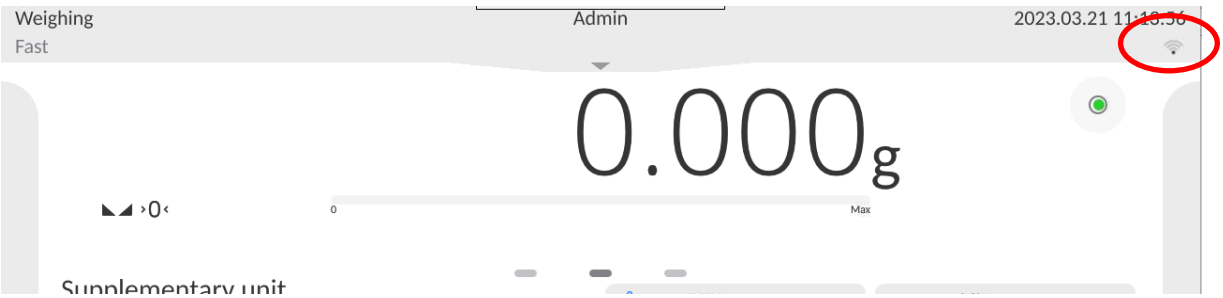


**Procedure:**

– Select <Wi-Fi> communication interface. Set respective parameters:

- DHCP: Yes – No
- IP Address: 10.10.9.155
- Subnet mask: 255.255.255.0
- Default gate: 10.10.8.244

***Caution:*** *The above presented values serve informative purposes only. Set the transmission parameters in accordance with your local network.*

Press button, the message *<Restart balance to implement changes> is displayed.* Return to the weighing procedure and restart the balance.

You may use <Available networks> parameter to view the list of networks detected by the balance:

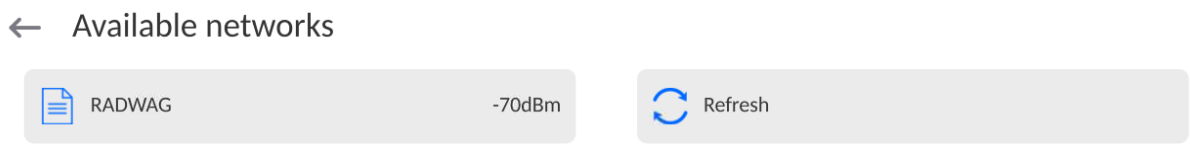


A pictogram with a padlock means that the password is required. Press <Refresh> to search for available networks.
Press <Network status> to check selected network parameters.

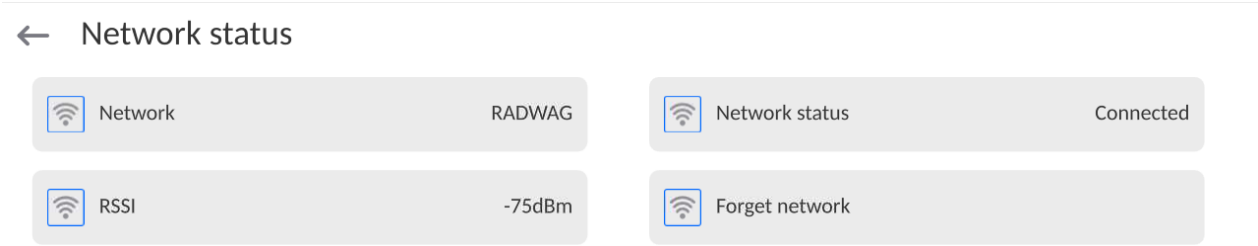


The selected network and connection parameters are saved to the balance memory. The program connects to the network in accordance with the memory-saved parameters each time the balance is switched on. To change this, select <Forget network> option. The previously selected network gets disconnected.

### 30.3.1. Hot Spot - General Information

Hot Spot - an open access point allowing wireless connection with the balance by another device - laptop, tablet or phone, using a wireless network based on Wi-Fi standard.

The owner of the Hot Spot decides for himself how, to whom and under what conditions he is going to make his link available by logging in, which requires having an individual user name and password (these data are given while starting the service and are stored in the memory of the balance).

### 30.3.2. Hot Spot Activation

1. Enter Wi-Fi option

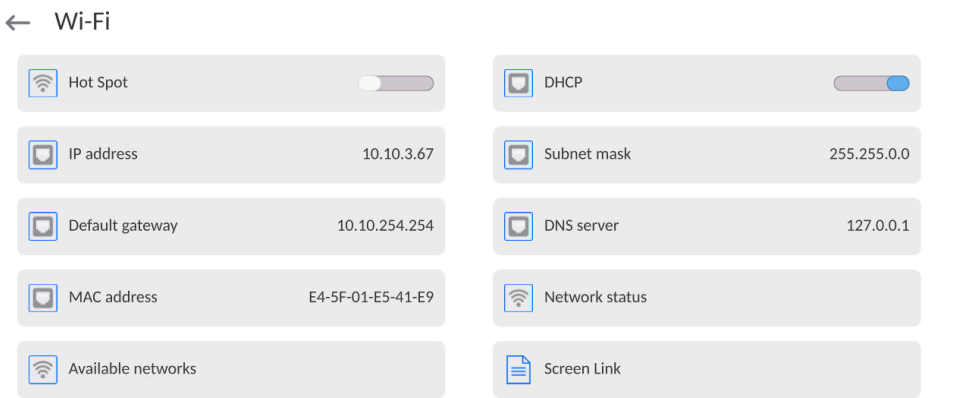


2. Activate Hot Spot, the balance will switch to the service settings after a moment.

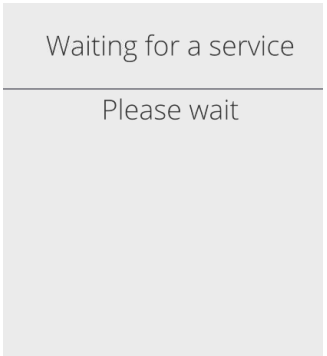

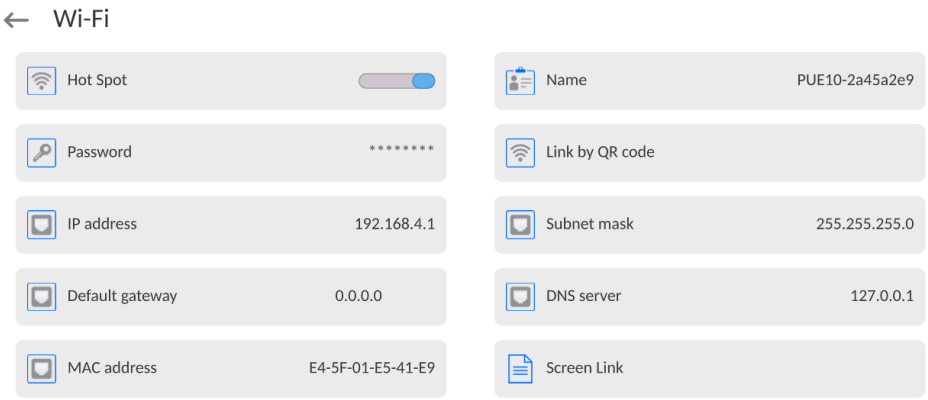


3. Enter an individual name and password for access (password must be at least 8 characters long).

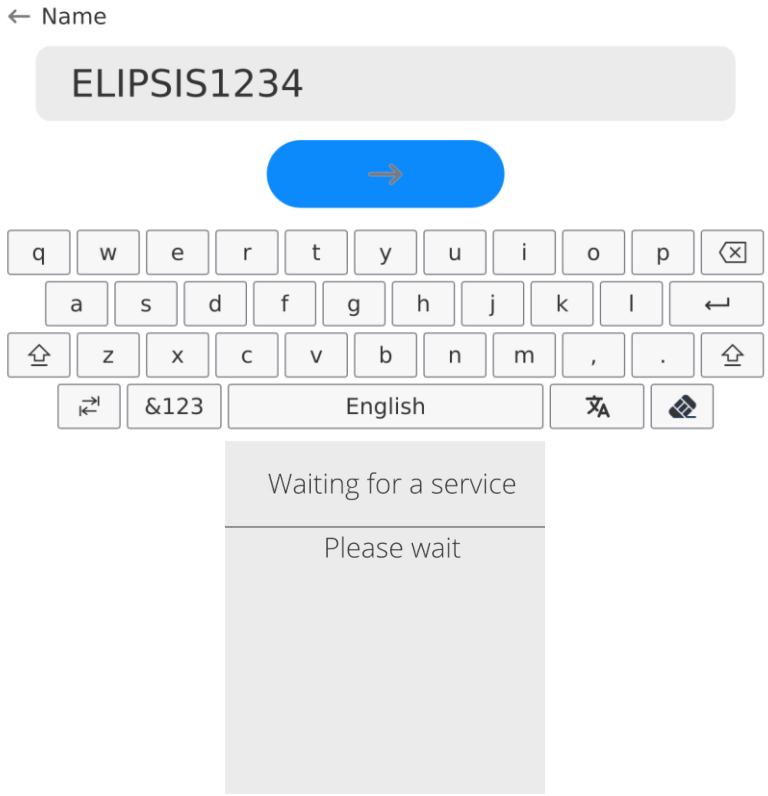


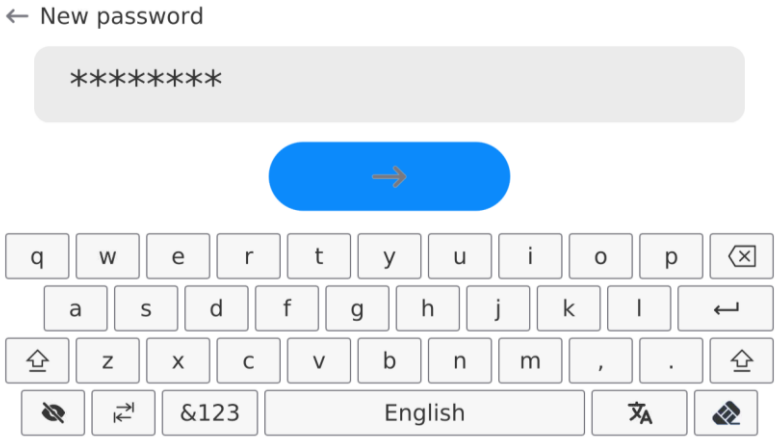

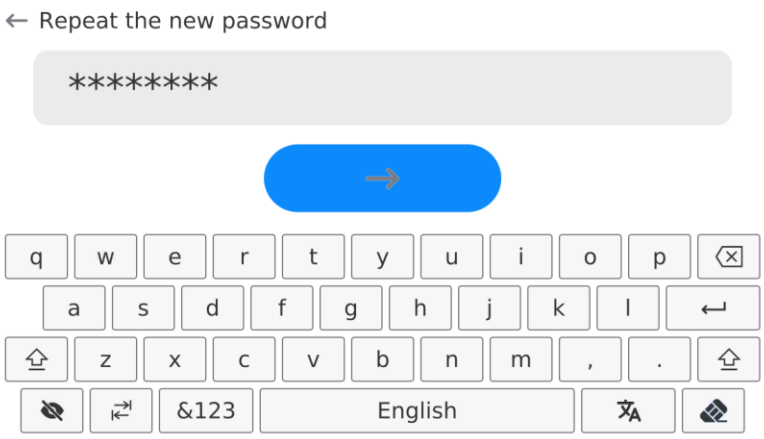


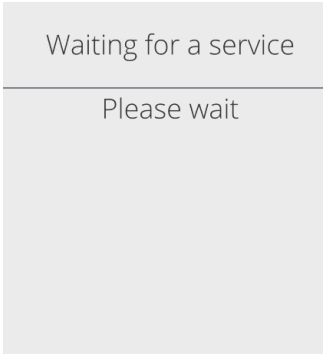


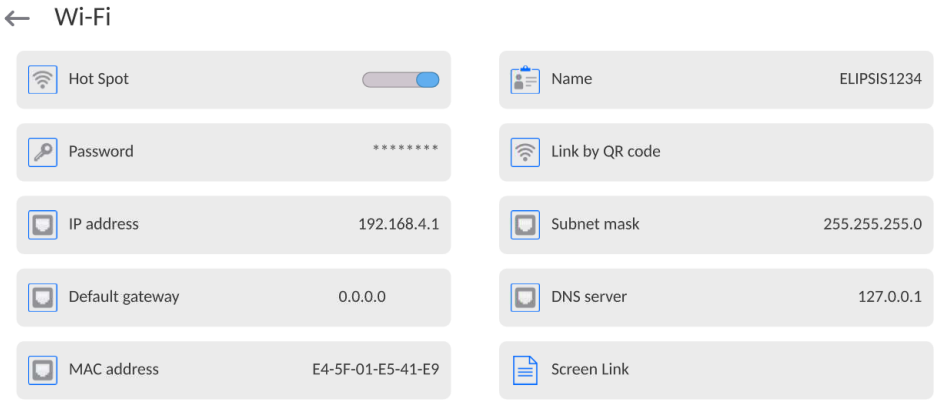


4. From now on, the Hot Spot service will be active and the created subnetwork will be visible by other smartphone devices under the name assigned above and you will be able to connect to it using the assigned password.

### 30.4. TCP Settings

TCP (*Transmission Control Protocol*) is a stream protocol, operating in customer-server mode, enabling communication between two computers. TCP operates in client – server mode. You can establish a connection on the specified server port.

**Procedure:**

- Enter <Communication> parameters.
- Select <TCP / Port>; a <Port> window with an on-screen keyboard is opened.
- Insert required port number and press button to confirm.

### 30.5. Virtual COM Settings

*Applicable in the case of an active IM02 communication module*

Virtual COM is intended for connecting the scale to a computer.

**Steps:**

1. Enter **<Peripherals / Computer / Port>** submenu and set **Virtual COM** option.
2. Run a PC software to read measurements made with the scale.
3. Set communication parameters in the PC software, i.e.: COM port, transmission parameters.
4. Start connection.

## 31. PERIPHERALS

<Peripherals> menu is located in the <Parameters> menu. To access Peripherals menu, press Setup key or <Setup> quick access button. Peripherals menu provides a list of devices that can cooperate with the balance.

### 31.1. Computer

Active balance – computer connection is signalled by pictogram (top bar of the home screen). Carry out configuration using <Computer> submenu.

**Procedure:**

- Press Setup and select <Peripherals/ Computer>.
- Set balance-computer operation parameters:
  - <u>Computer port</u>
    Available options: none, COM 1, COM 2, COM3, TCP, USB Free Link, RS 232 IM02**, Virtual COM**.

***) -** for port description, read section COMMUNICATION of the manual.
****) -** Communication ports of the scale-connected IM02 communication module.

**USB FREE LINK** - USB type C port (socket no. 10 on the back of the indicator), to which the computer is connected using a USB type A/type C cable.

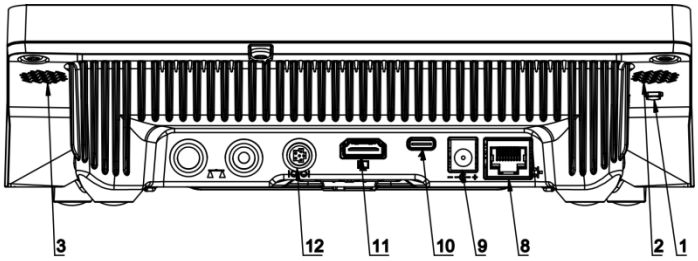


Tool for entering data, it functions as a keyboard. Upon proper modification of the standard or non-standard printout and sending a proper command from the computer, or upon pressing ENTER key located on the operation panel, the data from the non-standard printout are entered directly to computer programs, e.g. Excel, Word, Notepad etc.

To ensure proper operation with Excel-type program, the non-standard printout must be properly configured by inserting the print formatting characters, such as Tab, Enter and language-specific diacritics, into the designed printout. Also remember to set the correct decimal separator (full stop or comma) that the Excel-type program will accept. It can be set in: *Setup/Misc./Decimal point*.

Below is an example of a printout template and the resulting printout in Excel:

1 – fixed text
2 – tab key (skip to the next column)
3 – variable {6}, net weight in an adjustment unit
4 – tab key (skip to the next column)
5 – variable {10}, mass unit

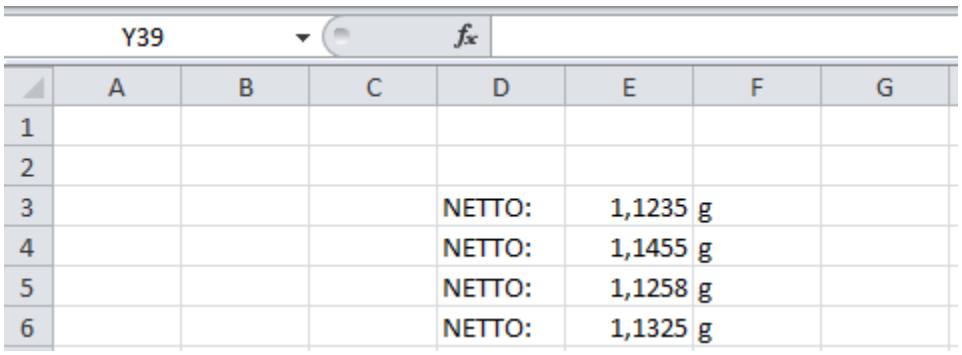

| | A | B | C | D | E | F | G |
|---|---|---|---|---|---|---|---|
| 1 | | | | | | | |
| 2 | | | | | | | |
| 3 | | | | NETTO: | 1,1235 | g | |
| 4 | | | | NETTO: | 1,1455 | g | |
| 5 | | | | NETTO: | 1,1258 | g | |
| 6 | | | | NETTO: | 1,1325 | g | |

### 31.1.1. Computer address

Setting a balance address which computer is connected to.

**Procedure:**

- Enter **<Devices / Computer / Address>** submenu and you will see **<Address>** box with on-screen keyboard.
- Enter address and press → to confirm changes.

### 31.1.2. Permanent transmission

Activation of balance-computer permanent transmission. After enabling <**Permanent transmission>** parameter, the content of **<Weighing Printout Template>** is continuously sent to the PC.

**Procedure:**

- Enter **<Devices / Computer / Permanent transmission>** submenu and set relevant value ( - Permanent transmission disabled; - Permanent transmission enabled).

### 31.1.3. Interval

Setting frequency of **<Weighing Printout Template>** printout for permanent transmission. Printing frequency can be set in seconds, with an accuracy of 0.1sec. and the range from 0.1 to 1000 seconds.

**Procedure:**

- Enter **<Devices / Computer / Interval>** submenu and you will see **<Interval>** edition window.
- Enter desired value and confirm by pressing .

### 31.1.4. Weighing printout template

A unique template for printing from balance to PC.

**Procedure:**

- Enter **<Devices / Computer** / **Weighing Printout Template>** submenu. You will see **<Weighing Printout Template>** window with an on-screen keyboard.
- Modify the template and confirm changes by pressing .

### 31.1.5. Cooperation with E2R System

Activation of cooperation between the balance and **E2R System. E2R System** software is a modular system that comprehensively supports production processes related to weighing at various stages.

| | |
|---|---|
| ⚠ | ***Only <Administrator> is allowed to activate <E2R> parameter. In case of cooperating with the <E2R System> software, database edition in the balance is blocked.*** |

Access path: **< / Devices / Computer / E2R System>**.

**List of options in <E2R System> submenu:**

| | |
|---|---|
| **Active system** | Activation of connection to **E2R System**: - connection disabled, - connection enabled. If the connection is enabled, the icon in the top bar of the home screen will be visible. |
| **Block product selection** | Activation of product selection lock for balance operator: - lock disabled, - lock enabled. |
| **Databases** | Submenu with configuration of databases that cooperate with E2R System. |
| **Info** | List of database events that occur during active connection to E2R System. |

### 31.2. Printer

<Printer> submenu allows you to:

- set port for establishing communication with a printer: COM 1, COM 2, COM3, USB, Tcp Client, USB Free Link*, RS 232 IM02**,
- define printer's code page (default: 1250),
- define control codes for PCL printer or receipt printer.
  ***Caution:*** *Codes must be entered in a hexadecimal form!*
- define printout templates.

***) -** for port description, read section COMMUNICATION of the manual.
****) -** Communication ports of the scale-connected IM02 communication module.

To ensure correct balance – printer operation (correct printout of diacritical signs of a given language), respective baud rate, obligatory for a given printer, must be chosen (see the printer settings). Additionally, the code page of a sent printout must be accordant with the code page of a printer.
There are two methods for obtaining code page accordance:

- by setting the right code page in printer settings (read the printer manual) – respective to the printout code page set in the balance;

| Code page | Language |
|---|---|
| **1250** | Polish, Czech, Hungarian. |
| **1252** | English, German, Spanish, French, Italian. |
| **1254** | Turkish. |

- by sending a control code from the balance to the printer, which automatically sets the right code page (respective to the code page set in the balance) before the data printout – it is possible only for printers equipped with this option.

| | |
|---|---|
| ⚠ | ***Default value of printer code page is 1250 – central European code page.*** |
| ⚠ | ***Detailed description of communication between the balance and the labeller is to be found in 'ANNEX 03'.*** |

**USB FREE LINK** - USB type C port (socket no. 10 on the back of the indicator), to which the computer is connected using a USB type A/type C cable.

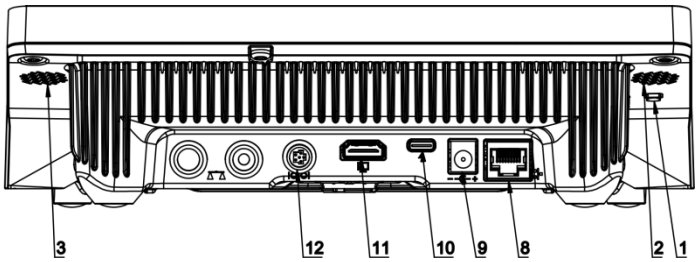


Tool for entering data, it functions as a keyboard. Upon proper modification of the standard or non-standard printout and sending a proper command from the computer, or upon

pressing ENTER key located on the operation panel, the data from the non-standard printout are entered directly to computer programs, e.g. Excel, Word, Notepad etc.
To ensure proper operation with Excel-type program, the non-standard printout must be properly configured by inserting the print formatting characters, such as Tab, Enter and language-specific diacritics, into the designed printout. Also remember to set the correct decimal separator (full stop or comma) that the Excel-type program will accept. It can be set in: *Setup/Misc./Decimal point*.
Below is an example of a printout template and the resulting printout in Excel:

1 – fixed text
2 – tab key (skip to the next column)
3 – variable {6}, net weight in an adjustment unit
4 – tab key (skip to the next column)
5 – variable {10}, mass unit

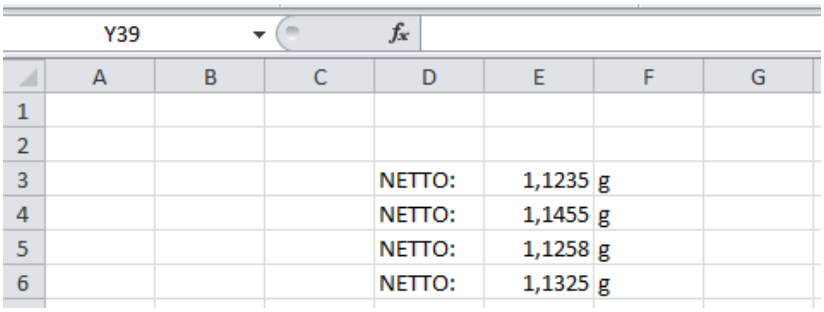

| | A | B | C | D | E | F | G |
|---|---|---|---|---|---|---|---|
| 1 | | | | | | | |
| 2 | | | | | | | |
| 3 | | | | NETTO: | 1,1235 | g | |
| 4 | | | | NETTO: | 1,1455 | g | |
| 5 | | | | NETTO: | 1,1258 | g | |
| 6 | | | | NETTO: | 1,1325 | g | |

If data with a high information content, such as the SQC report, is to be printed using Free Link, it is imperative that the parameter <Receipt printer speed [character/second]> is set to 15.

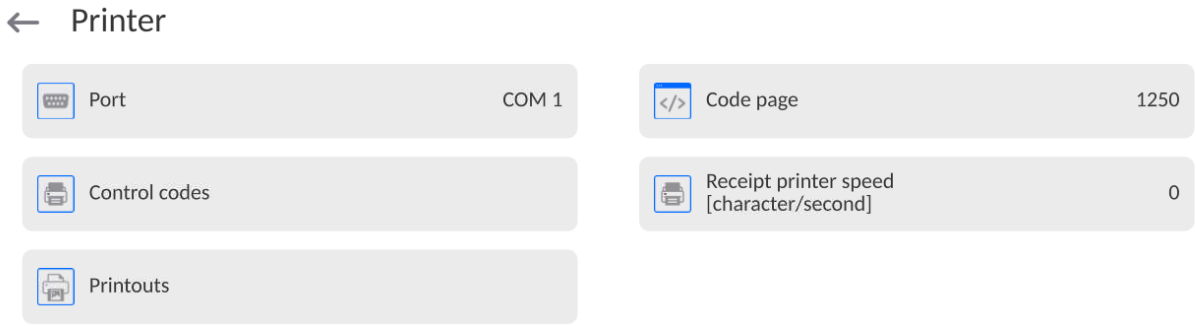


A printout template describes how to print information from databases.
The template can be modified. In order to check the format of a printout template, print the data related to e.g. product parameters. To do it, go to <Products/Edit product> submenu and press printer pictogram.

Default values for particular templates:

| | |
|---|---|
| Product printout template | {50} |
| | {51} |
| Operator printout template | {75} |
| | {76} |
| Customer printout template | {85} |
| | {86} |
| Warehouse printout template | {130} |
| | {131} |
| Package printout template | {80} |
| | {81} |
| | {82} |

Ambient conditions printout template

```
----------- AMBIENT CONDITIONS--------------
{275}
IS T1:   {278} °C
IS T2:   {279} °C
THB T:  {276} °C
THB H: {277} %
---------------------------------
```

Formulation printout template

```
----------- Formulation --------------
Formulation name:        {165}
   Ingredients quantity:  {167}
   Target mass:           {168} g
   Formulation ingredients: {169}
---------------------------------
```

### 31.3. Barcode Scanner

The balance enables operation with a barcode scanner. The barcode scanner is used to facilitate quick search for database records:

- Products,
- Operators,
- Customers,
- Packages,
- Warehouses,
- Formulations,
- Pipettes,
- Series in a differential weighing,
- Universal variables.

| | |
|---|---|
| ⚠ | ***In <Communication> submenu it is necessary to set baud rate value to a value accordant with bar code scanner (by default 9600b/s). Detailed description of communication between the balance and the bar code scanner is to be found in 'ANNEX 03'.*** |

To configure the barcode scanner, enter:
**„Setup / Peripherals/ Barcode scanner"**.

***Caution:*** *Enter* ***<Communication>*** *submenu and set baud rate for the barcode scanner (by default 9600b/s). For detailed description of the balance - barcode scanner communication, read* ***ANNEX E*** *of this user manual.*

### 31.3.1. Barcode Scanner Port

**Procedure:**

- Enter **<Peripherals>** parameter and go to **„Barcode scanner** / **Port"** parameter. Select respective option.

Ports for balance - scanner communication:

- RS 232 (COM1),
- RS 232 (COM2),
- USB

### 31.3.2. Prefix/Suffix

You can edit **<Prefix>** and **<Suffix>** to synchronize the balance program with the barcode scanner.

***Caution:*** *In RADWAG-adopted standard, the prefix is 01 sign (byte) hexadecimal format, the suffix is 0D sign (byte) hexadecimal format. For detailed description of the balance - barcode scanner communication, read* ***ANNEX E*** *of this user manual.*

**Procedure:**

- Enter **<Barcode scanner>** submenu,
- Select **<Prefix>** parameter and enter hexadecimal value using the on-screen keyboard. Press button to confirm.
- Select **<Suffix>** parameter and enter hexadecimal value using the on-screen keyboard. Press button to confirm.

### 31.3.3. Field Selection

Parameter for specifying for which field the search is to be carried out in particular databases.

**Procedure:**

- Enter **<Peripherals>** submenu,
- **Select „Barcode scanner** / **Field selection"**. List of fields is displayed:

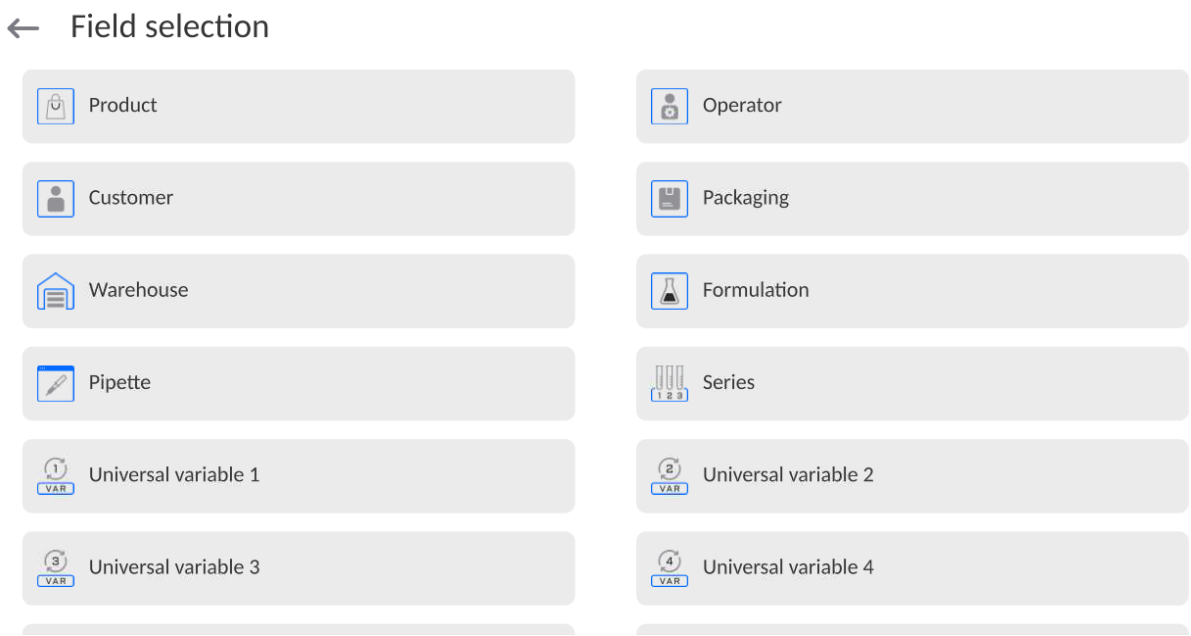


- Select one item from the list. The following parameters may be edited:

| | |
|---|---|
| **Filtering** | Parameter allowing you to declare search criteria (see table below) |
| **Offset** | Parameter allowing you to set the first significant code's character; characters preceding the first significant character are skipped during comparison search. |
| **Code length** | Parameter allowing you to set the number of code's characters to be taken into account during search procedure. |
| **Start marker** | Parameter allowing you to declare the starting point of scanned code, taken into account during the search. |
| **End marker** | Parameter allowing you to declare the ending point of scanned code, taken into account during the search. |
| **Ignore marker** | Parameter allowing you to determine whether start and end markers are to be referred to or skipped during comparison of a scanned code with the code saved to the balance. |

**Filtering criteria conditioned by field type:**

| Field selection | Filtering |
|---|---|
| Product | None, Name, Code, EAN code |
| Operator | None, Name, Code, |
| Customer | None, Name, Code, |
| Packaging | None, Name, Code, |
| Warehouse | None, Name, Code, |
| Formulation | None, Name, Code, |
| Pipette | None, Name, Code, |
| Series | None, Name, Code, |
| Universal variables | None, Active |

### 31.3.4. Test

**<Test>** parameter allowing you to verify if operation of a barcode scanner connected to a balance is correct.

**Procedure:**

- Enter **<Barcode scanner>** submenu,
- Select **<Test>** parameter; **<Test>** edit box is displayed, it features ASCII and HEX fields.
- The code is scanned and entered to the ASCII and HEX fields; next, the test result is displayed in the bottom part.

**When:**

- **<Prefix>** and **<Suffix>** declared in the balance settings comply with <Prefix> and <Suffix> of the scanned code, the test result is **<Positive>**,
- **<Prefix>** and **<Suffix>** declared in the balance settings do not comply with <Prefix> and <Suffix> of the scanned code, the test result is **<Negative>**.

## 31.4. Ambient Conditions Module

Ambient conditions module (THB) can be connected to the balance via COM 1, COM 2, UDP or USB ports. In order to provide correct cooperation, enter the module address and baud rate for the port (port settings) to which the ambient conditions module is connected (the address and baud rate are to be found on the module's data plate).

## 31.5. Automatic Feeder

*(function disabled for standard balance models).*

A dedicated port for cooperation between the scale and the tablet dispenser is the RS 232 port (COM3).

To ensure correct cooperation with the feeder, set its address (the address and baud rate are to be found on the automatic feeder's data plate).

## 31.6. IM02 communication module

The IM02 communication module allows the scale to cooperate with such accessories as printers, control keys, stack lights, buzzers, PLC controllers, as well as other control-signalling devices and PCs.

| | |
|---|---|
| ⚠ | ***The procedure of connecting the IM02 communication module to the supply network and scale has been described in detail in the 'IM02 communication module' manual.*** |

### 31.6.1. Activation of IM02-to-scale connection

- Plug in the **IOIOI** connector of the IM02 communication module to **COM3 (IOIOI)** port of the scale by using a dedicated **PT0454** cable.

- Enter **<Peripherals / IM02 communication module / Aktive>** submenu and enable IM02 communication module ( - module active, - module inactive).

- Once the IM02 communication module has connected to the scale, the following information will be automatically displayed:

| | |
|---|---|
| **Status** | Active connection status, the status takes the following values: **Connected**, **Not connected**. |
| **Software rev.** | Software version of the IM02 communication module. |
| **Manufacture variant** | IM02 communication module manufacture version:<br>**IM02.1*** - standard (RS232, 4IN/4OUT, Virtual COM);<br>**IM02.2**** - standard + Analogue output 4-20mA. |

***)** - Simultaneously the scale menu is extended to include **<Inputs / Outputs>** submenu and list of available communication ports in the **<Communication>** submenu.
****)** - Simultaneously the scale menu is extended to include **<Inputs / Outputs>** submenu, list of available communication ports in the **<Communication>** submenu and **<Current loop>** submenu in the **<Peripherals / IM02 communication module>** menu.

### 31.6.2. Current Loop

*Applicable in the case of an active IM02.2 communication module*

In order to configure the current loop module go to **<Peripherals / IM02 communication module / Current loop>**.

Submenu structure **<Current loop>**:

| | |
|---|---|
| **Mode** | The choice of operating mode that determines current behavior of the current loop (see 12.4.2.1 of the manual). |
| **Adjustment** | Current loop module adjustment process (see 12.4.2.1 of the manual). |
| **Min threshold** | The determined calibration factor, corresponding to the **4mA** reading of the milliammeter connected to the measuring system. |
| **Max threshold** | The determined calibration factor, corresponding to the **20mA** reading of the milliammeter connected to the measuring system. |

#### 31.6.2.1. Operating mode

The choice of operating mode that determines current behavior of the current loop:

**Absolute value of mass** (default mode)

Working characteristics:

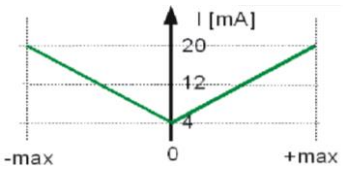


The **4mA** indication corresponds to a mass value equal **[0]**.
The **20mA** indication corresponds simultaneously to the mass value **[-max]** and **[+max]**.

Working characteristics:

**With negative range**

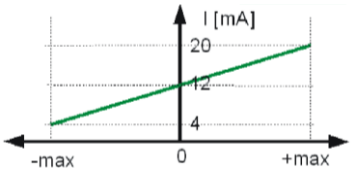


Value **4mA** is related to **[-max]** mass value.
Value **12mA** is related to **[0]** mass value.
Value **20mA** is related to **[+max]** mass value.

Working characteristics:

**Only positive values**

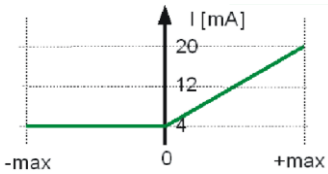


Value **4mA** is related to **[-max] ÷ [0]** mass values.
Value **20mA** is related to **[+max]** mass value.

### 31.6.2.2. Adjustment analogue output

The scale program enables determination of transient linear characteristics of 4-20mA module installed in IM02 communication module.

| | |
|---|---|
| ⚠ | ***To determine the transient characteristics, connect the current loop module according to the diagrams in the "IM02 communication module " user manual.*** |
| ⚠ | ***For readout of current values use milliammeter with min. range of 20 mA and resolution of 0.01 mA (20 mA – full range of current output module).*** |

**Procedure:**

- Enter **<Peripherals / IM02 communication module / Current loop / Adjustment>** submenu, **<Metered value [mA]>** edit box and keyboard are displayed.
- Enter the reading value of the milliammeter connected to the measuring system.
- Press → key to confirm changes, **<Metered value [mA]>** edit box and keyboard are displayed again.
- Repeat the above steps until **<Complete>** appears.
- Press ✓ button to confirm.
- At the same time, the **<Min Threshold>** and **<Max Threshold>** values will be determined, corresponding to the 4mA and 20mA readings of the milliammeter connected to the measuring system.
- Go to the home screen.

### 31.7. Modbus TCP

| | |
|---|---|
| ⚠ | ***For detailed information regarding Modbus protocol read „MODBUS TCP - Communication Protocol of PUE CY10”.*** |

**Modbus TCP** protocol can be used via the Ethernet communication interface. Configuration of Modbus TCP protocol settings can be found herein the **<Devices / Modbus TCP>** submenu.

Submenu structure **<Modbus TCP>**:

| | |
|---|---|
| **Active** | Activation/deactivation of the Modbus TCP transmission protocol. |
| **Port** | Number of port for transmission protocol (by default **502**). |

## 32. INPUTS / OUTPUTS

*Applicable in the case of an active IM02 communication module*

The PUE CY10 meter can support **4 inputs / 4 outputs** via connection to the IM02 communication module.

Access path: **<🏠 / Inputs/Outputs>**.

### 32.1. Input Setup

- Enter **<Inputs/Outputs>** submenu.
- Select **<Inputs>** parameter, list of available inputs is displayed.
- Edit selected input, list of functions to be assigned is displayed. Input functions list is identical like key functions list, read section 21.2.
- Select the function you want to assign to the input, next go back to the home screen.

| | |
|---|---|
| ⚠ | ***By default all functions are assigned with <None> value.*** |

### 32.2. Output Setup

Output gets activated at the moment of assigning it with a given function. Unassigned outputs remain inactive.

**Procedure:**

- Enter **<Inputs/Outputs>** submenu.
- Select **<Outputs>** parameter, list of available outputs is displayed.
- Edit selected output, list of functions to be assigned is displayed.

| | |
|---|---|
| **None** | Output inactive. |
| **Stable** | Stable weighing result over LO threshold value. |
| **MIN stable** | Stable weighing result below the MIN threshold. |
| **MIN unstable** | Unstable weighing result below the MIN threshold. |

| | |
|---|---|
| **OK stable** | Stable weighing result between MIN and MAX thresholds. |
| **OK unstable** | Unstable weighing result between MIN and MAX thresholds. |
| **MAX stable** | Stable weighing result over the MAX threshold. |
| **MAX unstable** | Unstable weighing result over the MAX threshold. |
| **! OK stable** | Stable weighing result out of OK threshold. |
| **! OK unstable** | Unstable weighing result out of OK threshold. |
| **MIN** | MIN threshold signalling. |
| **OK** | OK threshold signalling. |
| **MAX** | MAX threshold signalling. |
| **! OK** | Signalling of weighing result out of OK threshold. |
| **Zero** | Zero weighing result („zero” marker). |

- Select the function you want to assign to the output, next go back to the home screen.

| | |
|---|---|
| ⚠ | ***By default all functions are assigned with <None> value.*** |

## 33. MISCELLANEOUS PARAMETERS

This menu contains parameters facilitating balance operation language, date – time, beep sound, display adjustment, level control. To enter <Misc.> submenu, press Setup and next press <Misc.> button.

### 33.1. Interface Language

**Procedure:**

- Enter <Misc.> submenu.
  Select <Language> parameter and set language.
- Available languages: Polish, English, German, French, Spanish, Korean, Turkish, Chinese, Italian, Czech, Romanian, Hungarian, Russian, Serbian.

### 33.2. Date and Time

You can set date, time and their formats.
There are two ways to edit date and time settings:

- Press **<Date and time>** entry (home screen's top bar).
- Go to **<**Setup **/ Misc. / Date and time>**.

Enter the date and time settings; an on-screen keyboard is displayed. Set date and time: year, month, day, hour, minute; confirm the changes.

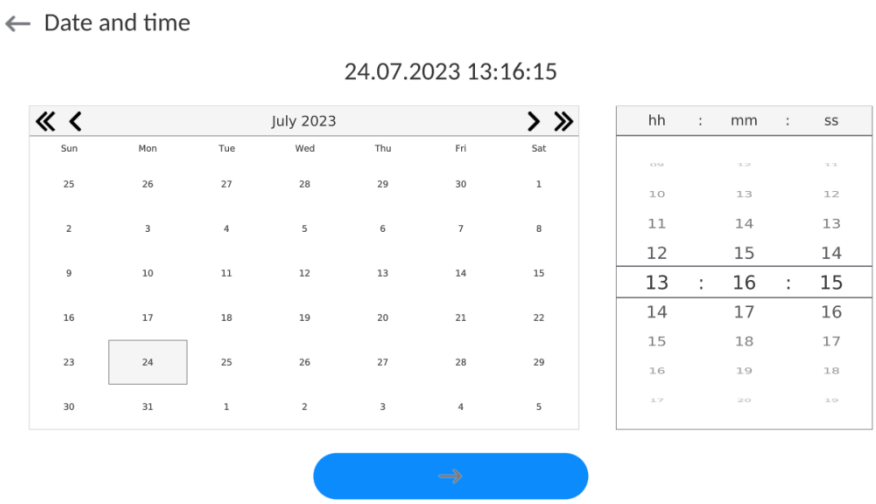


Additional functions of **<**Setup **/ Misc./ Date and time>** submenu:

| ***Name*** | ***Value*** | ***Description*** |
|---|---|---|
| Time zone | Europe, Warsaw | Parameter value: name of time zone/country. Particular name contains information regarding summer/winter time change. |
| Date and time | 2016.04.04 08:00:00 | Enter this parameter to set an internal clock and date. |
| Date format | yyyy.MM.dd * | Enter this parameter to select date format.<br>Options:<br>▪ d.M.yy, ▪ d/M/yy, ▪ dd-MM-yy,<br>▪ d.M.yyyy, ▪ dd/MM/yy, ▪ dd-MMM-yy,<br>▪ dd.MM.yy, ▪ dd/MM/yyyy, ▪ yy-M-dd,<br>▪ dd.MM.yyyy, ▪ M/d/yy, ▪ yy-MM-dd,<br>▪ dd.MMM.yyyy, ▪ M/d/yyyy, ▪ yyyy-M-dd,<br>▪ yyyy.MM.dd, ▪ MM/dd/yy, ▪ yyyy-MM-dd,<br>▪ yy/MM/dd, ▪ MM/dd/yyyy. |
| Time format | HH:mm:ss ** | Enter this parameter to select time format.<br>Options:<br>▪ H.mm.ss, ▪ H:mm:ss, ▪ H-mm-ss,<br>▪ HH.mm.ss, ▪ HH:mm:ss, ▪ HH-mm-ss,<br>▪ H.mm.ss tt, ▪ H:mm:ss tt, ▪ H-mm-ss tt,<br>▪ HH.mm.ss tt, ▪ HH:mm:ss tt, ▪ HH-mm-ss tt,<br>▪ h.mm.ss tt, ▪ h:mm:ss tt, ▪ h-mm-ss tt,<br>▪ hh.mm.ss tt, ▪ hh:mm:ss tt, ▪ hh-mm-ss tt. |
| Hide hour | No | Enabling/disabling date and time preview on the home screen. |
| Time from the Internet | Yes | Enter this parameter to update time and date of a network-connected balance with the network time and date. |
| Synchronized with the Internet | Yes | Parameter informing whether time and date values have been synchronized with the network data. |

*) - For date format: y – year, M – month, d – day
**) - For time format: H – hour, m – minute, s – second
<Date and time> parameter enables preview of declared date and time formats.

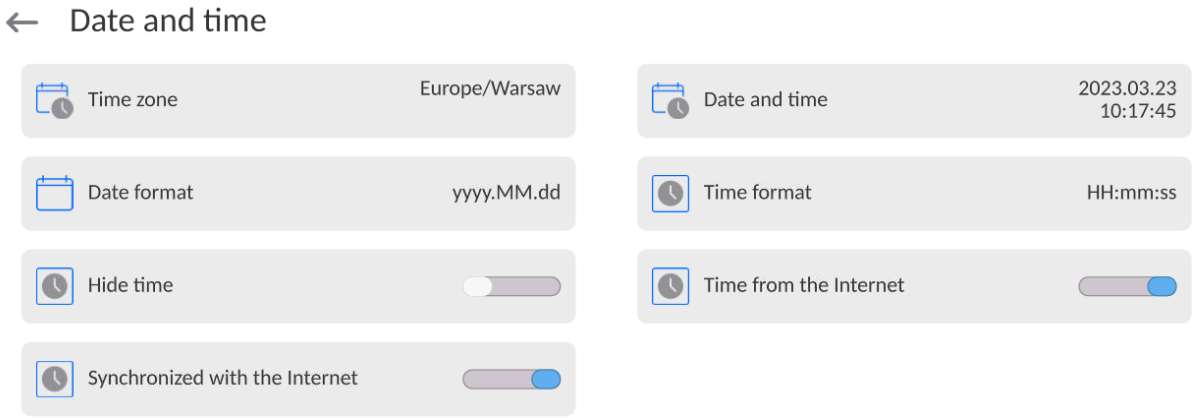


***Caution:*** *<Date and time> parameter can be accessed only by an operator with appropriate permissions. Permissions level can be modified by the administrator in <Permissions> menu.*

### 33.3. Extension Module

Extension module allows to:
- activate compliance with FDA 21 CFR procedures,
- run communication protocol extension, and
- disable standard licence (demo balance mode).

In order to run the mode, a license number is required for a particular option release. You must contact the manufacturer if you want to get the number.

**Procedure:**
Enter <Misc.> submenu, select <Extension modules> parameter and follow the prompts.

### 33.4. Sound

**Procedure:**
Enter <Misc.> submenu, select <Sound> parameter and set appropriate option:

| | |
|---|---|
| Printout confirmation sound | – Yes/No |
| Touch panel sound | – Yes/No |
| Sensors | – Yes/No |
| Button | – Yes/No |
| Volume | – range 0 - 100% |

### 33.5. Visual printout cofirmation

The option that allows you to visually confirm the measurement and record it in the weighing record base. After entering <> value, every saved measurement will be communicated to the operator through temporary illumination of the mass display in blue.

### 33.6. Sleep Mode

You can turn on display sleep mode.

**Procedure:**

- Press Setup key, next press: <Misc. / Display sleep mode> submenu.
- Select one of the following options: [None; 1; 2; 3; 5; 10; 15]. Digits stand for minutes. The software returns to the previous menu.

***Caution:***
*The display turns to sleep mode only when the balance is not operated (the indication on the screen remains the same). Upon mass change, or pressing any key on the panel, the balance returns to weighing.*

### 33.7. Display Brightness

Display brightness influences the duration of operation of battery-powered balance. The brighter the screen, the shorter the operation time. To make the balance work longer, reduce screen brightness.

**Procedure:**

- Press Setup, next press: <Misc./Display brightness> submenu.
- Enter desired value: [0% - 100%]. Display brightness changes automatically, the previous menu is displayed.

### 33.8. Vibration Detection

The program detects incorrect loading of the weighing pan with the sample. Incorrect loading can lead to increased indication errors. Activation of 'Vibration detection' function is signalled with display of a respective pictogram in the weighing result window.

If incorrectly carried out loading is detected, the pictogram turns to red .
The measurement result may be affected by a greater error.

**Procedure:**

- Enter <Misc.> submenu.
- Select <Vibrations detection> parameter.
- Select one of available options:
    - Yes – function on / No – function off

### 33.9. Level Control

The balance is equipped with Automatic Level Control mechanism.
You can define its operation for non-verified devices.

In the case of verified instruments, the settings are hidden and the balance operates in accordance with factory settings, i.e. <Active with lock>. The weighing process is possible only if the balance is properly levelled.

**Procedure:**

- Enter <Misc.> submenu.
- Select <Level control> parameter, an edit box is displayed.
- Select one of available options:
  - None – level indicator not displayed, the balance does not control level status,
  - Active – level indicator displayed, level status is signalled by colour (green→ level status OK, red→ levelling required).
  - Active with lock – level indicator displayed, level status is signalled by colour (green→ level status OK, red → levelling required). For red level indicator 'no Level' alert is displayed - weighing function is blocked.

***Caution:*** *For detailed information on levelling, read section 13.3 of this user manual.*

### 33.10. Decimal Point

Parameter allowing to set punctuation mark for a printout.

**Procedure:**

- Enter <Misc.> submenu.
- Select <Decimal point> parameter, an edit box is displayed.
- Select one of available options:
  - Dot
  - Coma

Submenu screen is displayed.

### 33.11. Proximity Sensors Sensitivity

Parameter allowing you to change sensitivity of the proximity sensors; the values range between 0 - 9.
By default, it is 5 - 7.

**Procedure:**

- Enter <Misc.> submenu.
- Select <Proximity sensors sensitivity> parameter, an edit box is displayed.
- Select one of available options. Menu screen is displayed.

### 33.12. Doorway Degree

Parameter for setting how wide the door is to be opened in the case of an automatic operation.
Default value: <100 %> - maximally wide open door.

**Procedure:**

- Enter <Misc.> submenu.
- Select <Doorway degree> parameter, an edit box is displayed.
- Set <75%> value.
- Confirm. Menu is displayed.

### 33.13. Automatic Ionization

Parameter for switching the ionization on and setting the ionization state.
Options: None/Low/High.

**Procedure:**

- Enter <Misc.> submenu.
- Select <Automatic ionization> parameter, settings window is displayed.
- Set <Low> value.
- Confirm. Menu is displayed.

### 33.14. Autotest

<AUTOTEST> function has been designed to help you assess balance operation and to diagnose the cause of weighing errors (exceeding the maximum permissible values).
AUTOTEST facilitates systematic optimisation of balance settings, which is necessary to maintain the best possible repeatability and weighing time at the workstation. The function allows you to monitor the parameters at an optional moment and save records from carried out tests.

There are two modules:
AUTOTEST FILTER; AUTOTEST GLP.
Prior to each test, the balance controls level status, temperature and humidity.

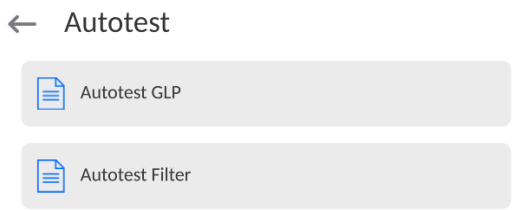


**AUTOTEST FILTER**
Procedure consisting in loading and unloading of the internal weight for all possible 'Filter' and 'Value release' settings; the test requires 10 repetitions. It controls 2 parameters: 'Repeatability' and 'Stabilization time'.

The test takes approximately 1 hour. Upon completion, information regarding results is obtained.
Optimal settings for particular ambient conditions are provided.

Autotest Filter enables:

- to obtain the highest measurement repeatability and the shortest measurement time with acceptable value of repeatability;
- test results are stored in the balance memory until it is turned off,
- test results printout, direct and fast selection of optimal parameters.

Upon completed autotest, a summary with the results is displayed. Information regarding filter settings is provided automatically via respective pictograms:
- settings providing the fastest measurement (the shortest measurement time).

- settings providing the most accurate measurement (the lowest possible value of deviation for 10 measurements).
- settings providing optimal measurement (the lowest value of time and deviation product).

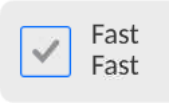

- current settings for filters.

Measurement results:

*Filter type.
*<Value release> parameter value.
*Repeatability of indications expressed as standard deviation.
*Average time of measurement stabilization.

*Example:*

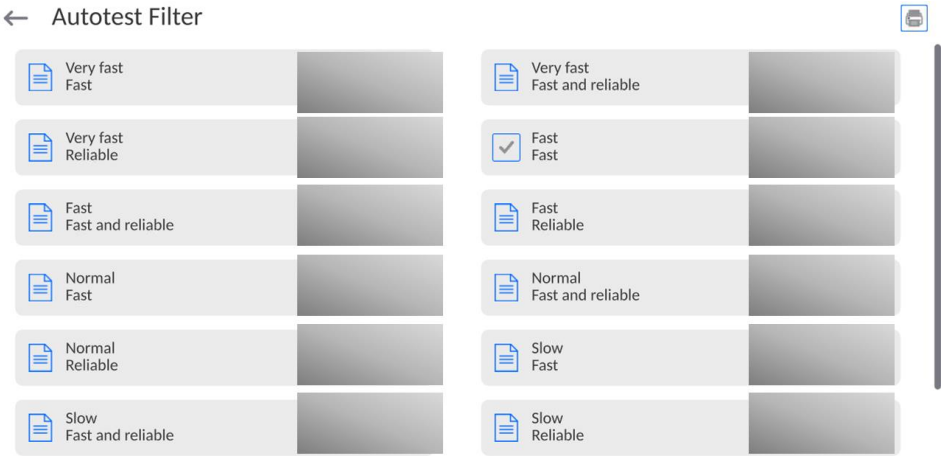


**Report example:**

*---------- Autotest Filter: Report ----------*

| | |
|---|---|
| *Balance type* | *XA 5Y* |
| *Balance S/N* | *442566* |
| *Operator* | *Hubert* |
| *Software ver.* | *NL1.6.5 S* |
| *Date* | *2015.05.07* |
| *Time* | *09:34:48* |

*----------*

| | |
|---|---|
| *Reading unit* | *0.0001/0.0001 g* |
| *Internal weight mass* | *148.9390 g* |
| *Temperature: Start* | *25.26 °C* |
| *Temperature: Stop* | *25.66 °C* |

*----------*

| | |
|---|---|
| *Filter* | *Very fast* |
| *Value release* | *Fast* |
| *Repeatability* | *0.0042 g* |
| *Stabilization time* | *4.505 s* |

*.*

| | |
|---|---|
| *Filter* | *Very slow* |
| *Value release* | *Reliable* |
| *Repeatability* | *0.0207 g* |
| *Stabilization time* | *5.015 s* |

*Signature*

*.....*

**Procedure:**
Upon 'Autotest Filter' function activation, the process starts automatically. A progress bar is displayed. Upon process completion, a summary is displayed and the current filter settings are provided. The report can be printed.

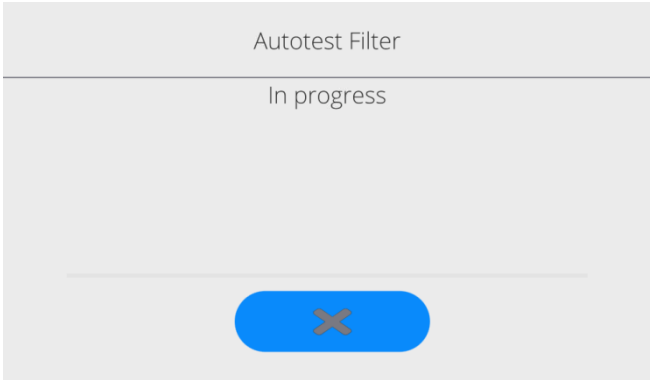


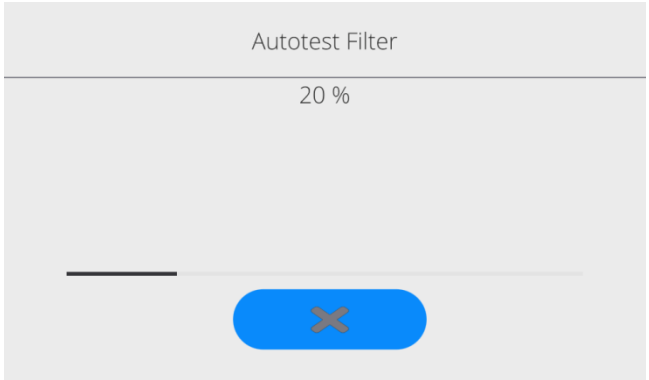


You can abort the process at any moment. To do that, press <> button.

**AUTOTEST GLP**
Autotest GLP is a test of repeatability of internal weight loading and determination of indication error, which error is referred to the balance maximum capacity.

**Procedure:**
- load the internal weight twice, next load the internal weight ten times,
- adjust the balance,
- calculate and record the value of standard deviation.
- for a balance with automatic door, the door opening and closing test is carried out.

Autotest GLP function enables:
Report display and printout,
Record of a report containing basic data, ambient condition values and test results.

Test results:
*Deviation for maximum capacity.
*Value of repeatability expressed as standard deviation.
*Door test result (positive / negative).

**Report example:**

*---------- Autotest GLP: Report ----------*

| | |
|---|---|
| *Balance type* | *XA 5Y* |
| *Balance S/N* | *400010* |
| *Operator* | *Admin* |
| *Software ver.* | *NLx.x S* |
| *Date* | *2012.01.16* |
| *Time* | *09:17:16* |

*----------*

| | |
|---|---|
| *Measurements quantity* | *10* |
| *Reading unit* | *0.0001 g* |
| *Internal weight mass* | *140.094 g* |
| *Filter* | *Average* |

*Value release* *Fast and precise*

---

*Deviation for Max.* *-0.0118 g*
*Repeatability* *0.00088 g*

*Signature*
.....

**Procedure:**
Press entry with the test name, a message box is displayed.
Do one of the following:

- Start subsequent AUTOTEST GLP process,
- Preview results of completed autotests, and export all saved test results as a *.csv file,
- Delete all saved test results.

You can abort the process at any moment by pressing <X> button.
Results of carried out autotests are displayed in a table (each line features date and time of autotest procedure and its result).
To preview particular autotest data, press a respective table line.
In order to print a result of a single autotest, enter its details (see above) and generate a printout by pressing <Print> key located on the top of the display.
Autotest results can be exported by pressing <Export> entry in the window with all saved reports. Data is sent to a USB flash drive, connected to the balance USB port, as a *.csv file.

### 33.15. Start-Up Logo

*(option enabled only for authorized operators)*

The parameter enables you to change the logo that is displayed at the moment of balance start-up.

### 33.16. Export of System Events

*(option enabled only for authorized operators)*

The parameter enables you to generate a special type of file that is automatically saved to a USB flash drive, plugged to the USB port. The file helps RADWAG service to diagnose the cause of problems occurring during balance operation.

**Procedure:**

- Plug a USB flash drive to the balance USB port.
- Enter <Misc.> submenu.
- Select <Export system events> parameter.
- The software generates a file and automatically saves it on the USB flash drive.
- The generated file has to be sent to RADWAG.

### 33.17. Text-to-speech conversion

Parameter for enabling the processing of group names and menu parameters into speech emitted from the indicator speakers. The emitted voice is only in English.

# 34. SCHEDULED TASKS

This parameter provides settings for planning a cyclic performance of particular operations, e.g. balance adjustment or display of prompts.

## 34.1. Adjustment

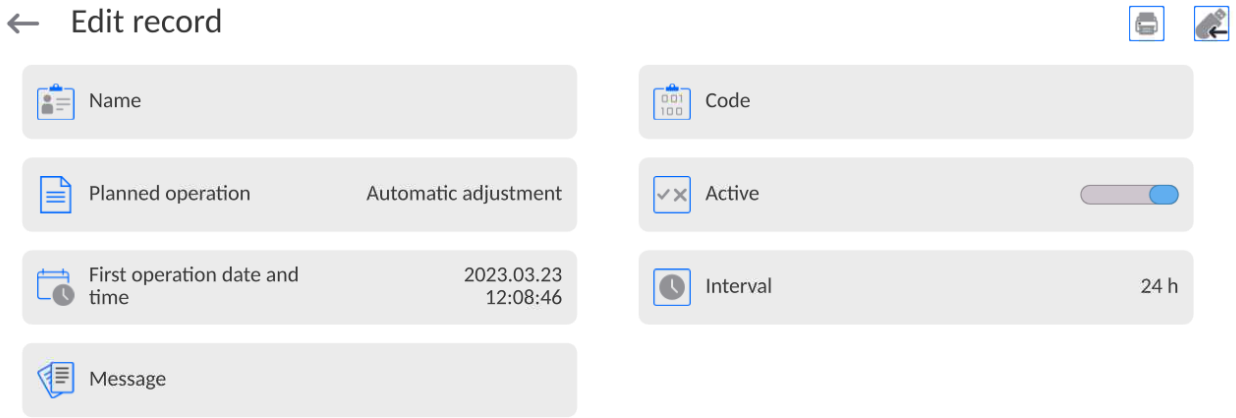


<Scheduled adjustments> parameter allows you to precisely specify the time for adjustment performance and the interval between successive adjustments. The parameter is not connected with automatic adjustment and its criteria (time, temperature). You can schedule when internal and external adjustments are to be performed. In order to design a schedule for external adjustment, it is necessary to record mass standards for adjustment performance into the balance memory.

**Procedure:**
Enter data of mass standards intended for external adjustment performance; to do it:
Enter operator menu, select <Adjustment> submenu and find <Adjustment weights> parameter.

Enter operator menu, select <Scheduled tasks> parameter.
A window opens in which an authorised user (Administrator) can add entries with scheduled adjustments.

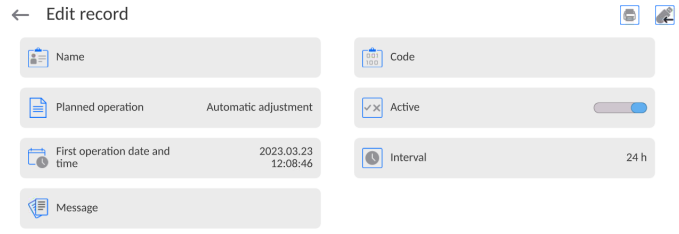


In order to add a new entry, press button, wait for a window with data on the scheduled adjustment to open.

Select task: automatic adjustment (internal or external).

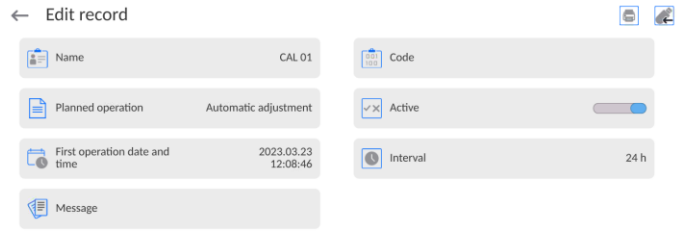


For automatic adjustment option, enter data on the adjustment and its schedule.

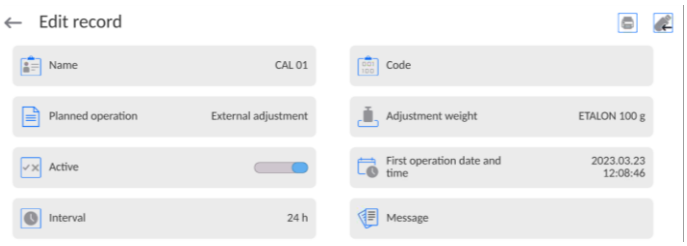


For external adjustment option, enter data on the adjustment, mass standard used for the adjustment performance and its schedule.

When all necessary data has been introduced, return to the previous window. The window features newly added entry.

Upon entering all data, exit the menu.

Now all the adjustments are carried out automatically as scheduled and with specified time intervals.

### 34.1. Message

This parameter enables to declare precise time and time interval for display of a special prompt informing the user on the necessity to take up a particular action.

Enter user menu, next enter <Scheduled tasks> submenu.
In order to add an operation, press <> button placed in a toolbar.

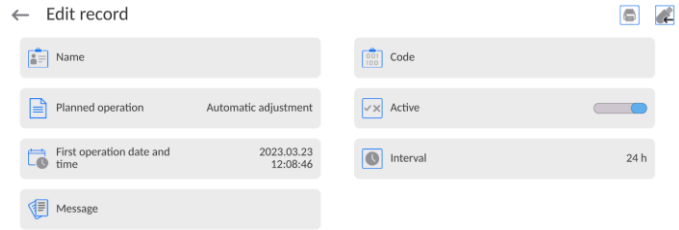


<Edit record> box is displayed, press <Scheduled tasks> field. <Scheduled tasks> box is displayed.

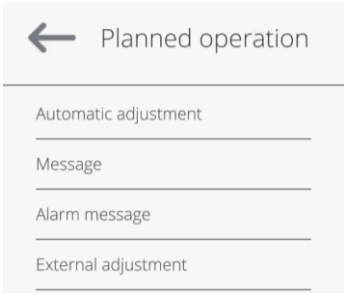


Select <Message> option.

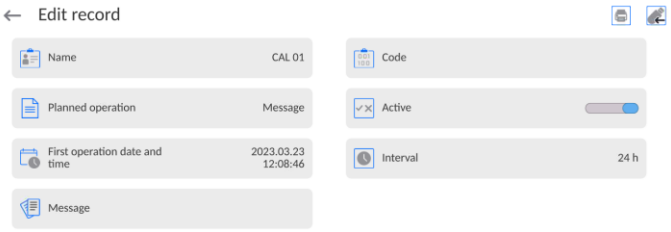


Message settings box is displayed.
Set message display frequency (first display, time interval), select <Message> parameter and enter message text.

Press <→> button to confirm.

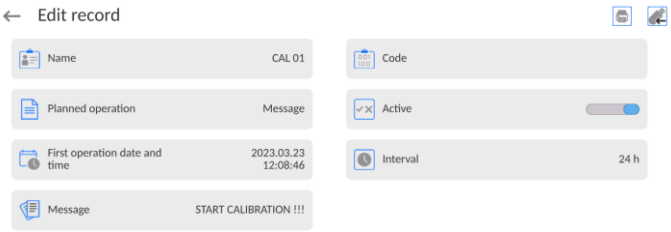


A previous window is displayed.

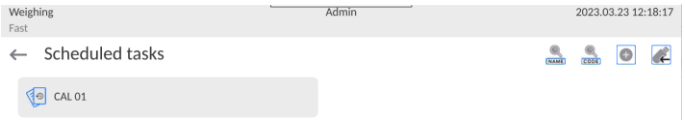


In <Scheduled tasks> box, a newly added operation is displayed.
Go to the home screen.

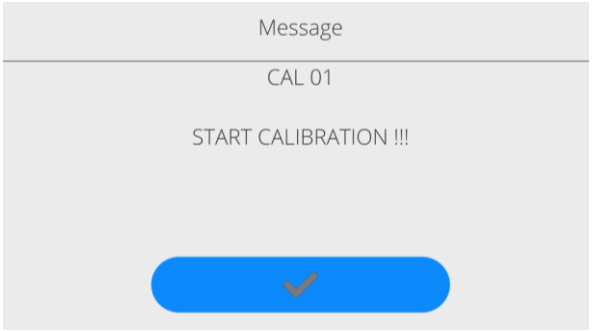


When message display criterion is met (time), message box is displayed automatically.
Press <→> button, the message box gets closed, perform the operation.

## 35. UPDATE

Update function enables update of:

- User-related area: APPLICATION.
- Main board (administrator exclusively).

Update takes place automatically by loading data from a USB flash drive connected to the balance USB port.

**Procedure:**

- Prepare a USB flash drive with the update file. Required file extension: **.lab4.*
- Connect the USB flash drive to the USB port of the indicator.
- Log in as the Administrator.
- Press button to enter the balance menu.
- Select <Update> option.
- Select <Application> field.
- The display previews the content of the USB flash drive; search for the update file and press its name.
- The balance is automatically restarted, and the balance application is automatically updated.
- If the balance does not restart, force it to restart by turning it off and on again.

Update of the main board file is analogous; required file extensions are: *. cm4mbu – main board.

## 36. ABOUT (system info)

'About' menu provides information on the balance and balance program. Most parameters in this menu are for the information purpose only.

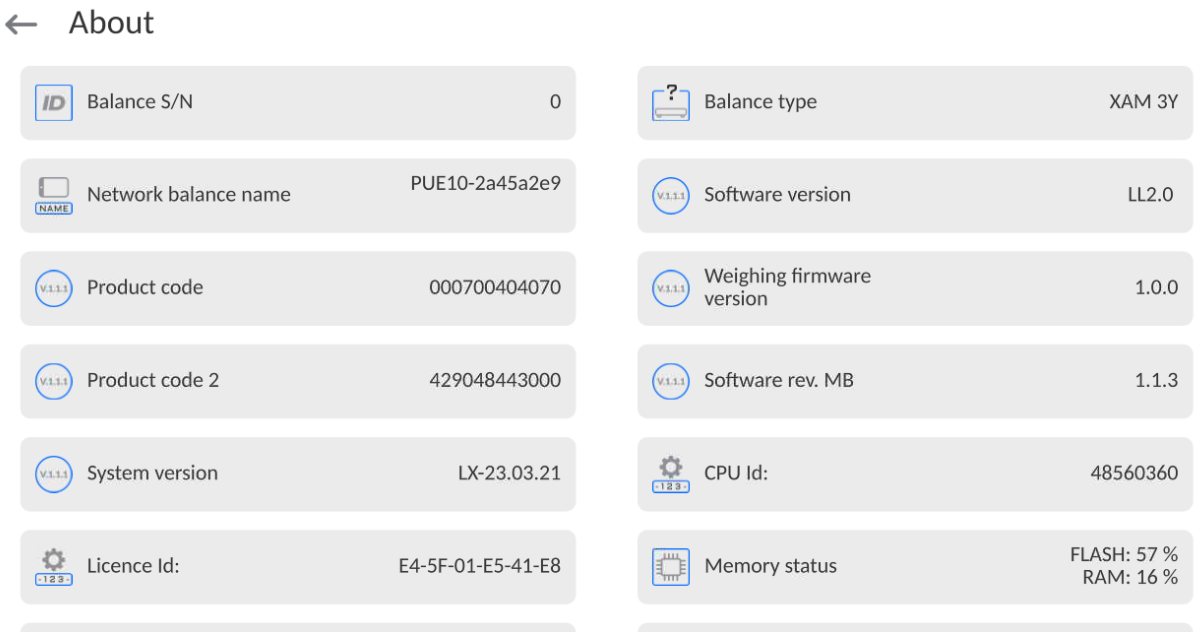


<Ambient conditions> parameter enables preview of current ambient conditions: temperature, humidity, pressure (if the balance features ambient conditions sensors).
<Print settings> parameter enables you to send all parameters to a printer port.

# 37. COMMUNICATION PROTOCOL

| | |
|---|---|
| ⚠ | ***Detailed description of protocol of communication between the balance and the computer is to be found in 'CBCP-07' manual.*** |

## 37.1. Manual Printout / Automatic Printout

It is possible to generate printouts either manually or automatically.

- Manual printout: wait for a stable indication and press ↵ button.
- Automatic printout is generated automatically in accordance with the parameters set for the automatic printout (read section 12.5).

The content of a printout depends on the settings of <Standard printout> parameter - <Weighing printout template> (read section 12.5).

**Mass printout format:**

| 1 | 2 | 3 | 4 -12 | 13 | 14 | 15 | 16 | 17 | 18 |
|---|---|---|---|---|---|---|---|---|---|
| stability marker | space | character | mass | space | unit | | | CR | LF |

| | |
|---|---|
| Stability marker | [space] if stable<br>[?] if unstable<br>[!] if air buoyancy compensation function is on<br>[^] if high limit is out of range<br>[v] if low limit is out of range |
| Character | [space] for positive values<br>[-] for negative values |
| Mass | 9 characters with decimal point, right justification |
| Unit | 3 characters, left justification |

**Example:**

_ _ _ _ _ _ **1 8 3 2 . 0** _ **g** _ _ **CR LF** - a printout generated, with reference to <Weighing printout template> settings, from a balance upon pressing ↵ key:

| | | | |
|---|---|---|---|
| N (measurements quantity) | **NO** | Universal variable 1...5 | **NO** |
| Date | **NO** | Net | **NO** |
| Time | **NO** | Tare | **NO** |
| Level status | **NO** | Gross | **NO** |
| Customer | **NO** | Current result | **NO** |
| Warehouse | **NO** | Supplementary unit | **NO** |
| Product | **NO** | Mass | **Yes** |
| Packaging | **NO** | Non-standard printout | **NO** |

## 38. PERIPHERAL DEVICES

The 5Y series balance can operate with the following peripheral devices:

- computer,
- receipt printer,
- PCL6 printer, (*Printer Command Language*),,
- barcode scanner,
- fingerprint reader,
- peripheral device operating in ASCII communication protocol.

***Caution:*** *Only accessories listed on the RADWAG website can be connected to the balance.*

## 39. ERROR MESSAGES

| | |
|---|---|
| Max weighing threshold exceeded<br>Unload the weighing pan | Display capacity out of range<br>Unload the weighing pan |
| Min weighing threshold exceeded<br>Install weighing pan | Zeoring out of range<br>Press tarring button or restart the balance |
| Start mass out of range<br>Install weighing pan | Zeoring/tarring time out of range<br>Weighing indication unstable |
| Tarring out of range<br>Press zeoring button or restart the balance | |

| | |
|---|---|
| -no level- | Balance not levelled |
| -Err 100- | Weighing module restart |
| In process | An ongoing process in the course of which the indication may be unstable (automatic feeder – the process of feeding a pill, or mass comparator – the process of load change) |

## 40. ADDITIONAL EQUIPMENT

| Type | Name |
|---|---|
| RTP-UEW80 or RTP-RU80 | Dot printer |
| | PCL6 Printer |
| LS2208 | Barcode scanner |
| SAL | Anti-vibration table for XA series balances |
| | PC keyboard |

**PC software:**

- **„LABEL EDITOR”**

# 41. ANNEX B – Programmable Buttons List

| Symbol | Function | Symbol | Function |
|---|---|---|---|
| | None | | Adjustment |
| | Profile selection | g-ct-lb | Unit |
| | Product | LO HI | Checkweighing thresholds |
| | Packaging | | Zero |
| | Customers | | Tare |
| | Operator | | Tare setting |
| | Warehouse | | Disable tare |
| | Parameters | | Enable tare |
| | Accept | -123- | Series number |
| | Abort | -ABC- | Batch number |
| | Help | 1 VAR | Universal variable 1 |
| | Local parameters | 2 VAR | Universal variable 2 |
| | Working modes | 3 VAR | Universal variable 3 |
| | Log out | 4 VAR | Universal variable 4 |
| | Voice command | 5 VAR | Universal variable 5 |
| | Create screenshot | 1...2... | Label count |
| | Print out | Σ 1...2... | C label count |
| | Print header | ΣΣ 1...2... | CC label count |
| | Print footer / C label | 0.0 | Hide 1 digit |
| | Print CC label | 0.00 | Disable displaying last two digits |
| | Statistics | 0.000 | Disable displaying last three digits |
| | Add to statistics | | Assign reference sample mass to product |
| | Zero statistics | 2.47 | Parts counting: Set part mass |

| | | | |
|---|---|---|---|
| | Zero CC statistics | | Parts counting: Determine part mass |
| | Zero all statistics | | Parts counting: Reference sample quantity - 5 pcs |
| | Print and zero statistics | | Parts counting: Reference sample quantity - 10 pcs |
| | Print and zero CC statistics | | Parts counting: Reference sample quantity - 20 pcs |
| | Pipettes | | Parts counting: Reference sample quantity - 50 pcs |
| | Animal weighing | | Parts counting: Reference sample quantity - 100 pcs |
| | Target value | | E-signature |
| | Percent weighing: Set reference sample mass | | PGC/SQC: Ongoing-control info |
| | Percent weighing: set 100% | | Close door |
| | Density: Solids density | | Open door |
| | Density: Liquid density | | Open/close door |
| | Density: air density | | Formulation |
| | Density - picnometer | | Formulation with multiplier |
| | Differential weighing: Series | | Formulation with target mass |
| | Differential weighing: Sample | | Formulation using out of database ingredients |
| | Differential weighing: Weighing A | | Formulation: Skip ingredient |
| | Differential weighing: Weighing B | | Close lid of the pipette calibration chamber |
| | Differential weighing: Tare | | Open lid of the pipette calibration chamber |
| | Differential weighing: weighing T and A | | Close lid of the pipette calibration chamber |
| | Differential weighing: Deleting values | | Stop ionization |
| | Differential weighing: Copy tare | | Start ionization |
| | Differential weighing: Add sample | | Start/stop ionization |