USER GUIDE

PSW/DUAL

Radwag

Distributed by AKRIBIS

User manual

IMMU-40-04-10-25-EN

Weighing Tables

PSW
PSW/DUAL

radwag.com
Scan the QR code to view additional scientific material that may be of interest to you.
There you will find more useful information in an accessible format!

AKRIBIS www.akribis.info contacto@akribis.info

OCTOBER 2025

"The drawings, photos and graphics
used are for illustrative purposes only."

Contents

1. INTENDED USE 3
2. TABLE UNPACKING 3
2.1. Table Equipment 4
2.1. PSW Table Unpacking – Steps 4
2.2. PSW/DUAl Table Unpacking - Steps 8
3. DIMENSIONS 12
4. PSW TABLE ASSEMBLY 14
4.1. Workstation Assembly 14
5. PSW/DUAL TABLE ASSEMBLY 20
5.1. Workstation Assembly 20
6. MAINTENANCE 26

1. INTENDED USE

The weighing table is intended for microbalances and analytical balances. It may also be used as a pipettes calibration workstation.
The table is designed to enable fast, comfortable and ergonomic operation.
The external construction of the table comprises an in-built separated anti-vibration table with stone top. With this potential vibrations are eliminated and balance stability time is shortened.
The table is both functional and ergonomic.

Intended area of use:

- Pipette calibration workstation;
- Laboratory workstation for microbalances;
- Laboratory workstation for analytical balances;

There are two versions of the workstation:

- PSW professional single weighing table
- PSW/DUAL professional dual weighing table

The workstation comprises two elements:

- desk with lockers,
- anti-vibration table with stone top.

The desk is made of HPL laminated chipboard. It is equipped with two lockers and a sliding shelf for a computer, a keyboard and a mouse. The weighing table provides space for an emergency UPS power supply or a power strip.
At the back of the table top there is a platform for placing an LCD monitor.

The anti-vibration table is made of powder-coated stainless steel. The top of the anti-vibration table is a 410×270×115 mm granite stone.

2. TABLE UNPACKING

Take all table components out of the packaging. Make sure to follow the steps described in the following sections of the user manual. Check if nothing is missing.

2.1. Table Equipment

	PSW table	*PSW/DUAL table*
Internal frame supporting stone top	1	1
External design of the workstation	1	1
Stone top - balance base	1	2
Monitor stand	1	1
Liquid container	1	1

2.1. PSW Table Unpacking – Steps

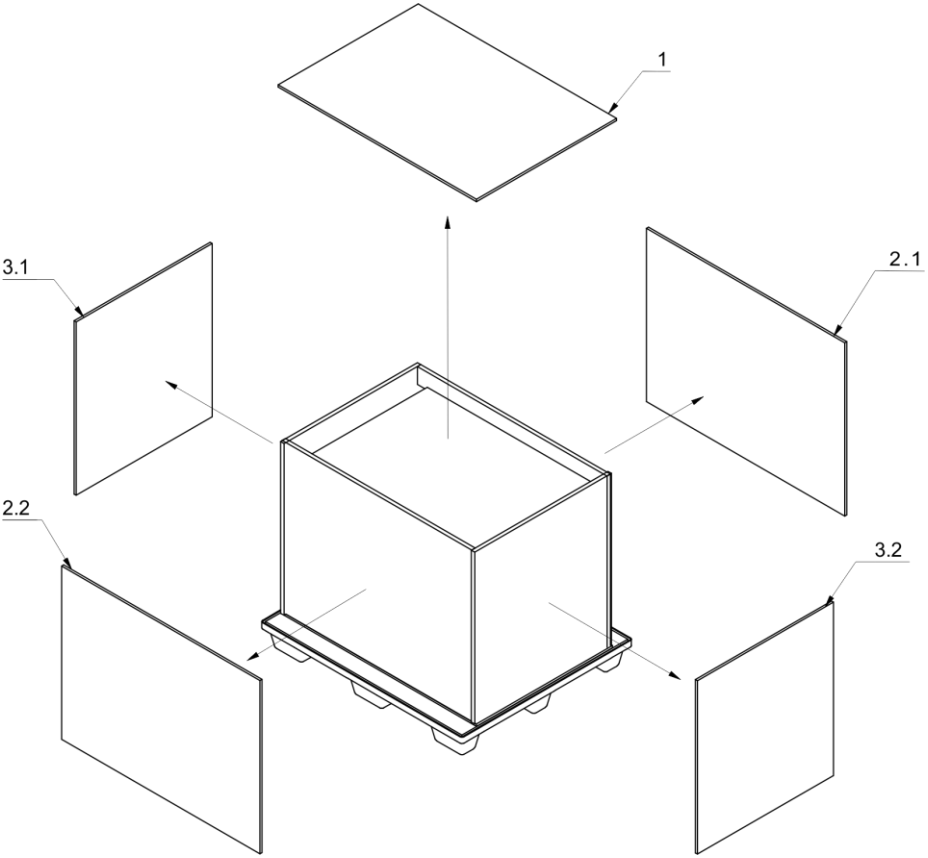

Undo the OSB boards (1; 2.1; 2.2; 3.1; 3.2), follow arrow-indicated direction.

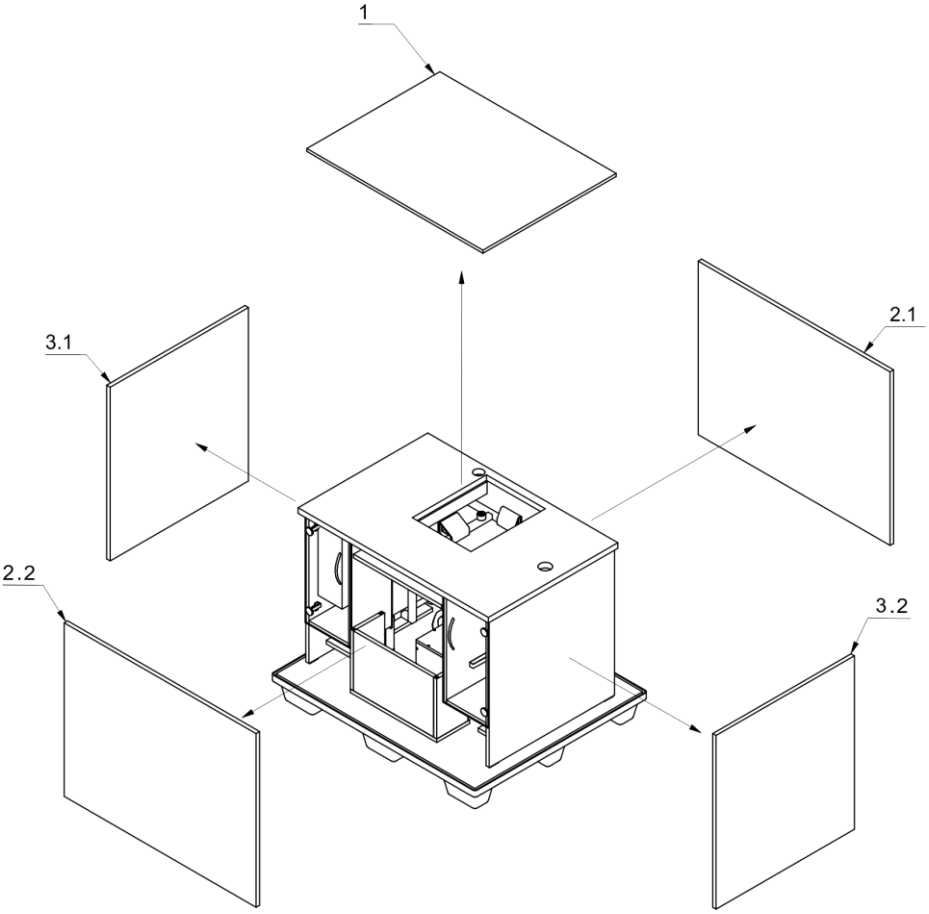

Remove the protective styrofoam panels (1; 2.1; 2.2; 3.1; 3.2), follow arrow-indicated direction.

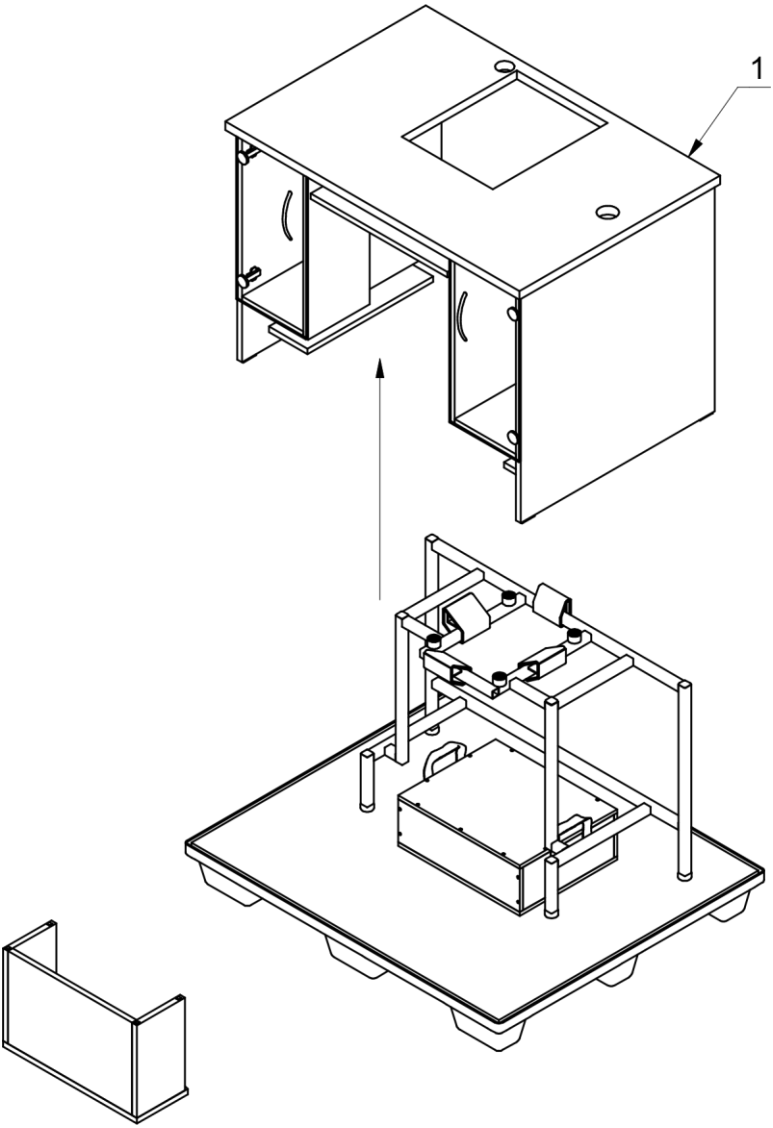

Remove the weighing table (1) from the pallet, follow arrow-indicated direction.

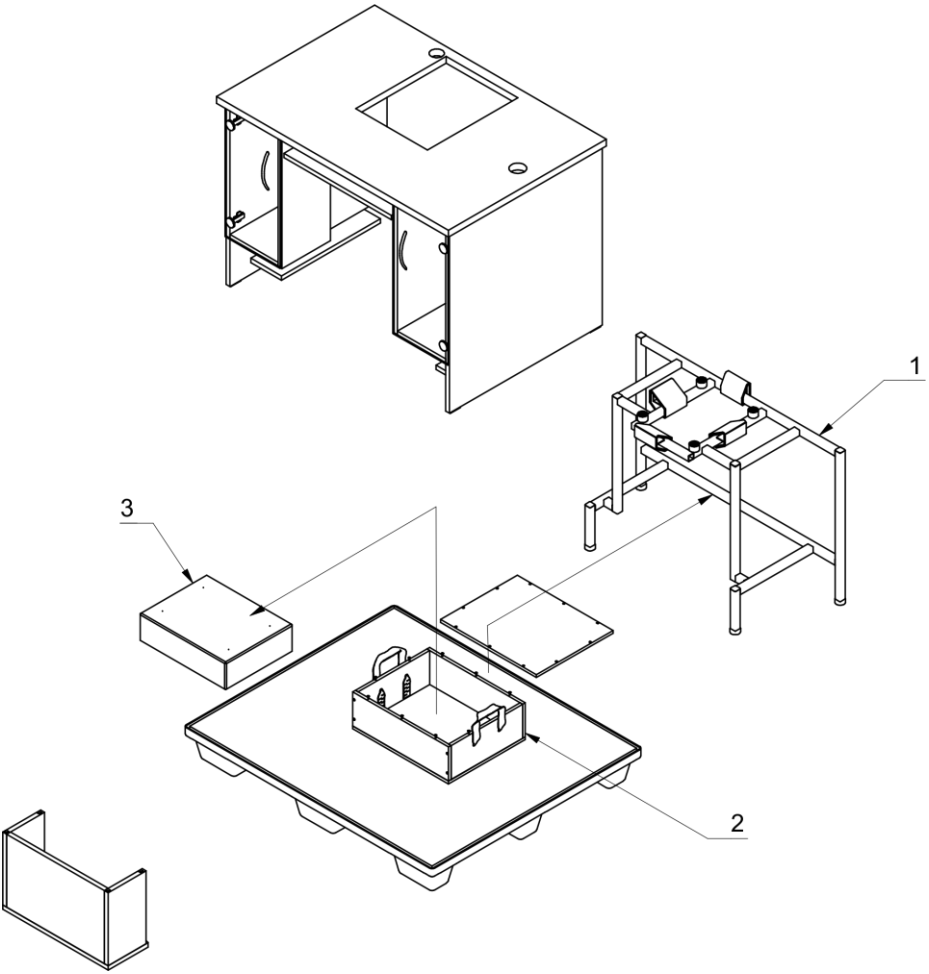

Remove the plate base (1) from the pallet, follow arrow-indicated direction.
Take the stone (3) out of the box (2), follow arrow-indicated direction.

2.2. PSW/DUAl Table Unpacking - Steps

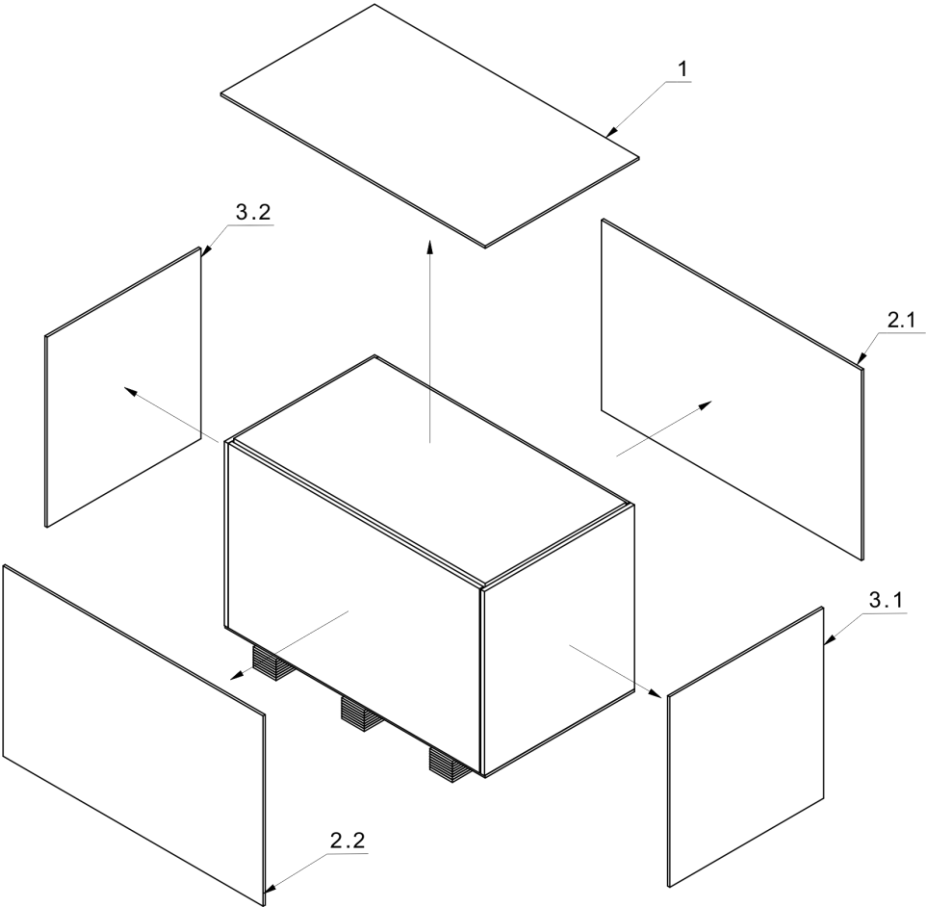

Undo the OSB boards (1; 2.1; 2.2; 3.1; 3.2), follow arrow-indicated direction.

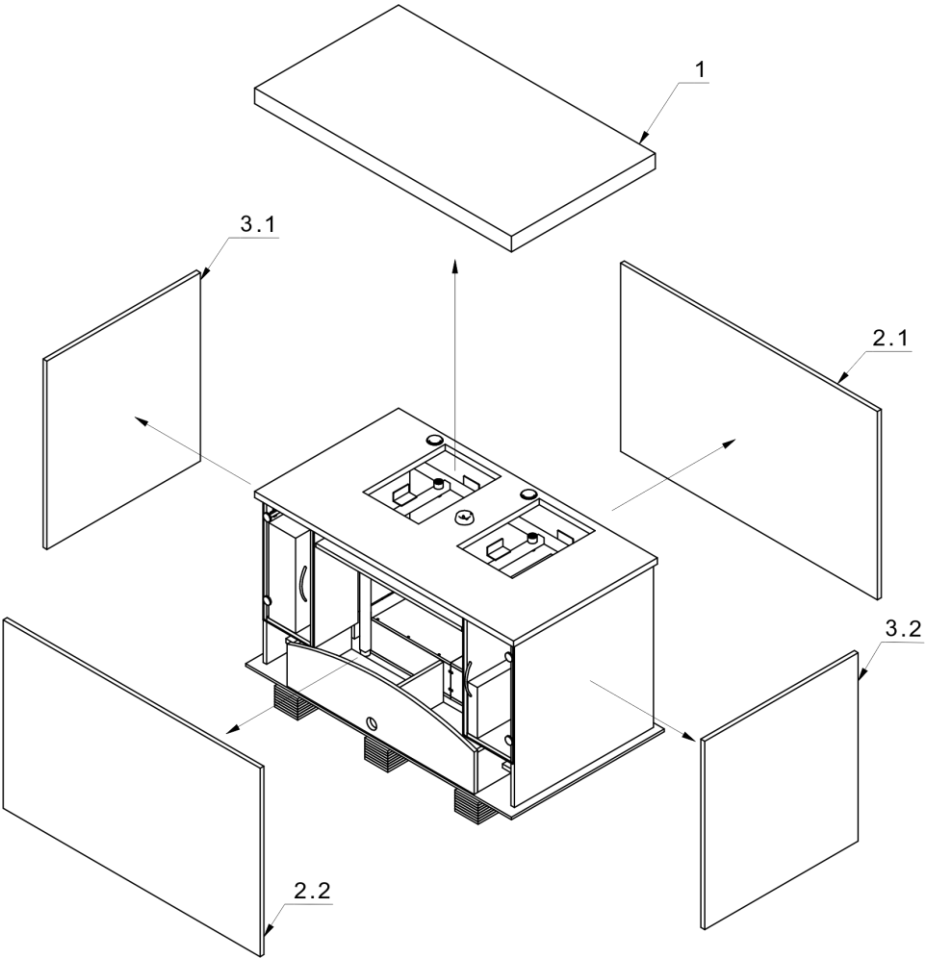

Remove the protective styrofoam panels (1; 2.1; 2.2; 3.1; 3.2), follow arrow-indicated direction.

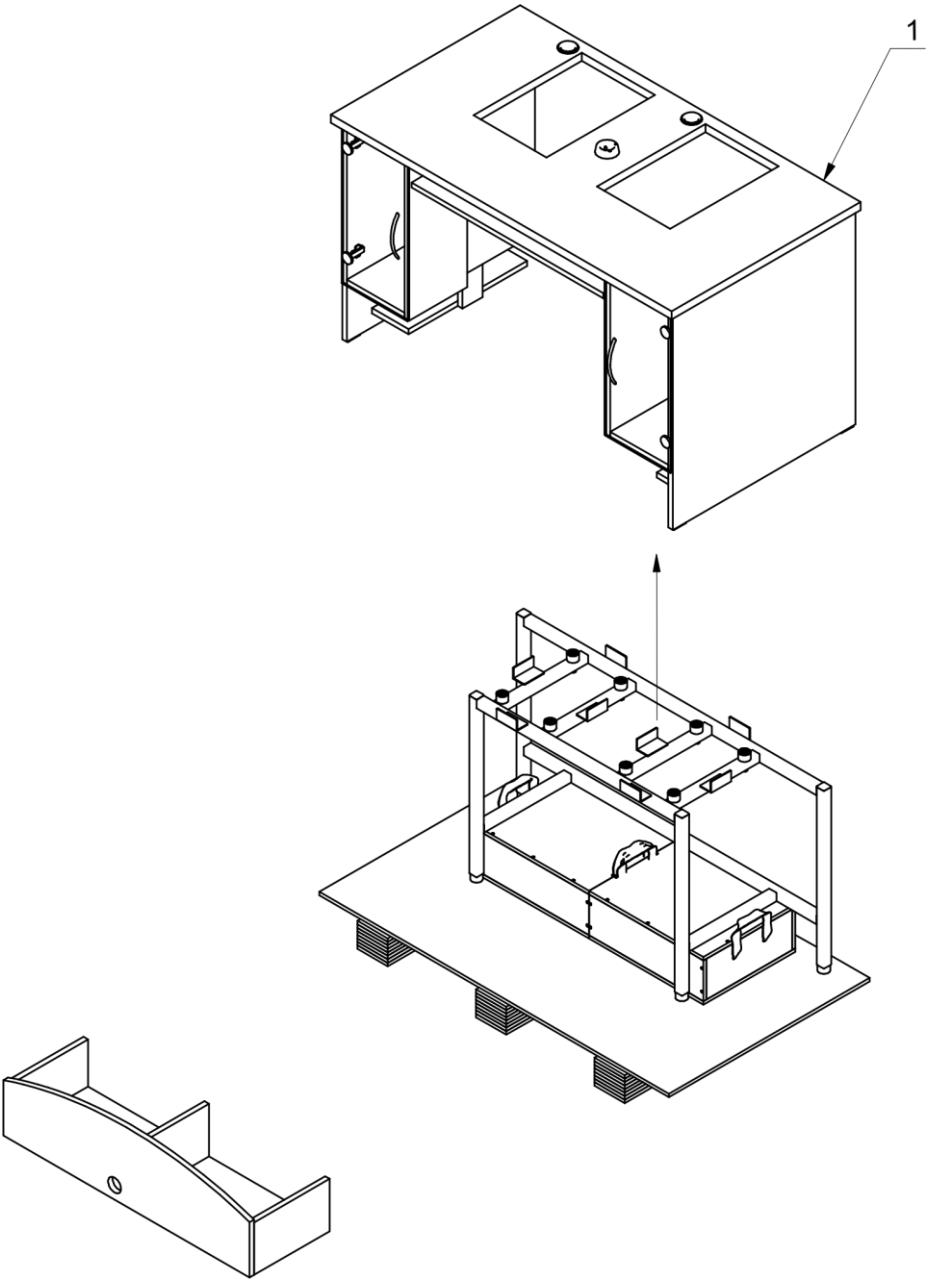

Remove the weighing table (1) from the pallet, follow arrow-indicated direction.

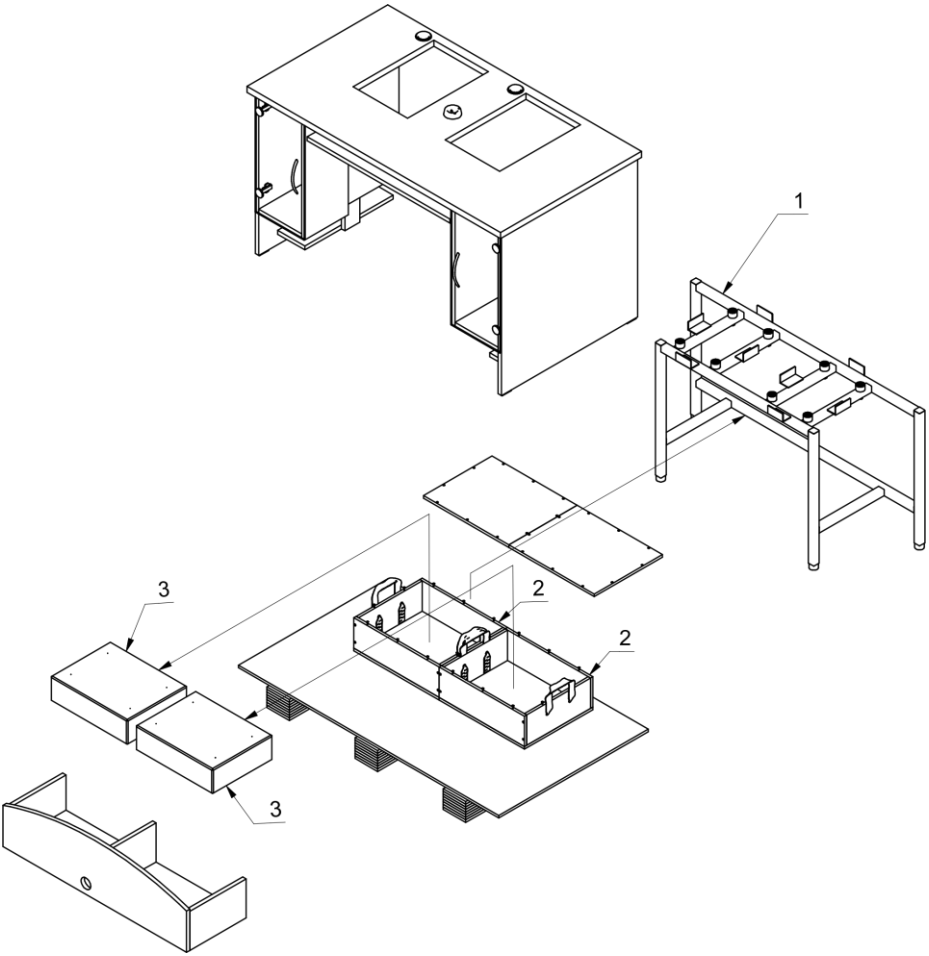

Remove the plate base (1) from the pallet, follow arrow-indicated direction.
Take the stones (3) out of the box (2), follow arrow-indicated direction.

3. DIMENSIONS

PSW table

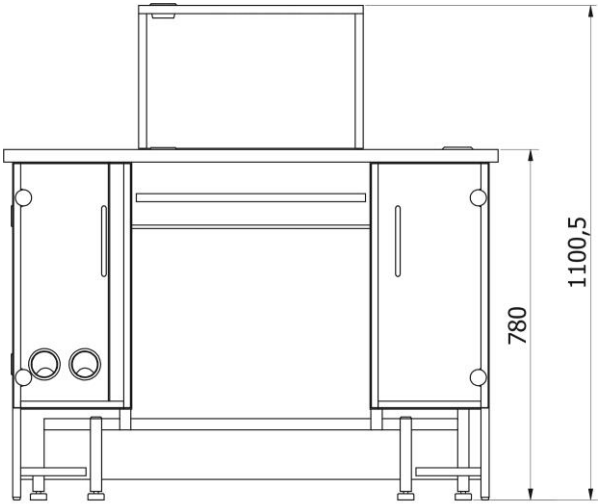

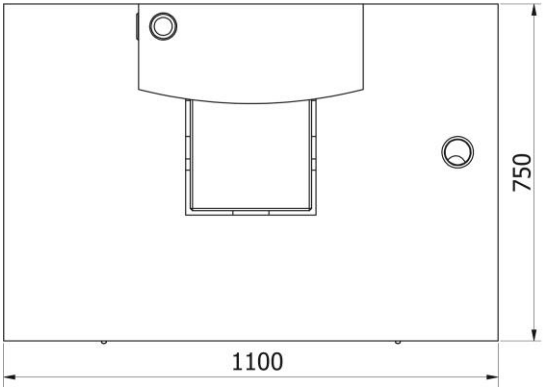

PSW/DUAL table

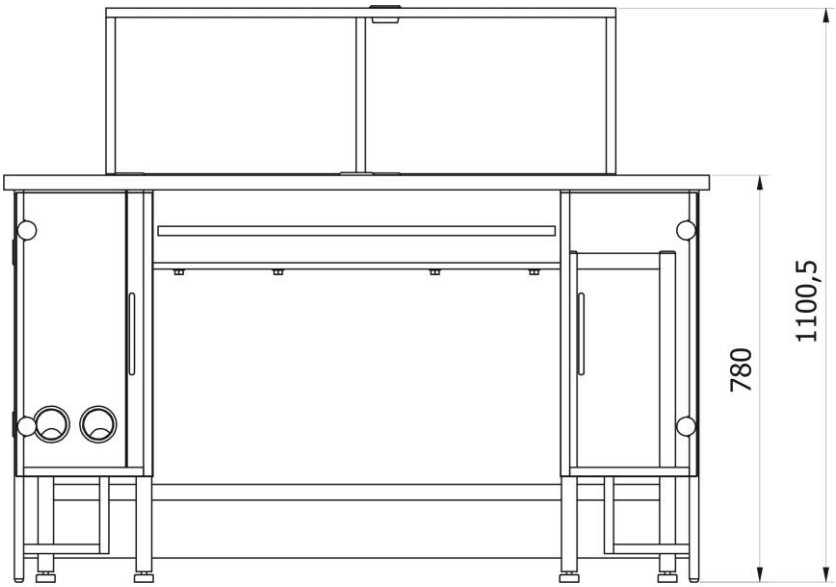

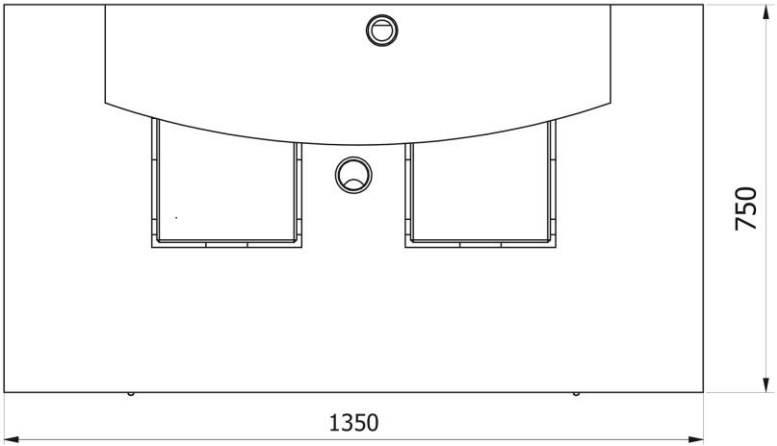

4. PSW TABLE ASSEMBLY

4.1. Workstation Assembly

CAUTION: Be extremely careful when assembling the workstation since some components, e.g. stone top, are heavy and may pose a hazard.

Follow the below steps to assembly the workstation.

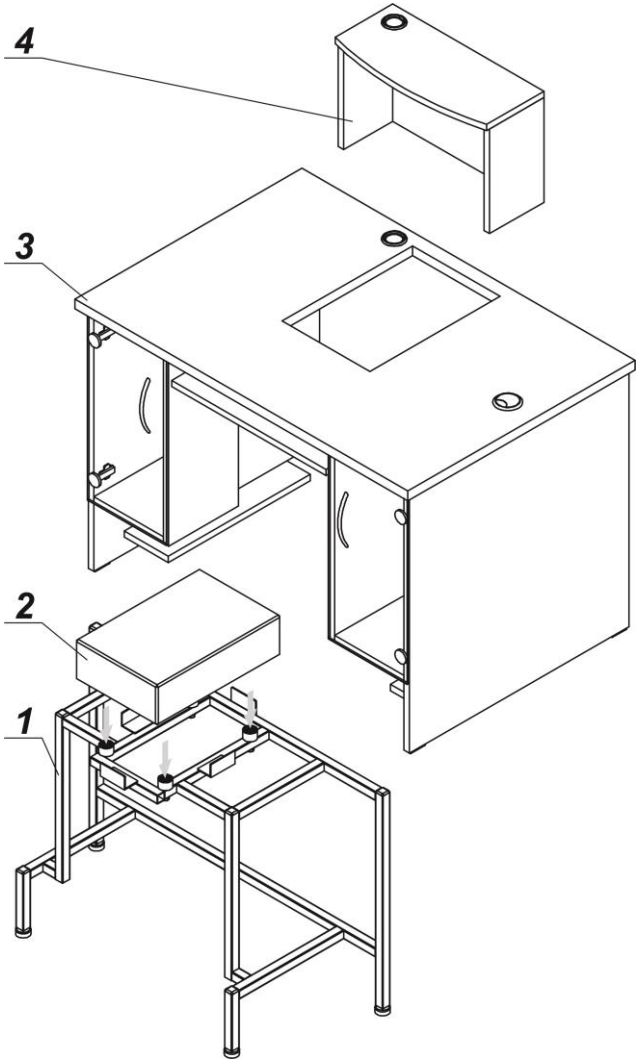

Procedure:

1. Place the internal frame (1) on its target spot.
2. Place the stone top (2) onto shock absorbers. Mind that the top cannot touch side stops.
3. Install the external design (3) of the workstation.

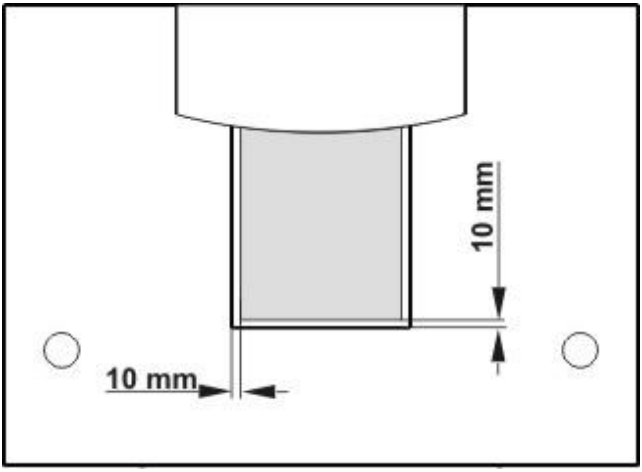

Make sure to keep about 10 mm distance between the stone top and the sides of the weighing table.

4. Install the monitor stand (4)
5. Install the liquid container inside the right locker (the container has to be installed in a holder inside the locker). Connect the flexible wires to the container.

Now you can equip your workstation with user electronic components.

Connect the user workstation components, refer to the schematic diagram and to the equipment and cables descriptions.

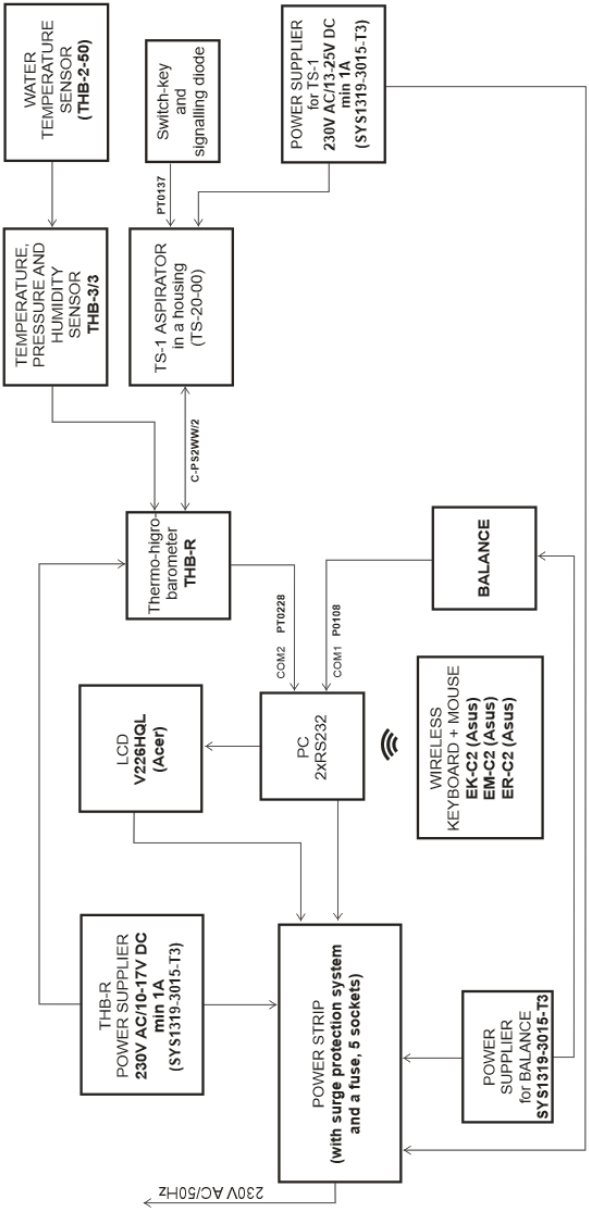

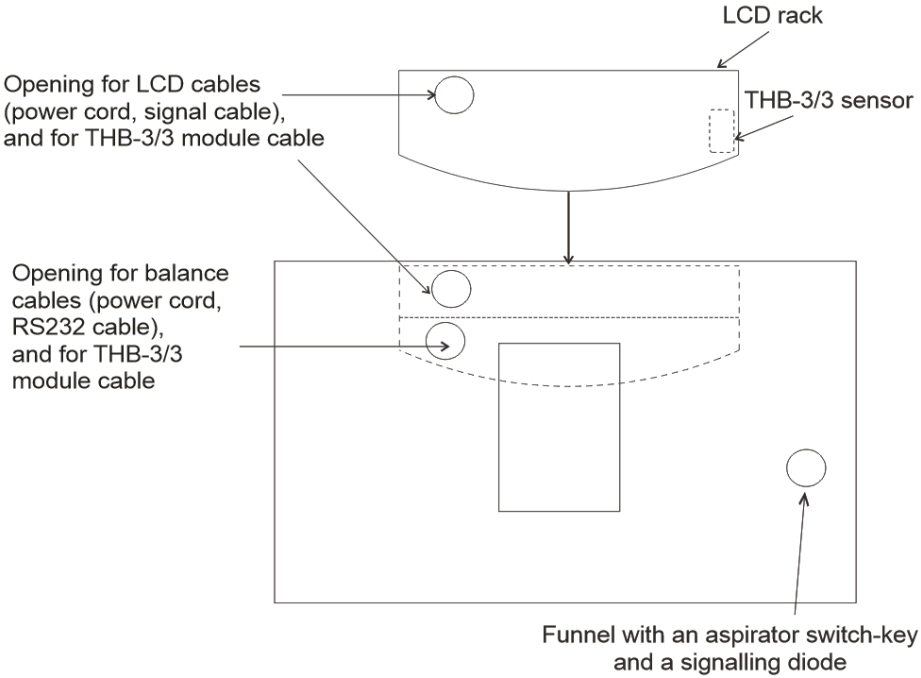

Cables Arrangement

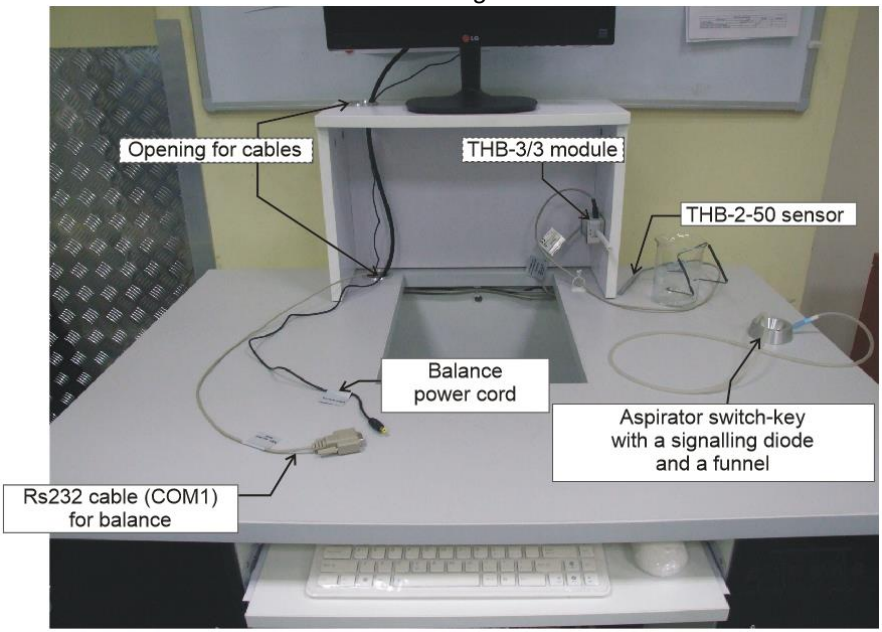

The schematic of user equipment at the workstation

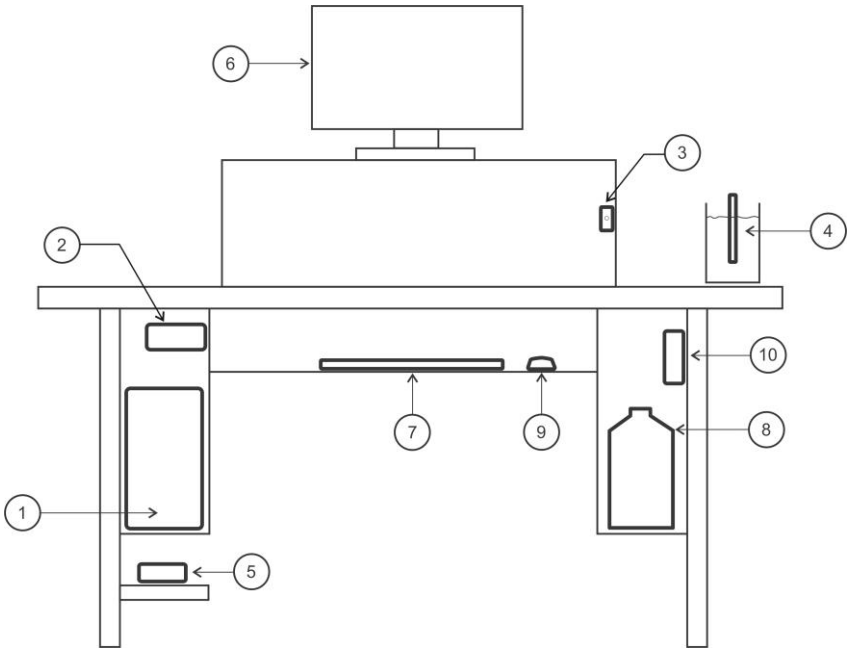

1.	PC computer
2.	THB-R ambient conditions recorder
3.	THB-3/3 thermo-hygro-barometer
4.	THB-2-50 sensor
5.	Power strip
6.	LCD
7.	Keyboard
8.	Liquid container
9.	Wireless mouse
10.	Liquid aspirator

WORKSTATION PERSPECTIVE VIEW:

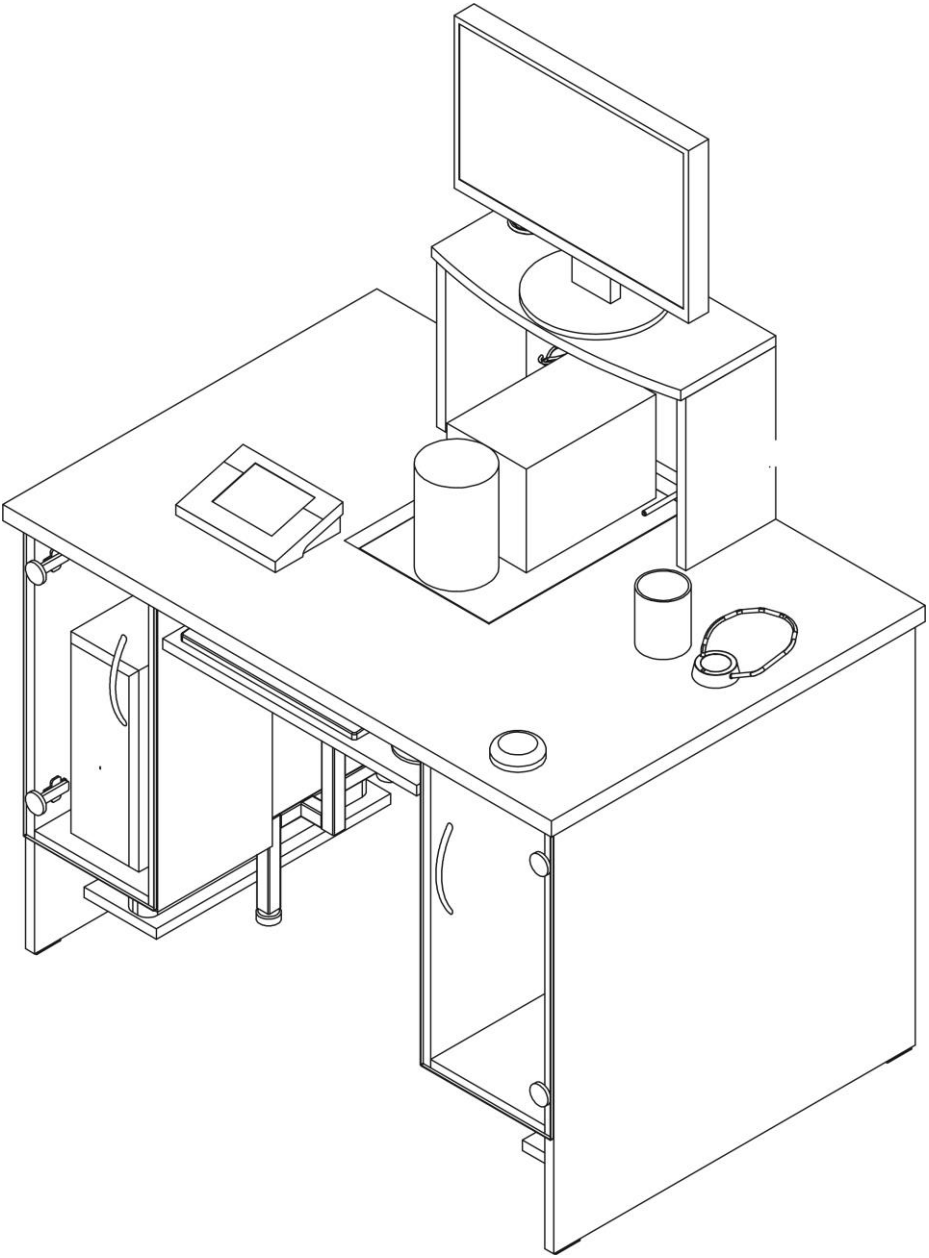

5. PSW/DUAL TABLE ASSEMBLY

5.1. Workstation Assembly

CAUTION: Be extremely careful when assembling the workstation since some components, e.g. stone top, are heavy and may pose a hazard.

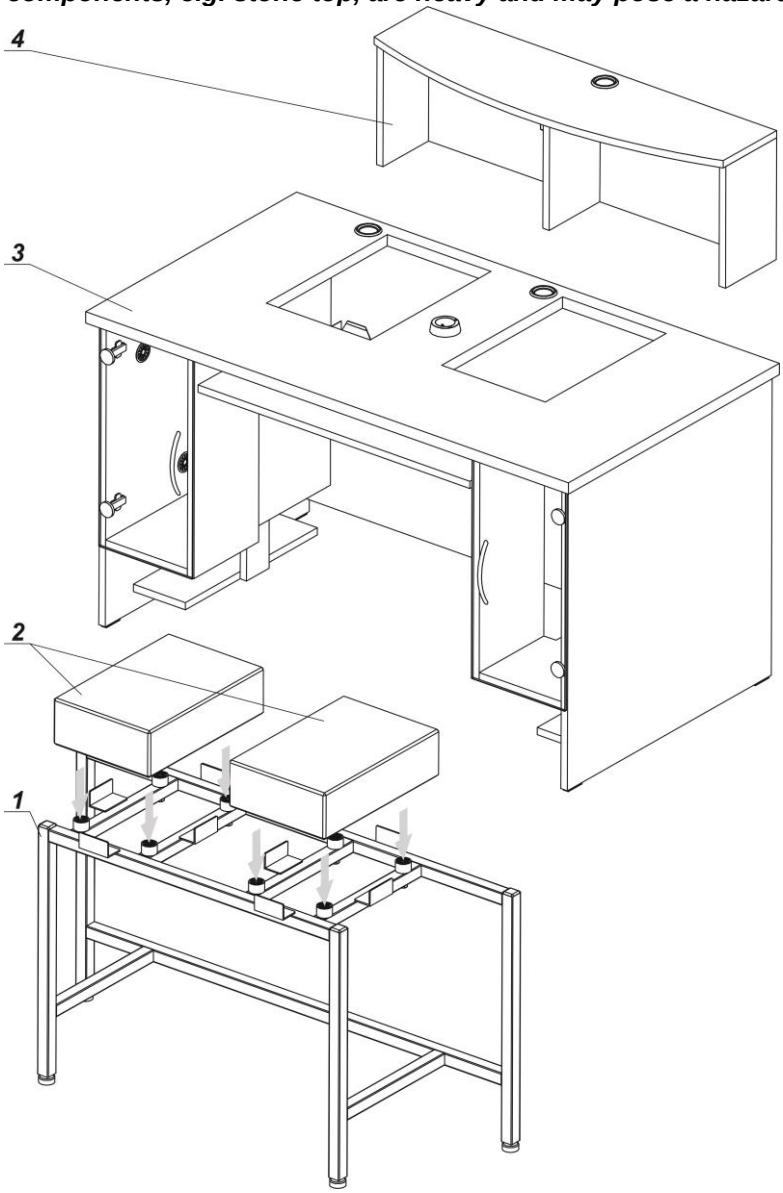

Procedure:

1. Place the internal frame (1) on its target spot.
2. Place the stone tops (2) onto shock absorbers. Mind that the tops cannot touch side stops.
3. Install the external design (3) of the workstation.

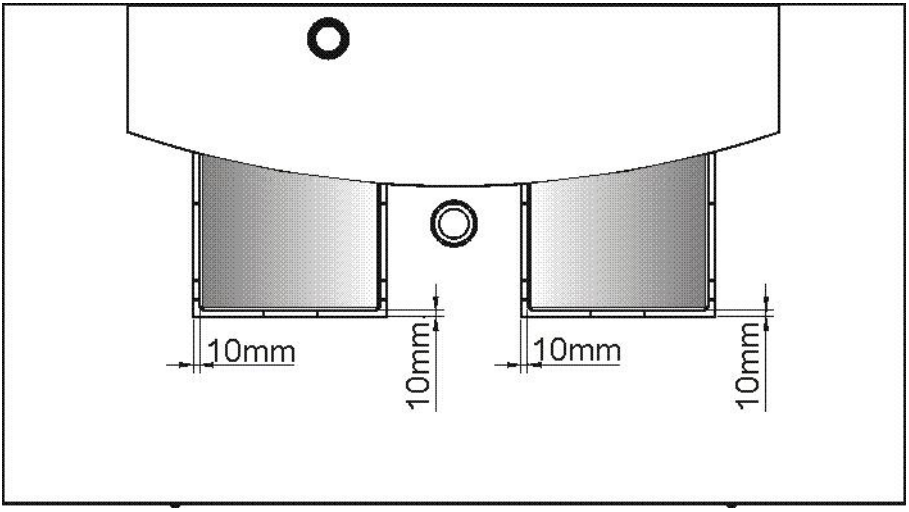

Make sure to keep about 10 mm distance between the stone top and the sides of the weighing table.

4. Install the monitor stand (4)
5. Install the liquid container inside the left locker (the container has to be installed in a holder inside the locker). Connect the flexible wires to the container.

Now you can equip your workstation with user electronic components.

Connect the user workstation components, refer to the schematic diagram and to the equipment and cables descriptions.

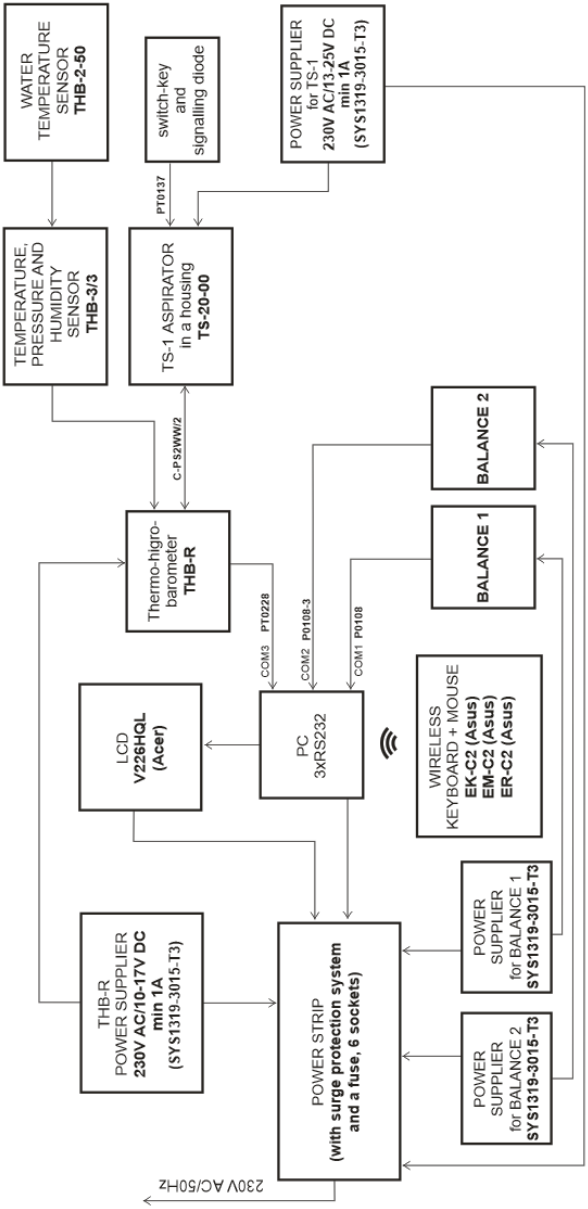

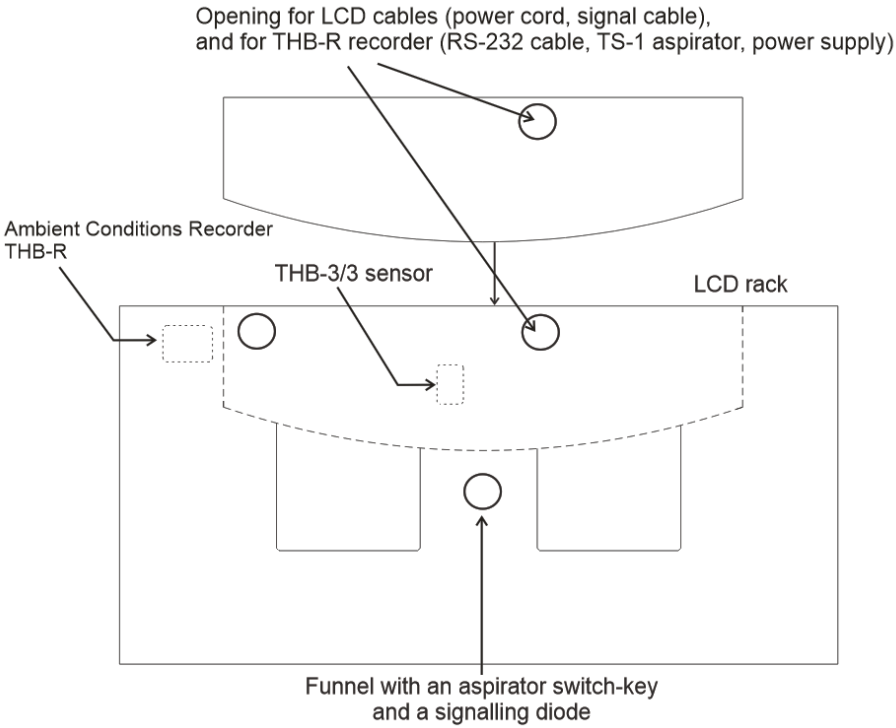

Cables Arrangement

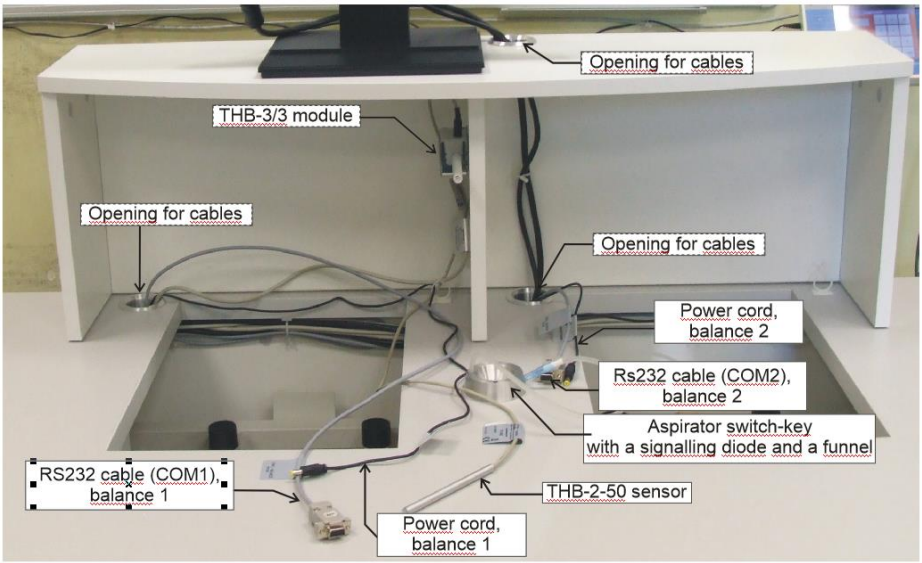

The schematic of user equipment at the workstation.

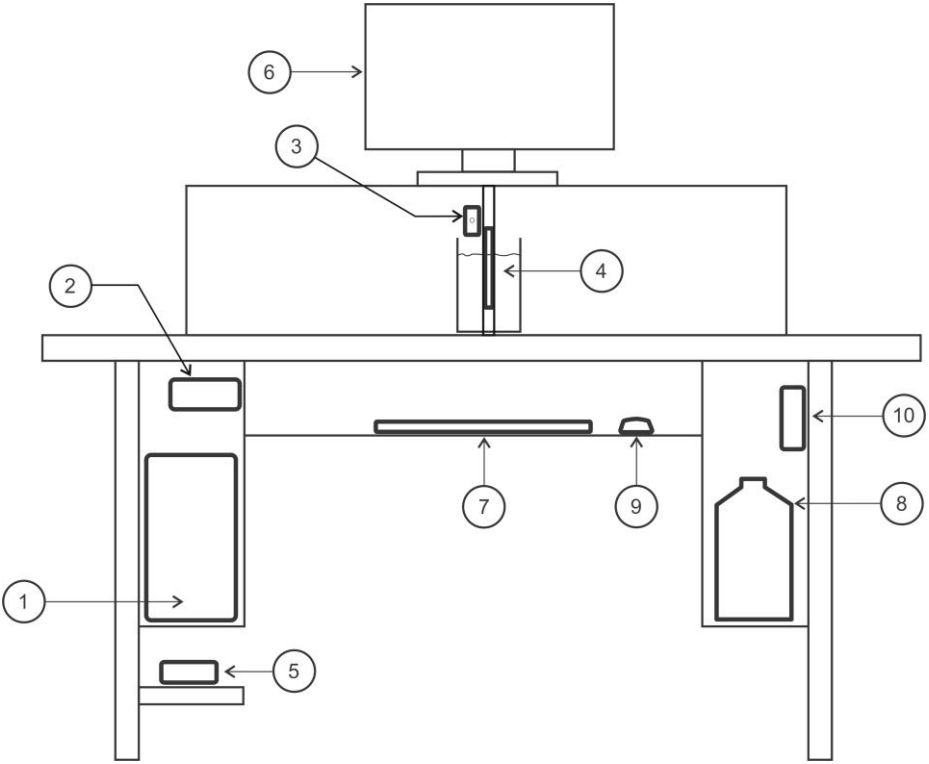

1.	PC computer
2.	THB-R ambient conditions recorder
3.	THB-3/3 thermo-hygro-barometer
4.	THB-2-50 sensor
5.	Power strip
6.	LCD
7.	Keyboard
8.	Liquid container
9.	Wireless mouse
10.	Liquid aspirator

WORKSTATION PERSPECTIVE VIEW:

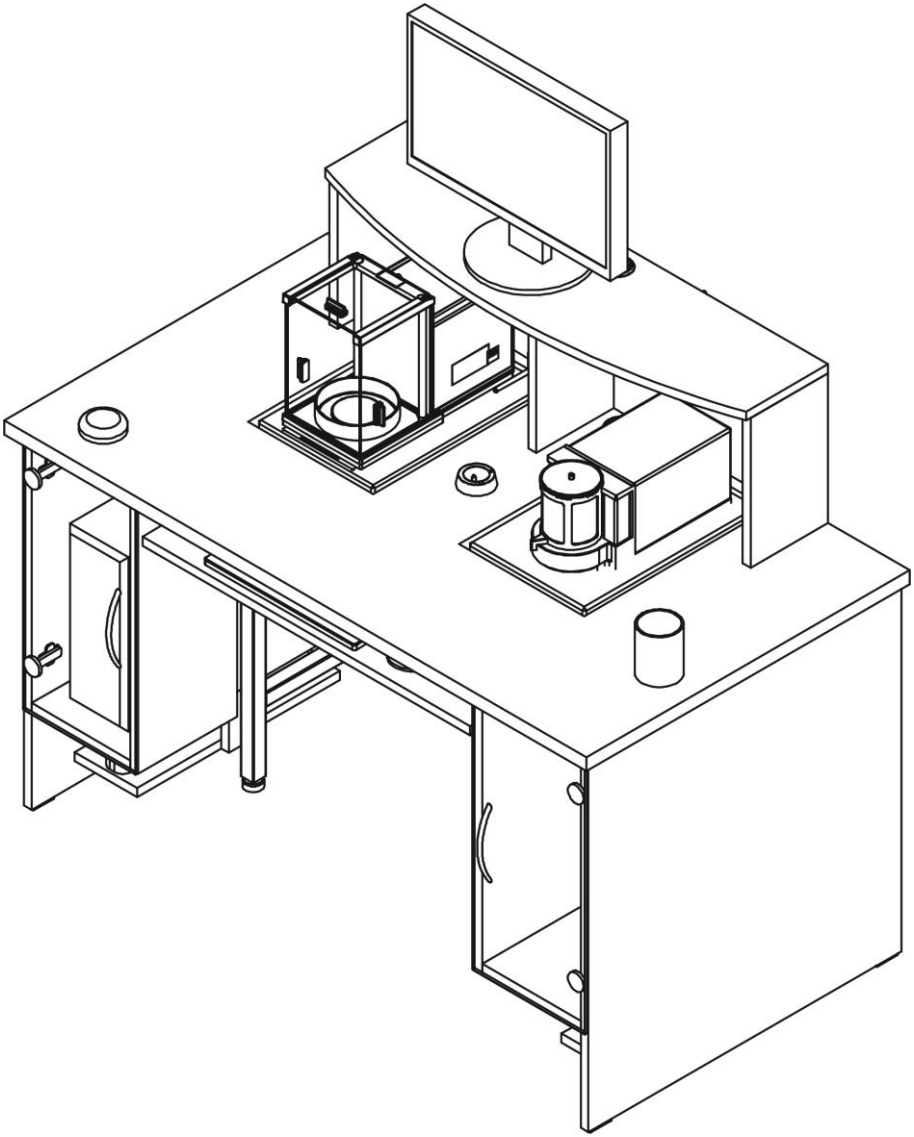

6. MAINTENANCE

Prior to cleaning, disassembly the balance and the monitor.

Cleaning chipboard components

Clean the table using slightly wet microfiber cloth with soap or dishwashing liquid, avoid using abrasive substances.
Use clean, dry cloth to make the surface shine.

Cleaning granite top

Clean the granite top using slightly wet microfiber cloth with mild dishwashing liquid or neutral PH cleaner intended for granite. Avoid using abrasive substances. Do not use cleansers containing abrasive substances.
Clean the top rubbing it gently from side to side. Do not use circular movements! Avoid using wire brushes and alike tools.
Use clean, dry cloth to make the surface shine.

Cleaning stainless steel components

Avoid using cleansers containing any corrosive chemicals, e.g. bleach (including chlorine). Do not use cleansers containing abrasive substances. Always remove the dirt using microfiber cloth to avoid damage of protective coating. Take special precautions, e.g. wear protective clothing.
Daily cleaning routine (removal of small stains):

1. Remove the dirt using cloth dipped in warm water.
2. For best results, add a little bit of dishwashing detergent.

Cleaning anti-draft chamber panes

Select dissolvent depending on a dirt. Never soak the glass panes in alkaline solutions since they interact with glass and may cause damage. Do not use cleansers containing abrasive substances.
For organic dirt use acetone first, next use water or detergent. For other than organic dirt use diluted acid solutions (soluble salts of hydrochloric or nitric acid) or base solutions (ammonium or sodium base).
To remove ACIDS use protophilic solvent (sodium carbonate), to remove BASE use protogenic solvent (mineral acid of various concentration).
In case of heavy contamination use brush and detergent, nevertheless avoid detergents containing large and hard molecules which could potentially scratch glass panes.
At the end of the cleaning process rinse the pane using distilled water.
Use soft brush with wooden or plastic handle exclusively to avoid risk of scratches. Do not use wire brush.
Rinsing is a necessary cleaning process stage allowing to remove remaining soap, detergents and other cleansers from the panes prior to their reinstallation.

After the preliminary cleaning process stage, rinse the pane using running water first, distilled next.
Avoid drying the panes either using paper towel or forced air circulation since some fibres, grains or contamination of other type could permeate into the panes thus causing weighing errors.
We do not recommend using driers when drying measuring glass tools.
It is a frequent treatment to leave glass components on a rack to dry.

Cleaning powder-coated components

For preliminary cleaning process stage you need running water or wet sponge featuring large pores, this will help you to remove loose, heavy dirt.
Do not use cleansers containing abrasive substances.
Next, using cloth and cleanser-water solution (soap, dishwashing liquid) gently rub the cleaned surface.
Avoid using cleanser without water since it may result with damage of the cleaned surface, please mind that large amount of water mixed with cleanser is a must.

Cleaning aluminium components

While cleaning aluminium components use products acid by nature, e.g. spirit vinegar, lemon. Do not use cleansers containing abrasive substances. Avoid using hard brush, this may cause scratches. It is recommended to use microfibre cloth.
While polishing the surface use circular movements. Use clean, dry cloth to make the surface shine.