USER GUIDE

ORIGO10

Vaisala · Authorized Partner

Distributed by AKRIBIS

M213293EN-B

User Guide

Transmitters for HVAC applications

Origo10

VAISALA

AKRIBIS · www.akribis.info · contacto@akribis.info

PUBLISHED BY

Vaisala Oyj
Vanha Nurmijärventie 21, FI-01670 Vantaa, Finland
P.O. Box 26, FI-00421 Helsinki, Finland
+358 9 8949 1
vaisala.com
docs.vaisala.com

© Vaisala 2026

No part of this document may be reproduced, published, or publicly displayed in any form or by any means, electronic or mechanical (including photocopying), nor may its contents be modified, translated, adapted, sold, or disclosed to a third party without prior written permission of the copyright holder. Translated document and translated portions of the document are based on the original English version. Parts of the translation may have been created using machine-assisted translation. In ambiguous cases, the English version is applicable, not the translation.

The contents of this document are subject to change without prior notice.

Local rules and regulations applicable to the products and services may vary, and they shall take precedence over the information contained in this document. Vaisala makes no representations on this document's compliance with the local rules and regulations applicable at any given time, and hereby disclaims any and all responsibilities related thereto. You are instructed to confirm the applicability of the local rules and regulations and their effect on the intended use of the products and services.

This document does not create any legally binding obligations for Vaisala towards customers or end users. All legally binding obligations are set forth exclusively in the applicable contract or in the relevant set of General Conditions of Vaisala (vaisala.com/policies).

This product contains software developed by Vaisala or third parties. Use of the software is governed by license terms and conditions included in the applicable contract or, in the absence of separate license terms and conditions, by the General License Conditions of Vaisala Group.

This product may contain open-source software (OSS) components. In the event this product contains OSS components, then such OSS is governed by the terms and conditions of the applicable OSS licenses, and you are bound by the terms and conditions of such licenses in connection with your use and distribution of the OSS in this product. Applicable OSS licenses are included in the product itself or provided to you on any other applicable media, depending on each individual product and the product items delivered to you.

Table of contents

1. About this document ... 11
1.1 Version information ... 11
1.2 Related manuals ... 11
1.3 Documentation conventions ... 11
1.4 Trademarks ... 12

2. Product overview ... 13
2.1 Introduction to Origo10 transmitters ... 13
2.1.1 Origo10 basic features and options ... 13
2.1.2 Examples of Origo10 transmitter selection ... 14
2.1.3 Configuration code key ... 15
2.2 Transmitter parts - duct model ... 16
2.3 Transmitter parts - wall model ... 18
2.3.1 Transmitter parts - wall model with probes and modules ... 20
2.4 Measurement options ... 21
2.4.1 Constant output probe ... 24
2.5 Output and input options ... 24
2.5.1 Analog outputs ... 24
2.5.2 Modbus RTU ... 25
2.5.3 BACnet MS/TP ... 25
2.5.4 Relay output ... 25
2.5.5 Binary input ... 26
2.6 Transmitter component boards ... 26
2.6.1 Origo10A component board ... 27
2.6.2 Origo10L component board ... 28
2.6.3 Mode button ... 29
2.7 Transmitter display ... 30
2.7.1 Device icons ... 31
2.7.2 Abbreviations of parameters ... 32
2.7.3 Status icons ... 33
2.8 LED indicator ... 33
2.9 Service port ... 34
2.10 Safety ... 34
2.10.1 ESD protection ... 36

3. Installation ... 38
3.1 Installation tools and safety ... 38
3.2 Selecting location ... 39
3.3 Installation overview ... 41
3.3.1 Installation overview for duct-mounted transmitters ... 41
3.3.2 Installation overview for wall-mounted transmitters ... 41
3.4 Opening transmitter cover ... 42
3.5 Opening display panel ... 43

3.6 Cable routing options....44
3.6.1 Wiring through bottom lead-through.... 45
3.6.2 Wiring from the back....46
3.6.3 Verifying tightness of cable glands....48
3.6.4 M12 connector pin-out for Modbus/BACnet connectivity.... 48
3.7 Duct model installation....48
3.8 Wall model installation.... 51
3.8.1 Mounting with adapter plate....53
3.8.2 Mounting with DIN rail adapter....54
3.8.3 Mounting with magnetic bracket.... 56
3.8.4 Connecting probes to transmitter.... 57
3.9 Wiring Origo10L devices.... 61
3.10 Wiring Origo10A devices....64
3.10.1 Wiring devices with 3-wire analog outputs....65
3.10.2 Wiring devices with Modbus/BACnet outputs.... 66
3.10.3 Wiring DIO10 relay output module.... 68
3.11 Wiring TMM10 temperature measurement module....71

4. Using transmitter with Insight PC software....75
4.1 Vaisala Insight PC software....75
4.2 Insight PC software overview.... 76
4.2.1 Insight software user modes.... 77
4.3 Connecting to Insight PC software.... 77
4.4 Setting transmitter passcode.... 78
4.5 Unlocking configuration with transmitter passcode....80
4.6 Removing transmitter passcode....81

5. Configuring Modbus and BACnet communication.... 82
5.1 Modbus and BACnet overview.... 82
5.2 Configuring Modbus with Insight.... 82
5.3 Configuring BACnet with Insight.... 83

6. Configuring analog outputs....85
6.1 Analog output configuration overview....85
6.2 Analog output configuration example....86
6.3 Analog output overrange behavior.... 87
6.3.1 Analog output overrange example.... 87

7. Configuring relays.... 88
7.1 Relay configuration overview....88
7.2 Relay activation options.... 89
7.3 Relay hysteresis.... 90
7.4 Relay activation and hysteresis examples....91
7.5 Setting relay activation limit without hysteresis.... 92
7.6 Setting relay activation limit using hysteresis.... 93

8. Configuring binary inputs 95
8.1 Binary input configuration overview 95
8.2 Configuring binary input for transmitter display 95
8.3 Configuring binary input as relay input 96

9. Calibration and adjustment 97
9.1 Calibration and adjustment overview 97
9.2 Calibration and adjustment with Insight PC software 98
9.2.1 Relative humidity probe adjustment example 99
9.2.2 Analog output adjustment 100

10. Maintenance and troubleshooting 105
10.1 Cleaning 105
10.2 Restarting transmitter 106
10.2.1 Restarting transmitter (with display) 106
10.2.2 Restarting transmitter (no display) 106
10.3 Restoring factory settings 107
10.3.1 Restoring factory settings (with display) 107
10.3.2 Restoring factory settings (no display) 108
10.4 Updating firmware 109
10.4.1 Updating firmware version with Insight PC software 109
10.4.2 Updating firmware version with file manager 109
10.5 Replacing modules 110
10.6 Display messages 112
10.7 Troubleshooting checklist 114
10.7.1 Diagnostics package from Insight 114
10.8 Troubleshooting 114

11. Technical data 116
11.1 Specifications 116
11.2 Dimensions 119
11.3 Spare parts and accessories 120

12. Vaisala services 123
12.1 Service centers 123
12.2 Technical support 123
12.3 Warranty 123

Appendix A: Modbus reference 125
A.1 Default communication settings 125
A.2 Function codes 125
A.3 Data encoding 125
A.3.1 32-bit floating point or 32-bit integer format 126
A.3.2 16-bit integer format 126

A.4 Modbus registers....127
A.4.1 Measurement data registers....127
A.4.2 Configuration registers....131
A.4.3 Status registers....132
A.4.4 Test value registers....134
A.5 Device identification objects....135
A.6 Exception responses....136
A.7 Modbus communication examples....137

Appendix B: BACnet reference....139
B.1 BACnet implementation....139
B.1.1 Configuration....139
B.1.2 Physical interface....140
B.1.3 Protocol services....140
B.1.4 Data persistence....140
B.1.5 Additions to BACnet Standard....141
B.2 BACnet Protocol Implementation Conformance Statement....141
B.3 BACnet objects....144
B.3.1 BACnet object instance numbers....144
B.3.2 BACnet object properties....145
B.3.3 Device object....147
B.3.4 Network port object....149
B.3.5 Analog input object....151
B.3.6 Binary input object....152
B.3.7 Binary output object....152
B.3.8 Structured view....153
B.4 BIBBs Supported....154
B.5 Application Services Supported....155

Appendix C: Regulatory statements....158
C.1 Origo10 manufacturer contact information....158
C.2 Korean conformity information....158
C.3 FCC Part 15 compliance statement....158
C.4 Canada ICES-3 / NMB-3 compliance statement....159
C.5 China RoHS information table....159

Appendix D: Recycling instructions....161

Index....163

Open-source software (OSS)....165

Online store....165

List of figures

Figure 1 Device configuration code.... 15
Figure 2 Device configuration code in Origo10 configurator.... 15
Figure 3 Origo10 duct model parts.... 16
Figure 4 Origo10 wall model parts.... 18
Figure 5 Origo10 wall model parts, with supported probes and modules.... 20
Figure 6 Origo10A component board.... 27
Figure 7 Origo10L component board.... 28
Figure 8 Mode button location and example of display view.... 29
Figure 9 Display layout.... 30
Figure 10 Selecting location for duct-mounted transmitter.... 40
Figure 11 Opening transmitter cover.... 43
Figure 12 Opening and closing display panel.... 44
Figure 13 Wiring through bottom lead-through.... 45
Figure 14 Wiring from the back.... 47
Figure 15 Attaching probe to duct-mounted transmitter.... 49
Figure 16 Duct fastening flange with installation hole drilling dimensions.... 49
Figure 17 Installing transmitter to duct.... 50
Figure 18 Mounting to wall.... 52
Figure 19 Mounting with adapter plate, wiring from the back.... 53
Figure 20 Adapter plate mounting dimensions.... 54
Figure 21 Mounting with DIN rail adapter.... 55
Figure 22 Attaching magnetic bracket to transmitter.... 57
Figure 23 Connecting probes to Origo10 transmitter.... 58
Figure 24 Connecting probes with splitter cable.... 60
Figure 25 Origo10L component board.... 61
Figure 26 Origo10L maximum loop resistance and supply voltage operating region.... 62
Figure 27 Origo10L wiring example, analog outputs with two power supplies.... 63
Figure 28 Origo10L wiring example, analog outputs with single power supply.... 63
Figure 29 Origo10A component board.... 64
Figure 30 Origo10A wiring example, analog (mA or V) outputs.... 66
Figure 31 Origo10A wiring with Modbus/BACnet outputs.... 67
Figure 32 Several transmitters on same RS-485 line.... 68
Figure 33 DIO10 relay output module component board.... 69
Figure 34 Installing and wiring DIO10 relay output module, example.... 70
Figure 35 TMM10 temperature measurement module component board.... 72
Figure 36 Installing and wiring TMM10 temperature measurement module, example.... 73
Figure 37 Insight PC software main menu view with one Origo10, one connected probe and two connected modules.... 76
Figure 38 Connecting Origo10 transmitter to Insight PC software.... 78
Figure 39 Modbus RTU default settings in Insight.... 82
Figure 40 BACnet default settings in Insight.... 83

Figure 41 Analog output configuration options example in Insight.....85
Figure 42 Analog output type (current or voltage) selection in Insight..... 86
Figure 43 Analog output overrange behavior example..... 87
Figure 44 Relay configuration options (CO_2 probe example) in Insight..... 88
Figure 45 Behavior of relay that activates above limit, with hysteresis..... 90
Figure 46 Relay activation and hysteresis examples..... 91
Figure 47 Relay activation and deactivation delay example..... 92
Figure 48 Relay settings example: one setpoint without hysteresis..... 92
Figure 49 Relay settings example: one setpoint with hysteresis.....93
Figure 50 Binary input configuration options in Insight..... 95
Figure 51 Insight Calibrate menu selection, humidity and temperature probe example.....98
Figure 52 Insight Restore factory adjustment selection.....99
Figure 53 Insight calibration menu main view (humidity and temperature probe)..... 99
Figure 54 Insight analog output adjustment view..... 100
Figure 55 Insight Diagnostics view example with analog output test options.....103
Figure 56 Cleaning side grooves on transmitter base..... 105
Figure 57 Replacing a module, DIO10 relay output module shown as an example.....111
Figure 58 Origo10 dimensions, wall mount.....119
Figure 59 Origo10 dimensions, duct mount..... 120
Figure 60 Materials for recycling.....161

List of tables

Table 1 Document versions (English) 11
Table 2 Related manuals 11
Table 3 Measurement options 21
Table 4 Device icons on transmitter display 31
Table 5 Examples of measurement views on transmitter display 31
Table 6 Parameter abbreviations on transmitter display 32
Table 7 Status icons on transmitter display 33
Table 8 LED statuses 33
Table 9 Installation overview for duct-mounted transmitters 41
Table 10 Installation overview for wall-mounted transmitters 42
Table 11 M12 connector pin-out for Origo10A Modbus/BACnet connectivity 48
Table 12 Analog output and grounding terminals of Origo10L devices 62
Table 13 Analog output terminals of Origo10A devices 65
Table 14 Power supply input and grounding terminals of Origo10A devices 65
Table 15 Modbus and BACnet terminals of Origo10A devices 66
Table 16 Power supply input and grounding terminals of Origo10A devices 67
Table 17 Relay output and binary input terminals 69
Table 18 Transmitter analog channel fixed test output levels 101
Table 19 Suitable cleaning agents 105
Table 20 Transmitter messages shown on display 112
Table 21 Origo10-compatible devices 116
Table 22 Origo10 operating environment 116
Table 23 Powering, Origo10L 117
Table 24 Powering, Origo10A 117
Table 25 Origo10 digital communication 117
Table 26 Origo10 analog outputs 117
Table 27 Origo10 relay output / binary input 118
Table 28 Origo10 compliance 118
Table 29 Origo10 mechanical specifications 118
Table 30 Origo10 spare parts 120
Table 31 Origo10 accessories 121
Table 32 Probe connection cables 121
Table 33 Selected probe-specific accessories 121
Table 34 Default Modbus serial communication settings 125
Table 35 Modbus function codes 125
Table 36 Interpretation of 16-bit signed integer values 126
Table 37 Probe and module status and information data registers (read-only) 127
Table 38 Probe and module metric measurement data registers (read-only) 128
Table 39 Probe and module non-metric measurement data registers (read-only) 129
Table 40 Probe and module measurement status data registers (read-only) 130

Table 41 Probe and module metric integer measurement data registers (read-only)..... 130
Table 42 Modbus configuration data registers (writable).....131
Table 43 Transmitter status and information data registers (read-only).....132
Table 44 Error codes in register 0xC000.....133
Table 45 Error codes in register 0xC002.....134
Table 46 Modbus test registers (read-only).....134
Table 47 Device identification objects.....135
Table 48 Modbus exception responses.....136
Table 49 BACnet configuration options..... 139
Table 50 Protocol services implementation notes.....140
Table 51 Data persistence classes..... 141
Table 52 BACnetEngineeringUnits..... 141
Table 53 Instance numbers for BACnet objects.....144
Table 54 Analog input instance numbering..... 145
Table 55 Status flags.....145
Table 56 Reliability.....146
Table 57 Event state..... 146
Table 58 BACnet command priorities.....146
Table 59 Device object properties..... 147
Table 60 Network port object properties..... 149
Table 61 Analog input object properties..... 151
Table 62 Binary input object properties.....152
Table 63 Binary output object properties.....152
Table 64 Structured view properties.....153
Table 65 BIBBs Supported..... 154
Table 66 Application Services Supported.....155

1. About this document

1.1 Version information

This document provides instructions on installing, using and maintaining Vaisala Origo10 Transmitters.

Table 1 Document versions (English)

Document code	Date	Description
M213293EN-B	May 2026	Korean conformity information added to Specifications (page 116) and Korean conformity information (page 158).
M213293EN-A	April 2026	First version.

1.2 Related manuals

For the latest versions of these documents, see docs.vaisala.com.

Table 2 Related manuals

Document code	Name
M213292EN	Vaisala Origo10 Transmitters Quick Guide
M213279EN	Vaisala XMP10 Humidity and Temperature Probes User Guide
M211060EN	Vaisala HMP60 and HMP110 Series Humidity and Temperature Probes User Guide
M211799EN	Vaisala GMP251 and GMP80P Carbon Dioxide Probe User Guide
M211897EN	Vaisala GMP252 Carbon Dioxide Probe User Guide
M211435EN	Vaisala DMT143 Dew Point Transmitter User Guide

1.3 Documentation conventions

WARNING! Alerts you to a hazardous situation that, if not avoided, could result in death or serious injury.

CAUTION! Alerts you to a hazardous situation that, if not avoided, could result in minor or moderate injury.

NOTICE! Alerts you to a situation that, if not avoided, could result in the product to be damaged, or important data to be lost.

Highlights important information on using the product.

Lists the tools needed to perform the task.

1.4 Trademarks

Vaisala® and HUMICAP® are registered trademarks of Vaisala Oyj.

BACnet® is a registered trademark of ASHRAE.

Modbus® is a registered trademark of Schneider Automation Inc.

Google Chrome™ is a trademark of Google Inc.

All other product or company names that may be mentioned in this publication are trade names, trademarks, or registered trademarks of their respective owners.

2. Product overview

2.1 Introduction to Origo10 transmitters

Vaisala Origo10 Transmitter series comprises a versatile selection of HVAC transmitters with exceptionally high reliability and excellent long-term stability of measurement.

The Origo10 series includes humidity, temperature, carbon dioxide and dew point transmitters with easily interchangeable measurement probes. The selection contains duct and wall mounted transmitter models with cable options, as well as a multitude of installation accessories for various measurement locations.

Origo10 transmitters are available as two main models with several output options:

- **Origo10A** configuration for RH, T, CO_2, and T_d
  - 3 analog outputs (3-wire)
  - Modbus® RTU or BACnet® connectivity
  - Optional relay output
- **Origo10L** configuration for RH and T
  - 2 loop-powered analog outputs (2-wire)

The analog outputs are delivered preconfigured, so the transmitter is ready to transmit analog signals right after connecting a probe.

The transmitter settings can also be easily configured with the Vaisala Insight PC software any time.

2.1.1 Origo10 basic features and options

- Modular transmitters with interchangeable measurement probes
- Humidity, temperature, carbon dioxide, and dew point measurements as per connected probe
- Wall and duct mounting options
- Analog, Modbus® RTU, and BACnet® MS/TP output options
- Optional display with up to four parameters
- IP65-rated enclosure
- Compatible with Vaisala Insight PC software
- Cleanroom compatible

More information

- Specifications (page 116)
- Spare parts and accessories (page 120)

2.1.2 Examples of Origo10 transmitter selection

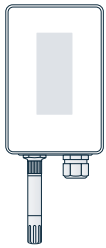

Origo10 wall mount with XMP10 probe (RH+T / T)

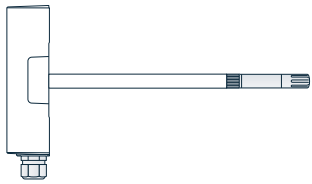

Origo10 duct mount with XMP10 probe (RH+T / T)

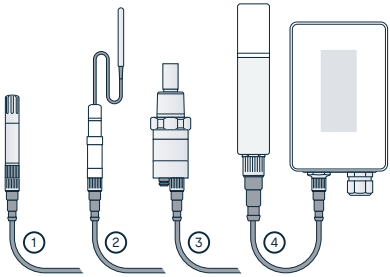

Origo10 wall mount with examples of cable-attached probes. **(1)** XMP10 (RH+T / T), **(2)** TMP115 (T), **(3)** DMT143 (T_d), **(4)** GMP252 (CO_2).

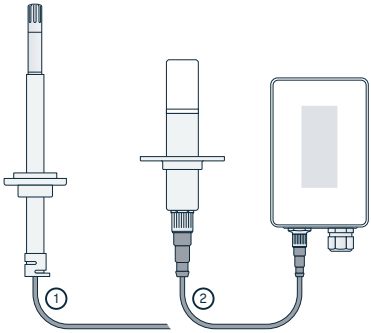

Origo10 wall mount with examples of cable-attached probes and duct installation accessory. **(1)** XMP10 (RH+T / T), **(2)** GMP252 (CO_2).

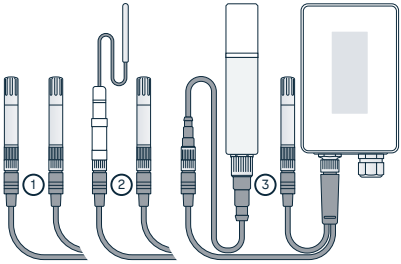

Origo10 wall mount with examples of the splitter cable option. Combination **(1)**: XMP10 + XMP10 (RH+T / T). Combination **(2)**: TMP115 (T) + XMP10. Combination **(3)**: GMP252 (CO_2) + XMP10.

More information

- Specifications (page 116)

- Spare parts and accessories (page 120)

2.1.3 Configuration code key

Each device has a unique code in the type label on top of the enclosure. Open the transmitter cover to view the code. You can also find the code on your device's package label.

The code includes one digit for each selection on the device order form.

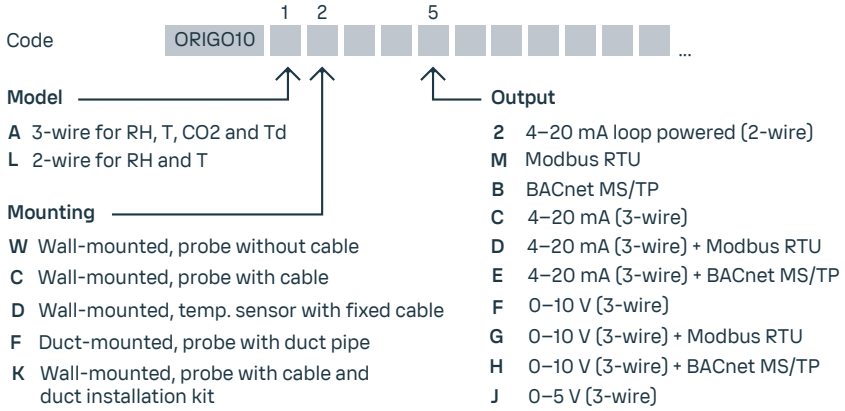

Figure 1 Device configuration code

To view your transmitter's configuration in more detail, copy-paste the code to the Origo10 configurator.

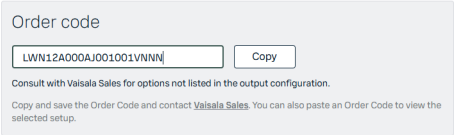

Figure 2 Device configuration code in Origo10 configurator

The complete device order form is available at docs.vaisala.com.

More information

- Opening transmitter cover (page 42)

2.2 Transmitter parts - duct model

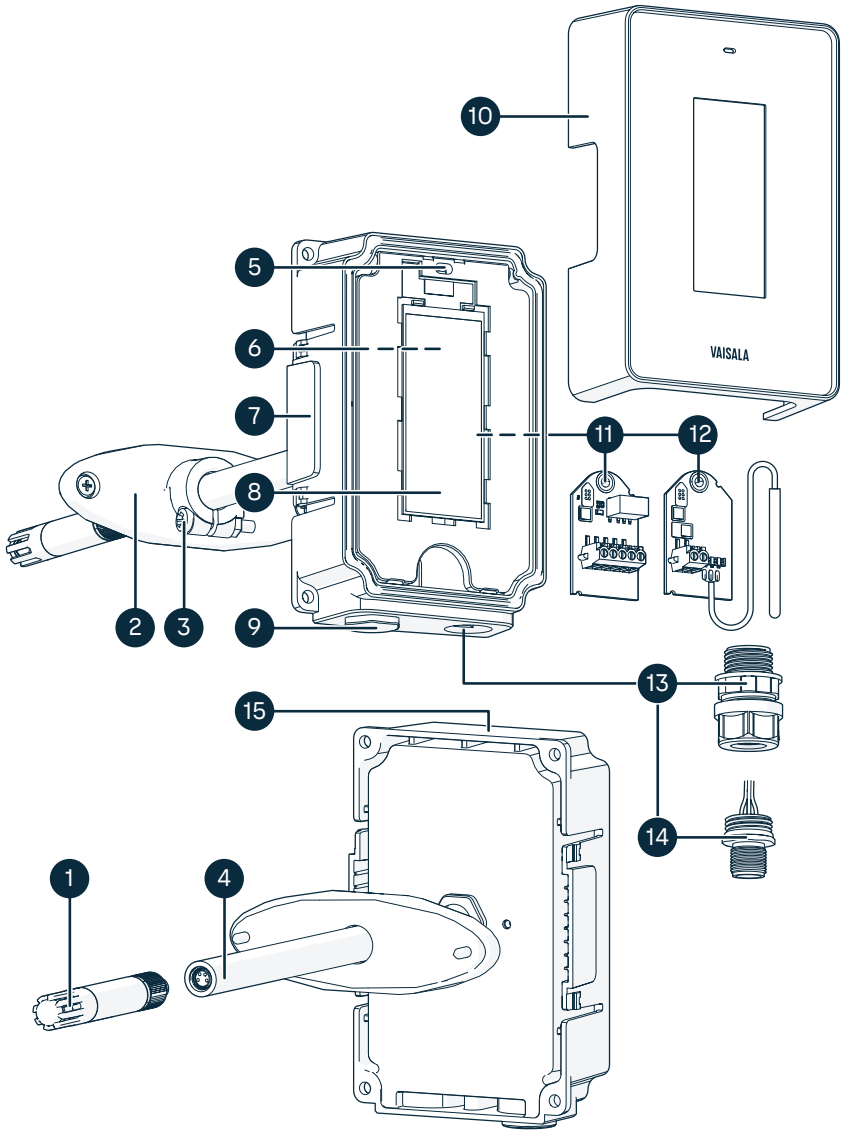

Figure 3 Origo10 duct model parts

1 XMP10 humidity and temperature probe
2 Fastening flange
3 Tightening screw for fastening flange
4 Duct pipe
5 LED indicator
6 Display panel. In transmitters with a display, the component board is under this panel.
7 Side tabs for opening the cover
8 Optional display
9 Cable lead-through. Plugged or used for TMM10 sensor cabling.
10 Transmitter cover
11 DIO10 relay output / binary input module (optionally available for Origo10A transmitters)
12 TMM10 temperature measurement module and sensor tip (optionally available for Origo10A and Origo10L transmitters)
13 Cable gland option (M16×1.5)
14 M12 connector option for transmitters ordered with Modbus RTU or BACnet connectivity
15 Type label and device configuration code on top of the enclosure

The display, optional modules (numbers 11-12) and cable lead-through options (numbers 13-14) are selected when ordering the transmitter.

To view your transmitter's configuration in more detail, copy-paste the code to the Origo10 configurator.

2.3 Transmitter parts - wall model

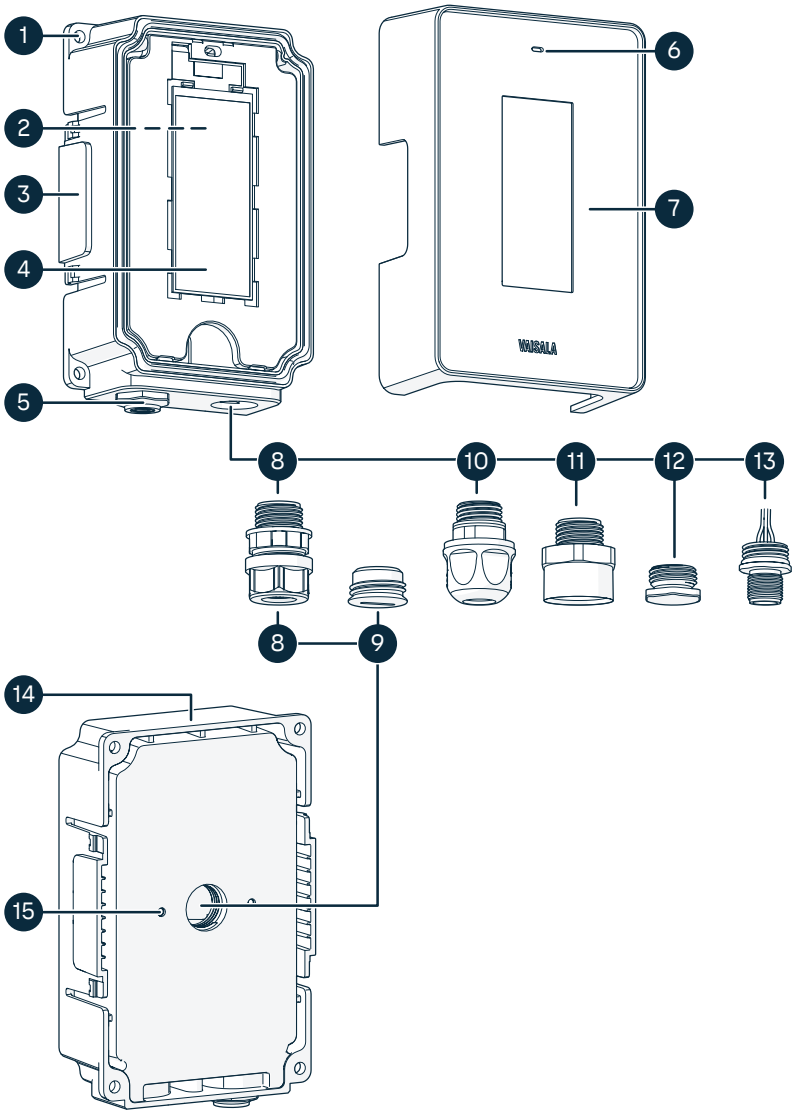

Figure 4 Origo10 wall model parts

1 Wall-mounting holes
2 Display panel. In transmitters with a display, the component board is under this panel.
3 Side tabs for opening the cover
4 Optional display
5 Probe connector (4-pin female M8). Alternatively, this lead-through can be used for TMM10 sensor cabling.
6 LED indicator
7 Transmitter cover
8 Cable gland option (M16×1.5)
9 Plug for closing the lead-through at the back, if not used
10 Hygienic cable gland option for cleanrooms (M16×1.5)
11 Conduit fitting option (NPT1/2″)
12 Plug for closing the lead-through at the bottom of the enclosure, if not used
13 M12 connector option for transmitters ordered with Modbus RTU or BACnet connectivity
14 Type label and device configuration code on top of the enclosure
15 DIN rail adapter mounting holes

The display, cable lead-through options (numbers 8-14), optional modules and probes are selected when ordering the transmitter. The module and probe options for the wall model are presented in Transmitter parts - wall model with probes and modules (page 20).

To view your transmitter's configuration in more detail, copy-paste the code to the Origo10 configurator.

2.3.1 Transmitter parts - wall model with probes and modules

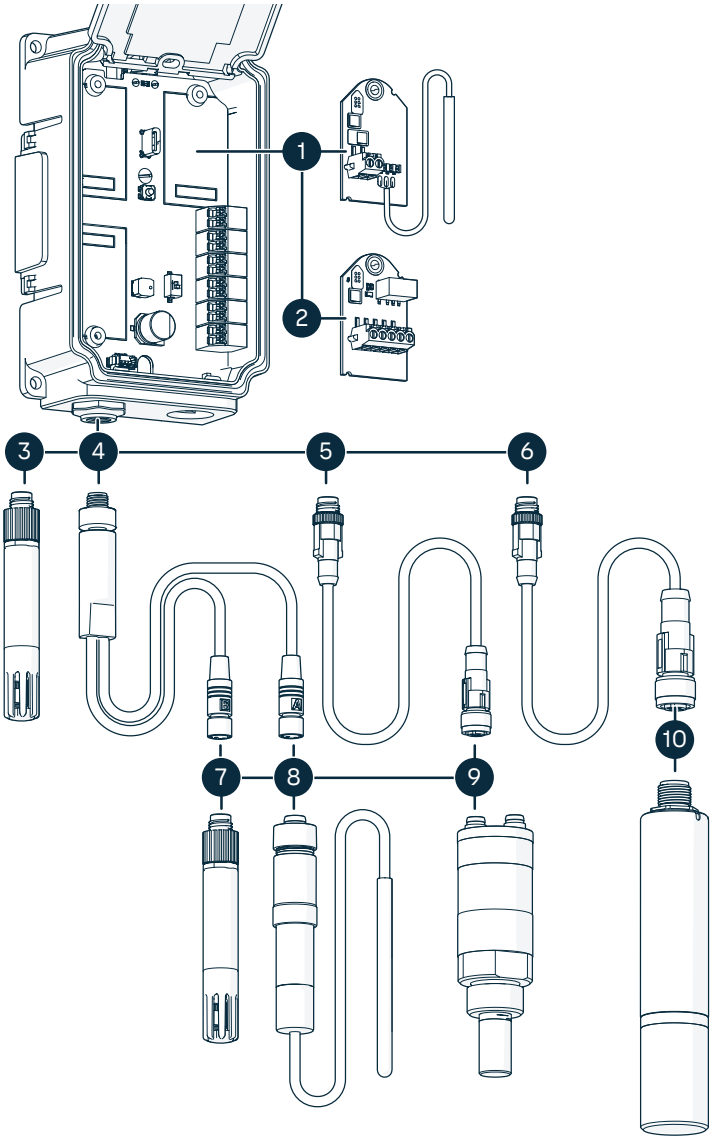

Figure 5 Origo10 wall model parts, with supported probes and modules

1 TMM10 temperature measurement module and sensor tip
2 DIO10 relay output / binary input module
3 XMP10 humidity and temperature probe
4 Splitter cable option (M8-M8/M8) for XMP10, HMP60-HMP110 series, TMP115 and GMP250 series.
5 Probe connection cable (M8-M8) for XMP10, HMP60-HMP110 series, TMP115 and DMT143
6 Probe connection cable (M8-M12) for GMP250 series probes
7 Example probe (XMP10) that can be connected to splitter cable
8 Example probe (TMP115) that can be connected to splitter cable
9 DMT143 transmitter
10 Example of GMP250 series probe

2.4 Measurement options

The following table gives an overview of the measurement devices (probes and modules) that can be used with Origo10 transmitters. The transmitter and devices connected to it can be configured using the Insight PC software.

> The probes used in the transmitter are fully interchangeable. All measurement-related calibration data is located and stored in the probe, and thus, only the probe needs to be calibrated. You can easily remove the probe and replace it with a new one without having to adjust the transmitter.

Table 3 Measurement options

Device	Description [1)]	Installation notes
XMP10	**Humidity and temperature** probe for measurement in demanding conditions as well as indoor environments. Robust stainless steel or plastic construction. Temperature-only version also available. Measurement temperature range −40 ... +60 °C (−40 ... +140 °F). Operating temperature range is −40 ... +80 °C (−40 ... +176 °F) or −40 ... +60 °C (−40 ... + 140 °F), depending on the sensor type.	Available for wall-mounted and duct-mounted transmitters with the Origo10A or Origo10L configuration. Connected to Origo10 directly or using an M8-M8 probe connection cable. Versatile mounting options using accessories.

Device	Description [1]	Installation notes
HMP60, HMP110, HMP110T and HMP110REF	**Humidity and temperature** probe for measurement in demanding conditions. Robust stainless steel construction. Temperature-only version HMP110T is also available. Measurement temperature range −40 ... +80 °C (−40 ... +176 °F).	Available for wall-mounted transmitters with the Origo10A or Origo10L configuration. Connected to Origo10 using an M8-M8 probe connection cable. Versatile mounting options using accessories.
HMP63 and HMP113	**Humidity and Temperature** probes for non-condensing indoor environments. Measurement temperature range −40 ... +60 °C (−40 ... +140 °F).	Available for wall-mounted transmitters with the Origo10A or Origo10L configuration. Connected to Origo10 using an M8-M8 probe connection cable. Versatile mounting options using accessories.
TMP115 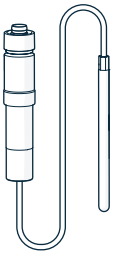	**Temperature** probe for measurement in a wide range of conditions. Suitable for measurement inside chambers, fridges, and freezers. Sensor tip withstands immersion in glycol and liquid nitrogen. Measurement temperature range −196 ... +150 °C (−320 ... +302 °F). Operating temperature range of the probe body is −40 ... +60 °C (−40 ... +140 °F).	Available as 50 cm (1 ft 7.7 in) and 3 m (9.8 ft) long versions. Length includes the probe body and sensor tip. Use the thermal dampener block accessory (item code 236310SP) to add thermal mass to the sensor tip. Available for wall-mounted transmitters with the Origo10A or Origo10L configuration. Connected to Origo10 using an M8-M8 probe connection cable.

Device	Description [1]	Installation notes
TMM10 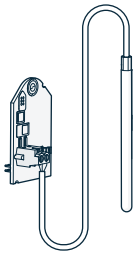	**Temperature** measurement module with a cable-connected sensor tip. Optimal for applications which require a wide temperature range, such as freezers and refrigerators. Measurement temperature range −45 ... +100 °C (−49 ... +212 °F).	Available for wall-mounted and duct-mounted transmitters with the Origo10A or Origo10L configuration. Consists of a module component board, 3 m (9.8 ft) cable and sensor tip. Install the module on the transmitter component board and route the cable through a cable gland.
GMP251 and GMP252 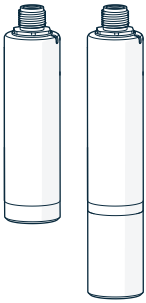	**Carbon dioxide** probes for %-level measurements (GMP251) and ppm-level measurements (GMP252). Designed for use in demanding applications such as life science incubators. Operating temperature range −40 ... +60 °C (−40 ... +140 °F).	Available for wall-mounted transmitters with the Origo10A configuration. Connected to Origo10 using an M8-M12 probe connection cable. Versatile mounting options using accessories.
DMT143 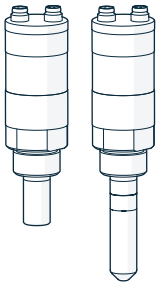	**Dew point** measurement instrument for applications that occasionally experience process water spikes. Measurement range −70 ... +60 °C (−94 ... +140 °F)	Available for wall-mounted transmitters with the Origo10A configuration. Connected to Origo10 using an M8-M8 probe connection cable.

1) *See device datasheets at docs.vaisala.com for detailed specifications.*

More information

- Connecting probes to transmitter (page 57)

- Wiring TMM10 temperature measurement module (page 71)
- Spare parts and accessories (page 120)

2.4.1 Constant output probe

The constant output probe HMP110REF is a testing accessory that can be used to check the transmitter's functions and measurement signal transfer chain all the way to the control system. The constant output probe does not measure; instead, it outputs constant humidity and temperature readings.

The values output by the constant output probe are specified when ordering. These values are written on an additional label on the probe body.

The procedure for using the constant output probe is simply to replace the original probe for the duration of the testing.

1. Disconnect the standard probe from the transmitter.
2. Connect the constant output probe to the transmitter.
3. Check that all used outputs (for example, analog, display, serial line) show the correct measurement values.
4. After checking the outputs, disconnect the constant output probe and reconnect the original probe.

2.5 Output and input options

2.5.1 Analog outputs

Depending on the ordered transmitter configuration, the transmitter provides either 3 or 2 scalable analog output channels:

- **Origo10A** (3-wire) configuration: 3 × 0–5 V, 0–10 V or 4–20 mA channels
- **Origo10L** (2-wire) configuration: 2 × 4–20 mA loop-powered channels

The analog outputs are delivered preconfigured, so the transmitter is ready to transmit analog signals right after connecting a probe.

You can use the Insight PC software to configure the output mode for the channels (same output mode in all channels), as well as the measurement parameter and scaling for each channel.

More information

- Wiring Origo10L devices (page 61)
- Wiring Origo10A devices (page 64)
- Analog output configuration overview (page 85)

2.5.2 Modbus RTU

Transmitters with the Origo10A configuration can be ordered with the Modbus RTU protocol output option.

The protocol type can later be changed to BACnet MS/TP via the Insight PC software, if needed.

Modbus RTU is not available in transmitters with the Origo10L configuration.

More information

- Wiring devices with Modbus/BACnet outputs (page 66)
- Configuring Modbus with Insight (page 82)

2.5.3 BACnet MS/TP

Transmitters with the Origo10A configuration can be ordered with the BACnet MS/TP protocol output option.

The protocol type can later be changed to Modbus RTU via the Insight PC software, if needed.

BACnet is not available in transmitters with the Origo10L configuration.

More information

- Wiring devices with Modbus/BACnet outputs (page 66)
- Configuring BACnet with Insight (page 83)

2.5.4 Relay output

Transmitters with the Origo10A configuration can be ordered with a configurable relay output module DIO10 installed on the transmitter component board. You can wire the relay either as normally closed or as normally open. Use the Insight PC software to configure the relay activation parameters.

A binary input is also available on the DIO10 module. The binary input can be used to receive a dry-contact signal to the transmitter.

The DIO10 module is not available in transmitters with the Origo10L configuration.

More information

- Wiring DIO10 relay output module (page 68)
- Relay configuration overview (page 88)

2.5.5 Binary input

The optional modules of the transmitter offer a binary input, which can be used to receive a dry-contact signal to the transmitter. The binary input is available on the DIO10 relay output module and the TMM10 temperature measurement module.

More information

- Wiring DIO10 relay output module (page 68)
- Wiring TMM10 temperature measurement module (page 71)
- Binary input configuration overview (page 95)

2.6 Transmitter component boards

Origo10 transmitters can have 2 types of component boards depending on the ordered transmitter configuration:

- **Origo10A**: Component board includes spring terminals for RS-485 (Modbus RTU or BACnet MS/TP) outputs and 3-wire analog outputs (current or voltage). See the device type label to identify the output type preconfigured for your transmitter.
- **Origo10L**: Component board includes spring terminals for 2-wire loop-powered analog outputs.

More information

- Origo10A component board (page 27)
- Origo10L component board (page 28)

2.6.1 Origo10A component board

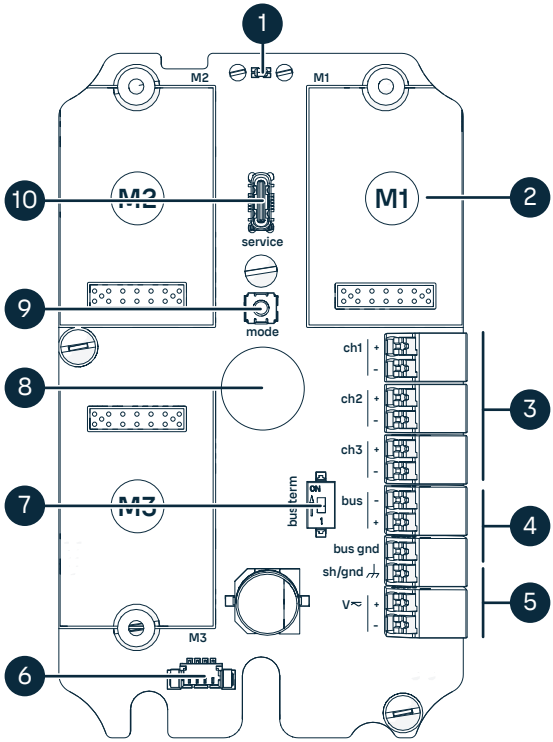

Figure 6 Origo10A component board

1 LED indicator
2 Module slots, labeled as M1...M3 on the component board. DIO10 relay output modules and TMM10 temperature measurement modules can be installed into these slots.
3 Analog output terminals
4 RS-485 output terminals (Modbus RTU or BACnet MS/TP)
5 Power supply input terminals
6 Probe terminal (wired at the factory)
7 RS-485 termination jumper
8 Cable lead-through for wiring from the back (in wall models)
9 Button for device information, restart and factory reset
10 Service port (USB-C)

2.6.2 Origo10L component board

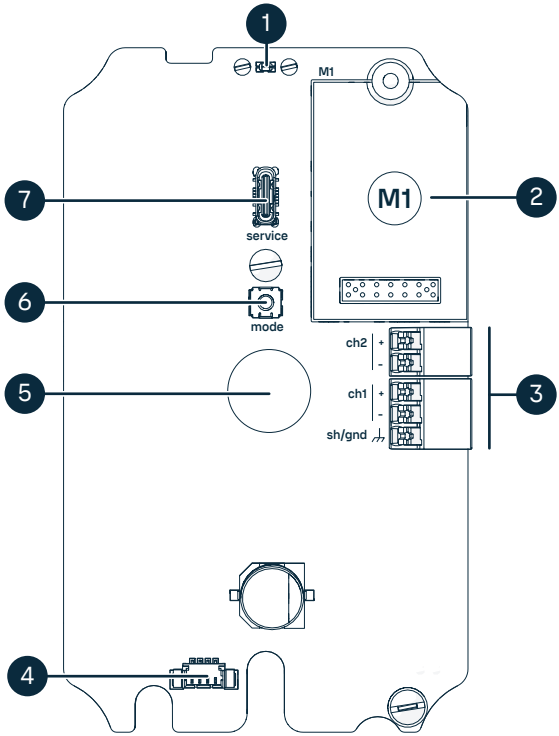

Figure 7 Origo10L component board

1 LED indicator
2 Module slot M1 for TMM10 temperature measurement module
3 Analog output terminals and grounding terminal. Channel 1 (ch1) powers up the Origo10L transmitter.
4 Probe terminal (wired at the factory)
5 Cable lead-through for wiring from the back (in wall models)
6 Button for device information, restart and factory reset
7 Service port (USB-C)

2.6.3 Mode button

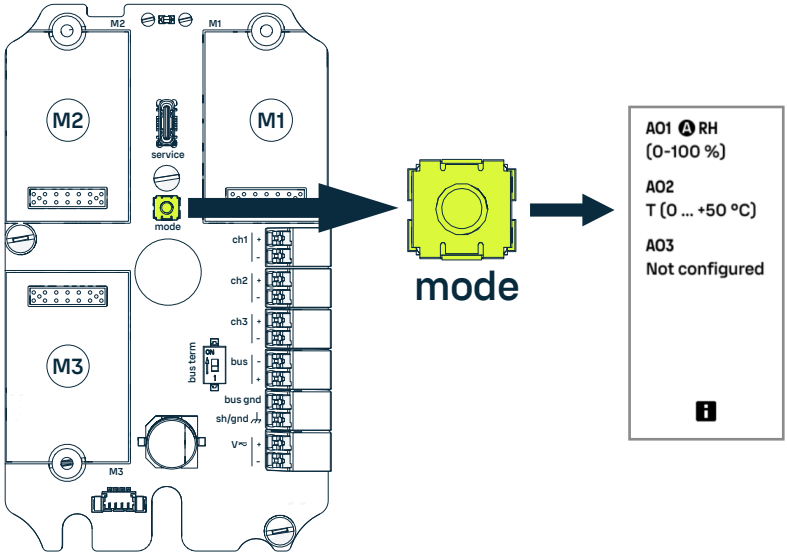

Figure 8 Mode button location and example of display view

The **mode** button is located on the transmitter component board. Using the button you can:

- Browse device information on the transmitter display. For example, device versions, communication settings and analog output/relay output configuration.
- Restart the transmitter
- Restore the factory default settings

Open the transmitter cover and display panel to access the button.

More information

- Opening transmitter cover (page 42)
- Opening display panel (page 43)
- Restarting transmitter (page 106)
- Restoring factory settings (page 107)

2.7 Transmitter display

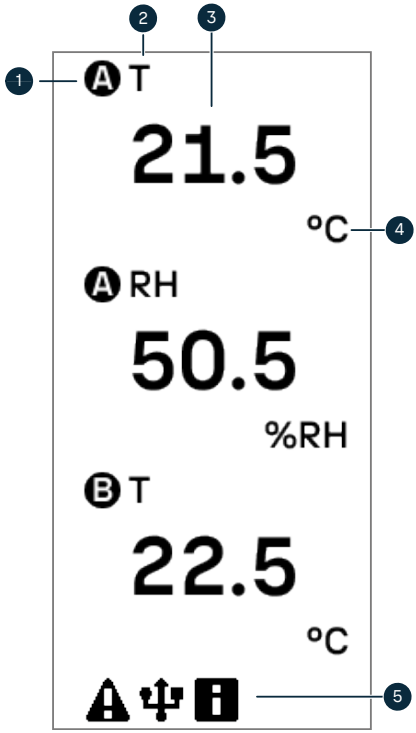

Figure 9 Display layout

1 Source icon for measurement or output/input device. Displayed if more than one device (probe or module) is connected to the transmitter.
2 Abbreviation of measurement parameter or output/input
3 Latest measured value or state of output/input
4 Unit of measurement
5 Status icons row

The transmitter display can show 1 to 4 measurement parameters or states of output/input from the connected devices.

The transmitter detects the connected devices automatically. If a device is disconnected from the transmitter, the values on the display will be replaced with dashes "---" until the device is reconnected and can be successfully read again. Note that if you replace the device with a different type of device, you need to reconfigure the display and output parameters for the new device in the Insight PC software.

Browsing device information on display

Using the **mode** button located on the transmitter component board, you can browse device information on the display. For example, device versions, communication settings and analog output/relay output configuration. Open the transmitter cover and display panel to access the button.

To view device information from a non-display version of the transmitter, connect the transmitter to the Insight PC software.

2.7.1 Device icons

Devices connected to the transmitter are identified on the display as follows. The same icons are shown in the Insight PC software.

Table 4 Device icons on transmitter display

Icon	Meaning
A	Measurement comes from a probe connected to splitter cable branch A. The Insight PC software shows this icon also if only one probe is connected to the transmitter.
B	Measurement comes from a probe connected to splitter cable branch B.
M1	Measurement or output/input comes from a module connected to slot M1 on the transmitter component board.
M2	Measurement or output/input comes from a module connected to slot M2.
M3	Measurement or output/input comes from a module connected to slot M3.

The table below shows examples of measurement views on the transmitter display.

Table 5 Examples of measurement views on transmitter display

Display example	Description
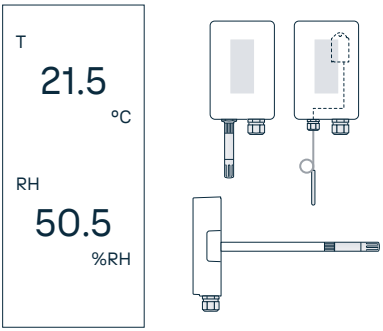	All measurement parameters shown on the display come from a single source device. The source device can be: • Probe connected to the probe connector at the bottom of the enclosure • Probe connected to the duct pipe at the back of the enclosure • Module connected to slot M1, M2 or M3 on the transmitter component board

Display example	Description
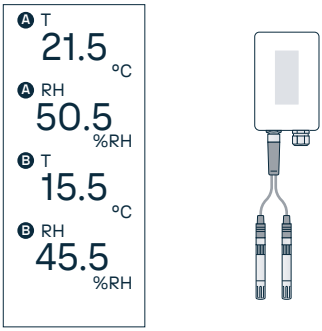	The measurements shown come from probes connected to the transmitter's probe connector via a splitter cable. • Probe A is the one connected to the branch marked as A on the splitter cable. • Probe B is the one connected to the branch marked as B.
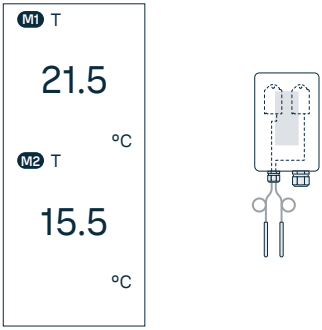	The measurements shown come from two modules connected to any of the slots M1, M2, or M3 on the transmitter component board.

2.7.2 Abbreviations of parameters

The transmitter shows the names of parameters on its display using abbreviations. The table below provides the mapping between the name and abbreviation of parameters supported by devices compatible with Origo10.

Table 6 Parameter abbreviations on transmitter display

Parameter	Abbreviation on display
Absolute humidity	a
Binary input	Bin
Binary output	Bout
Carbon dioxide concentration	CO2
Dew point temperature	Td

Parameter	Abbreviation on display
Dew/frost point temperature	Td/f
Enthalpy	h
Mixing ratio	x
Relative humidity	RH
Temperature	T
Water vapor pressure	pw
Water vapor saturation pressure	pws
Wet-bulb temperature	Tw
Other	

2.7.3 Status icons

Table 7 Status icons on transmitter display

Icon	Icon name	Meaning
i	Information	An informative notification is active.
⚠	Error	A device error is active.
USB	Service port active	Service port is in use.

More information

- Display messages (page 112)

2.8 LED indicator

The status of the transmitter and the connected devices is shown on the transmitter display. In non-display transmitters, the device status is indicated by the LED only. To see, for example, active warning messages, connect the transmitter to the Insight PC software.

Table 8 LED statuses

LED color and flashes		Description
-	Not lit	Power is off.
☀ – –	Green, blinking with long interval (3 s)	The transmitter and the connected devices are working normally. Normal measurement.

LED color and flashes		Description
	Green, blinking with short interval (500 ms)	The transmitter is performing a firmware update.
	Red, blinking with long interval (2 s)	The transmitter and/or the connected devices are in error state. Connect the transmitter to the Insight PC software to get more information and to configure.
	Red, blinking with short interval (500 ms)	The user is pressing the transmitter's **mode** button to restart the transmitter, or to confirm a factory reset.

More information

- Display messages (page 112)
- Connecting to Insight PC software (page 77)

2.9 Service port

The transmitter's component board has a service port which provides a local interface for performing local configuration and service actions using a computer connection. The service port connector is a standard female USB-C connector. Standard USB cables can be used to connect the transmitter to a computer.

- Any computer that supports Media Transfer Protocol (MTP) can perform firmware updates.
- Computers with a compatible Windows® operating system can use the Vaisala Insight PC software to configure the settings of the transmitter and connected source devices, and perform firmware updates.

You can also use the service port to supply temporary operating power to the transmitter for limited functionality. Do not attempt to use the service port to permanently power the transmitter.

More information

- Connecting to Insight PC software (page 77)
- Updating firmware (page 109)

2.10 Safety

If any instructions in this document conflict with your local or state legislation or regulations, always follow the local or state legislation or regulations.

Only a skilled person may install, operate, and service the device or system.
Skilled person = Persons with relevant education or experience to enable them to identify hazards and to take appropriate actions to reduce the risks of injury to themselves and others.

The assembler is responsible for the safety of the system into which the device is integrated.

WARNING! Electricity hazard
Handling energized wires can cause electric shock. Prepare or connect only de-energized wires.

WARNING! Electricity hazard
To protect people from electric shock and property from fire, a readily accessible disconnect device must be incorporated in the fixed wiring.

CAUTION! Electricity hazard
Lightning strikes can cause transient voltages from external circuits. To prevent this, connect the transmitter to equipment that is installed within the same building structure and shares the same grounding network.

CAUTION! The power source for Origo10 transmitters must be limited to a maximum of 100 VA, either inherently by the power supply itself or through appropriate overcurrent protection. The supply voltage must not exceed the maximum operating voltage specified in the device's technical data.
Always choose a power supply unit that conforms to the local standards and requirements.
In North America, only power the device with one of the following:

- A certified Class 2 power supply
- A certified Limited Power Source (LPS) compliant with CAN/CSA-C22.2 No. 60950-1 or UL 60950-1

NOTICE! High voltage surges and conducted interference can cause product damage or affect measurement results. To prevent this, ground the transmitter's **sh/gnd** terminal to the local earth with the shortest possible wiring.

NOTICE! To minimize electromagnetic interference in transmitters powered with AC, connect wiring to the terminals from the right.

Consult local authorities and electricity professionals on decisions that relate to grounding, safe installation, and power supply.

WARNING! Chemical hazard
Devices removed from process may have been contaminated, which can cause injury to the persons handling them. When returning a device for calibration or repair, make sure you send only devices that are safe to handle without special precautions.

WARNING! Magnetic hazard
The magnetic bracket accessory (item code ASM215638SP) has a strong magnet. Magnets can cause serious harm by interfering with the operation of pacemakers and other implanted medical devices. Keep the magnet away from persons with such devices, and from any other devices that are sensitive to magnetic fields. Do not separate the magnet from its enclosure.

If the product is used in a manner not specified by Vaisala, the protection provided by the product may be impaired. Follow the instructions.

CAUTION! Modification of the product can result in injury or damage the product. Do not modify the product or substitute parts unless instructed to do so. Improper modification voids your warranty.

CAUTION! Using components that do not meet Vaisala specifications can result in injury or damage the product. Use only accessories and spare parts that meet the specifications.

NOTICE! Connecting incompatible devices or cables can damage the equipment. For compatible devices and cables, see the product specifications.

Failure to comply with the warnings and cautions in these instructions violates safety standards of design, manufacture, and intended use of the product. Vaisala assumes no liability for the failure to comply with these requirements.

2.10.1 ESD protection

Electrostatic discharge (ESD) can damage electronic circuits. Vaisala products are adequately protected against ESD for their intended use. However, it is possible to damage the product by delivering electrostatic discharges when touching, removing, or inserting any objects in the equipment housing.

To avoid delivering high static voltages to the product:

- Handle ESD-sensitive components on a properly grounded and protected ESD workbench or by grounding yourself to the equipment chassis with a wrist strap and a resistive connection cord.
- If you are unable to take either precaution, touch a conductive part of the equipment chassis with your other hand before touching ESD-sensitive components.
- Hold component boards by the edges and avoid touching component contacts.

3. Installation

3.1 Installation tools and safety

- Drill with suitable, long enough bits for mounting the transmitter to duct or wall
- Flat head screwdriver 2.5 × 0.5 mm, for the wiring terminals
- Crimping tool and wire ferrules
- Utility knife
- Glands, conduits, plugs and cables as required by your application
- Suitable tools for tightening the cable glands, conduits and/or plugs required by your application. For example:
  - Set of combination wrenches 14-22 mm
  - Flat head screwdriver 6.5 × 38 mm, for the plug for closing the unused lead-through at the back of the transmitter enclosure

See the task-specific tools lists for additional special tools needed for the actual installation task.

Wire ferrules are recommended for the push-in spring terminals of the transmitter.

WARNING! Electricity hazard
Handling energized wires can cause electric shock. Prepare or connect only de-energized wires.

WARNING! Electricity hazard
To protect people from electric shock and property from fire, a readily accessible disconnect device must be incorporated in the fixed wiring.

CAUTION! Electricity hazard
Lightning strikes can cause transient voltages from external circuits. To prevent this, connect the transmitter to equipment that is installed within the same building structure and shares the same grounding network.

NOTICE! High voltage surges and conducted interference can cause product damage or affect measurement results. To prevent this, ground the transmitter's **sh/gnd** terminal to the local earth with the shortest possible wiring.

NOTICE! To minimize electromagnetic interference in transmitters powered with AC, connect wiring to the terminals from the right.

CAUTION! The power source for Origo10 transmitters must be limited to a maximum of 100 VA, either inherently by the power supply itself or through appropriate overcurrent protection. The supply voltage must not exceed the maximum operating voltage specified in the device's technical data.
Always choose a power supply unit that conforms to the local standards and requirements.
In North America, only power the device with one of the following:

- A certified Class 2 power supply
- A certified Limited Power Source (LPS) compliant with CAN/CSA-C22.2 No. 60950-1 or UL 60950-1

3.2 Selecting location

Installation to direct UV light is not recommended.

When installing wall-mounted transmitters with a directly-attached probe (no cable):

- Select a location that represents well the area of interest.
- Avoid installing on the ceiling or mounting the transmitter upside down on a wall, as this orientation may lead to heat transfer that could affect the measurement results.

When installing wall-mounted transmitters with a cable-attached probe:

- Select a location for the probe that represents well the area of interest.
- The transmitter can be in any convenient location.

When installing duct-mounted transmitters:

- Make sure there is a sufficient clearance between the probe body and any possible humidifier. Avoid installing in a location where condensation can fall on the sensor inside the duct.
- Position the sensor in the center of the duct.
- Select a site where the transmitter can be installed horizontally, onto the side of the duct. Do not point the probe downward, as this will make condensation run down to the sensor.
- Avoid installing the transmitter in dead legs. Supersaturation can occur in areas where there is no air flow.

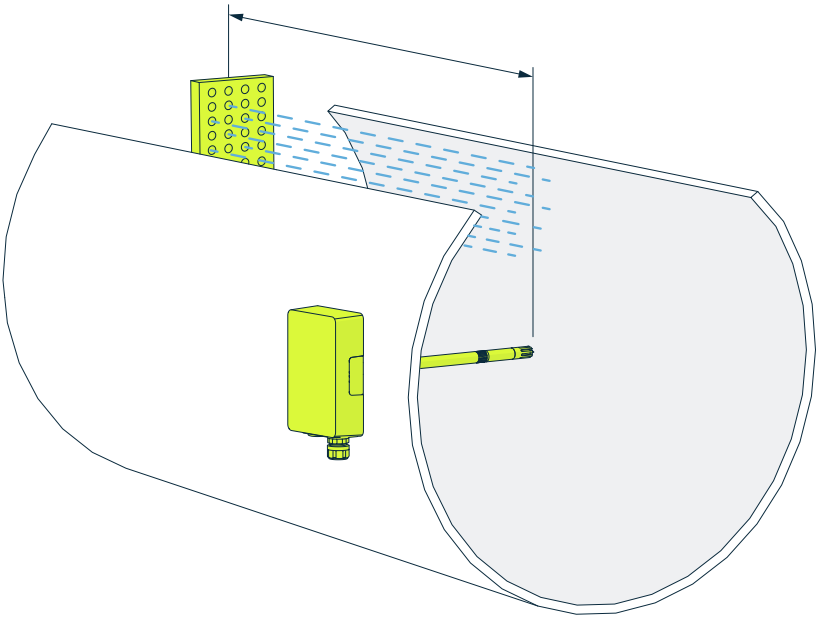

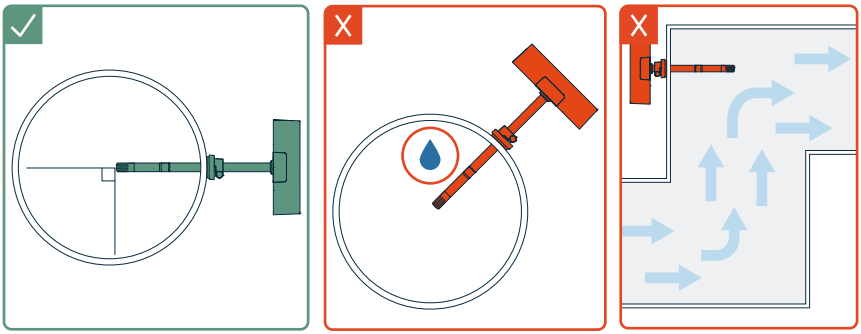

Figure 10 Selecting location for duct-mounted transmitter

3.3 Installation overview

The installation steps of the Origo10 transmitter depend on the transmitter model: duct-mounted or wall-mounted, and whether the transmitter has the Origo10A or Origo10L transmitter component board in it. See the following sections for an overall outline of the installation steps for each combination.

More information

- Installation overview for duct-mounted transmitters (page 41)
- Installation overview for wall-mounted transmitters (page 41)

3.3.1 Installation overview for duct-mounted transmitters

The following table outlines the installation tasks for duct-mounted transmitters. See the type label of your device to identify whether your transmitter is of type Origo10L or Origo10A. The L or A type is identified by the first digit in the device configuration code.

Table 9 Installation overview for duct-mounted transmitters

Installation task	Instructions
Cable routing	Wiring through bottom lead-through (page 45) M12 connector pin-out for Modbus/BACnet connectivity (page 48)
Installation to duct	Duct model installation (page 48)
Wiring Origo10L devices	Wiring Origo10L devices (page 61)
Wiring Origo10L having optional modules	Wiring TMM10 temperature measurement module (page 71)
Wiring Origo10A devices	Wiring Origo10A devices (page 64)
Wiring Origo10A having optional modules	Wiring DIO10 relay output module (page 68) Wiring TMM10 temperature measurement module (page 71)

More information

- Configuration code key (page 15)

3.3.2 Installation overview for wall-mounted transmitters

The following table outlines the installation tasks for wall-mounted transmitters. See the type label of your device to identify whether your transmitter is of type Origo10L or Origo10A. The L or A type is identified by the first digit in the device configuration code.

Table 10 Installation overview for wall-mounted transmitters

Installation task	Instructions
Cable routing	Wiring through bottom lead-through (page 45) Wiring from the back (page 46) M12 connector pin-out for Modbus/BACnet connectivity (page 48)
Wall installation	Wall model installation (page 51) Mounting with adapter plate (page 53) Mounting with DIN rail adapter (page 54) Mounting with magnetic bracket (page 56)
Connecting probes	Connecting probes to transmitter (page 57)
Wiring Origo10L devices	Wiring Origo10L devices (page 61)
Wiring Origo10L having optional modules	Wiring TMM10 temperature measurement module (page 71)
Wiring Origo10A devices	Wiring Origo10A devices (page 64)
Wiring Origo10A having optional modules	Wiring DIO10 relay output module (page 68) Wiring TMM10 temperature measurement module (page 71)

More information

- Configuration code key (page 15)

3.4 Opening transmitter cover

WARNING! Electricity hazard
Opening the transmitter exposes potentially energized and ESD sensitive parts. Handling energized wires can cause electric shock. Prepare or connect only de-energized wires.

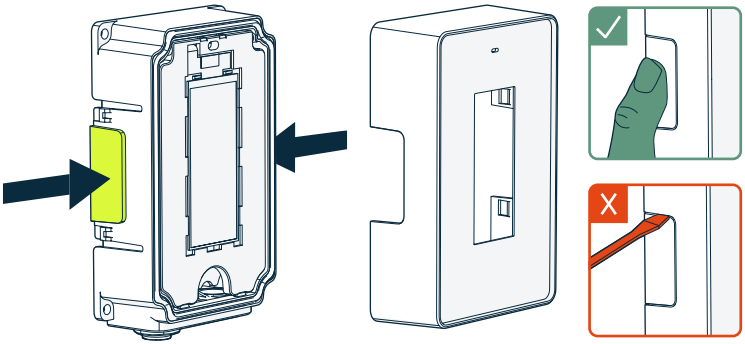

Figure 11 Opening transmitter cover

NOTICE! To avoid damage to the sealing of the cover, always open the cover by hand only. Do not use any tools to open the cover.

1. To open, push down the tabs on both sides of the enclosure and pull the cover straight off.
2. To close, place the cover on top of the enclosure and push. Check that both side tabs are level with the cover.

3.5 Opening display panel

Transmitters ordered with a display have a special panel under the cover for the display. Open the panel to access the transmitter component board with functionalities such as wiring terminals, **mode** button and service port.

WARNING! Electricity hazard
Opening the transmitter exposes potentially energized and ESD sensitive parts. Handling energized wires can cause electric shock. Prepare or connect only de-energized wires.

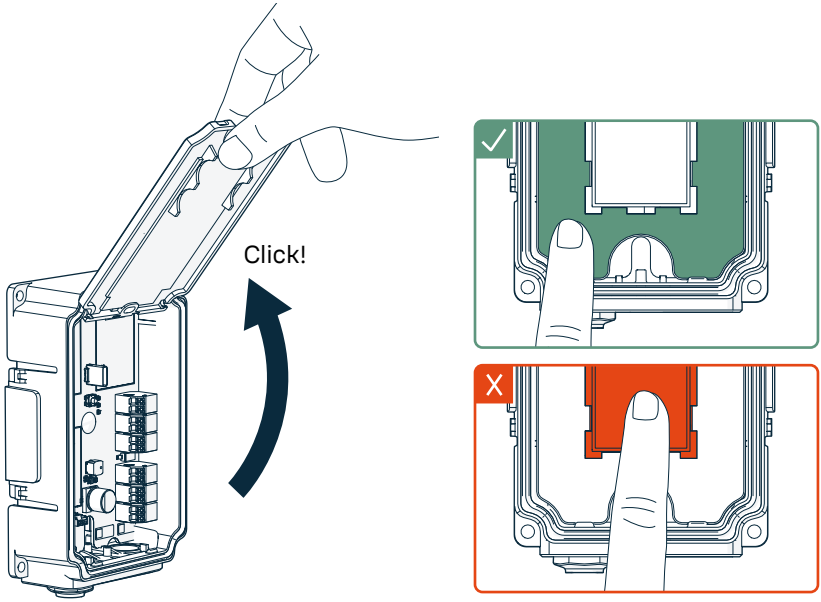

Figure 12 Opening and closing display panel

1. Open the transmitter cover.
2. Lift the panel upwards until it snaps **audibly** to the open position.
3. To close, lower down the panel back to its original position.

   Do not push the display.

3.6 Cable routing options

You can wire wall-mounted transmitters through the cable lead-through on the bottom of the transmitter enclosure, or from the back.

Duct-mounted transmitters can be wired through the lead-through on the bottom.

More information

- Wiring through bottom lead-through (page 45)
- Wiring from the back (page 46)

3.6.1 Wiring through bottom lead-through

- Combination wrench 20 mm, for the standard cable gland
- Combination wrench 14 mm / 20 mm, for the hygienic cable gland
- Flat head screwdriver 2.5 × 0.5 mm, for the wiring terminals
- Flat head screwdriver 6.5 × 38 mm, for the plug for closing the unused lead-through at the back of the transmitter enclosure
- Crimping tool and wire ferrules
- Utility knife

The following figure shows an example of wiring the transmitter through the lead-through on the bottom of the enclosure. The standard cable gland is shown on the left, while the hygienic gland for cleanrooms is shown on the right.

NOTICE! To minimize electromagnetic interference in transmitters powered with AC, connect wiring to the terminals from the right.

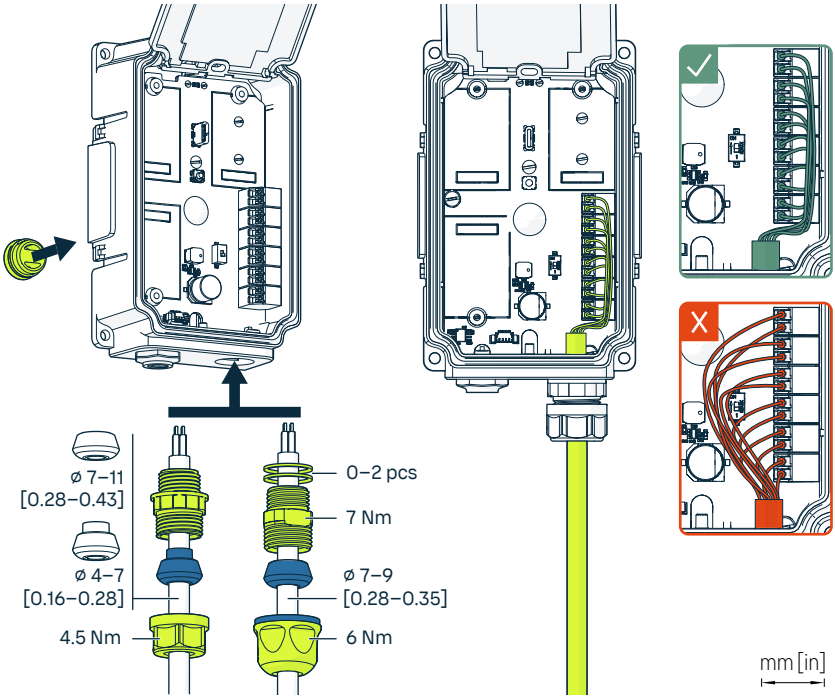

Figure 13 Wiring through bottom lead-through

1. Before connecting wires or cables, make sure that the transmitter is powered off.
2. Open the transmitter cover.
3. If you have a transmitter with a display, open the display panel to access the transmitter component board.
4. Tighten the base of the cable gland to the chosen lead-through.
5. Insert a suitable length of the cable inside the enclosure through the gland.

   Reserve enough wire length to access all necessary terminals and modules.
6. Connect the wiring to the applicable terminals as per the output options relevant to your transmitter.

   For wiring diagrams for the different transmitter models and output options, see:
   - Wiring Origo10L devices (page 61)
   - Wiring Origo10A devices (page 64)

   When you have connected the power supply wiring, the transmitter LED will start to blink green.
7. Tighten the gland nut to the gland base. Avoid overtightening.
8. Check that every unused lead-through is plugged.
9. Lower down the display panel.
10. Close the transmitter cover.

More information

- Duct model installation (page 48)
- Wall model installation (page 51)

3.6.2 Wiring from the back

- Combination wrench 18 mm, for the plug for closing the unused lead-through on the bottom of the transmitter enclosure
- Combination wrench 20 mm, for the standard cable gland
- Flat head screwdriver 2.5 × 0.5 mm, for the wiring terminals
- Crimping tool and wire ferrules
- Utility knife

The following figure shows an example of wiring the transmitter through the lead-through at the back of the transmitter.

NOTICE! To minimize electromagnetic interference in transmitters powered with AC, connect wiring to the terminals from the right.

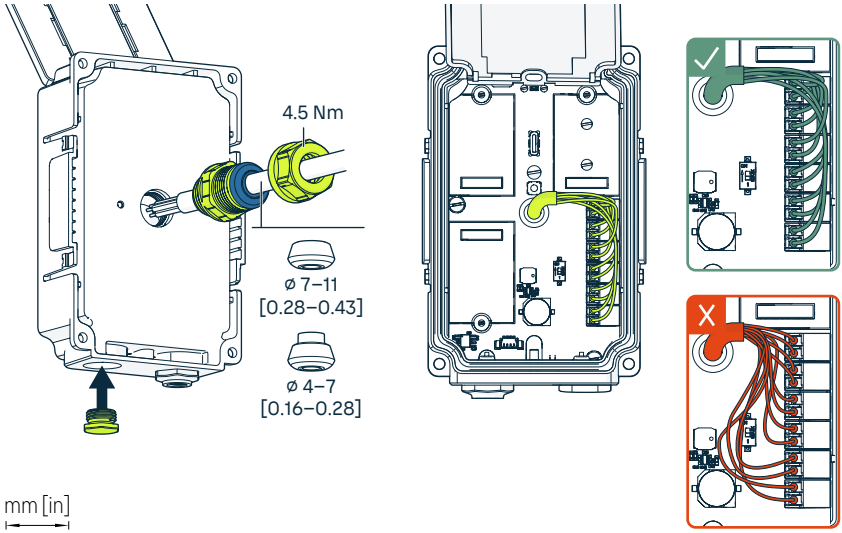

Figure 14 Wiring from the back

1. Before connecting wires or cables, make sure that the transmitter is powered off.
2. Open the transmitter cover.
3. If you have a transmitter with a display, open the display panel to access the transmitter component board.
4. Tighten the base of the cable gland to the chosen lead-through.
5. Insert a suitable length of the cable inside the enclosure through the gland.

   Reserve enough wire length to access all necessary terminals and modules.
6. Connect the wiring to the applicable terminals as per the output options relevant to your transmitter.

   For wiring diagrams for the different transmitter models and output options, see:
   - Wiring Origo10L devices (page 61)
   - Wiring Origo10A devices (page 64)

   When you have connected the power supply wiring, the transmitter LED will start to blink green.
7. Tighten the gland nut to the gland base. Avoid overtightening.
8. Check that every unused lead-through is plugged.
9. Lower down the display panel.

10. Close the transmitter cover.

More information

- Wall model installation (page 51)

3.6.3 Verifying tightness of cable glands

- Adjustable wrench

To maintain enclosure tightness and provide strain relief to the cables, all cable glands must be tightened. Unused cable glands must remain plugged.

1. Check every cable gland that is in use:
   a. Pull on the cable to verify that the cable is securely held by the cable gland.
   b. Tighten the cable gland if the cable moves.
2. Check that every unused cable gland is plugged and tightened.

3.6.4 M12 connector pin-out for Modbus/BACnet connectivity

Origo10A transmitters can be ordered with an M12 connector for Modbus and BACnet connectivity.

Table 11 M12 connector pin-out for Origo10A Modbus/BACnet connectivity

Connector pin-out [1]	Pin	Function
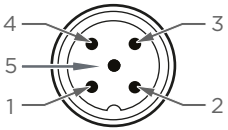	Pin 1	V +
	Pin 2	bus -
	Pin 3	V -
	Pin 4	bus +
	Pin 5	bus gnd

1) *The connector body is connected to the internal **sh/gnd** terminal of the transmitter to maintain cable shield continuity.*

3.7 Duct model installation

Select the location for the transmitter as instructed in Selecting location (page 39). Do not point the probe downward, as this will make condensation run down to the sensor.

Wear protective eyewear.

- Medium size crosshead screwdriver (Pozidriv) and screws for attaching the fastening flange to the duct (included)
- Drill with 2.5-mm and 13-mm bits for making installation holes to the duct
- Combination wrench 18 mm, for the plug for closing the unused lead-through on the bottom of the transmitter enclosure

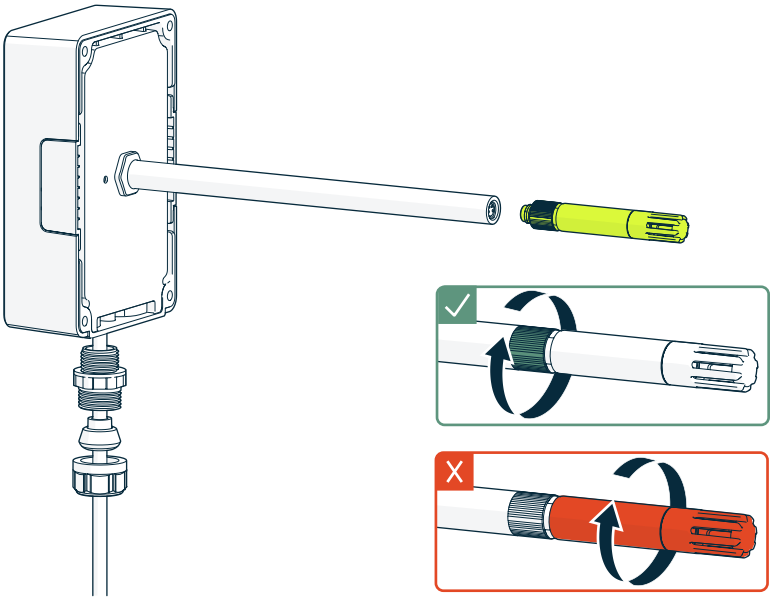

Figure 15 Attaching probe to duct-mounted transmitter

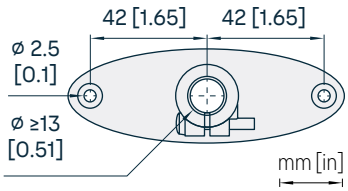

Figure 16 Duct fastening flange with installation hole drilling dimensions

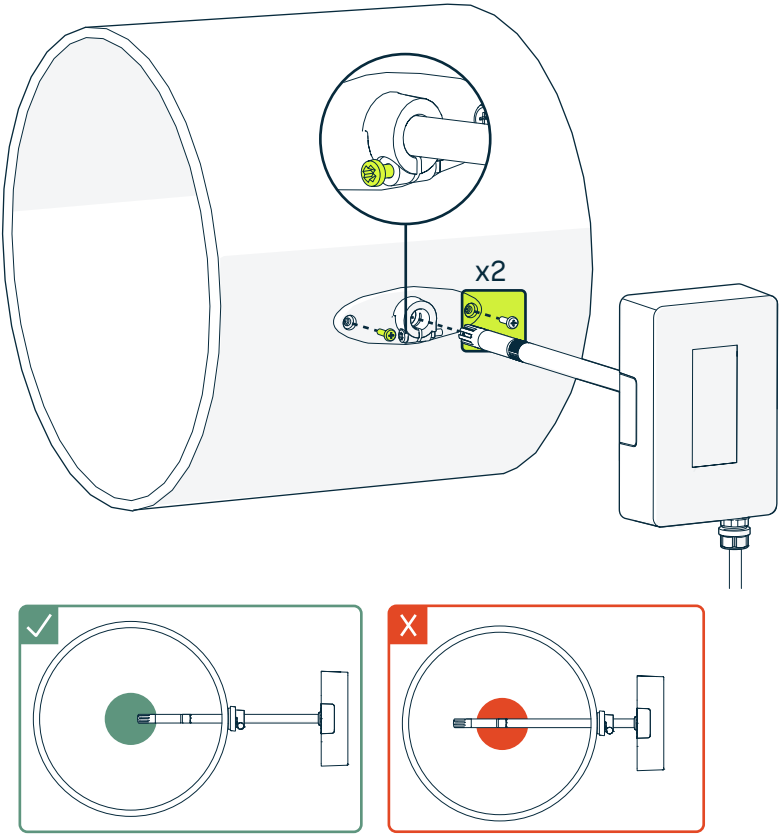

Figure 17 Installing transmitter to duct

1. Attach the probe to the duct pipe at the back of the transmitter by turning the locking wheel on the probe. **Never turn from the probe body.**
2. Use the flange and/or a ruler to mark the location and size of the installation holes on the side of the duct.

   The flange must be installed lengthwise parallel to the duct.
3. Drill the installation holes in the duct. Secure the fastening flange to the duct with the two screws (included).
4. Push the probe of the transmitter through the flange and into the duct. The probe should reach far enough so that the sensor is located in the middle of the duct.

5. Secure the transmitter to the flange by tightening the screw on the flange that holds the probe in place.
6. If you have a transmitter with a display, open the display panel to access the transmitter component board.
7. Connect the wiring to the applicable terminals as per the output options relevant to your transmitter.

   For wiring diagrams for the different transmitter models and output options, see:
   - Wiring Origo10L devices (page 61)
   - Wiring Origo10A devices (page 64)
8. Plug the unused feedthrough.
9. Lower down the display panel.
10. Close the transmitter cover.

More information

- Wiring through bottom lead-through (page 45)
- Wiring Origo10L devices (page 61)
- Wiring Origo10A devices (page 64)

3.8 Wall model installation

- 4 pcs non-countersunk screws (head diameter 6 mm, max. thread diameter 3.5 mm) and wall plugs. Select the screws and plugs according to the properties of the installation surface.
- Drill with a suitable, long enough drill bit

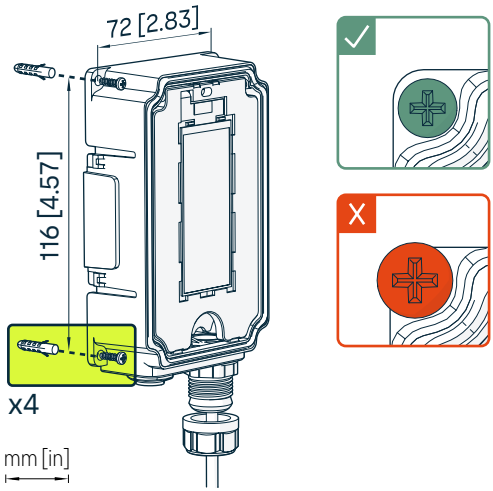

Figure 18 Mounting to wall

1. Open the transmitter cover.
2. Hold the transmitter base level against the installation surface and use a pen to mark the places of mounting holes.
3. Drill the mounting holes and insert wall plugs in the holes.
4. Mount the transmitter base using four screws. Make sure to use the right size of screws. The screw size must not exceed the size of the transmitter base.
5. If you have a transmitter with a display, open the display panel to access the transmitter component board.
6. Connect the wiring to the applicable terminals as per the output options relevant to your transmitter.

   For wiring diagrams for the different transmitter models and output options, see:
   - Wiring Origo10L devices (page 61)
   - Wiring Origo10A devices (page 64)
7. Lower down the display panel.
8. Close the transmitter cover.

More information

- Wiring through bottom lead-through (page 45)
- Wiring from the back (page 46)
- Wiring Origo10L devices (page 61)
- Wiring Origo10A devices (page 64)

3.8.1 Mounting with adapter plate

- Adapter plate installation kit (item code DRW261417SP) including 4 pcs PLASTOFAST 1412 PZ A2 3.5×8 mm screws for attaching the transmitter to the adapter plate
- Suitable accessories for attaching the adapter plate to the installation surface (for example, screws or cable ties)
- Screwdriver

Using an adapter plate, you can mount the transmitter, for example, on top of a junction box.

The adapter plate has an opening for cables in the middle, which you can utilize if you intend to wire the transmitter through the back. Lead the cables through the opening to the inside of the transmitter enclosure before mounting.

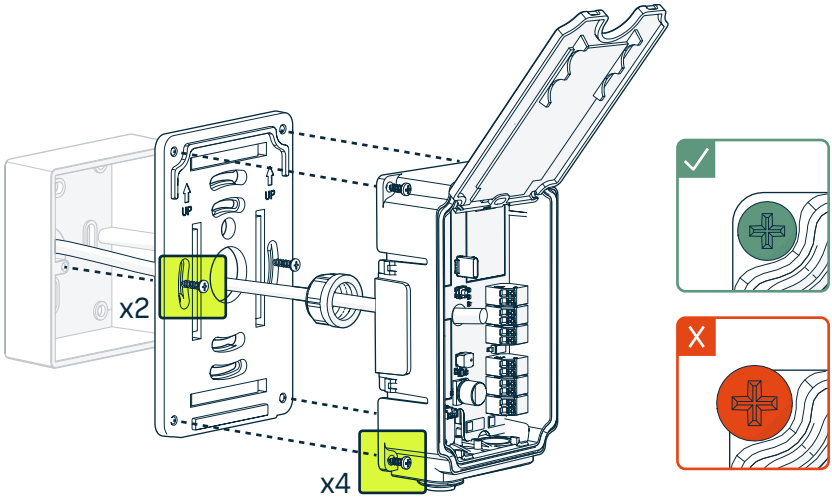

Figure 19 Mounting with adapter plate, wiring from the back

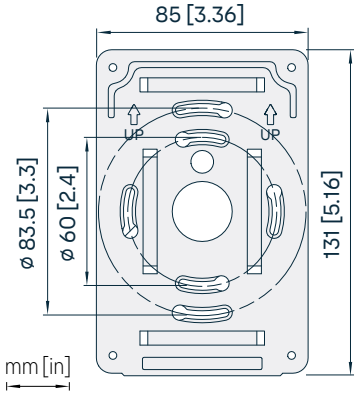

Figure 20 Adapter plate mounting dimensions

1. Position the plate on top of the junction box.
2. Attach the plate using the applicable slots on the plate.
3. Open the transmitter cover.
4. If you have a transmitter with a display, open the display panel to access the transmitter component board.
5. Position the transmitter enclosure on top of the adapter plate. If wiring from the back, lead the cables through the openings to the inside of the transmitter enclosure.
6. Attach the transmitter enclosure to the adapter plate using the four slots on the corners and the screws included in the adapter package.
7. Connect the wiring to the applicable terminals according to the wiring instructions.
8. Lower down the display panel.
9. Close the transmitter cover.

3.8.2 Mounting with DIN rail adapter

- DIN rail adapter installation kit (item code 284769)
- Plug for the unused lead-through at the back of the transmitter enclosure
- Flat head screwdriver 6.5 × 38 mm, for the plug for closing the unused lead-through at the back of the transmitter enclosure

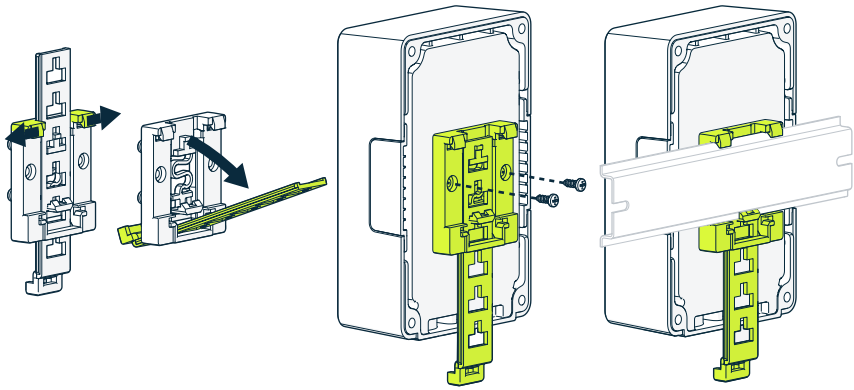

Figure 21 Mounting with DIN rail adapter

1. Plug the unused lead-through at the back of the transmitter.
2. The DIN rail adapter consists of an operating latch which can be used to release the transmitter from the rail, and a base. Adjust the length of the latch first:
   a. Bend the upper parts of the base outwards and push the latch to release it.
   b. Tilt the latch and select the desired hole in the base, then press the latch down to lock it to the base. The upper part of the latch needs to be level with the upper part of the base, as shown in the figure above.
3. Attach the base of the adapter to the two mounting holes at the back of the transmitter. The screws are included in the adapter package. Do not overtighten.
4. Snap the transmitter to the DIN rail.

5. To release the transmitter from the DIN rail, pull the latch downwards.

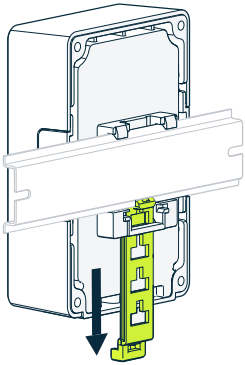

3.8.3 Mounting with magnetic bracket

- Magnetic bracket accessory (item code ASM215638SP)

WARNING! Magnetic hazard
This accessory has a strong magnet. Magnets can cause serious harm by interfering with the operation of pacemakers and other implanted medical devices. Keep the magnet away from persons with such devices, and from any other devices that are sensitive to magnetic fields. Do not separate the magnet from its enclosure.

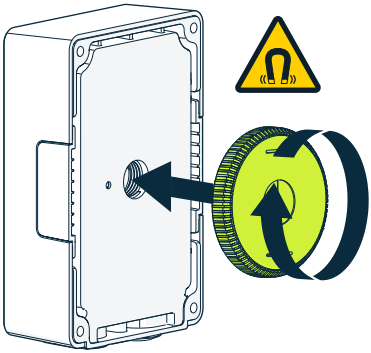

Figure 22 Attaching magnetic bracket to transmitter

1. Insert the screw of the magnetic bracket into the threads at the back of the transmitter.
2. Rotate the magnetic bracket clockwise to attach it to the threads on the transmitter. Tighten to finger tightness.

3.8.4 Connecting probes to transmitter

Depending on the probe model, probes can be connected to the transmitter directly or with a cable. There is no need to power off the transmitter first.

- XMP10 probes: Connected directly or with a cable
- HMP60 and HMP110 series probes, TMP115 probe, GMP250 series probes and DMT143 transmitter: With a cable

NOTICE! Connecting incompatible devices or cables can damage the equipment. For compatible devices and cables, see the product specifications.

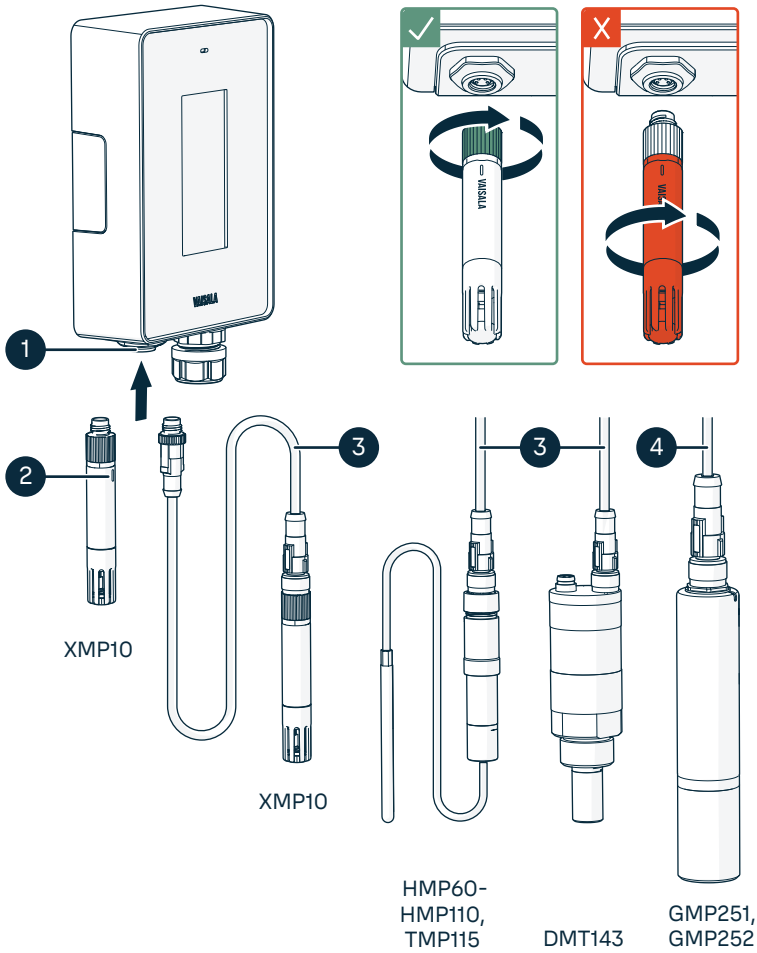

Figure 23 Connecting probes to Origo10 transmitter

1 Probe connector (4-pin female M8)
2 Orientation mark on the XMP10 probe for aligning the probe to connector
3 Probe connection cable (M8-M8) for XMP10, HMP60-HMP110 series, TMP115 and DMT143
4 Probe connection cable (M8-M12) for GMP251 and GMP252

1. To connect a probe directly (XMP10 probes only):
   a. Insert the probe into the probe connector of the transmitter with the orientation mark on the probe body facing out.
   b. Hold the probe in the connector and turn the locking wheel on the probe as far as it goes.

      Never turn from the probe body.
2. To connect with a probe connection cable (any probe): insert the cable into the probe connector and hold in place while tightening the locking ring on the cable.

When the transmitter recognizes the connected probe, it shows a notification message on the display. If you replaced the probe with another type of probe measuring different parameters, reconfigure the parameters and outputs for the new probe in the Insight PC software.

For mounting accessories available for cable-attached probes, see spare parts list and probe user guides at docs.vaisala.com.

More information

- Spare parts and accessories (page 120)

3.8.4.1 Connecting probes with splitter cable

A splitter cable accessory (Vaisala item code: 284332) is available for connecting two probes to the transmitter's probe connector simultaneously. The splitter cable works with XMP10, TMP115, HMP60-HMP110 series, and GMP250 series probes. All combinations of these probes, except for two GMP250 series probes, can be connected to the splitter cable branches. Check the device configuration code of your transmitter to detect the branch (A or B) preconfigured for each of the probes. The cable branches are marked with a sticker.

GMP250 series probes require an additional M8-M12 cable between the splitter cable and the probe.

The following figure shows an example of connecting XMP10 and GMP252 using the splitter cable, and an additional M8-M12 cable for the GMP252.

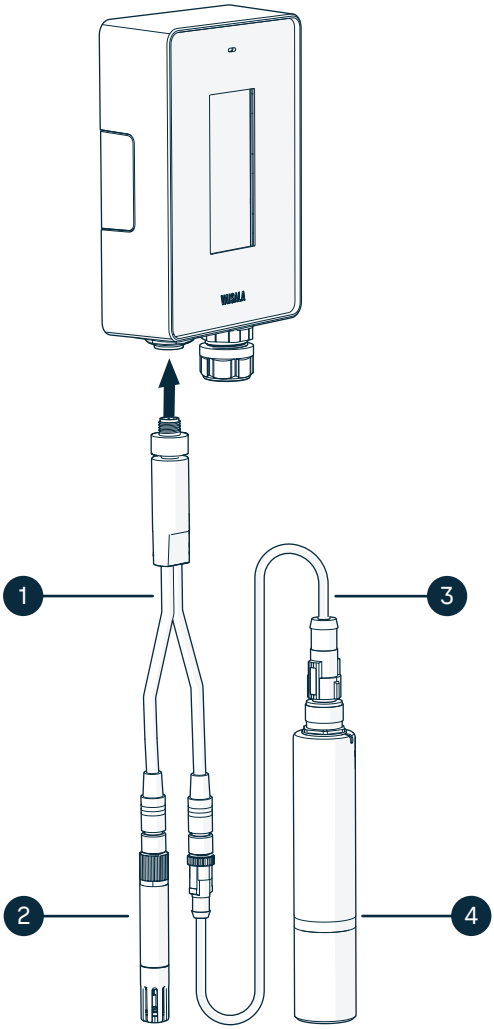

Figure 24 Connecting probes with splitter cable

1 Splitter cable (M8-M8/M8)
2 Example probe (XMP10)
3 M8-M12 probe connection cable for GMP250 series probes
4 Example probe (GMP252)

3.9 Wiring Origo10L devices

The supply voltage range of Origo10L transmitters is 20–30 V DC.

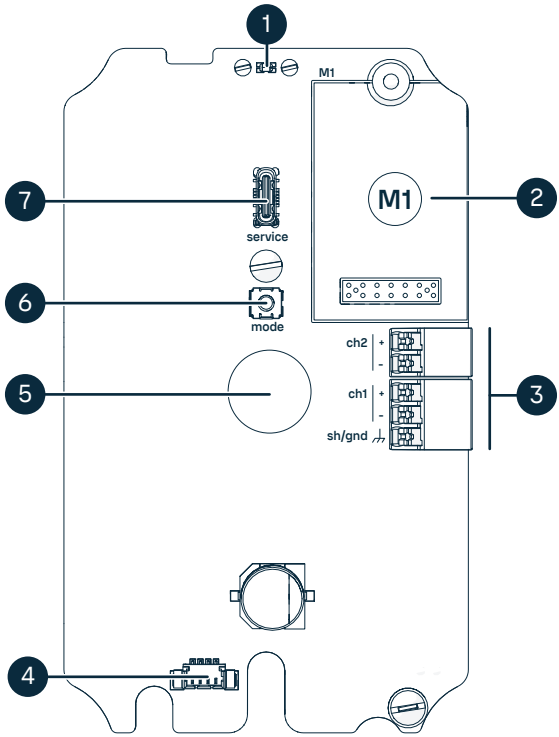

Figure 25 Origo10L component board

1 LED indicator
2 Module slot M1 for TMM10 temperature measurement module
3 Analog output terminals and grounding terminal. Channel 1 (ch1) powers up the Origo10L transmitter.
4 Probe terminal (wired at the factory)
5 Cable lead-through for wiring from the back (in wall models)
6 Button for device information, restart and factory reset
7 Service port (USB-C)

Table 12 Analog output and grounding terminals of Origo10L devices

Terminal	Function	Notes
ch1 +	Analog output channel 1 +	Connector type: Push-in spring terminals Wire size: 0.5–1.5 mm^2 (20 AWG–15 AWG)
ch1 -	Analog output channel 1 -	
ch2 +	Analog output channel 2 +	
ch2 -	Analog output channel 2 -	
sh/gnd	Grounding terminal	

NOTICE! High voltage surges and conducted interference can cause product damage or affect measurement results. To prevent this, ground the transmitter's **sh/gnd** terminal to the local earth with the shortest possible wiring.

Origo10L transmitters are designed for supply voltage range of 20–30 V DC. It is recommended to use high loop resistance to minimize possible self-heating effects.

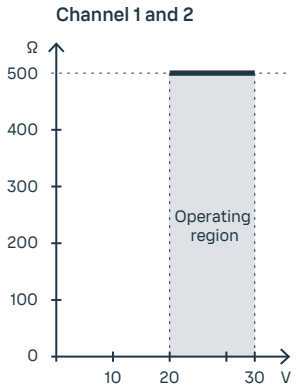

Figure 26 Origo10L maximum loop resistance and supply voltage operating region

Wiring diagrams

The following diagrams show examples for wiring the analog outputs of Origo10L transmitters. Channel 2 is isolated, so if you only need one channel, use channel 1 (the first current loop) to power the transmitter.

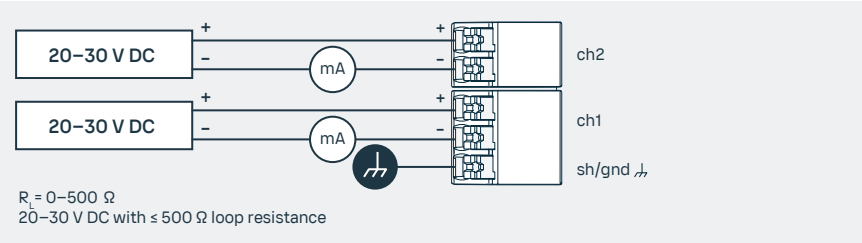

Figure 27 Origo10L wiring example, analog outputs with two power supplies

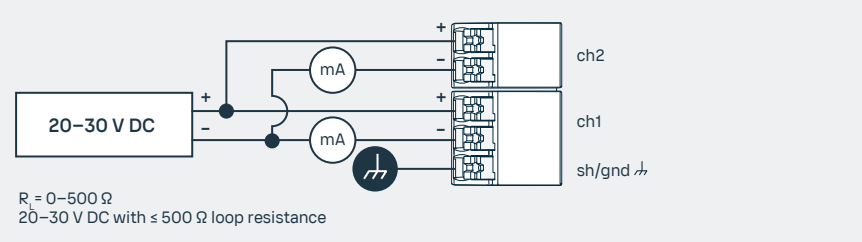

Figure 28 Origo10L wiring example, analog outputs with single power supply

3.10 Wiring Origo10A devices

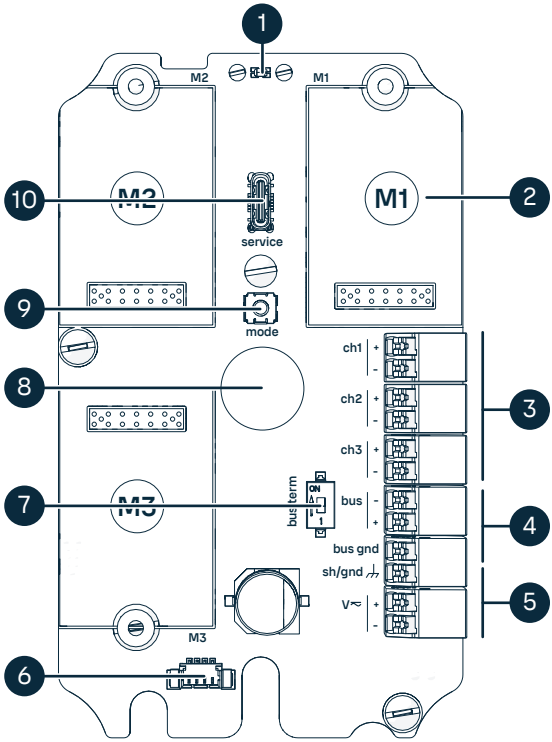

Figure 29 Origo10A component board

1 LED indicator
2 Module slots, labeled as M1...M3 on the component board. DIO10 relay output modules and TMM10 temperature measurement modules can be installed into these slots.
3 Analog output terminals
4 RS-485 output terminals (Modbus RTU or BACnet MS/TP)
5 Power supply input terminals
6 Probe terminal (wired at the factory)
7 RS-485 termination jumper
8 Cable lead-through for wiring from the back (in wall models)
9 Button for device information, restart and factory reset
10 Service port (USB-C)

3.10.1 Wiring devices with 3-wire analog outputs

Table 13 Analog output terminals of Origo10A devices

Terminal	Function	Notes
ch1 +	Analog output channel 1 +	Connector type: Push-in spring terminals Wire size: 0.5–1.5 mm^2 (20 AWG–15 AWG)
ch1 -	Analog output channel 1 -	
ch2 +	Analog output channel 2 +	
ch2 -	Analog output channel 2 -	
ch 3+	Analog output channel 3 +	
ch3 -	Analog output channel 3 -	

NOTICE! High voltage surges and conducted interference can cause product damage or affect measurement results. To prevent this, ground the transmitter's **sh/gnd** terminal to the local earth with the shortest possible wiring.

Table 14 Power supply input and grounding terminals of Origo10A devices

Terminal	Function	Notes
sh/gnd	Grounding terminal	
V +	Positive supply voltage	18–30 V DC or 24 V AC, ±10 %, 50/60 Hz
V -	Negative supply voltage	

Wiring diagrams

The following diagram shows examples for wiring the analog outputs of Origo10A transmitters.

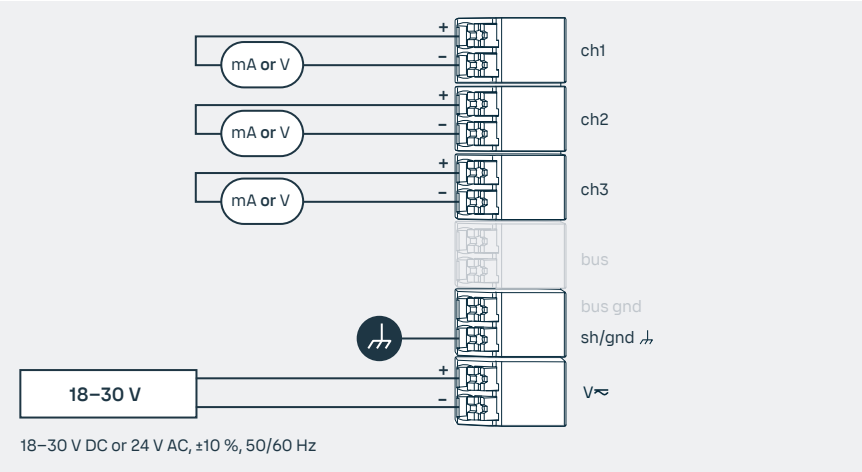

Figure 30 Origo10A wiring example, analog (mA or V) outputs

3.10.2 Wiring devices with Modbus/BACnet outputs

Use the designated terminals for supply power and Modbus/BACnet connectivity. Use twisted pair cabling so that positive and negative signals are in a pair. In addition to RS-485 data wires, the common wire (ground reference) can optionally be connected between the RS-485 host and the transmitter.

You can use up to 24 transmitters on the same RS-485 line. Use the Insight PC software to configure each transmitter on the line to have a different Modbus address or BACnet MAC address, depending on which protocol is used. In addition, make sure to terminate the bus at the last device using the switch on the transmitter component board.

Table 15 Modbus and BACnet terminals of Origo10A devices

Terminal	Function	Notes
bus -	RS-485 signal -	Connector type: Push-in spring terminals Wire size: 0.5–1.5 mm^2 (20 AWG–15 AWG)
bus +	RS-485 signal +	
bus gnd	Ground reference terminal for the RS-485 connection	

NOTICE! High voltage surges and conducted interference can cause product damage or affect measurement results. To prevent this, ground the transmitter's **sh/gnd** terminal to the local earth with the shortest possible wiring.

Table 16 Power supply input and grounding terminals of Origo10A devices

Terminal	Function	Notes
sh/gnd	Grounding terminal	
V +	Positive supply voltage	18–30 V DC or 24 V AC, ±10 %, 50/60 Hz
V -	Negative supply voltage	

Wiring diagrams

The following diagram shows how to wire the Modbus/BACnet outputs.

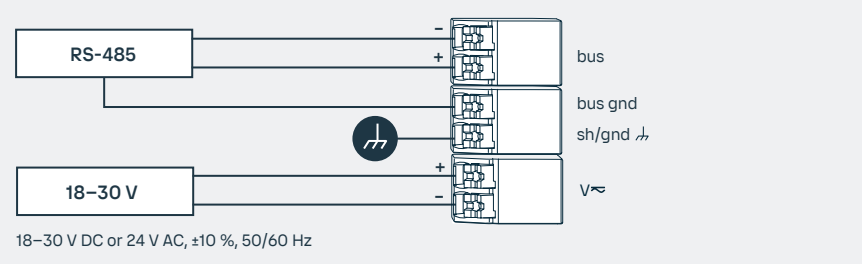

Figure 31 Origo10A wiring with Modbus/BACnet outputs

More information

- Configuring Modbus with Insight (page 82)
- Configuring BACnet with Insight (page 83)

3.10.2.1 Connecting several transmitters on same RS-485 line

Requirements for termination and biasing depend on various variables, for example, the number of devices on the bus, cabling specification and length, and data rate used. Therefore, specific bus implementation must always be considered when implementing the network.

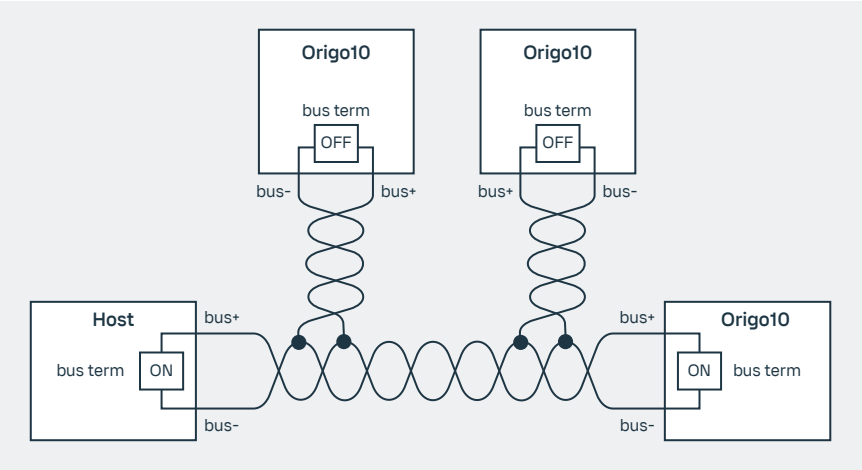

Figure 32 Several transmitters on same RS-485 line

1. Set the RS-485 termination jumper to the **ON** position on the transmitter that is at the end of the line. This terminates the line with a 120 Ω resistor.

3.10.3 Wiring DIO10 relay output module

- Crosshead screwdriver (PH1, shaft length 100 mm) for securing the module in place
- Flat head screwdriver 2.5 × 0.5 mm, for the wiring terminals
- Crimping tool and wire ferrules
- Utility knife
- Glands, conduits, plugs and cables as required by your application
- Suitable tools for tightening the cable glands, conduits and/or plugs required by your application. For example:
  - Combination wrench 20 mm, for the standard cable gland or combination wrench 14 mm / 22 mm, for the hygienic cable gland

The DIO10 relay output for Origo10A transmitters is a separate module component board connected to a module slot (M1-M3) on the main transmitter board. The module has screw terminals for wiring.

A binary input is also included on the DIO10 component board.

Relay output is not available in transmitters with the Origo10L (2-wire) configuration.

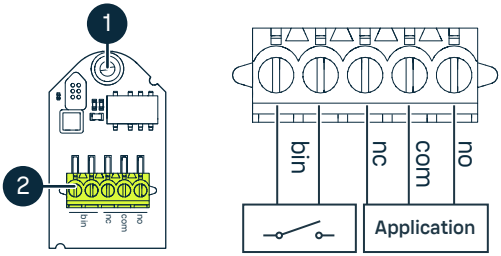

Figure 33 DIO10 relay output module component board

1 Fixing button for securing the module in place
2 Binary input terminals (bin), relay output terminals (nc, com, no)

Table 17 Relay output and binary input terminals

Terminal	Function	Notes
nc	Normally closed	Connector type: Screw terminals Wire size: 0.5–1.5 mm^2 (20 AWG–15 AWG)
com	Common	
no	Normally open	
bin	Binary input	

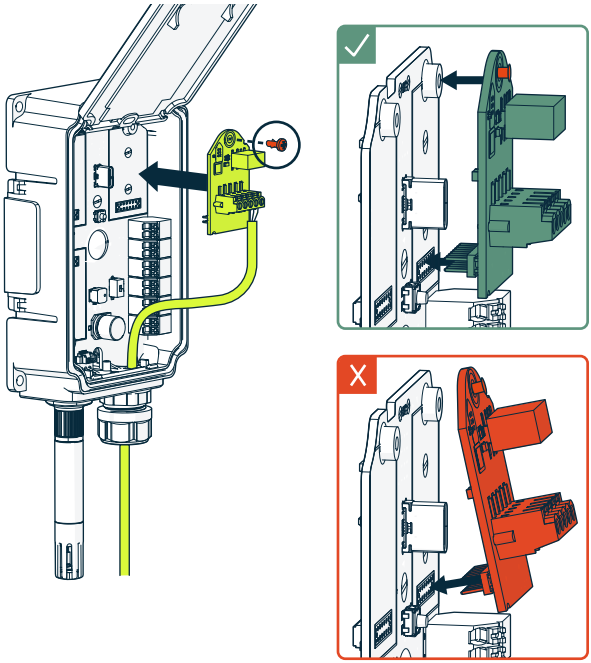

Figure 34 Installing and wiring DIO10 relay output module, example

1. Before connecting wires or cables, make sure that the transmitter is powered off.
2. Open the transmitter cover.
3. If you have a transmitter with a display, open the display panel to access the transmitter component board.
4. Tighten the base of the cable gland to the chosen lead-through.
5. Insert a suitable length of the cable inside the enclosure through the gland.

   Reserve enough wire length to access all necessary terminals and modules.
6. Tighten the gland nut to the gland base. Avoid overtightening.
7. Connect the wiring to the terminals on the module.
8. Attach the module to the transmitter component board (if not already attached).
   a. Push the module **straight** downward to the applicable module slot. Note the correct orientation of the connector pins.
   b. Secure the connector by pressing down the fixing button.
9. Lower down the display panel.

10. Close the transmitter cover.

3.11 Wiring TMM10 temperature measurement module

- Crosshead screwdriver (PH1, shaft length 100 mm) for securing the module in place
- Flat head screwdriver 2.5 × 0.5 mm, for the wiring terminals
- Crimping tool and wire ferrules
- Utility knife
- TMM10 cable gland with 1 hole (285207SP) or 2 holes (285206SP). The 2-hole gland is needed if you are installing two TMM10 modules instead of just one.
- Combination wrench 19 mm, for tightening the cable gland

The TMM10 temperature measurement module for Origo10L and Origo10A transmitters consists of a module component board, 3-m (9.8 ft) cable and sensor tip, delivered as assembled. Lead the cable outside the transmitter enclosure, attach the module to the chosen module slot (M1-M3) on the transmitter component board, and assemble the gland parts in place.

It is easiest to assemble the gland to the enclosure before mounting the transmitter enclosure.

A binary input is also included on the TMM10 component board. The input has screw terminals for wiring.

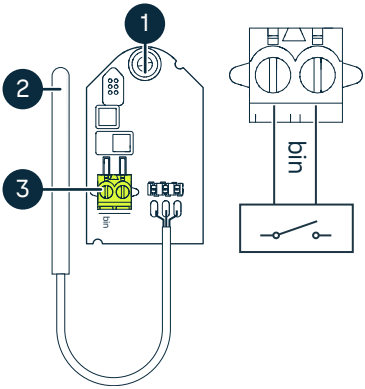

Figure 35 TMM10 temperature measurement module component board

1 Fixing button for securing the module in place
2 Pt1000 sensor tip with fixed cable
3 Binary input terminals (bin). Wire size: 0.5–1.5 mm^2 (20 AWG–15 AWG).

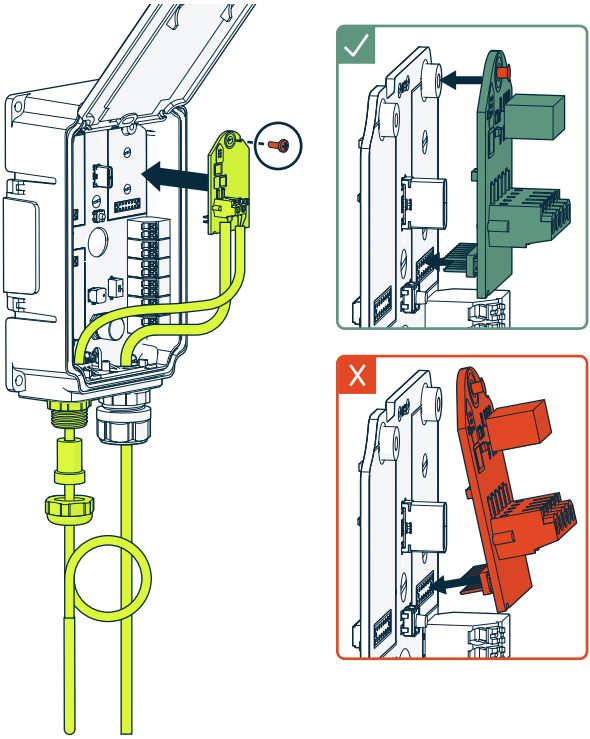

Figure 36 Installing and wiring TMM10 temperature measurement module, example

1. Before connecting wires or cables, make sure that the transmitter is powered off.
2. Open the transmitter cover.
3. If you have a transmitter with a display, open the display panel to access the transmitter component board.
4. Lead the cable outside the enclosure: Insert the sensor tip through the left-side lead-through at the bottom of the transmitter.
5. Connect the wiring to the binary input terminals of the module, if needed.
6. To attach the module to the transmitter component board:
   a. Push the module **straight** downward to the applicable module slot. Note the correct orientation of the connector pins.
   b. Secure the connector by pressing down the fixing button.
7. Tighten the base of the cable gland to the lead-through.

8. Open the split bushing of the gland, insert the cable inside the bushing, and then slide the bushing upwards into the gland base. Make sure the transparent sleeve on the cable is positioned inside the bushing. It acts as a strain relief for the cable.
9. Insert the sensor tip through the nut of the cable gland.
10. Tighten the gland nut to the gland base. Avoid overtightening.
11. Lower down the display panel.
12. Close the transmitter cover.

4. Using transmitter with Insight PC software

4.1 Vaisala Insight PC software

Vaisala Insight PC software is a configuration and calibration software for Vaisala devices. Insight is available for the Windows operating system (64-bit only). For a full list of supported operating system versions, see vaisala.com/insight.

To ensure support for your device, download the latest version of Insight at vaisala.com/insight.

With the Insight PC software connected to your transmitter, you can:

- See real-time measurements and device and status information
- Configure the output and input options of the transmitter
- Set a passcode for protecting the transmitter's and connected devices' configuration
- Restart the transmitter, restore factory default settings, and update the transmitter firmware
- Calibrate and adjust the measurements and outputs of the devices connected to the transmitter
- Configure the connected devices' features and settings. The available features and settings depend on the device model and firmware version. For more information, see your device's user documentation at docs.vaisala.com.

4.2 Insight PC software overview

Figure 37 Insight PC software main menu view with one Origo10, one connected probe and two connected modules

1 Device name and serial number
   - **Origo10A** = model for 3-wire analog outputs (current or voltage) and/or Modbus/ BACnet, optional relay output
   - **Origo10L** = model for 2-wire loop-powered analog outputs

   Devices (probes and modules) connected to the transmitter are additionally identified by the source icon (A, B, M1, M2, M3) shown on the transmitter display.
2 Select ⚙ to access Insight main menu for the chosen device. The transmitter and each connected device has its own main menu. The contents depend on the device type.
   - **Configure device**: display and graph options, output and relay settings (if applicable), parameter and unit selection, passcode settings, and general settings of the device.
   - **Export settings**: creates a text file export of the device settings.
   - **Calibrate**: options for calibrating and adjusting the measurements, adjusting outputs, viewing adjustment data, and restoring factory adjustments.
   - Various reset, factory default settings, and restart options for the device. Options for locking the transmitter's and connected devices' configuration and removing the passcode from use.
   - **About device**: general device information such as serial number and software version.
3 Select **Settings** to switch between the **Basic mode** and **Advanced mode** user modes, change the units of parameters (metric/non-metric), enter a factory code to access restricted functionalities, or view information about the Insight software.
4 **Monitoring** provides options for monitoring and recording selected parameters, and exporting the monitoring data as a CSV (comma-separated values) file.

5 Device information menus. Each connected device has its own menu identified by the source icon (A, B, M1, M2, M3). The menus include the following tabs, depending on the device type:
   - **Measurements**: measurement graph view with parameter drop-down selection.
   - **Calibration information**: read-only information about the latest stored calibration.
   - **Diagnostics**: troubleshooting and administrative information about the device status. Also includes options for exporting the device error log and other diagnostics information as files (CSV/ZIP). When contacting Vaisala support, it is recommended to include an up-to-date export of the error log with the support request.

4.2.1 Insight software user modes

You can switch between the **Basic mode** and **Advanced mode** user modes in the **Settings** menu.

Depending on the connected device, switching to **Advanced mode** may provide access to additional configuration options. Use these options only as described in the product documentation or as instructed by Vaisala support.

4.3 Connecting to Insight PC software

- Computer with a Microsoft Windows® operating system (64-bit version) and Vaisala Insight PC Software installed
- USB-C cable

NOTICE! The service port connection is only intended for temporary use during configuration, and must not be used for permanent installations.

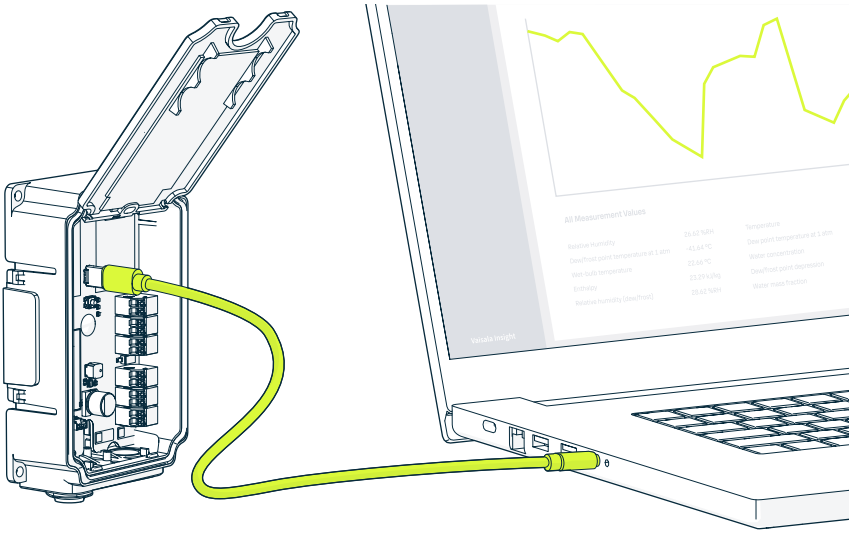

Figure 38 Connecting Origo10 transmitter to Insight PC software

1. Open the transmitter cover.
2. If you have a transmitter with a display, open the display panel to access the transmitter component board.
3. Connect the USB cable to the service port of the transmitter.
4. Connect the USB cable to a free USB port on the computer.
5. Open the Insight software on your computer.
6. Wait for the Insight software to detect the transmitter.

4.4 Setting transmitter passcode

To improve security, you can set a passcode for the transmitter. When a passcode has been set, the user is required to give the passcode to make changes to the transmitter's and the connected devices' settings with Insight. You can remove the passcode from use any time.

When a passcode has been set, it is required for modifying settings in the **Configure device**, **Calibrate**, and **Diagnostics** menus in Insight. Viewing these menus and measurements is still allowed.

The passcode timeout is 1 minute, meaning that if the user does not make any changes to any of the devices' settings for 1 minute, the configuration is locked and the user is required to give the passcode again.

Passcode requirements:

- At least 8 characters long
- No repetitive or sequential characters
- No most common dictionary words

1. Connect the transmitter to the Insight software.
2. Select ⚙ and open the **Configure device** menu.
3. To set a passcode for the first time:
   a. Select **Set passcode**.
   b. In **Passcode**, type the chosen passcode.
   c. Select **Save**.

4. Insight displays a message about the device configuration being locked. To unlock the configuration:
   a. Select **General**.
   b. In **Passcode**, type the current passcode.
   c. Select **Save**.

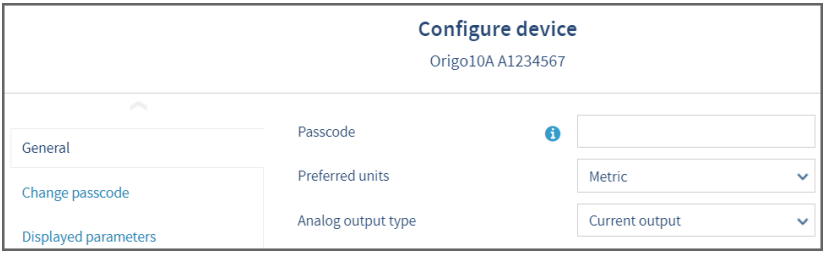

5. To change an existing passcode, select **Change passcode**, and fill in the following fields:
   a. **Current passcode**
   b. **New passcode**
   c. Select **Save**.

   Insight reloads the transmitter and its subdevices.

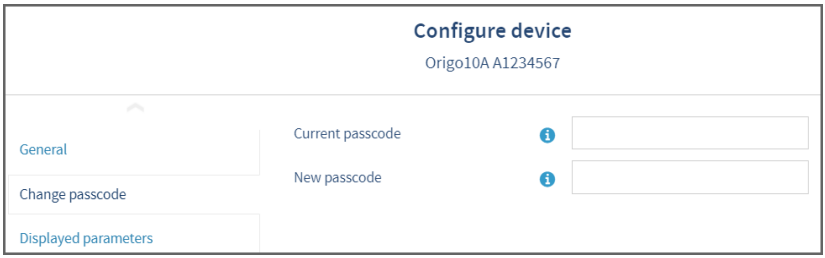

Record the passcode in a safe location for safe-keeping. If the passcode is forgotten, you can clear it by restoring the transmitter's factory default settings using the **mode** button on the transmitter component board. You can also contact Vaisala Technical Support.

4.5 Unlocking configuration with transmitter passcode

1. Connect the transmitter to the Insight software.
2. Select ⚙ and open the **Configure device** menu.
3. Type the passcode in **General > Passcode**, and then select **Save**.

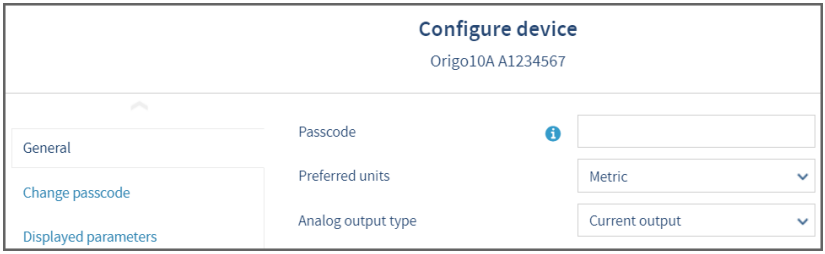

You can now modify the transmitter's and connected devices' configuration in Insight.

4.6 Removing transmitter passcode

1. Connect the transmitter to the Insight software.
2. Select ⚙ and open the **Configure device** menu.
3. Type the current passcode in **General > Passcode**, and then select **Save** to unlock the device configuration.
4. Select **Cancel** to return to the main menu.
5. Open the main menu of your transmitter by selecting ⚙, and then select **Remove passcode > Yes**.

   Insight reloads the transmitter and its subdevices.

5. Configuring Modbus and BACnet communication

5.1 Modbus and BACnet overview

Transmitters with the Origo10A configuration can be ordered with Modbus RTU or BACnet connectivity. The protocol type can be changed via the Insight PC software.

Use the Insight PC software to change the communication settings of your chosen protocol, if needed.

5.2 Configuring Modbus with Insight

You can configure the following Modbus settings with Insight:

- **Address**
- **Bit rate**
- **Parity, data, stop bits**
- **Minimum response delay**

See the instructions in the Insight interface for allowed ranges and additional information.

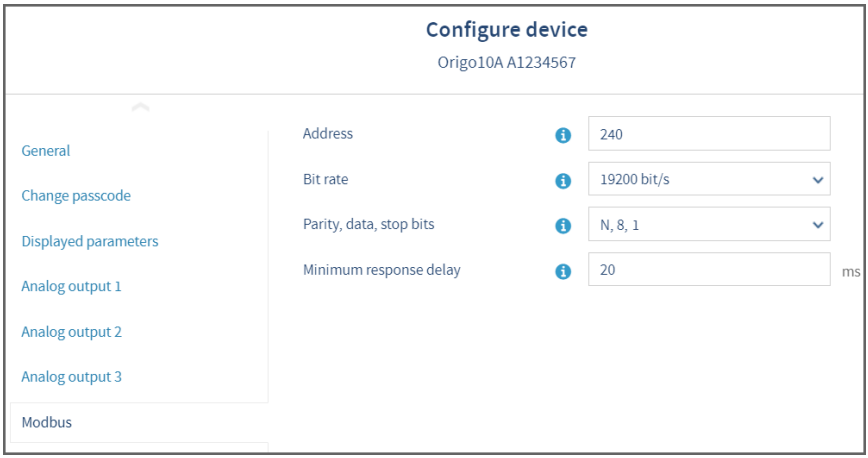

Figure 39 Modbus RTU default settings in Insight

1. Connect the transmitter to the Insight software.
2. Select ⚙ and open the **Configure device** menu of the transmitter.

3. If a device passcode for Insight is in use, type the passcode in **General > Passcode**, and then select **Save** to unlock the device configuration.
4. In **General > Modbus RTU**, enter the values for Modbus settings as necessary: see the instructions in the Insight interface for allowed ranges and additional information.
5. Select **Save**.

5.3 Configuring BACnet with Insight

You can configure the following BACnet settings with Insight:

- **Address**
- **Bit rate**
- **Max_Master**
- **Device object identifier**
- **Device object name**
- **Device location**
- **Description**
- **Remote management password**

See the instructions in the Insight interface for allowed ranges and additional information.

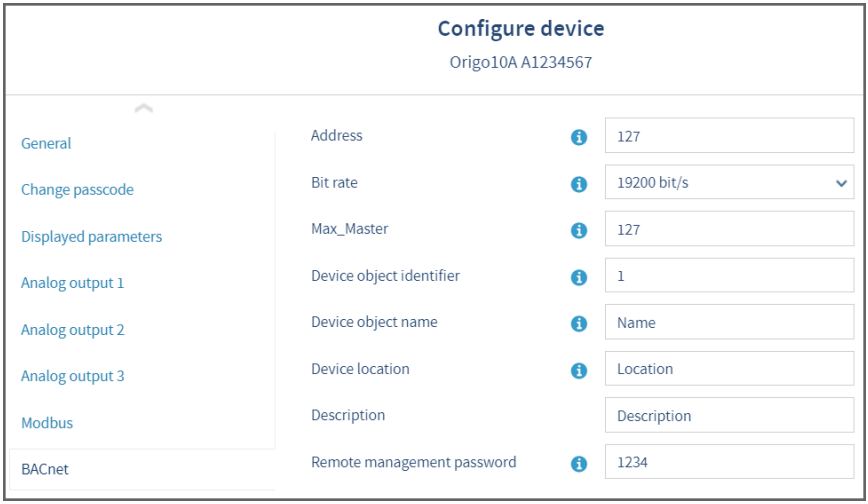

Figure 40 BACnet default settings in Insight

1. Connect the transmitter to the Insight software.
2. Select ⚙ and open the **Configure device** menu of the transmitter.
3. If a device passcode for Insight is in use, type the passcode in **General > Passcode**, and then select **Save** to unlock the device configuration.

4. In **General > BACnet**, enter the values for BACnet settings as necessary: see the instructions in the Insight interface for allowed ranges and additional information.
5. Select **Save**.

6. Configuring analog outputs

6.1 Analog output configuration overview

The analog outputs of the transmitter can be configured with the Insight PC software. Each output has the same set of configuration options under the **Configure device** menu (**Analog output 1** shown in example).

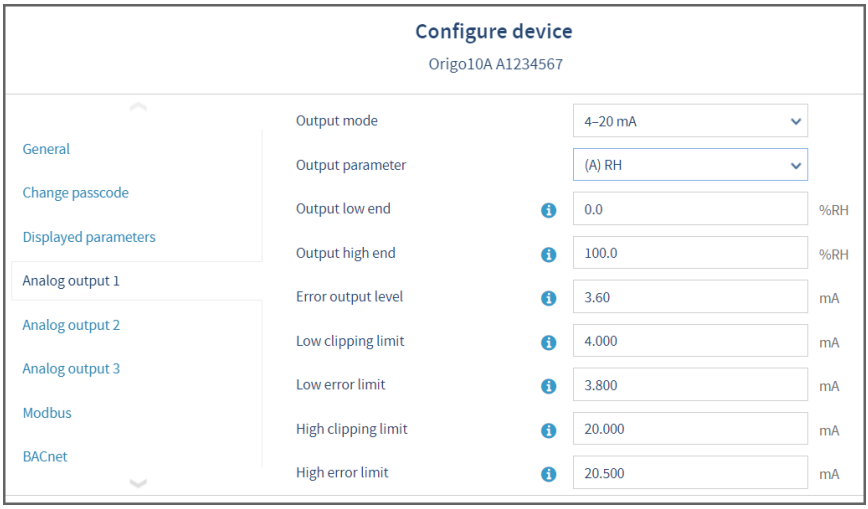

Figure 41 Analog output configuration options example in Insight

> After connecting a measurement device, it is recommended to always review the analog output settings with the Insight PC software.

The **Analog output type** selection in the **General** menu defines whether the outputs are used for voltage or current output. When you change the output type, Insight reloads the transmitter.

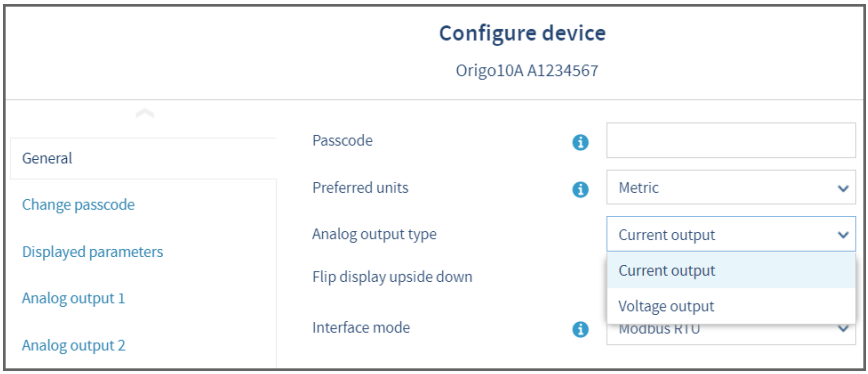

Figure 42 Analog output type (current or voltage) selection in Insight

6.2 Analog output configuration example

This example shows how to use Insight to configure analog output 1 of the transmitter to use the following settings when a humidity and temperature probe is connected to the transmitter:

- 4–20 mA current output
- Relative humidity measurement scaled to 0–100 %RH

1. Connect the transmitter to the Insight software.
2. Select ⚙ and open the **Configure device** menu.
3. If a device passcode for Insight is in use, type the passcode in **General > Passcode**, and then select **Save** to unlock the device configuration.
4. Open the **General** menu and select **Current output** from the dropdown. Store your selection with **Save**.
5. Return to the **Configure device** menu and select one of the analog outputs.
6. Select **4 ... 20 mA** from the **Output mode** dropdown.
7. Select **RH** from the **Output parameter** dropdown.
8. Type **0** in the **Output low end** field.
9. Type **100** in the **Output high end** field.
10. Type **3.6** in the **Error output level** field.
11. Type **4.0** in the **Low clipping limit** field and **3.8** in the **Low error limit** field.
12. Type **20** in the **High clipping limit** field and **20.5** in the **High error limit** field.
13. Select **Save** to take your configuration into use.

6.3 Analog output overrange behavior

The analog output has a defined behavior when the measured values are outside the scaled analog output range. At first, the output is clipped when the measurement exceeds a set limit (the measurement continues, but the output does not change from the clipped value).

When the measurement exceeds the second limit (error limit), the analog output switches to the error state defined for the output.

The same clipping and error limits are applied when the measured value drops back to the scaled range: at first the output returns to the clipped value from the error state, and then to normal output.

6.3.1 Analog output overrange example

This example describes the analog output overrange behavior when an output uses a range of 0–5 V, scaled to 0–200 000 ppm (= 0–20 %) CO_2. The error output level is set to 6 V, clipping limit is set to 5 % overrange, and error limit is set to 10 % overrange. CO_2 concentrations (ppm) are indicated for the clipping point and error limit point.

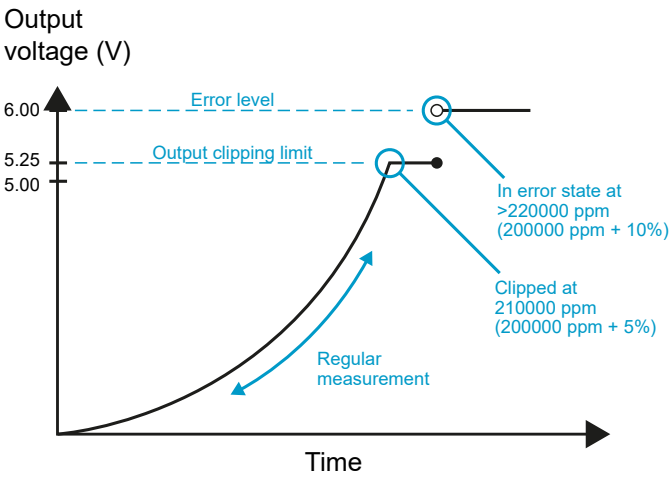

Figure 43 Analog output overrange behavior example

- When the measured CO_2 rises above 20 %, the output rises above 5 V.
- The output keeps rising until the measurement is 21 %CO_2, at which point the probe outputs 5.25 V.
- If the CO_2 level rises above 21 %CO_2, the output still remains at 5.25 V.
- If the CO_2 level rises above 22 %CO_2, the output enters the error state, which is 6 V for the 0–5 V output.

7. Configuring relays

7.1 Relay configuration overview

Origo10A transmitters can have up to 3 configurable relay modules (M1...M3) installed on the transmitter component board. All relays have configuration options for selecting the parameter that is used to control the relay, activation triggers, delays, hysteresis, and error state behavior.

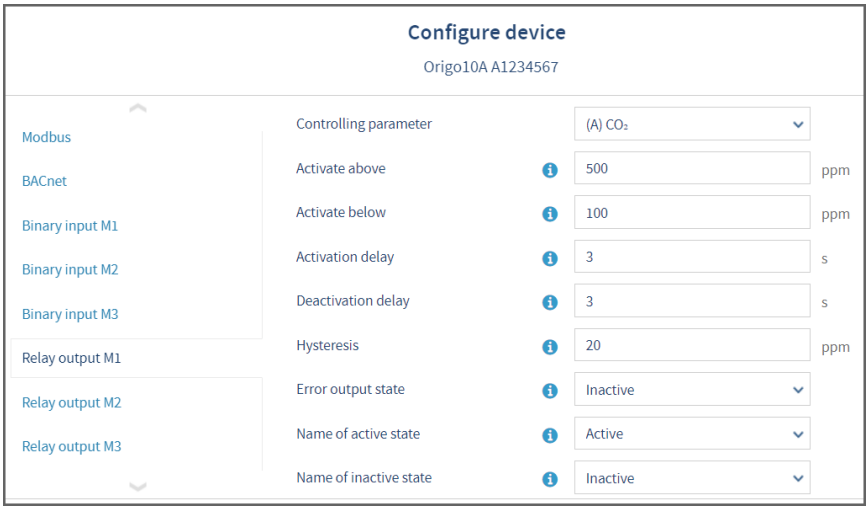

Figure 44 Relay configuration options (CO_2 probe example) in Insight

Controlling parameter

The parameter that is used to control the relay. Options vary based on the type of the connected device.

> When the controlling parameter is **Bin** (binary input), the **Activate above**, **Activate below**, and **Hysteresis** fields are disabled.

Activate above

When the measurement value exceeds the value set here, the relay activates.
See the different relay activation options described in relay activation and hysteresis examples.

Activate below
When the measurement value falls below the value set here, the relay activates. See the different relay activation options described in relay activation and hysteresis examples.

Activation delay
Define how long the condition needs to be true before the relay is activated.

Deactivation delay
Define how long the condition needs to be false before the relay is deactivated.

Hysteresis
Define a buffer value for relay deactivation (set the value according to the parameter selected for the relay). With hysteresis, an activated relay switches off only when the measured value crosses the relay activation/deactivation limit and the additional buffer value.

Error output state
Select which state the relay is set to when an error occurs (active, inactive, or remains in its current state).

Name of active state
Define how the transmitter display shows the relay value when the relay is active. For example, open/closed, on/off, active/inactive.

Name of inactive state
Define how the transmitter display shows the relay value when the relay is inactive. For example, open/closed, on/off, active/inactive.

7.2 Relay activation options

Note that the values given must match the parameter and unit selections.

You can configure relay activation and deactivation to happen either when the measurement passes a single setpoint, or also when the measurement is within or outside a set range. The following options are available:

- The relay activates when the measurement rises above or falls below a single setpoint, and deactivates when the measurement returns to the other side of the setpoint value.
- When you set a higher value for **Activate above** and a lower value for **Activate below**, the relay is **passive** when the measured value is in between the setpoints.
- When you set a lower value for **Activate above** than for **Activate below**, the relay is **active** when the measured value is in between the setpoints.

Note that the hysteresis configuration has an effect on relay activation and deactivation.

7.3 Relay hysteresis

If the measurement you are using to control the relay is likely to move back and forth close to the activation setpoint, you can set a hysteresis that prevents the relay switching on and off too frequently.

When hysteresis is used, the relay activates at the defined limit, but does not switch off immediately when the measurement moves back to the other side of the activation limit. Instead, with hysteresis, the relay remains active until the measurement crosses the relay activation/deactivation limit and the additional buffer value.

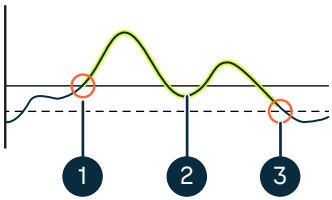

Figure 45 Behavior of relay that activates above limit, with hysteresis

1. Measurement goes above the relay activation limit (solid line —) and the relay activates.
2. Measurement falls below the activation limit, but stays above the hysteresis limit (dashed line - - -). The relay remains active.
3. Measurement falls below the hysteresis limit and the relay switches off.

7.4 Relay activation and hysteresis examples

The following figure shows examples of different relay setpoint options, ranging from only one setpoint to different combinations of "above" and "below" setpoints. The effect of hysteresis is also described in the examples.

Mode 1:
Only "above" setpoint set.
Relay is **active** when value is above the setpoint.

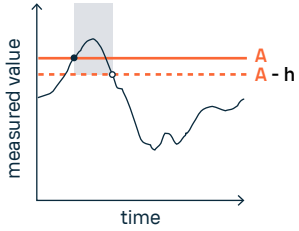

Mode 2:
Only "below" setpoint set.
Relay is **active** when value is below the setpoint.

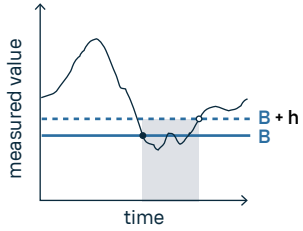

Mode 3:
Both setpoints set "above" > "below".
Relay is **active** when value is outside the setpoints.

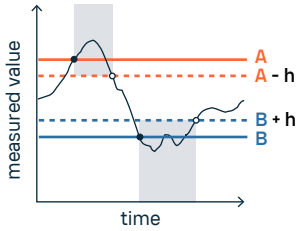

Mode 4:
Both setpoints set "above" < "below".
Relay is **released** when value is outside the setpoints.

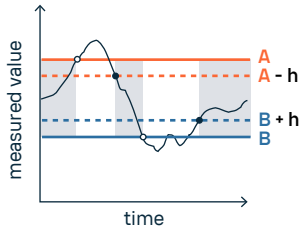

A	"Active above" setpoint value		Relay is active
B	"Active below" setpoint value	•	Relay is activated
h	Hysteresis value	∘	Relay is released

Figure 46 Relay activation and hysteresis examples

The following figure shows an example of using the activation and deactivation delays for the relay.

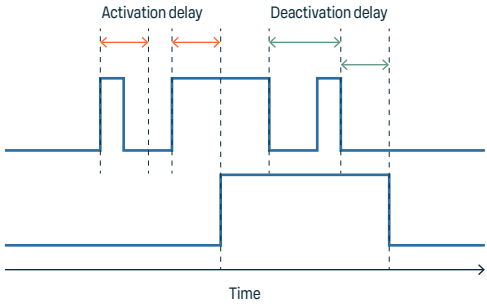

Figure 47 Relay activation and deactivation delay example

7.5 Setting relay activation limit without hysteresis

You can set the relay to activate when the measurement exceeds or falls below a set limit. When you configure a single setpoint for relay activation without hysteresis, the relay switches on or off immediately when the measurement moves over or below the setpoint.

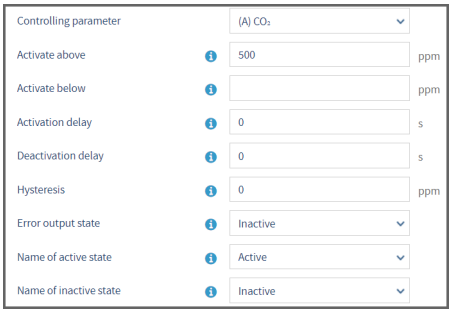

Figure 48 Relay settings example: one setpoint without hysteresis

To define a single setpoint for relay activation when the measurement exceeds the defined activation limit (**Activate above**) without using hysteresis:

1. Connect the transmitter to the Insight software.
2. Select ⚙ and open the **Configure device** menu of the transmitter.
3. If a device passcode for Insight is in use, type the passcode in **General > Passcode**, and then select **Save** to unlock the device configuration.

4. Select **Relay output M1**.
5. Select the measurement parameter that is used to control the relay with the **Controlling parameter** dropdown.

   The parameter units are defined in the **Settings** menu.
6. Enter the activation limit value in the **Activate above** field.

> With this configuration, there is no hysteresis buffer. The relay activates or switches off immediately after passing this point.

7. Leave the **Activate below** empty, and set the **Activation delay**, **Deactivation delay** and **Hysteresis** field values as **0** (no delays and no hysteresis).
8. Select the **Error output state**, **Name of active state** and **Name of inactive state** for the relay.
9. Select **Save** to store the configuration.

7.6 Setting relay activation limit using hysteresis

If the measurement you are using to control the relay is likely to move back and forth close to the activation setpoint, you can set a hysteresis that prevents the relay switching on and off too frequently.

When hysteresis is used, the relay activates at the defined limit, but does not switch off immediately when the measurement moves back to the other side of the activation limit. Instead, with hysteresis, the relay remains active until the measurement reaches the defined tolerated variation limit.

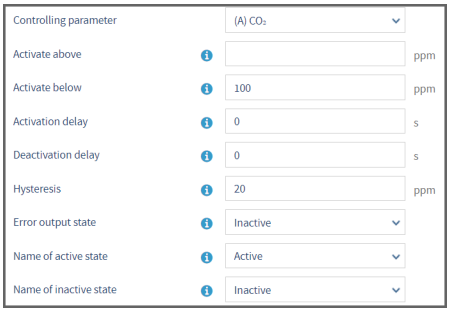

Figure 49 Relay settings example: one setpoint with hysteresis

To define a single setpoint for relay activation when the measurement falls below the defined activation limit (**Activate below**) using hysteresis:

1. Connect the transmitter to the Insight software.
2. Select ⚙ and open the **Configure device** menu of the transmitter.
3. If a device passcode for Insight is in use, type the passcode in **General > Passcode**, and then select **Save** to unlock the device configuration.
4. Select **Relay output M1**.
5. Select the measurement parameter that is used to control the relay with the **Controlling parameter** dropdown.

   The parameter units are defined in the **Settings** menu.
6. Enter the activation limit value in the **Activate below** field.
7. Leave the **Activate above** empty, and set **Activation delay** and **Deactivation delay** field values to **0** (no delays).
8. Enter the hysteresis value in the **Hysteresis** field.
9. Select the **Error output state**, **Name of active state** and **Name of inactive state** for the relay.
10. Select **Save** to store the configuration.

    With this configuration, the relay activates when measurement falls below the value entered in the **Activate below** field (100 ppm in this example). When the measurement returns above the **Activate below** limit, the relay does not switch off until it has reached the combined value of the activation limit and hysteresis buffer (120 ppm in this example).

8. Configuring binary inputs

8.1 Binary input configuration overview

The binary inputs of the DIO relay output module and TMM10 temperature measurement module can be configured with the Insight PC software. The number of binary inputs available depend on the number of modules (M1...M3) installed on the transmitter component board.

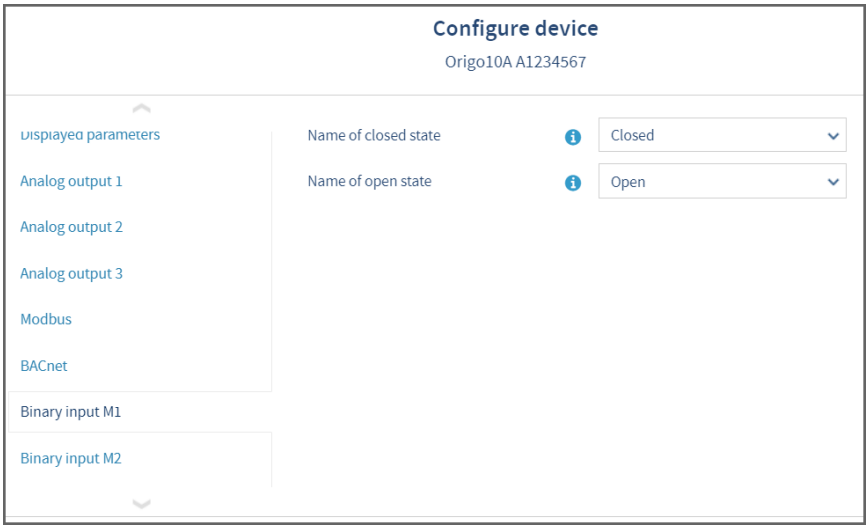

Figure 50 Binary input configuration options in Insight

Name of open state
Select how the transmitter display shows the output state when the loop is open. For example, open/closed, on/off, active/inactive.

Name of closed state
Select how the transmitter display shows the output state when the loop is closed. For example, open/closed, on/off, active/inactive.

8.2 Configuring binary input for transmitter display

You can configure the binary input of the DIO10 relay output module or the TMM10 temperature measurement module to be shown on the transmitter display.

1. Connect the transmitter to the Insight software.

2. Select ⚙ and open the **Configure device** menu of the transmitter.
3. If a device passcode for Insight is in use, type the passcode in **General > Passcode**, and then select **Save** to unlock the device configuration.
4. In **General > Display parameter 1...4**, select **Bin** of the applicable module (M1, M2, or M3).
5. In **Binary input M1...M3 > Name of open state**, select what to show on the transmitter display when the loop is open.
6. In **Binary input M1...M3 > Name of closed state**, select what to show on the transmitter display when the loop is closed.
7. Select **Save**.
8. Select **Restart device** to apply the settings.

8.3 Configuring binary input as relay input

You can configure the binary input of the DIO10 relay output module as an input for the relay. When the loop is closed, the relay activates.

1. Connect the transmitter to the Insight software.
2. Select ⚙ and open the **Configure device** menu of the transmitter.
3. If a device passcode for Insight is in use, type the passcode in **General > Passcode**, and then select **Save** to unlock the device configuration.
4. In **Relay output M1...M3 > Controlling parameter**, select **Bin** of the applicable module (M1, M2, or M3).
5. Select **Save**.

9. Calibration and adjustment

9.1 Calibration and adjustment overview

Calibration means comparing the measurement output of the device to a known reference, such as a known environment in a calibration chamber or the output of a reference instrument. Correcting the reading of the device so that it measures accurately is referred to as **adjustment**.

The probes used in the transmitter are fully interchangeable. All measurement-related calibration data is located and stored in the probe, and thus, only the probe needs to be calibrated. You can easily remove the probe and replace it with a new one without having to adjust the transmitter.

Vaisala recommends sending the probe connected to the transmitter regularly to Vaisala for factory calibration. The probe is calibrated and adjusted at multiple points along its measurement range. Factory calibration always includes a traceable calibration certificate and adjustment, if needed. You can also send the transmitter to Vaisala for calibrating and adjusting the transmitter's analog output channels.

Factory calibration leads to highest accuracy and lowest uncertainty. After factory calibration the instrument performs as new. For up-to-date information about calibration points and offering, visit store.vaisala.com.

WARNING! Chemical hazard
Devices removed from process may have been contaminated, which can cause injury to the persons handling them. When returning a device for calibration or repair, make sure you send only devices that are safe to handle without special precautions.

It is also possible to adjust the probe and the transmitter's analog output channels on the field using the Insight software.

If you think the device is not measuring correctly, calibration and adjustment is not the first thing to do. Check the following first:

- Make sure that the location for the probe represents well the area of interest, and nothing is interfering with the measurement: heat sources, temperature differences, or condensation.
- Check that there is no moisture on the probe. If the sensor has become wet, wait for it to dry.
- Always wait for the measurement to stabilize.

9.2 Calibration and adjustment with Insight PC software

Each device connected to the transmitter has a calibration menu in the Insight PC software for calibrating and adjusting the measurement. In addition, the transmitter has a calibration menu for testing and adjusting the analog output channels of the transmitter (if available in your transmitter model). You can also view the current adjustment and restore the devices' factory adjustments.

> The range of available options (for example, the number of adjustment points) varies depending on the features of the connected device.

> Before adjusting a device's measurement, make sure that you have familiarized yourself with the device-specific calibration requirements such as possible adjustment limits and environmental compensation interdependencies. See the user documentation of the device for device-specific information.

Starting calibration

Unlock the device configuration in ⚙ **> Configure device > General > Passcode**.

Select ⚙ to access Insight main menu of the chosen device. In the main menu, select **Calibrate**.

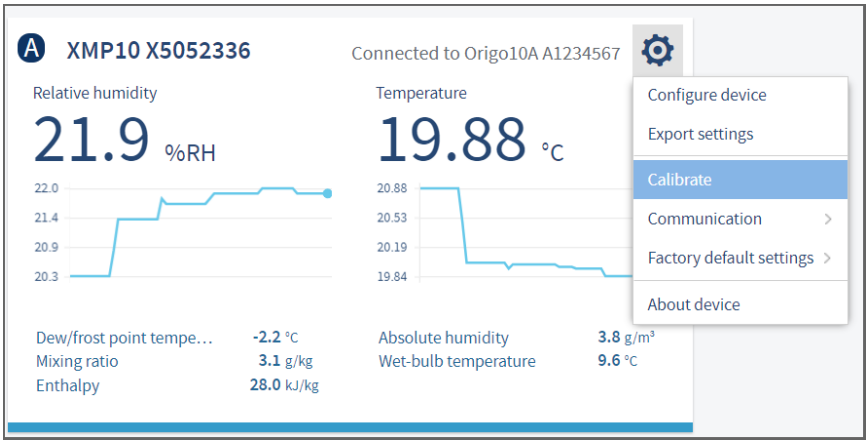

Figure 51 Insight **Calibrate** menu selection, humidity and temperature probe example

Restoring factory adjustment

Before adjusting the measurement, you can remove any possible earlier adjustments of the device with the **Restore factory adjustment** selection, if needed.

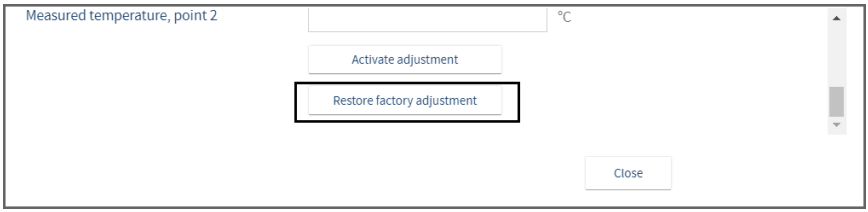

Figure 52 Insight **Restore factory adjustment** selection

9.2.1 Relative humidity probe adjustment example

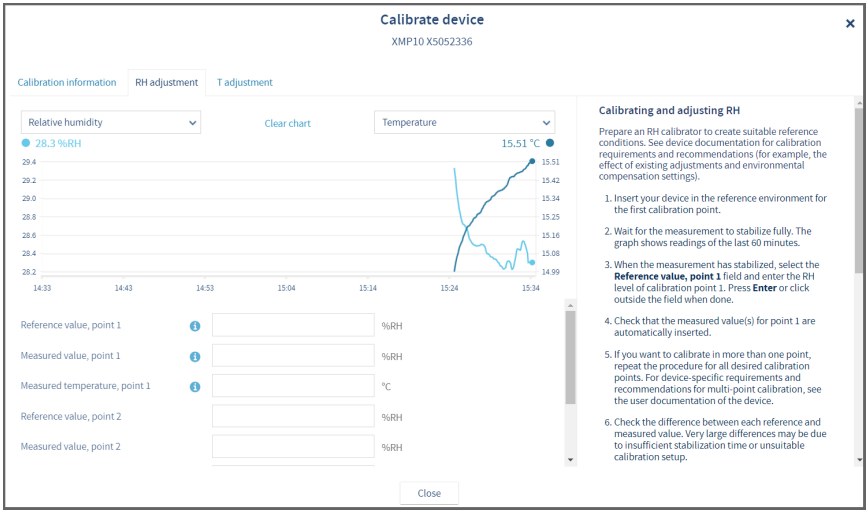

Figure 53 Insight calibration menu main view (humidity and temperature probe)

To adjust the humidity measurement of a probe connected to the transmitter, for example, an XMP10 humidity and temperature probe:

1. Connect the transmitter to the Insight software.
2. Select ⚙ and open the **Configure device** menu of the transmitter.
3. If a device passcode for Insight is in use, type the passcode in **General > Passcode**, and then select **Save** to unlock the device configuration.

4. Select ⚙ and open the **Calibrate** menu of the probe.
5. Select **RH adjustment**.
6. Insert the probe in the reference environment for the first calibration point.
7. Wait for the measurement to stabilize fully. The graph shows readings of the last 60 minutes.
8. When the measurement has stabilized, click the **Reference value, point 1** text box and enter the RH level of calibration point 1. Press **Enter** or click outside the text box when done.
9. Check that the measured value for point 1 is automatically inserted.
10. If you want to calibrate in more than one point, repeat the procedure for all desired calibration points.
11. Check the difference between each reference and measured value. Very large differences may be due to insufficient stabilization time or unsuitable calibration setup.

    If you want to adjust the device, select **Activate adjustment**.
    To exit without taking the adjustment in use, select **Close**.
12. After calibrating your device, update the information in the **Calibration information** tab.

9.2.2 Analog output adjustment

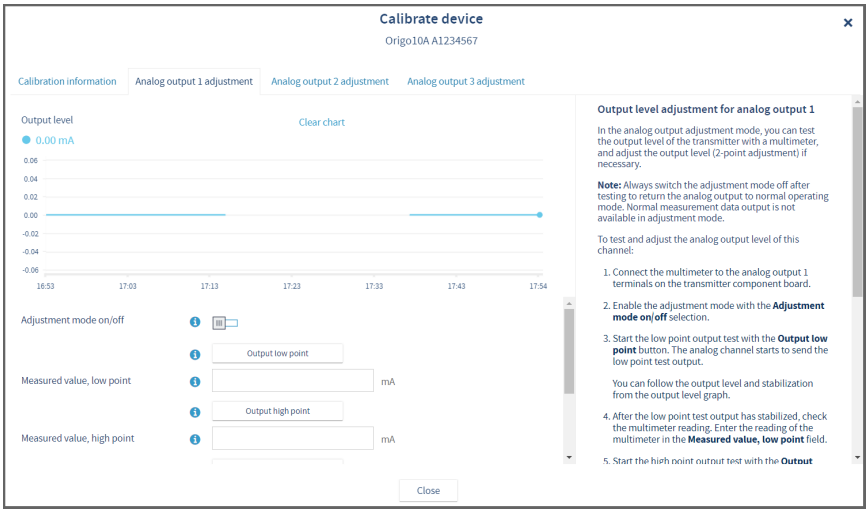

Figure 54 Insight analog output adjustment view

If the analog output appears to be inaccurate, you can test and adjust the output level in the calibration menu of the Insight PC software. Note that each of the 3 analog output channels is adjusted separately. To carry out the adjustment, you need a multimeter (or an alternative method for reading the analog output level) to verify the transmitter test output level.

During the adjustment, the output of the transmitter's analog output channels is forced to a fixed current or voltage level. The adjustment is a 2-point adjustment with a low point test output and a high point test output: the fixed test output levels are listed in the table below.

Table 18 Transmitter analog channel fixed test output levels

Current and voltage test output points	Fixed test output level
Low point test output for current output	4 mA
High point test output for current output	20 mA
Low point test output for voltage output (0–5 V)	0.5 V
High point test output for voltage output (0–5 V)	5 V
Low point test output for voltage output (0–10 V)	1 V
High point test output for voltage output (0–10V)	10 V

NOTICE! Always switch the Insight analog output adjustment mode or test mode off after testing or adjusting to return the output to normal operating mode. Normal measurement data output is not available in the adjustment and test modes.

9.2.2.1 Analog output adjustment example

WARNING! Electricity hazard
Handling energized wires can cause electric shock. Prepare or connect only de-energized wires.

NOTICE! Always switch the Insight analog output adjustment mode or test mode off after testing or adjusting to return the output to normal operating mode. Normal measurement data output is not available in the adjustment and test modes.

To test and adjust the voltage output level of the transmitter's analog output 1 with Insight:

1. Switch off the transmitter power supply and open the transmitter cover.
2. Connect the multimeter wiring to analog output 1 terminals and close the transmitter cover.

3. Power on the transmitter and connect the transmitter to Insight PC software.
4. Select ⚙ and open the **Configure device** menu of the transmitter.
5. If a device passcode for Insight is in use, type the passcode in **General > Passcode**, and then select **Save** to unlock the device configuration.
6. Select ⚙ **> Analog output 1** and check that the analog output 1 is in the on state.
7. Select ⚙ and open the **Calibrate** menu of the transmitter.
8. In**Analog output 1**, enable the adjustment mode with the **Adjustment mode on/off** selection.
9. Start the low point output test with the **Output low point** button. The analog channel starts to send the low point test output (1 V in this example).
10. After the low point test output has stabilized, check the multimeter reading. Enter the reading of the multimeter in the **Measured value, low point** field.
11. Start the high point output test with the **Output high point** button. The analog channel starts to send the high point test output (10 V in this example).
12. After the high point test output has stabilized, check the multimeter reading. Enter the reading of the multimeter in the **Measured value, high point** field.
13. Select **Activate adjustment** to save the corrections to the output level.

    The corrections are shown in the **Low point offset** and **High point offset** fields.
14. To verify that the output level of the transmitter is now accurate, repeat the low point and high point output tests and check that the multimeter reading matches the test output.

    The adjustment date and information about the adjustment can be entered in the **Calibration date** and **Calibration text** fields.
15. Make sure that the adjustment mode is disabled with the **Adjustment mode on/off** selection and select **Close** to exit the calibration mode.
16. Switch off the power supply, remove the multimeter wiring and replace the analog output wiring.
17. After completing the wiring, close the transmitter cover and switch on the power supply.

9.2.2.2 Testing analog output level in Diagnostics view

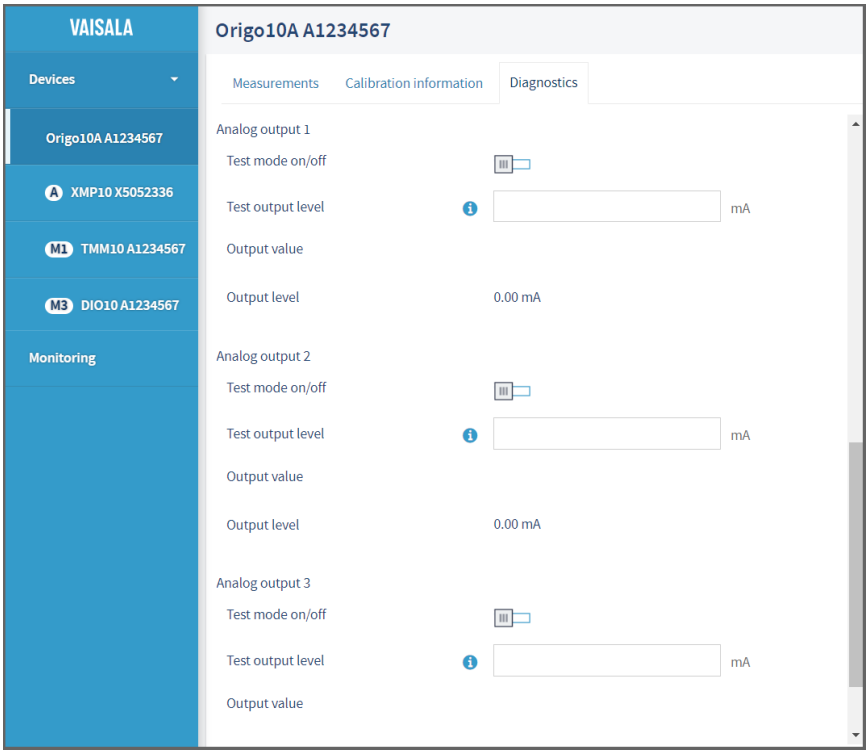

Figure 55 Insight Diagnostics view example with analog output test options

In addition to the analog output level test carried out when calibrating and adjusting the outputs, you can also test the analog output level with any chosen value in the **Diagnostics** view of the Insight PC software. Note that the **Diagnostics** view is only used for testing the output: adjustments must be carried out in the calibration menu.

WARNING! Electricity hazard
Handling energized wires can cause electric shock. Prepare or connect only de-energized wires.

NOTICE! Always switch the Insight analog output adjustment mode or test mode off after testing or adjusting to return the output to normal operating mode. Normal measurement data output is not available in the adjustment and test modes.

1. Switch off the transmitter power supply and open the transmitter cover.
2. Connect the multimeter wiring to the analog output (1–3) terminals.
3. Power on the transmitter and connect the transmitter to Insight PC software.
4. In the Insight main view, expand the **Devices** selection on the left panel, select your device and then select the **Diagnostics** tab.
5. In the **Diagnostics** tab, set the test mode on using the switch.
6. Enter the analog output value you want to send as a test output in the **Test output level** field. Enter a test value for each analog output separately.
7. After entering the test output values, select **Save** to start sending the entered value as test output.
8. Wait for the output to stabilize and then check that the multimeter reading matches the entered test value.
9. If the output appears to be incorrect, adjust the output.
10. When you finish testing, set the test mode off using the switch to return the output back to normal use.
11. Switch off the power supply, remove the multimeter wiring and replace the analog output wiring.
12. After completing the wiring, close the transmitter cover and switch on the power supply.

10. Maintenance and troubleshooting

10.1 Cleaning

You can clean the outer surface of the transmitter enclosure by wiping it with a moist cloth.

In demanding cleanroom environments, remove the transmitter cover and wipe the side grooves on the transmitter base carefully as part of the normal cleaning procedure.

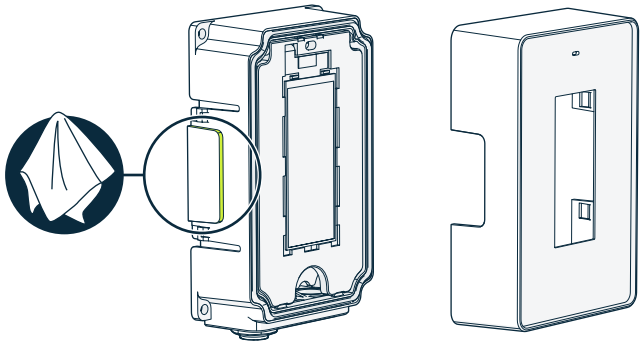

Figure 56 Cleaning side grooves on transmitter base

Table 19 Suitable cleaning agents

Suitable cleaning agent	Notes
50 % hydrogen peroxide	
Peracetic acid	
Ethanol	Recommended for cleanroom environments
IPA (70 % isopropyl alcohol, 30 % water)	

Refer to the probe-specific cleaning instructions when cleaning the probe connected to transmitter. Do not spray anything directly on the probe, since that may deposit impurities on the sensor.

10.2 Restarting transmitter

You can restart the transmitter using the **mode** button inside the transmitter enclosure, or using the Insight PC software.

More information

- Mode button (page 29)

10.2.1 Restarting transmitter (with display)

To restart the transmitter using the **mode** button:

1. Open the transmitter cover.
2. Open the display panel to access the transmitter component board.
3. Press the **mode** button for 8 seconds until you see display message **Restarting device** and the red LED starts blinking, then release the button.

4. The green LED starts blinking when the transmitter is powered up again.

5. Lower down the display panel.
6. Close the transmitter cover.

10.2.2 Restarting transmitter (no display)

To restart the transmitter using the **mode** button:

1. Open the transmitter cover.

2. Press the **mode** button for 8 seconds until the red LED starts blinking, then release the button.

3. The green LED starts blinking when the transmitter is powered up again.

4. Close the transmitter cover.

10.3 Restoring factory settings

You can restore all device settings in the transmitter to the factory default settings, for example, in the following cases:

- You are going to send the transmitter to Vaisala for maintenance.
- You want to modify the device configuration with the Insight PC software, but have forgotten the transmitter passcode.

NOTICE! Restoring factory default settings erases the transmitter's error log, passcode, and all user-modifiable settings.

You can restore the factory settings using the **mode** button inside the transmitter enclosure, or using the Insight PC software.

More information

- Mode button (page 29)

10.3.1 Restoring factory settings (with display)

To restore factory settings using the **mode** button:

1. Open the transmitter cover.
2. Open the display panel to access the transmitter component board.

3. Press the **mode** button continuously, **do not** release the button. The red LED starts blinking and the transmitter restarts. When you see the following display message, then take your finger off the button and press the button once more to confirm the factory reset.

4. The transmitter displays a message about a successful factory reset.
5. Lower down the display panel.
6. Close the transmitter cover.

10.3.2 Restoring factory settings (no display)

To restore factory settings using the **mode** button:

1. Open the transmitter cover.
2. Press the **mode** button continuously, **do not** release the button. The red LED starts blinking and the transmitter restarts. When the red LED starts blinking **for the second time**, then take your finger off the button and press the button once more to confirm factory reset.

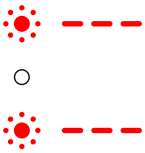

3. The green LED starts blinking when the transmitter is powered up with the factory settings.

4. Close the transmitter cover.

10.4 Updating firmware

You can update the transmitter firmware using the Insight PC software or file transfer.

10.4.1 Updating firmware version with Insight PC software

- Firmware update package (ZIP file) for Origo10
- Computer with Microsoft Windows® operating system (64-bit version) and Insight PC software (version 1.6.0 or later) installed
- USB-C cable for connecting transmitter to computer

Link to the latest Origo10 firmware update package is available on the product page at vaisala.com/origo10.

Updating the transmitter firmware can take up to 5 minutes. Do not disconnect the USB cable during firmware transfer.

1. Make sure you have the latest firmware update package (.zip) available on your computer.

   Do not unzip the package, as Insight will only accept the file in ZIP format.
2. Open the transmitter cover.
3. Open the display panel to access the transmitter component board.
4. Connect the transmitter to the Insight software.
5. Wait for the Insight software to detect the transmitter.
6. Select ⚙ and open **Update firmware**.
7. Select **Browse...** to locate the .zip file. Select the file and select **Open**.
8. Select **Update**.

Firmware update starts. During the update the status LED flashes green with short interval. When the update is ready, the transmitter restarts, during which there is no LED indication. This can take some time.

10.4.2 Updating firmware version with file manager

- Firmware update package (ZIP file) for Origo10
- Computer with Microsoft Windows® operating system (64-bit version)
- USB-C cable for connecting transmitter to computer

Link to the latest Origo10 firmware update package is available on the product page at vaisala.com/origo10.

Updating the transmitter firmware takes approximately 1 minute. Do not disconnect the USB cable during firmware transfer.

Updating the firmware version using macOS or Linux operating system is possible, but may require installing Media Transfer Protocol (MTP) add-on files first. The specific software needed for accessing MTP devices varies depending on your operating system variant. Successful firmware update cannot be guaranteed with other than the Windows operating system.

1. Unzip the firmware update package (.zip) into any folder on your computer.

   The package contains the firmware file and other relevant resource files.
2. Connect the USB cable to a free USB port on the computer.
3. Open the transmitter cover.
4. Open the display panel to access the transmitter component board.
5. Connect the USB cable to the service port of the transmitter.
6. In your computer's file manager application, copy all files from the unzipped firmware package into folder **ORIGO10 (serial number) > Device > Update**.

Firmware update starts. During the update the status LED flashes green with short interval. When the update is ready, the transmitter restarts, during which there is no LED indication. This can take some time.

10.5 Replacing modules

- Crosshead screwdriver (PH1, shaft length 100 mm) for securing the module in place
- Flat head screwdriver 2.5 × 0.5 mm, for the wiring terminals

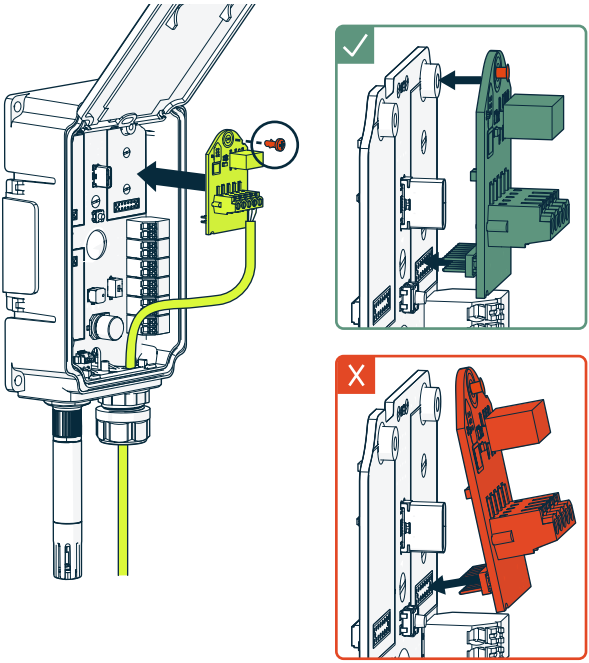

Figure 57 Replacing a module, DIO10 relay output module shown as an example

1. Make sure that the transmitter is powered off.
2. Open the transmitter cover.
3. If you have a transmitter with a display, open the display panel to access the transmitter component board.
4. Locate the applicable module on the transmitter. The module is a small component board connected to the transmitter component board with a connector, and held in place by a red fixing button.
5. Disconnect the terminal wiring from the module.
6. Use a screwdriver to remove the screw button that holds the module in place, then carefully remove the module. Do not pull the module by the terminal block.
7. Connect the wiring to the terminals on the new module.
8. To attach the new module:
   a. Push the module **straight** downward to the applicable module slot. Note the correct orientation of the connector pins.
   b. Secure the connector by pressing down the fixing button.

9. Close the covers (display panel, transmitter cover).
10. Check the output of the transmitter (or the display if included) to verify that the measurement is working normally. If needed, reconfigure the display parameters and output settings using the Insight PC software.

More information

- Analog output configuration overview (page 85)
- Relay configuration overview (page 88)

10.6 Display messages

The following table lists the display messages that the transmitter uses to inform you about its state.

In addition to the transmitter's messages, the connected devices have device-specific messages that are also shown on the display. Messages from the connected device include the source icon and device name, for example:

A XMP10

For more information on the device-specific messages, see your device's user documentation at docs.vaisala.com.

The non-display version of the transmitter uses an LED status indicator to inform you that a message is active. To view the message, connect the transmitter to the Insight PC software.

Table 20 Transmitter messages shown on display

Display message	Description	Recommended action
Errors		
Supply voltage out of range.	The supply voltage is below the minimum (range: 18–30 V DC or 24 V AC ±10 % 50/60 Hz).	The error clears when the supply voltage returns to the specified range. Check your power supply and restart the transmitter if needed.
Analog output out of range.	An analog output has gone out of range.	The error clears when the output returns to range. Check the analog output configuration in the Insight PC software.

Display message	Description	Recommended action
Probe not connected. Check connection.	The probe is not connected, or the probe is connected poorly and cannot be recognized by the transmitter.	Check that you have fastened the probe correctly. You can also acknowledge this error by accepting the following message in Insight: Device (%0) disconnected. Stop searching for the device?
Module not connected. Power off and reconnect module.	The module is not connected, or the module is connected poorly and cannot be recognized by the transmitter.	Check that you have fastened the module correctly. You can also acknowledge this error by accepting the following message in Insight: Device (%0) disconnected. Stop searching for the device?
Cannot read all parameters. Check configuration.	Some of the parameters you have configured to be displayed are currently not available. Possible reasons: You have disconnected the device from the transmitter or replaced it with a different type of device (probe or module).	Configure the display and output parameters for the new device in Insight or reconnect the old device to the transmitter.
Analog output test active.	Test output is being sent from the analog output.	-
Analog output calibration in progress.	The analog output is being calibrated.	-
Notifications		
Example message: New probe connected **Model** XMP10 **Serial number** A1234567	The transmitter displays the model and serial number of the connected device (probe or module) when the device is connected to the transmitter for the first time, or when the device replaces another device.	-
Insight-specific messages		
Configuration is locked.	The user has tried to change the device configuration in Insight without entering the transmitter passcode. This message is only shown in Insight.	Open the **Configure device** menu in the Insight PC software and type the device passcode to **General > Passcode > Save**.

Display message	Description	Recommended action
Configuration is unlocked.	The user has entered the correct passcode in Insight. The device configuration can now be modified. This message is only shown in Insight.	-

More information

- Status icons (page 33)
- LED indicator (page 33)

10.7 Troubleshooting checklist

When troubleshooting, check the questions listed in Technical support (page 123) before contacting Vaisala technical support.

10.7.1 Diagnostics package from Insight

When contacting Vaisala support, it is recommended to include an up-to-date export of the device error log with the support request.

You can export the device error log and other diagnostics information as files (CSV/ZIP) from the **Diagnostics** tab in the Insight PC software.

10.8 Troubleshooting

Problem	Possible cause	Solution
Functionalities are not available in the Insight PC software.	The Insight PC software is in **Basic mode**. Certain functionalities are only available in **Advanced mode**.	Change the user mode from **Basic mode** to **Advanced mode** in the **Settings** menu of the Insight PC software.
Cannot modify the **Configure device** and **Calibrate** menus in the Insight PC software.	Configuration is locked because the user has not entered the transmitter passcode, or the passcode timeout (1 minute) has passed.	Open the **Configure device** menu in the Insight PC software and type the device passcode to **General > Passcode > Save**.
Cannot remove the device password from use in the Insight PC software.	Configuration is locked because the user has not entered the transmitter passcode, or the passcode timeout (1 minute) has passed.	Open the **Configure device** menu in the Insight PC software and type the device passcode to **General > Passcode > Save**.

Problem	Possible cause	Solution
Measurement performance affected after calibration.	Measurement device has not been switched from calibration mode to normal operating mode in the Insight PC software.	Open the **Calibrate** menu in the Insight PC software. Exit the menu with the **Close** selection, and ensure that you confirm closing the calibration mode when exiting with the **Yes** selection.
Analog output appears incorrect.	The analog output channel **Adjustment mode** has not been switched off after adjustment.	Open the analog output adjustment menu in the Insight PC software and switch the adjustment mode off. Note that each of the analog outputs has its own configuration menu.
	The analog output is in error state.	Verify the error state by testing the analog output levels with a multimeter. You can do the test in the **Diagnostics** tab of the Insight PC software. Check the possible error messages in the Insight PC software and remove the cause of the error.
	The wiring of the analog outputs is not correct, or the transmitter is not properly grounded using the **sh/gnd** terminal.	Check the analog output wiring. Also check that the transmitter's **sh/gnd** terminal is connected to the local earth with the shortest possible wiring.
Transmitter display shows a warning saying that calibration has expired.	This warning is displayed by the calibration reminder functionality if the connected measurement device's calibration interval has been exceeded.	Calibrate the measurement device and update the calibration date information.
The connected device's source icon (for example, A or B) is shown on the transmitter display, but no output parameters are shown for the device.	The connected device does not provide the parameters configured to be shown on the display.	Configure the parameters in Insight, or connect a device which provides the parameters already configured for the display.
Insight does not show the connected device(s).	The transmitter and the connected device(s) are powered through the service port, which cannot supply enough power. The service port is for temporary use only.	Check the power connection. Make sure to use a permanent power connection instead of powering the transmitter through the service port.

11. Technical data

11.1 Specifications

Table 21 Origo10-compatible devices

Measurement	Transmitter model	Compatible devices [1]
Humidity and temperature	Origo10L, Origo10A	XMP10 [2], HMP60, HMP63, HMP110, HMP113
Temperature	Origo10L, Origo10A	XMP10, HMP63T, HMP110T, TMP115, TMM10
Carbon dioxide	Origo10A	GMP251, GMP252
Dew point	Origo10A	DMT143
Output		
Relay output + optional binary input	Origo10A	DIO10

1) *See device datasheets at docs.vaisala.com for detailed specifications.*
2) *%RH measurement performance of XMP10 with a plastic probe body may be reduced in environments with strong electromagnetic interference. Once interference is removed, performance returns to normal.*

Table 22 Origo10 operating environment

Property	Description/Value
Operating environment	Indoor use
Operating temperature	−40 ... +60 °C (−40 ... +140 °F) (no display) −20 ... +60 °C (−4 ... +140 °F) (with display)
Operating humidity	0–100 %RH, non-condensing
Pollution degree	Pollution degree 2
IP rating	IP65: Dust-tight. Protected from water jets from any direction.
Maximum operating altitude	2000 m (approx. 6500 ft)
Storage temperature	−40 ... +70 °C (−40 ... +158 °F)
Storage humidity	0–100 %RH, non-condensing

Table 23 Powering, Origo10L

Property	Description/Value
Operating voltage	20–30 V DC with ≤ 500 Ω loop resistance
Nominal voltage	24 V
Overvoltage category	I

Table 24 Powering, Origo10A

Property	Description/Value
Operating voltage	18–30 V DC 24 V AC, ±10 %, 50/60 Hz
Nominal voltage	24 V
Power consumption	Typical: [1] 0.3 W for Origo10A transmitters with XMP10 probe and Modbus or BACnet outputs Maximum: 4 W [2]
Overvoltage category	I

1) *For the power consumption of the connected measurement devices, see the device datasheet at docs.vaisala.com.*
2) *With DMT143*

Table 25 Origo10 digital communication

Property	Description/Value
Interface	RS-485, isolated, line termination [1]
Protocol	Modbus RTU or BACnet MS/TP
Default serial settings	19200 bps N 8 1

1) *RS-485 interface is available for Origo10A devices.*

Table 26 Origo10 analog outputs

Property	Description/Value
Selectable output types	For Origo10L devices: 2 × 4–20 mA (2-wire), loop powered For Origo10A devices: 3 × 4–20 mA (3-wire), 0–5 V, or 0–10 V

Property	Description/Value
External loads	V_{out}: R_L > 10 kΩ I_{out}: R_L < 500 Ω

Table 27 Origo10 relay output / binary input

Property	Description/Value
Relay	DIO10 relay output module + optional binary input [1)]
Relay type	Bistable SPST
Max. switching power	30 W, 1 A, 40 V DC / 28 V AC
Connectors on module	Screw terminals
Wire size	0.5–1.5 mm^2 (20 AWG–15 AWG)
Optional binary input	On/Off

1) *DIO10 relay output module is available for Origo10A devices.*

Table 28 Origo10 compliance

Property	Description/Value
EU directives and regulations	EMC Directive (2014/30/EU) REACH Regulation (EC 1907/2006) RoHS Directive (2011/65/EU) as amended by 2015/863
EMC immunity	IEC/EN 61326-1, industrial environment
EMC emissions	CISPR 11 / EN 55011, Class B FCC part 15 B, Class B ICES-3 / NMB-3 (Class B)
Safety	IEC/EN 62368-1
Compliance marks	CE, China RoHS, RCM, KC [1)]

1) *www.rra.go.kr/selform/rws-ORIGO10*

Table 29 Origo10 mechanical specifications

Property	Description/Value
Enclosure dimensions	130 × 85 × 37 mm (5.12 × 3.35 × 1.46 in)

Property	Description/Value
Enclosure weight (no probes, modules or duct pipe)	Wall model: 250 g (8.82 oz) Duct model: 270 g (9.52 oz)
Connectors on main component boards	Push-in spring terminals
Wire size	0.5–1.5 mm^2 (20 AWG–15 AWG)
Probe interface	4-pin female M8 connector
Service port connection	USB-C connection to Vaisala Insight PC software
Materials	
Enclosure, duct pipe, adapter plate	PC + GF
Display window	PMMA (acrylic)
Enclosure color	RAL 9003 (white)
Material fire rating	V 0

11.2 Dimensions

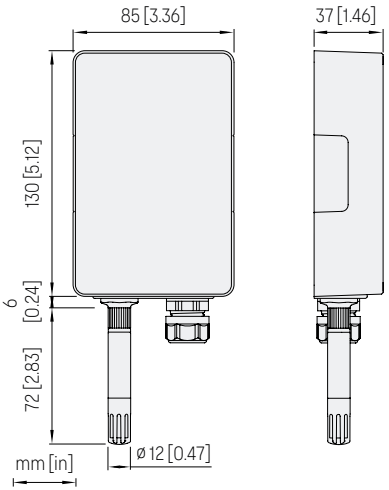

Figure 58 Origo10 dimensions, wall mount

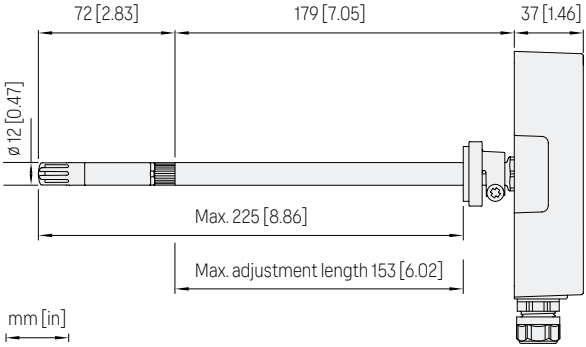

Figure 59 Origo10 dimensions, duct mount

11.3 Spare parts and accessories

Information on spare parts, accessories, and calibration products is available online at vaisala.com and store.vaisala.com.

Table 30 Origo10 spare parts

Description	Item code
Cable gland, M16×1.5, 4.0–11.0 mm (0.16–0.43 in)	284773SP
Cable gland, hygienic for cleanrooms, M16×1.5, 7.0–9.0 mm (0.27–0.35 in)	ASM216275
Conduit fitting NPT1/2″	210675
TMM10 gland with 1 hole	285207SP
TMM10 gland with 2 holes	285206SP
Plugs for unused cable lead-throughs	ASM216492SP
Duct fastening flange	ASM210771SP
Transmitter cover, with display window	DRW261413SP
Transmitter cover, no display window	DRW261414SP
Display panel	ASM216491SP

Table 31 Origo10 accessories

Description	Item code
Adapter plate	ASM216493SP
DIN rail adapter	284769SP
Magnetic bracket	ASM215638SP

Table 32 Probe connection cables

Description	Item code
Probe connection cable (M8-M8), 1.2 m	284313
Probe connection cable (M8-M8), 3 m	284310
Probe connection cable (M8-M8), 5 m	284311
Probe connection cable (M8-M8), 10 m	284312
Probe connection cable (M8-M8), 20 m	284630
Probe connection cable (M8-M12), 1.2 m	279222SP
Flat probe connection cable, M8-M8, 3 m	CBL211292SP
Flat probe connection cable, M8-M12, 3 m	CBL211291SP
High-temperature cable, M8-M8, 1 m [1)]	271039SP
Splitter cable, M8 → M8-M8	284332

1) *High-temperature cables tolerate −20 ... +180 °C (−4 ... +356 °F) temperatures and can remain inside an incubator during a typical heat sterilization cycle. Due to heat conduction, leave half of the cable in ambient temperature when installed.*

Table 33 Selected probe-specific accessories

Description [1)]	Compatible probes	Item code
Duct installation kit	XMP10	ASM216258SP
Radiation shield	XMP10, HMP60 and HMP110 series	DTR504A
Probe mounting clamp	XMP10, HMP60 and HMP110 series	225501SP
Probe holder (5 pcs)	XMP10, HMP60 and HMP110 series	ASM213382SP
Probe mounting flange	XMP10, HMP60 and HMP110 series	226061
Probe mounting flange	GMP251, GMP252	243261SP

Description [1]	Compatible probes	Item code
Probe holder assembly	GMP251, GMP252	ASM213582
Mounting bracket	DMT143	ASM216087SP

1) See probe datasheets at docs.vaisala.com for more accessories.

12. Vaisala services

12.1 Service centers

Vaisala offers comprehensive customer care throughout the life cycle of our products. Our service centers offer maintenance, calibration, upgrade, and repair services. All the services are provided worldwide with fast deliveries. For more information, go to vaisala.com/services.

The services are available from:

- Vaisala Online Store, store.vaisala.com
- Vaisala Services, helpdesk@vaisala.com

The provided services vary product by product.

12.2 Technical support

You can contact Vaisala technical support at vaisala.my.site.com/myvaisala or helpdesk@vaisala.com. You can find all our support channels at vaisala.com/support.

When contacting technical support, provide the following as applicable:

- Product name, model, and serial number
- Software/Firmware version
- Name and location of the installation site
- Name and contact information of a technical person who can provide further information
- Diagnostics package for the application

If applicable, also provide the following details:

- What failed (what worked / did not work)?
- Where did it fail (location and environment)?
- When did it fail (date, immediately / after a while / periodically / randomly)?
- How many failed (only one defect / other same or similar defects / several failures in one unit)?
- What was done when the failure was noticed?
- What was connected to the product and to which connectors?
- What is the input power source type, voltage, and what else (such as lighting, heaters, and motors) was connected to the same power output?
- Are all parts connected and grounded properly? Take a photo to help the troubleshooting.

12.3 Warranty

For warranty terms and conditions and the warranty claim process, see vaisala.com/warranty.

Note that warranty coverage may not apply if the product is damaged due to normal wear and tear, exceptional operating conditions, negligent handling or installation, or unauthorized modifications. See the applicable supply contract or Conditions of Sale for details of the warranty for each product.

Appendix A. Modbus reference

A.1 Default communication settings

Table 34 Default Modbus serial communication settings

Property	Description/Value
Serial bit rate	19200
Parity	None
Number of data bits	8
Number of stop bits	1
Flow control	None
Modbus device address	240

You can use up to 24 transmitters on the same RS-485 line. You must configure each transmitter on the line to have a different Modbus address.

A.2 Function codes

Table 35 Modbus function codes

Function code (decimal)	Function code (hexadecimal)	Name	Notes
03	0x03	Read Holding Registers	Class 0
16	0x10	Write Multiple Registers	Class 0
43 / 14	0x2B / 0x0E	Read Device Identification	

A.3 Data encoding

In the data registers, the numeric values are available in one or two formats with separate register addresses: 32-bit IEEE floating point format and/or 16-bit signed integer format.

A.3.1 32-bit floating point or 32-bit integer format

Registers using **32-bit float** data format are encoded using the **binary32** encoding defined in IEEE 754. The format is also known as "single-precision floating point format".

The least significant 16 bits of a floating point number are placed at the Modbus register listed in the table, while the most significant 16 bits are placed in the register with number/address + 1, as specified in Open Modbus TCP Specification, Release 1.0. This is also known as "little-endian" or "Modicon" word order.

Despite the specification, some Modbus masters may expect a "big-endian" word order (most significant word first). In such case, you must select "word-swapped" floating point format in your Modbus master for the Modbus registers of the device.

A complete 32-bit floating point or 32-bit integer value should be read and written in a single Modbus transaction.

NOTICE! Reading the measurement data registers with incorrect floating point format setting may occasionally result in correct-looking, but nevertheless incorrect values.

It is highly recommended to verify that you have configured the floating point format correctly on your Modbus host system by reading a floating point value from a test value register.

A.3.2 16-bit integer format

Some 16-bit integer values in the data registers are scaled to include the necessary decimals. The scaling factors for those values are shown in the register tables.

Table 36 Interpretation of 16-bit signed integer values

Value (decimal)	Value (hexadecimal)	Description
0–32766	0x0000–0x7FFE	Value in range 0–32766
32767	0x7FFF	Value is 32767 or larger
32768	0x8000	Value is not available
32769	0x8001	Value is −32767 or smaller
32770–65535	0x8002–0xFFFF	Value in range −32766 ... −1 (2's complement)

A.4 Modbus registers

Registers are numbered in decimal, starting from 1. Register addresses in actual Modbus messages (Modbus Protocol Data Unit (PDU)) are in hexadecimal and start from zero. Register number 1 corresponds to address 0x0 in the actual Modbus message.

NOTICE! Reading the wrong register(s) may result in correct-looking values. Check the reference documentation of your Modbus host (PLC) to verify which notation it uses for Modbus register addresses.

A.4.1 Measurement data registers

In the following tables, character '**X**' denotes the subdevice (probe or module) connected to Origo10.

Note that depending on the probe and module configuration, all registers listed below may not be available.

X	Subdevice connected to Origo10
0	Probe A
1	Probe B
2	Module 1
3	Module 2
4	Module 3

Table 37 Probe and module status and information data registers (read-only)

Register number	Address	Description	Data format
1 + **X** * 4096	0x**X**000	Product code	32-character ASCII string
17 + **X** * 4096	0x**X**010	Serial number	32-character ASCII string
33 + **X** * 4096	0x**X**020	Version	32-character ASCII string
49 + **X** * 4096	0x**X**030	Status code	32-bit bitfield: 0x0001: Failure active 0x0002: Error active 0x0004: Warning active 0x0008: Information active 0x0010: Calibration mode active

Register number	Address	Description	Data format
51 + **X** * 4096	0x**X**032	Relay output control	16-bit enumeration: 0 = inactive 1 = active 2 = N/A

Table 38 Probe and module metric measurement data registers (read-only)

Register number	Address	Description	Data format	Unit/Valid range
257 + **X** * 4096	0x**X**100	Relative humidity	32-bit float	%RH
259 + **X** * 4096	0x**X**102	Temperature	32-bit float	°C
261 + **X** * 4096	0x**X**104	Dew point temperature	32-bit float	°C
263 + **X** * 4096	0x**X**106	Dew/frost point temperature	32-bit float	°C
265 + **X** * 4096	0x**X**108	Absolute humidity	32-bit float	g/m3
267 + **X** * 4096	0x**X**10A	Mixing ratio	32-bit float	g/kg
269 + **X** * 4096	0x**X**10C	Wet-bulb temperature	32-bit float	°C
271 + **X** * 4096	0x**X**10E	Water vapor pressure	32-bit float	hPa
273 + **X** * 4096	0x**X**110	Water vapor saturation pressure	32-bit float	hPa
275 + **X** * 4096	0x**X**112	Enthalpy	32-bit float	kJ/kg
277 + **X** * 4096	0x**X**114	Carbon dioxide concentration ppm	32-bit float	ppm
279 + **X** * 4096	0x**X**116	Carbon dioxide concentration %	32-bit float	%
281 + **X** * 4096	0x**X**118	Binary input	16-bit enumeration	0 = loop open 1 = loop closed 2 = N/A
283 + **X** * 4096	0x**X**11A	Relay output	16-bit enumeration	0 = inactive 1 = active 2 = N/A

Table 39 Probe and module non-metric measurement data registers (read-only)

Register number	Address	Description	Data format	Unit/Valid range
513 +**X** * 4096	0x**X**200	Relative humidity	32-bit float	%RH
515 +**X** * 4096	0x**X**202	Temperature	32-bit float	°F
517 +**X** * 4096	0x**X**204	Dew point temperature	32-bit float	°F
519 +**X** * 4096	0x**X**206	Dew/frost point temperature	32-bit float	°F
521 +**X** * 4096	0x**X**208	Absolute humidity	32-bit float	gr/ft3
523 +**X** * 4096	0x**X**20A	Mixing ratio	32-bit float	gr/lb
525 +**X** * 4096	0x**X**20C	Wet-bulb temperature	32-bit float	°F
527 +**X** * 4096	0x**X**20E	Water vapor pressure	32-bit float	psi
529 +**X** * 4096	0x**X**210	Water vapor saturation pressure	32-bit float	psi
531 +**X** * 4096	0x**X**212	Enthalpy	32-bit float	BTU/lb
533 +**X** * 4096	0x**X**214	Carbon dioxide concentration ppm	32-bit float	ppm
535 +**X** * 4096	0x**X**216	Carbon dioxide concentration %	32-bit float	%
537 +**X** * 4096	0x**X**218	Binary input	16-bit enumeration	0 = loop open 1 = loop closed 2 = N/A
539 + **X** * 4096	0x**X**21A	Relay output	16-bit enumeration	0 = inactive 1 = active 2 = N/A

Table 40 Probe and module measurement status data registers (read-only)

Register number	Address	Description	Data format	Note
769 + **X** * 4096	0x**X**300	RH measurement status	16-bit bitfield	0x0000: Status OK 0x0001: Measurement is not available 0x0002: Measurement is not reliable 0x0004: Under range 0x0008: Over range 0x0010: Noisy 0x0020: Value locked 0x0040: Calibration expired 0x0080: Sensor failure 0x0100: Measurement is not ready
770 + **X** * 4096	0x**X**301	T measurement status	16-bit bitfield	
771 + **X** * 4096	0x**X**302	T_d measurement status	16-bit bitfield	
772 + **X** * 4096	0x**X**303	$T_{d/f}$ measurement status	16-bit bitfield	
773 + **X** * 4096	0x**X**304	A measurement status	16-bit bitfield	
774 + **X** * 4096	0x**X**305	X measurement status	16-bit bitfield	
775 + **X** * 4096	0x**X**306	T_w measurement status	16-bit bitfield	
776 + **X** * 4096	0x**X**307	P_w measurement status	16-bit bitfield	
777 + **X** * 4096	0x**X**308	P_{ws} measurement status	16-bit bitfield	
778 + **X** * 4096	0x**X**309	H measurement status	16-bit bitfield	
779 + **X** * 4096	0x**X**30A	CO_2 ppm measurement status	16-bit bitfield	
780 + **X** * 4096	0x**X**30B	CO_2 % measurement status	16-bit bitfield	
781 + **X** * 4096	0x**X**30C	Binary input status	16-bit bitfield	
782 + **X** * 4096	0x**X**30D	Relay output status	16-bit bitfield	

Table 41 Probe and module metric integer measurement data registers (read-only)

Register number	Address	Description	Data format	Scale factor	Unit/ Valid range
897 + **X** * 4096	0x**X**380	Relative humidity	16-bit integer	10	%RH
898 + **X** * 4096	0x**X**381	Temperature	16-bit integer	10	°C
899 + **X** * 4096	0x**X**382	Dew point temperature	16-bit integer	10	°C
900 + **X** * 4096	0x**X**383	Dew/frost point temperature	16-bit integer	10	°C

Register number	Address	Description	Data format	Scale factor	Unit/ Valid range
901 + **X** * 4096	0x**X**384	Absolute humidity	16-bit integer	10	g/m3
902 + **X** * 4096	0x**X**385	Mixing ratio	16-bit integer	10	g/kg
903 + **X** * 4096	0x**X**386	Wet-bulb temperature	16-bit integer	10	°C
904 + **X** * 4096	0x**X**387	Water vapor pressure	16-bit integer	10	hPa
905 + **X** * 4096	0x**X**388	Water vapor saturation pressure	16-bit integer	10	hPa
906 + **X** * 4096	0x**X**389	Enthalpy	16-bit integer	10	kJ/kg
907 + **X** * 4096	0x**X**38A	Carbon dioxide concentration ppm	16-bit integer	0.01	ppm
908 + **X** * 4096	0x**X**38B	Carbon dioxide concentration %	16-bit integer	10	%
909 + **X** * 4096	0x**X**38C	Binary input	16-bit enumeration	1	0 = loop open 1 = loop closed 2 = N/A
910 + X * 4096	0x**X**38D	Relay output	16-bit enumeration	1	0 = inactive 1 = active 2 = N/A

A.4.2 Configuration registers

Table 42 Modbus configuration data registers (writable)

Register number	Address	Description	Data format	Unit/Valid range
49665	0xC200	Restart device	16-bit integer	1 = Restart device
51202	0xC801	Address	16-bit integer	Range: 1 ... 247 Default: 240

Register number	Address	Description	Data format	Unit/Valid range
51203	0xC802	Bit rate (b/s)	16-bit enumeration	0 = 300 1 = 600 2 = 1200 3 = 2400 4 = 4800 5 = 9600 6 = 19200 7 = 38400 8 = 57600 9 = 76800 10 = 115200 Default: 6 = 19200
51204	0xC803	Parity, data, stop bits	16-bit enumeration	0 = None, 8, 1 1 = None, 8, 2 2 = Even, 8, 1 3 = Even, 8, 2 4 = Odd, 8, 1 5 = Odd, 8, 2 Default: 0 = None, 8, 1
51205	0xC804	Response delay	16-bit integer	Unit: ms Range: 0 ... 1000 Default: 20

A.4.3 Status registers

Table 43 Transmitter status and information data registers (read-only)

Register number	Address	Description	Data format	Note
49153	0xC000	Status code low	32-bit bitfield	See Table 44 (page 133).
49155	0xC002	Status code high	32-bit bitfield	See Table 45 (page 134).
49157	0xC004	Firmware version	32-character ASCII string	
49173	0xC014	Security hash	32-bit integer	

Register number	Address	Description	Data format	Note
49175	0xC016	Vendor name	16-character ASCII string	
49183	0xC01E	Vendor URL	48-character ASCII string	
49207	0xC036	Product code	16-character ASCII string	
49215	0xC03E	Product name	96-character ASCII string	
49263	0xC06E	Serial number	8-character ASCII string	
49267	0xC072	HW revision	8-character ASCII string	
49271	0xC076	Manufacturing date	date	
49274	0xC079	Manufacturing location	32-character ASCII string	
49290	0xC089	Configuration code	32-character ASCII string	

Table 44 Error codes in register 0xC000

Bitmask	Error message	Severity
0x00000001	Non-volatile memory error read/write failure	Failure
0x00000002	Device settings corrupted	Failure
0x00000004	Factory settings corrupted	Failure
0x00000010	Probe current limit exceeded	Error
0x00000080	Probe type not supported	Error
0x00000100	Module type not supported	Error
0x00000800	Probe missing	Error
0x00001000	Module missing	Error
0x00010000	Cannot read all measurement parameters	Error
0x00020000	Analog output 1 out of range	Error
0x00040000	Analog output 2 out of range	Error
0x00080000	Analog output 3 out of range	Error
0x00100000	Analog output 1 test mode active	Warning

0x00200000	Analog output 2 test mode active	Warning
0x00400000	Analog output 3 test mode active	Warning
0x00800000	Analog output 1 calibration active	Warning
0x01000000	Analog output 2 calibration active	Warning
0x02000000	Analog output 3 calibration active	Warning
0x04000000	Supply voltage out of range	Warning
0x08000000	Probe 1 not detected	Info
0x10000000	Probe 2 not detected	Info
0x20000000	Module 1 not detected	Info
0x40000000	Module 2 not detected	Info
0x80000000	Module 3 not detected	Info

Table 45 Error codes in register 0xC002

Bitmask	Error message	Severity
0x00000001	Restart to apply settings	Info
0x00000002	Configuration locked	Info
0x00000004	Configuration unlocked	Info

A.4.4 Test value registers

Read the known test values from the test registers to verify the functionality of your Modbus implementation.

Table 46 Modbus test registers (read-only)

Register number	Address	Description	Data format	Test value
50950	0xC705	Signed integer	16-bit integer	-12345
50951	0xC706	Floating point	32-bit float	-123.45
50953	0xC708	Text string	7-character ASCII string	Text string "-123.45"

A.5 Device identification objects

Table 47 Device identification objects

Object ID	Object ID (hexadecimal)	Object name	Example contents
0	0x00	VendorName	"Vaisala"
1	0x01	ProductCode	Origo10
2	0x02	MajorMinorVersion	"1.2.3" Software version of the device.
3	0x03	VendorUrl	"http://www.vaisala.com/"
4	0x04	ProductName	Vaisala Origo10 Transmitter
128	0x80	SerialNumber [1)]	"K0710040"
129	0x81	CalibrationDate [1)]	"2025-08-31" Calibration date in YYYY-MM-DD format. Empty string if not set/valid.
130	0x82	CalibrationText [1)]	"Vaisala/HEL" Calibration information text. Empty string if not set/valid.
133	0x85	HardwareVersion	
145	0x91	Probe A ProductCode	
146	0x92	Probe A MajorMinorVersion	
151	0x97	Probe A Symbol	
152	0x98	Probe A HardwareVersion	
160	0xA0	Probe B ProductCode	
161	0xA1	Probe B MajorMinorVersion	
162	0xA2	Probe B Symbol	
163	0xA3	Probe B HardwareVersion	
164	0xA4	Module 1 ProductCode	
165	0xA5	Module 1 MajorMinorVersion	
166	0xA6	Module 1 Symbol	
167	0xA7	Module 1 HardwareVersion	
168	0xA8	Module 2 ProductCode	
169	0xA9	Module 2 MajorMinorVersion	

Object ID	Object ID (hexadecimal)	Object name	Example contents
170	0xAA	Module 2 Symbol	
171	0xAB	Module 2 HardwareVersion	
172	0xAC	Module 3 ProductCode	
173	0xAD	Module 3 MajorMinorVersion	
174	0xAE	Module 3 Symbol	
175	0xAF	Module 3 HardwareVersion	

1) Vaisala-specific device information.

A.6 Exception responses

Table 48 Modbus exception responses

Code	Name	Reason
01	Illegal function	Unsupported function code
02	Illegal data address	Register address or Object ID out of valid ranges
03	Illegal data value	Otherwise invalid request

Accessing unavailable (temporarily missing) measurement data does not generate a Modbus exception. “Unavailable” value (a quiet NaN for floating point data or 0x8000 for integer data) is returned instead. An exception is generated only for any access outside the applicable register ranges.

A.7 Modbus communication examples

Reading relative humidity value from probe A

Device address used in the following examples is 240 (0xF0).
Measurement values returned by the device change depending on ambient conditions and/or device settings.

Request		Response	
Bytes on the line (hexadecimal)	**Description**	**Bytes on the line (hexadecimal)**	**Description**
(silence for 3.5 bytes)	Start of Modbus RTU frame	(silence for 3.5 bytes)	Start of Modbus RTU frame
0xF0	Probe address	0xF0	Probe address
0x03	Function (Read Holding Registers)	0x03	Function (Read Holding Registers)
0x01	Register address	0x04	Number of data bytes
0x00		0xC6	Value of first register (least significant word)
0x00	Number of 16-bit registers to read (2)	0xA9	
0x02		0x42	Value of second register (most significant word)
0xD0	Modbus RTU checksum	0x04	
0xD6		0xC7	Modbus RTU checksum
(silence for 3.5 bytes)	End of Modbus RTU frame	0x37	
		(silence for 3.5 bytes)	End of Modbus RTU frame

Communication description	
Register number	257 (1-based Modbus register number) = address 0x0100 (0-based address used in actual communication).
Data format	Two 16-bit Modbus registers interpreted as IEEE 754 binary32 floating point value, least significant word first.
Returned value	0x4204C6A9, which is binary32 representation of 33.19 (%RH).

Writing Modbus address

Request		Response	
Bytes on the line (hexadecimal)	**Description**	**Bytes on the line (hexadecimal)**	**Description**
(silence for 3.5 bytes)	Start of Modbus RTU frame	(silence for 3.5 bytes)	Start of Modbus RTU frame
0xF0	Transmitter address	0xF0	Transmitter address
0x10	Function (Write Multiple Registers)	0x10	Function (Write Multiple Registers)
0xC8	Register address	0xC8	Register address
0x01		0x01	
0x00	Number of registers to write (2)	0x00	Number of 16-bit registers written (2)
0x01		0x01	
0x02	Number of data bytes	0x78	Modbus RTU checksum
0x00	Value for the register	0x5C	
0x10		(silence for 3.5 bytes)	End of Modbus RTU frame
0x7B	Modbus RTU checksum	The response to a write function informs that the function was correctly received by the device. It does not guarantee that the written value was accepted by the device (for example, in case of out-of-range values). To verify that the value was really accepted by the device, read the register value after writing.	
0x48			
(silence for 3.5 bytes)	End of Modbus RTU frame		

Communication description	
Register number	51202 (1-based Modbus register number) = address 0xC801 (0-based address used in actual communication)
Data format	One 16-bit Modbus registers, most significant byte first.
Value to write	16

Appendix B. BACnet reference

B.1 BACnet implementation

The BACnet standard has many options for both physical and data link layers. The Origo10 transmitter implements the MS/TP Master communication option.

Master mode operation means that the transmitter is part of a token passing loop. Master can send messages to the MS/TP bus when it has received a token. According to BACnet standard, the master address must be in the range 0 ... 127. For correct operation, Master mode also requires that the parameter MAX_MASTER is set. It must be same in every master node connected to the same bus segment. MAX_MASTER defines highest MAC address used by master nodes.

Master functionality enables automatic network setup. The client can send inquiries such as “who has property XYZ” or “who is device number 12345”. The device replies to inquiries when it is available to talk. When the master mode device has no token it behaves as a slave, that is, it replies to requests.

The MS/TP address for MS/TP master is 0 ... 127. The address is selected with the Insight PC software.

B.1.1 Configuration

The fixed serial line parameters are: No parity, 8 Databits and 1 Stop bit.

There are several settable parameters for BACnet communication. If there are several devices on the same BACnet network, the address, bit rate and device object identifier parameters must be set correct before a device is connected to the BACnet network. The initial BACnet configuration of the device is selected when ordering the device, and can be configured using Vaisala Insight PC software or BACnet protocol.

Table 49 BACnet configuration options

Parameter	Vaisala Insight PC Software	BACnet
MAC address	✔	✔
Baud Rate	✔	✔
Max_Master	✔	✔
Device object: Object Identifier	✔	✔
Device object: Object Name	✔	✔
Device object: Location	✔	✔
Device object: Description	✔	✔

Parameter	Vaisala Insight PC Software	BACnet
Reinitialize password	✔	

B.1.2 Physical interface

The physical interface for using the Origo10 transmitter through BACnet is galvanic isolated RS-485. There are weak pull-up and pull-down resistors (100k) from data lines to +3.3VDC and bus gnd. A termination resistor (120 ohm) can be connected between data lines with a DIP switch on the transmitter component board. Three terminals are needed: bus +, bus - and bus gnd.

B.1.3 Protocol services

Services are implemented according to BACnet standard. When there are options or the standard is open for interpretations, Origo10 implementation is explained here.

Table 50 Protocol services implementation notes

Protocol service	Implementation note
Write Property	Reply delay is approximately 225 ms and writing to non-volatile memory may take time close to that.
Device Communication Control	Limited functionality. Due to inaccurate internal clock, does not support Device communication control with finite duration.
Read Property	
Ready Property Multiple	
Reinitialize Device	Restart device (COLDSTART) using initialization password.
SubscribeCOV	
SubscribeCOVProperty	
I Am	
I Have	
Who Has	
Who Is	

B.1.4 Data persistence

Persistence of writable parameter values in BACnet devices is largely a local matter. Nonvolatile parameters are saved in device Flash memory. Volatile parameters are always initialized to some default value at startup. This is defined in each property definition in this appendix. Saving takes effect during the Write Property function.

Table 51 Data persistence classes

Storage class	Meaning
Nonvolatile	Value stored in Flash data area
Volatile	Value stored in RAM, initial value in Flash
Fixed	Value stored in Flash code area

B.1.5 Additions to BACnet Standard

The BACnet standard allows vendor-specific additions. The following additions are specified for Origo10.

Table 52 BACnetEngineeringUnits

Name	Enumeration
grains-per-cubic-foot	2000
grains-of-water-per-pound	2001

B.2 BACnet Protocol Implementation Conformance Statement

This statement is a part of the BACnet standard and is required for its use.

Vendor name:	Vaisala Oyj
Product Name:	Origo10
Application Software Version:	1.1.3
Firmware Version:	1.0.0
BACnet Protocol Revision:	26
BACnet Standardized Device Profile (Annex L):	☐ BACnet Operator Workstation (B-OWS) ☐ BACnet Building Controller (B-BC) ☐ BACnet Advanced Application Controller (B-AAC) ☑ BACnet Application Specific Controller (B-ASC) ☐ BACnet Smart Sensor (B-SS) ☐ BACnet Smart Actuator (B-SA)

List of all BACnet Interoperability Building Blocks Supported (Annex K): See also: BIBBs Supported (page 154)	DS-RP-B, DS-RPM-B, DS-WP-B, DS-COV-B, DM-DDB-B, DM-DOB-B, DM-DCC-B, DM-RD-B
Segmentation Capability:	☐ Segmentation Requests Supported ☐ Segmentation Responses Supported No segmentation.
Standard Object Types Supported	☑ Analog Input ☐ Analog Output ☐ Analog Value ☐ Averaging ☑ Binary Input ☑ Binary Output ☐ Binary Value ☐ Calendar ☐ Command ☑ Device ☐ Event Enrollment ☐ File ☐ Group ☐ Life Safety Point ☐ Life Safety Zone ☐ Loop ☐ Multistate Input ☐ Multistate Output ☐ Multistate Value ☑ Network port ☐ Notification Class ☐ Program ☐ Schedule ☐ Trend Log

Data Link Layer Options	☐ BACnet Internet Protocol (IP) (Annex J) ☐ BACnet IP (Annex J), Foreign Device ☐ ISO 88023, Ethernet (Clause 7) ☐ ANSI/ATA 878.1, 2.5 MB ARCNET® network (Clause 8) ☐ ANSI/ATA 878.1, RS485 ARCNET network (Clause 8), baud rates: _____ ☑ Master-Slave/Token-Passing (MS/TP) master (Clause 9), baud rates: 9600, 19200, 38400, 57600, 76800, 115200 ☐ MS/TP slave (Clause 9), baud rates: _____ ☐ Point-To-Point, EIA 232 (Clause 10), baud rates: _____ ☐ Point-To-Point, modem (Clause 10), baud rates: _____ ☐ LonTalk® protocol (Clause 11), medium: _____ ☐ Other: _____
Device Address Binding:	Is static device binding supported? (required for two-way communication between MS/TP slaves and other devices) ☐ Yes ☑ No
Networking Options	☐ Router, Clause 6: _____ ☐ Annex H, BACnet Tunneling Router over IP ☐ BACnet/IP Broadcast Management Device (BBMD)
	Does the BBMD support registrations by Foreign Devices? ☐ Yes ☐ No

Character Sets Supported:	Indicating support for multiple character sets does not imply that they can all be supported simultaneously. ☑ UTF-8 / ANSI X3.4 ☐ IBM®/Microsoft® DoubleByte Character Set (DBCS) ☐ ISO 8859-1 ☐ ISO 10646 Universal Character Set-2 (UCS2) ☐ ISO 10646 (UCS-4) ☐ Japanese Industrial Standard (JIS) C 6226
Types of non-BACnet equipment /network(s) supported:	None

B.3 BACnet objects

All objects are created automatically during device manufacturing or later during operation. Objects are created based on detected measurement sources (probes and modules).

When the Origo10 transmitter detects a new measurement source (at start-up or during operation):

- All objects are created.
- The related Structured view object is updated.
- Information is stored to non-volatile memory.

B.3.1 BACnet object instance numbers

Instance numbers are allocated based on source locations. Actual instance numbers are formed by adding a base address and relative instance number from the measurement source image.

Table 53 Instance numbers for BACnet objects

Source	Base address	Allocated instance numbers
Origo10 transmitter	0	0 ... 99
Probe A (or only probe)	100	100 ... 199
Probe B	200	200 ... 299
Module 1	300	300 ... 399
Module 2	400	400 ... 499
Module 3	500	500 ... 599

B.3.1.1 Analog input instance numbering

Table 54 Analog input instance numbering

Relative instance number	Name	Description	Metric unit	Non-metric unit
0	“Source/Rh”	“Relativehumidity”	percent-relative-humidity	percent-relative-humidity
1	“Source/T”	“Temperature”	ºC	ºF
2	"Source/Td"	“Dewpointtemperature”	ºC	ºF
3	"Source/Tdf"	"Dew/frostpointtemperature"	ºC	ºF
4	“Source/a”	“Absolutehumidity”	grams-per-cubic-meter	grains-per-cubic-foo
5	"Source/x"	"Mixingratio"	grams-of-water-per-kilogram-dry-air	grains-of-water-per-pound
6	"Source/Tw"	"Wetbulbtemperature"	ºC	ºF
7	“Source/pw”	“Watervaporpressure”	hectopascals	pounds-force-per-square-inch
8	“Source/pws”	“Watervaporsaturationpressure”	hectopascals	pounds-force-per-square-inch
9	"Source/h"	"Enthalpy"	kilojoules-per-kilogram-dry-air	btus-per-pound-dry-air
10	“Source/CO2”	“Carbondioxideconcentration”	parts-per-million	%

B.3.2 BACnet object properties

Status flags

Table 55 Status flags

Flag	State	Cause
IN_ALARM	FALSE	Event State equals 0 (NORMAL)
		Event State not 0

Flag	State	Cause
FAULT	FALSE	Reliability equals 0 (NO FAULT DETECTED)
	TRUE	Reliability not 0
OVERRIDDEN	FALSE	Always FALSE
OUT_OF_SERVICE	FALSE	Present Value may NOT be written via BACnet
	TRUE	Present Value may be written via BACnet

Reliability

Table 56 Reliability

State	Cause
0 NO_FAULT_DETECTED	
1 NO_SENSOR	If probe/module reports “unavailable”.
2 OVER_RANGE	If probe/module reports "over range".
3 UNDER_RANGE	If probe/module reports "under range".
7 UNRELIABLE_OTHER	Other measurement errors

Event state

Table 57 Event state

State	Cause
0 NORMAL	Reliability equals 0 (NO FAULT DETECTED)
1 FAULT	Reliability not 0

Priority array

Objects that support the priority array property have their array stored in non-volatile memory. The transmitter's system level commands and user settings through the transmitter service port share the priority array with BACnet.

Table 58 BACnet command priorities

Commander	BACnet command priority
Transmitter system level	16 – Lowest and default

Commander	BACnet command priority
Service port command	8 – Manual operation

To clear a priority array, the user needs to write the correspond priority level to empty.

The array can also be reset by restoring the factory settings when the restore point does not have anything saved into the array.

The priority array is automatically cleared when the user switches between the Modbus RTU and BACnet MS/TP interface modes. The interface mode is selected with the Insight PC software.

B.3.3 Device object

Table 59 Device object properties

Property	Data type (Application data type)	Writable (Conformance code)	Value or initial value	Persistence
Active_Cov_Subscriptions	BACnetLIST_of_BACnetCOVSubscription	N (O)		Nonvolatile
APDU_Timeout	Unsigned	N (R)	3000(ms)	Fixed
Application_Software_Version	CharacterString	N (R)	X.X.X	Fixed
Database_Revision	Unsigned	N (R)	0	Nonvolatile
Description	CharacterString[32]	Y (R)	“Description”	Nonvolatile
Device_Address_Binding	ListofBACnetAddressBinding	N (R)		Fixed
Firmware_Revision	CharacterString	N (R)	X (BACnet interface)	Fixed
Location	CharacterString[40]	Y (R)	“Location”	Nonvolatile
Max_APDU_Length_Accepted	Unsigned16	N (R)	480	Fixed
Max_Info_Frames	Unsigned	N (R)	1	Fixed
Max_Master	Unsigned16 (0 ... 127)	N (R)	127	Nonvolatile
Model_Name	CharacterString	N (R)	"Origo10”	Nonvolatile
Number_of_Apdu_Retries	Unsigned	N (R)	3	Fixed

Property	Data type (Application data type)	Writable (Conformance code)	Value or initial value	Persistence
Object_Identifier	BACnetObjectIdentifier	Y(R)	02000000(hex)ObjectType=8,Instance=xxxxxxx	Nonvolatile
Object_List	BACnetARRAY[N]_of_BACnetObjectIdentifier	N (R)	DeviceObject_AI1(RelativeHumidity)_AI2(Temperature)... BI1(Input1)_BI2(Input2) ... SV1(ProbeA)_SV2(ProbeB)...	Nonvolatile
Object_Name	CharacterString[40]	Y (R)	Origo10_Yxxxxxxx	Nonvolatile
Object_Type	BACnetObjectType_(ENUMERATED)	N (R)	8 (DeviceObject)	Fixed
Property_List	BACnetARRAY[N]_of_BACnetPropertyIdentifier	N (R)		Fixed
Protocol_Object_Types_Supported	BACnetObjectTypesSupported_(BITSTRING)	N (R)	Analog-Input_Analog-Value_Binary-Input_Binary-Output_Device_Structured-View	Fixed
Protocol_Revision	Unsigned	N (R)	26	Fixed
Protocol_Services_Supported	BACnetProtocolServicesSupported_(BITSTRING)	N (R)	ReadProperty_ReadPropertyMultiple_WriteProperty_DeviceCommunicationControl_ReinitializeDevice_Who-Is_Who-Has	Fixed
Protocol_Version	Unsigned	N (R)	1	Fixed
Segmentation_Supported	BACnetSegmentation_(ENUMERATED)	N (R)	3(Nosegmentation)	Fixed
Structured_Object_List	BACnetARRAY[5]_of_BACnetObjectIdentifier	N (O)	SV1(ProbeA)_SV2(ProbeB)_SV3(Module1)_SV4(Module2)_SV5(Module3)	Fixed
System_Status	BACnetDeviceStatus_(ENUMERATED)	N (R)	0 (Operational)	Volatile
Vendor_Identifier	Unsigned16	N (R)	339	Fixed

Property	Data type (Application data type)	Writable (Conformance code)	Value or initial value	Persistence
Vendor_Name	CharacterString	N (R)	"Vaisala"	Fixed

Object_Identifier

Must be unique in BACnet network. As Object_Identifier is 22 bits long, it has a value range of 0 ... 4194303. Each device is assigned a random value in this range at Vaisala factory.

Object_Name

Must be unique in BACnet network. Default object name contains the name and serial number of the device. For example:

- Device model is Origo10, with serial number G1234567
- Object_Name is "Origo10_G1234567"

System_Status

System status can be OPERATIONAL (0) or NON-OPERATIONAL (4). Device goes to NON-OPERATIONAL state in case of fatal error.

Protocol_Services

Reinitialize Device and Device Communication Control services must be password protected. According to BACnet protocol, password is a character string of max. 20 characters. The default password is "1234". The password can be changed using Vaisala Insight PC software.

Database_Revision

This is changed during operation according to standard 12.11.35 (EN ISO 17848-5).

B.3.4 Network port object

Table 60 Network port object properties

Property	Data type (range)	Writable (Conformance code)	Value or initial value	Persistence
APDU_Length	Unsigned	N (R)	480	Nonvolatile
Changes_Pending	BOOLEAN	N (R)	True / False	Volatile
Link_Speed	Real	Y (R)	Current baud rate	Volatile
Link_Speeds	BACnetARRAY	N (R)	List possible baud rates	Nonvolatile

Property	Data type (range)	Writable (Conformance code)	Value or initial value	Persistence
Mac Address	OCTET STRING	N (R)	Current Mac Address	Volatile
Max_Info_Frames	Unsigned	Y (R)	1	Fixed
Max_Master	Unsigned16 (0..127)	Y (R)	127	Nonvolatile
Network_Number	Unsigned16	N (R)	0 .. 65534	Volatile
Network_Number_Quality	BACnetNetworkNumberQuality	N (R)	(3) Configured	Volatile
Network_Type	BACnetNetworkType	N (R)	MSTP	Fixed
Object_Identifier	BACnetObjectIdentifier	N (R)	Network_Port:1	Nonvolatile
Object_Name	CharacterString[40]	N (R)	Network_Port	Nonvolatile
Object_Type	BACnetObjectType_(ENUMERATED)	N (R)	(56)Network_port	Fixed
Out_of_Service	BOOLEAN	Y (R)	0(FALSE)	Volatile
PropertyList	BACnetARRAY[N]_of_BACnetPropertyIdentifier	N (R)		Fixed
Proprietary: 513 (BaudRate)	Unsigned	Y (R)	19200	Nonvolatile
Proprietary: 514 (MACAddress)	Unsigned	Y (R)	127	Nonvolatile
Protocol_Level	BACnetProtocolLevel	N (R)	BACNET_APPLICATION	Fixed
Reliability	BACnetReliability_(ENUMERATED)	Y (whenOoS) (O)	0(NOFAULT DETECTED)	Volatile
Status_Flags	BACnetStatusFlags_(BITSTRING)	N (R)	0(FAULT==FALSE)	Volatile

B.3.5 Analog input object

Table 61 Analog input object properties

Property	Data type (Range)	Writable (Conformance code)	Value or initial value	Persistence
COV_Increment	Real	Y (O)	0.1	Nonvolatile
Description	CharacterString	Y (O)	"RelativeHumidity"	Nonvolatile
Device_Type	CharacterString	N (O)	e.g. "HMP110W1234567"	Nonvolatile
EventState	BACnetEventState_(ENUMERATED)	N (R)	0 (NORMAL)	Volatile
Object_Identifier	BACnetObjectIdentifier	N (R)	00000001(hex)_ObjectType=0_Instance=1	Fixed
Object_Name	CharacterString	Y (R)	"PA/RH"	Nonvolatile
Object_Type	BACnetObjectType_(ENUMERATED)	N (R)	0 (AnalogInput)	Fixed
Out_of_Service	BOOLEAN	Y (R)	0 (FALSE)	Volatile
Present_Value	Real	Y (WhenOos) (R)	0	Volatile
Property_List	BACnetARRAY[N]_of_BACnetPropertyIdentifier	N (R)		Fixed
Reliability	BACnetReliability_(ENUMERATED)	Y (whenOoS) (O)	0 (NOFAULTDETECTED)	Volatile
Status_Flags	BACnetStatusFlags_(BITSTRING)	N (R)	0 (FAULT==FALSE)	Volatile
Units	BACnetEngineeringUnits_(ENUMERATED)	Y (R)	29 (percent-relative-humidity)	Nonvolatile

B.3.6 Binary input object

Table 62 Binary input object properties

Property	Data type (Range)	Writable (Conformance code)	Value or initial value	Persistence
Description	CharacterString	Y (O)	“Input 1”	Nonvolatile
Device_Type	CharacterString	N (O)	“DIO10 X1231234”	Nonvolatile
EventState	BACnetEventState_(ENUMERATED)	N (R)	0 (NORMAL)	Volatile
Object_Identifier	BACnetObjectIdentifier	N (R)	BINARY_INPUT:xxx	Fixed
Object_Name	CharacterString	Y (R)	"M1/In1"	Nonvolatile
Object_Type	BACnetObjectType_(ENUMERATED)	N (R)	3 (BinaryInput)	Fixed
Out_of_Service	BOOLEAN	Y (R)	0 (FALSE)	Volatile
Polarity	BACnetPolarity_(ENUMERATED)	N (R)	normal	Nonvolatile
Present_Value	BACnetBinaryPV_(ENUMERATED)	Y (WhenOos) (R)	0	Volatile
PropertyList	BACnetARRAY[N]_of_BACnetPropertyIdentifier	N (R)		Fixed
Reliability	BACnetReliability_(ENUMERATED)	Y (whenOoS) (O)	0 (NOFAULTDETECTED)	Volatile
Status_Flags	BACnetStatusFlags_(BITSTRING)	N (R)	0 (FAULT==FALSE)	Volatile

B.3.7 Binary output object

Table 63 Binary output object properties

Property	Data type (Range)	Writable (Conformance code)	Value or Initial Value	Persistence
Current_Command_Priority	BACnetOptionalUnsigned	N (R)		
Description	CharacterString	Y (O)	“Output 1”	Nonvolatile

Property	Data type (Range)	Writable (Conformance code)	Value or Initial Value	Persistence
Device_Type	CharacterString	N (O)	“DIO10 X1231234”	Nonvolatile
EventState	BACnetEventState_(ENUMERATED)	N (R)	0 (NORMAL)	Volatile
Object_Identifier	BACnetObjectIdentifier	N (R)	BINARY_OUTPUT:xxx	Fixed
Object_Name	CharacterString	Y (R)	"M1/In1"	Nonvolatile
Object_Type	BACnetObjectType_(ENUMERATED)	N (R)	3 (BinaryInput)	Fixed
Out_of_Service	BOOLEAN	Y (R)	0 (FALSE)	Volatile
Polarity	BACnetPolarity_(ENUMERATED)	N (R)	normal	Nonvolatile
Present_Value	BACnetBinaryPV_(ENUMERATED)	Y (WhenOos) (R)	0	Volatile
Priority_Array	BACnetPriorityArray	N (R)		
PropertyList	BACnetARRAY[N]_of_BACnetPropertyIdentifier	N (R)		Fixed
Reliability	BACnetReliability_(ENUMERATED)	Y (whenOoS) (O)	0 (NOFAULTDETECTED)	Volatile
Relinquish_Default	BACnetBinaryPV	N (R)		
Status_Flags	BACnetStatusFlags_(BIT STRING)	N (R)	0 (FAULT==FALSE)	Volatile

B.3.8 Structured view

The structured view of BACnet objects is a collection of the objects included in a single measurement device connected to the transmitter. For example, the analog input and binary input objects of the TMM10 temperature measurement module.

Table 64 Structured view properties

Property	Data type (Range)	Writable (Conformance code)	Value or initial value	Persistence
Description	CharacterString[24]	N (O)	e.g. "HMP110W1234567"	Nonvolatile

Property	Data type (Range)	Writable (Conformance code)	Value or initial value	Persistence
Node_Type	BACnetNodeType_(ENUMERATED)	N (R)	16 (module)	Fixed
Object_Identifier	BACnetObjectIdentifier	N (R)	STRUCTURED_VIEW:x	Fixed
Object_Name	CharacterString[40]	Y (R)	Sourcenamelike “Probe_A”	Nonvolatile
Object_Type	BACnetObjectType_(ENUMERATED)	N (R)	29 (Structuredview)	Fixed
Property_List	BACnetARRAY[N]_of_BACnetPropertyIdentifier	N (R)		Fixed
Subordinate_List	BACnetARRAY[N]_of_BACnetDeviceObjectReference	N (R)	AI1(RelativeHumidity)_AI2(Temperature) ... BI1(Input1)_BI2(Input2)	Nonvolatile
Subordinate_Node_Types	BACnetARRAY[N]_of_BACnetNodeType	N (O)	9(property)9(property)9(property)9(property)...	Nonvolatile

B.4 BIBBs Supported

Table 65 (page 154) lists all the BACnet Interoperability Building Blocks (BIBBs) that, per EN ISO 16484:5-2017 standard, could be supported by a BACnet Application Specific Controller (B-ASC).

The checked BIBBs are supported by Origo10.

Table 65 BIBBs Supported

Function	Designation	Supported
Data Sharing - Read Property - A	DS-RP-A	☐
Data Sharing - Read Property - B	DS-RP-B	☑
Data Sharing - Read Property Multiple - A	DS-RPM-A	☐
Data Sharing - Read Property Multiple - B	DS-RPM-B	☑
Data Sharing - Write Property - A	DS-WP-A	☐
Data Sharing - Write Property - B	DS-WP-B	☑
Data Sharing - Write Property Multiple - B	DS-WPM-B	☐

Function	Designation	Supported
Data Sharing - COV - Unsolicited - A	DS-COVU-A	☐
Data Sharing - COV - Unsolicited - B	DS-COVU-B	☐
Data Sharing - COV - B	DS-COV-B	☑
Alarm and Event - Notification Internal - B	AE-N-I-B	☐
Alarm and Event - ACK - B	AE-ACK-B	☐
Alarm and Event - Information - B	AE-INFO-B	☐
Alarm and Event - Enrollment Summary - B	AE-ESUM-B	☐
Scheduling - External - B	SCHED-E-B	☐
Trending - Viewing and Modifying Trends Internal - B	T-VMT-I-B	☐
Trending - Automated Trend Retrieval - B	T-ATR-B	☐
Device Management - Dynamic Device Binding - A	DM-DDB-A	☐
Device Management - Dynamic Device Binding - B	DM-DDB-B	☑
Device Management - Dynamic Object Binding - A	DM-DOB-A	☐
Device Management - Dynamic Object Binding - B	DM-DOB-B	☑
Device Management - Device Communication Control - B	DM-DCC-B	☑
Device Management - Time Synchronization - B	DM-TS-B	☐
Device Management - UTC Time Synchronization - B	DM-UTC-B	☐
Device Management - Reinitialize Device - B	DM-RD-B	☑
Device Management - Backup and Restore - B	DM-BR-B	☐
Network Management - Connection Establishment - A	NM-CE-A	☐

B.5 Application Services Supported

Table 66 (page 155) lists all the BACnet standard application services.

The checked services are supported by Origo10.

Table 66 Application Services Supported

Application Service	Initiates Requests	Executes Requests
AcknowledgeAlarm	☐	☐
AddListElement	☐	☑
AtomicReadFile	☐	☐

Application Service	Initiates Requests	Executes Requests
AtomicWriteFile	☐	☐
ConfirmedCOVNotification	☑	☐
ConfirmedEventNotification	☐	☐
ConfirmedPrivateTransfer	☐	☐
ConfirmedTextMessage	☐	☐
CreateObject	☐	☐
DeleteObject	☐	☐
DeviceCommunicationControl	☐	☑
Disconnect-Connection-To-Network	☐	☐
Establish-Connection-To-Network	☐	☐
GetAlarmSummary	☐	☐
GetEnrollmentSummary	☐	☐
GetEventInformation	☐	☐
I-Am	☑	☐
I-Am-Router-To-Network	☐	☐
I-Could-Be-Router-To-Network	☐	☐
I-Have	☑	☐
Initialize-Routing-Table	☐	☐
Initialize-Routing-Table-Ack	☐	☐
LifeSafetyOperation	☐	☐
ReadProperty	☐	☑
ReadPropertyConditional	☐	☐
ReadPropertyMultiple	☐	☑
ReadRange	☐	☐
ReinitializeDevice	☐	☑
RemoveListElement	☐	☑
SubscribeCOV	☐	☑
SubscribeCOVProperty	☐	☑
TimeSynchronization	☐	☐
UnconfirmedCOVNotification	☑	☐
UnconfirmedEventNotification	☐	☐

Application Service	Initiates Requests	Executes Requests
UnconfirmedPrivateTransfer	☐	☐
UnconfirmedTextMessage	☐	☐
UTCTimeSynchronization	☐	☐
VT-Close	☐	☐
VT-Data	☐	☐
VT-Open	☐	☐
Who-Has	☐	☑
Who-Is	☐	☑
Who-Is-Router-To-Network	☐	☐
WriteProperty	☐	☑
WritePropertyMultiple	☐	☐

Appendix C. Regulatory statements

C.1 Origo10 manufacturer contact information

Made in Finland by:

Vaisala Oyj, Vanha Nurmijärventie 21, FI-01670, Vantaa

Imported to UK by:

Vaisala Ltd, 6230 Bishops Court, Birmingham B37 7YB

C.2 Korean conformity information

Company name: Vaisala Oyj

Name of equipment: ORIGO10 TRANSMITTER

Country of manufacture: Finland

Link to RRA registration information: www.rra.go.kr/selform/rws-ORIGO10

C.3 FCC Part 15 compliance statement

This equipment has been tested and found to comply with the limits for a Class B digital device, pursuant to Part 15 of the FCC rules. These limits are designed to provide reasonable protection against harmful interference in a residential installation. This equipment generates, uses and can radiate radio frequency energy and, if not installed and used in accordance with the instructions, may cause harmful interference to radio communications. However, there is no guarantee that the interference will not occur in a particular installation. If this equipment does cause harmful interference to radio or television reception, which can be determined by turning the equipment off and on, the user is encouraged to try to correct the interference by one or more of the following measures:

- Reorient or relocate the receiving antenna.
- Increase the separation between the equipment and receiver.
- Connect the equipment into an outlet on a circuit different from that to which the receiver is connected.
- Consult the dealer or an experienced radio/TV technician for help.

Changes or modifications to this equipment not expressly approved by the party responsible for compliance could void the user's authority to operate the equipment.

CAUTION! This device complies with part 15 of the FCC Rules. Operation is subject to the following two conditions: (1) This device may not cause harmful interference, and (2) this device must accept any interference received, including interference that may cause undesired operation.

C.4 Canada ICES-3 / NMB-3 compliance statement

This Class B digital apparatus complies with Canadian ICES-003.

Cet appareil numérique de classe B est conforme à la norme canadienne NMB-003.

C.5 China RoHS information table

Information table on names and contents of hazardous substances in products					
Hazardous substances	**Component name**				
	Housing	**Cabling**	**Electronics**	**Accessories**	**Packaging**
Lead (Pb)	O	O	X	O	O
Mercury (Hg)	O	O	O	O	O
Cadmium (Cd)	O	O	O	O	O
Hexavalent chromium (Cr (VI))	O	O	O	O	O
Polybrominated biphenyls (PBB)	O	O	O	O	O
Polybrominated diphenyl ethers (PBDE)	O	O	O	O	O
Dibutyl phthalate (DBP)	O	O	O	O	O
Diisobutyl phthalate (DIBP)	O	O	O	O	O
Butyl benzyl phthalate (BBP)	O	O	O	O	O
Bis(2-ethylhexyl) phthalate (DEHP)	O	O	O	O	O

This table is prepared in accordance with the provisions of GB 26572-2025.

NOTE 1:

O: Indicates that the content of the hazardous substance in all homogeneous materials of the component does not exceed the requirements of the national standard for the restricted use of hazardous substances in electrical and electronic products.

X: Indicates that the content of the hazardous substance in at least one homogeneous material of the component exceeds the requirements of the national standard for the restricted use of hazardous substances in electrical and electronic products.

NOTE 2: Components not listed above indicate that the content of the hazardous substances in these components does not exceed the requirements of the national standard for the restricted use of hazardous substances in electrical and electronic products.

产品中有害物质的名称及含有的信息表

有害物质		部件名称				
		外壳	线缆	电子部件	附件	包装
铅（Pb）		O	O	X	O	O
汞（Hg）		O	O	O	O	O
镉（Cd）		O	O	O	O	O
六价铬（Cr (VI)）		O	O	O	O	O
多溴联苯（PBB）		O	O	O	O	O
多溴二苯醚（PBDE）		O	O	O	O	O
邻苯二甲酸二正丁酯（DBP）		O	O	O	O	O
邻苯二甲酸二异丁酯（DIBP）		O	O	O	O	O
邻苯二甲酸丁苄酯（BBP）		O	O	O	O	O
邻苯二甲酸二（2-乙基）己酯（DEHP）		O	O	O	O	O

本表依据 GB 26572-2025 的规定编制。

注 1：

O：表示该有害物质在该部件所有均质材料中的含量均不超出电器电子产品有害物质限制使用国家标准要求。

X：表示该有害物质至少在该部件的某一均质材料中的含量超出电器电子产品有害物质限制使用国家标准要求。

注 2：

以上未列出的部件,表明其有害物质含量均不超出电器电子产品有害物质限制使用国家标准要求。

Appendix D. Recycling instructions

These recycling instructions guide you on the end-of-life treatment of this Vaisala product. As waste regulations and infrastructure vary in each country, these instructions only indicate the different components to be separated and common ways to handle them. Always follow local requirements when disposing of the product. Vaisala encourages to use the best available recycling practices to minimize related environmental impacts.

Vaisala is committed to meeting the requirements of the EU Waste Electrical and Electronic Equipment (WEEE) Directive. This directive aims to minimize the impact of electrical and electronic goods on the environment, by increasing reuse and recycling, and reducing the amount of WEEE going to landfill. This symbol indicates that the product should be collected separately from other waste streams and treated appropriately.

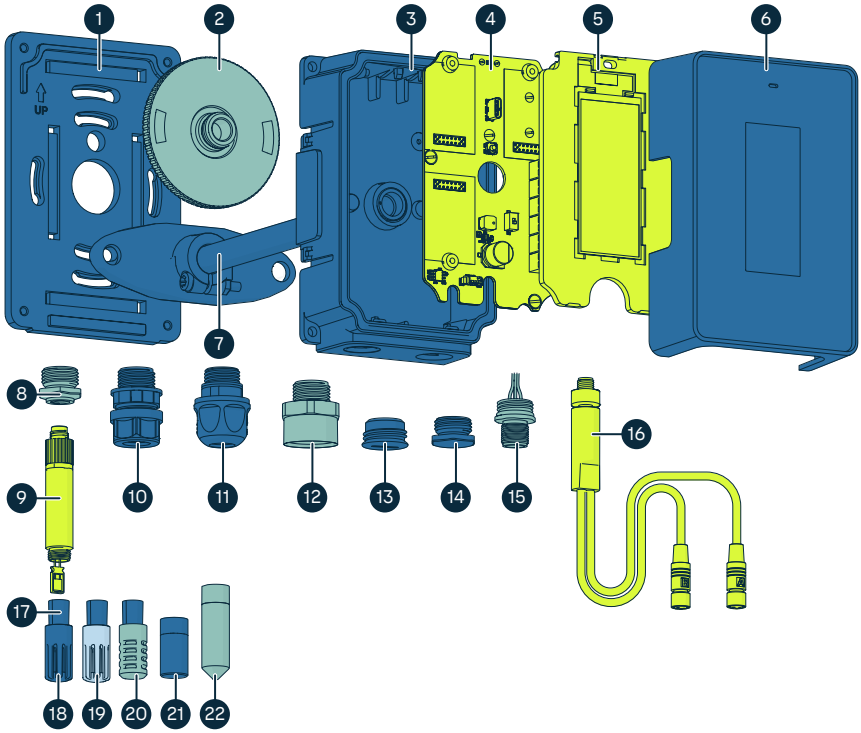

Figure 60 Materials for recycling

Recycling	Part	Material
Electrical and electronic waste	4, 5, 9, 16	Various
Metal waste	2, 8, 12, 15, 20, 22	Plastic-enclosed magnet: 2 Brass, stainless steel: 8, 12, 15, 20, 22
Plastic waste	1, 3, 6, 7, 10, 11, 13, 14, 18	Polyamide (PA): 10, 11 Polycarbonate (PC): 1, 3, 6, 7, 13, 14, 18 Polytetrafluoroethylene (PTFE): 17, 21
Mixed waste	19	Metallized polycarbonate (PC)

Index

A

abbreviation....32
adapter plate....46, 53
analog output adjustment....100
analog output overrange....87
analog output test....103

B

BACnet application services supported....155
BACnet BIBBS supported....154
BACnet objects....144
binary input....95
  wiring....68, 71

C

cable diameter....45, 46
cable glands....48
cable routing
  wiring....44
calibration and adjustment....98
configuration code....15
constant output probe....24

D

diagnostics....114
dimensions....119
DIN rail adapter....54
DIO10
  wiring....68
display....30
duct model parts....16
duct mounting....48

E

error log export....114
ESD protection....36

F

factory reset....107
firmware update....109

G

grounding....38

H

humidity probe adjustment example....99
hygienic gland....45

I

Insight software
  user modes....77

L

LED....33

M

M12 connector....48
magnetic bracket....56
measurement parameter....32
mode button....29
modules....21
  replacement....110
  wiring....68, 71

O

Origo10A....27
Origo10A wiring....64
Origo10L....28
Origo10L wiring....61

P

passcode....78
probes....21, 57

R

relays
  activation options....89
  hysteresis....90

restart.....106
RS-485
  wiring.....66

S
safety.....36
serial interface settings.....125
service centers.....123
service port
  USB-C.....34
splitter cable.....59

T
TMM10
  wiring..... 71

W
wall model parts.....18
wall mounting..... 51
wiring terminals
  2-wire loop-powered analog outputs.....61
  3-wire analog outputs.....65
  RS-485.....66

Open-source software (OSS)

For licenses for the open-source software (OSS) used in this product, see the **Diagnostics** tab in the Vaisala Insight PC software.

You may request a copy of certain open-source code as required by certain applicable OSS licenses by sending an email to opensourcesw@vaisala.com with the following subject line: *OSS source code request*.

Online store

Accessories, spare parts, and calibration and repair products are available online at store.vaisala.com.

VAISALA

vaisala.com

AKRIBIS · www.akribis.info · contacto@akribis.info