USER GUIDE

# MYA 31.5Y

Radwag

Distributed by AKRIBIS

# Software manual

**ITKP-49-02-03-24-EN**

# APPENDICES 03

PUE CY10 ITERMINAL
PUE 5 TERMINAL
CY10 SCALE
TMX SCALE
5Y SCALE

**radwag.com**
Scan the QR code to view additional scientific material that may be of interest to you.
There you will find more useful information in an accessible format!

AKRIBIS www.akribis.info contacto@akribis.info

MARCH 2024

# Table of contents

**1. ANNEX 01 – Printout Variables ..... 4**
1.1. List of variables ..... 4
1.2. Variable Formatting ..... 18
**2. ANNEX 02 – Label Template ..... 20**
2.1. Creation of Label Template via Scale ..... 21
2.2. Sending Label Template to Scale Memory ..... 21
2.3. Assigning Label with a Template to a Product ..... 21
2.4. Assigning Collective Label with a Template to a Product ..... 21
2.5. Assigning Label with a Template to a Customer ..... 21
2.6. Printing Label with a Template ..... 22
**3. ANNEX 03 – RADWAG Printer Configuration ..... 22**
3.1. Test Page Printout ..... 23
3.2. Serial Communication Parameters ..... 23
3.3. Paper Cut Function ..... 23
3.4. Changing printer code page ..... 23
**4. ANNEX 04 – ZEBRA Printer Configuration ..... 24**
**5. ANNEX 05 – Barcode Scanner Configuration ..... 25**

# 1. ANNEX 01 – Printout Variables

## 1.1. List of variables

| | |
|---|---|
| | ***The list of variables includes items available to all scale types and all software types. Therefore some variables will not be supported by some scale types.*** |
| | ***Each defined variable must be inserted in between curly bracket: {x}, where x – variable number.*** |

The list of variables for defining non-standard printout templates and data displayed in the working area of the scale window:

| Symbol | Description |
|---|---|
| **{0}** | Standard printout in an adjustment unit |
| **{1}** | Standard printout in a current unit |
| **{2}** | Date |
| **{3}** | Time |
| **{4}** | Date and time |
| **{5}** | Working mode |
| **{6}** | Net weight in current unit |
| **{7}** | Net weight in adjustment unit |
| **{8}** | Gross weight in adjustment unit |
| **{9}** | Tare in adjustment unit |
| **{10}** | Current unit |
| **{11}** | Adjustment unit |
| **{12}** | Minimum threshold |
| **{13}** | Maximum threshold |
| **{25}** | Measurement index |
| **{26}** | Result control |
| **{27}** | Amount due |
| **{28}** | Level status |
| **{29}** | Measurement header |
| **{30}** | Gross amount due |
| **{31}** | Platform number |
| **{32}** | Serial number |
| **{33}** | Balance weighing interval |

| | |
|---|---|
| **{34}** | Range |
| **{36}** | Percent weighing: Reference mass |
| **{37}** | ID |
| **{38}** [3)] | Universal variable: Name |
| **{39}** [3)] | Universal variable: Value |
| **{42}** [1)] | Platform mass |
| **{43}** | Net mass in supplementary unit |
| **{44}** | Supplementary unit |
| **{45}** | Target value |
| **{46}** | Tolerance |
| **{47}** | Checkweighing: Difference |
| **{48}** | Scale type |
| **{135}** | THB temperature |
| **{136}** | THB humidity |
| **{137}** | THB pressure |
| **{138}** | Vibrations |
| **{139}** | Air density |
| **{140}** | Additional display: WD6 |
| **{141}** | Additional display: WD4 |
| **{142}** | Additional display: WWG |
| **{143}** | Hex |
| **{144}** | Hex UTF-8 |
| **{146}** | Gross mass in current unit |
| **{147}** | Tare in current unit |
| **{148}** | Tare description |
| **{150}** | Epson printer: Paper cut |
| **{151}** | PCL6 printer: page offset |
| **{155}** | Cooperation with RADWAG CONNECT |
| **{156}** | SD mass in adjustment unit |
| **{157}** | SD mass in current unit |
| **{375}** | Differential weighing: Method |
| **{589}** | Global weighing count |
| **{620}** | Note |

| Product | |
|---|---|
| **{50}** | Name |
| **{51}** | Code |
| **{52}** | EAN code |
| **{53}** | Mass |
| **{54}** | Tare |
| **{55}** | Price |
| **{56}** | Minimum |
| **{57}** | Maximum |
| **{58}** [2)] | KTP mode |
| **{59}** | Shelf-life time in days |
| **{60}** | VAT |
| **{61}** | Date |
| **{62}** | Shelf-life time |
| **{63}** | Density |
| **{64}** | Ingredients |
| **{65}** | Description |
| **{66}** | Tolerance |
| **{67}** [2)] | SQC mode |

| User | |
|---|---|
| **{75}** | Name |
| **{76}** | Code |
| **{77}** | Permissions |
| **{78}** | First and last name |

| Packaging | |
|---|---|
| **{80}** | Name |
| **{81}** | Code |
| **{82}** | Mass |

| Client/Customer | |
|---|---|
| **{85}** | Name |
| **{86}** | Code |
| **{87}** | NIP [*taxpayer's ID*] |
| **{88}** | Address |

| | |
|---|---|
| **{89}** | Postal code |
| **{90}** | City/rown |
| **{91}** | Discount |

| **Warehouse** | |
|---|---|
| **{130}** | Name |
| **{131}** | Code |
| **{132}** | Description |

| **Formulations** | |
|---|---|
| **{165}** | Name |
| **{166}** | Code |
| **{167}** | Number of ingredients |
| **{168}** | Sum |
| **{169}** | Ingredients |
| **{170}** | Ingredient number |
| **{188}** | Ingredient: Target mass |
| **{189}** | Ingredient: Difference |

| **Pipette** | |
|---|---|
| **{310}** | Name |
| **{311}** | Code |
| **{312}** | Model |
| **{313}** | Tips |
| **{314}** | Nominal volume |
| **{315}** | Minimum volume |
| **{316}** | Number of channels |
| **{317}** | Type |
| **{318}** | Volume type |
| **{319}** | Tested volume |
| **{320}** | Serial number |

| **Series** | |
|---|---|
| **{350}** | Name |
| **{351}** | Code |
| **{352}** | Samples |
| **{353}** | Number of samples |

| Sample | |
|---|---|
| **{355}** | Name |
| **{356}** | Status |
| **{357}** | Tare |
| **{358}** | Temperature |
| **{359}** | Humidity |
| **{360}** | Pressure |
| **{361}** | Sample number |

| Minimum sample | |
|---|---|
| **{440}** | Name |
| **{441}** | Reference tare |
| **{442}** | Mass |
| **{443}** | Status |

| Average Tare Report | |
|---|---|
| **{92}** [2)] | Coefficient of standard packaging deviation |
| **{120}** [2)] | Date |
| **{121}** [2)] | Result |
| **{122}** [2)] | Standard deviation |
| **{123}** [2)] | Tare average limit |
| **{124}** [2)] | Number of measurements |
| **{125}** [2)] | Measurements |
| **{126}** [2)] | Report no. |
| **{127}** [2)] | Method |
| **{128}** [2)] | Average limit |
| **{129}** [2)] | Method |

| Control report | |
|---|---|
| **{93}** | Number of errors T1+ |
| **{94}** | Number of errors 2T1+ |
| **{95}** | Errors value T1+ |
| **{96}** | Errors value 2T1+ |
| **{97}** | Permissible number of errors 2T1- |
| **{98}** | Permissible number of errors T1+ |
| **{99}** | Permissible number of errors 2T1+ |

| | |
|---|---|
| **{100}** | Batch number |
| **{101}** | Start date |
| **{102}** | End date |
| **{103}** | Result |
| **{104}** | Batch quantity |
| **{105}** | Number of measurements |
| **{106}** | Error value T1 |
| **{107}** | Error value 2T1 |
| **{108}** | Number of errors T1 |
| **{109}** | Permissible number of errors T1 |
| **{110}** | Number of errors 2T1 |
| **{111}** | Sum |
| **{112}** | Min |
| **{113}** | Max |
| **{114}** | Average |
| **{115}** | Average limit |
| **{116}** | Standard deviation |
| **{117}** | Measurements |
| **{118}** | Unit |
| **{119}** | Report no. |
| **{128}** | Average limit |
| **{129}** | Method |
| **{465}** | Error value T3+ |
| **{466}** | Error value T4+ |
| **{467}** | Error value T3- |
| **{468}** | Error value T4- |
| **{469}** | Number of errors T3- |
| **{470}** | Number of errors T4- |
| **{471}** | Number of errors T3+ |
| **{472}** | Number of errors T4+ |
| **{473}** | Permissible number of errors T4- |
| **{474}** | Permissible number of errors T3- |
| **{475}** | Permissible number of errors T3+ |
| **{476}** | Permissible number of errors T4+ |
| **{477}** | Sum of tares |

| | |
|---|---|
| **{478}** | Min of tares |
| **{479}** | Max of tares |
| **{480}** | Average of tares |
| **{481}** | Standard deviation of tares |
| **{482}** | Measurements of tares |
| **{483}** | Unit of tares |
| **{484}** | Dispersion |
| **{485}** | RDV |
| **{486}** | Density |
| **{535}** | T1- error percentage |
| **{536}** | T2- error percentage |
| **{537}** | T3- error percentage |
| **{538}** | T4- error percentage |
| **{539}** | T1+ error percentage |
| **{540}** | T2+ error percentage |
| **{541}** | T3+ error percentage |
| **{542}** | T4+ error percentage |
| **{543}** | Dispersion [%] |
| **{544}** | Minimum percentage value |
| **{545}** | Maximum percentage value |
| **{546}** | Average percentage value |
| **{547}** | Standard deviation for percentage value |
| **{548}** | T1- error value in percents |
| **{549}** | T2- error value in percents |
| **{550}** | T3- error value in percents |
| **{551}** | T4- error value in percents |
| **{552}** | T1+ error value in percents |
| **{553}** | T2+ error value in percents |
| **{554}** | T3+ error value in percents |
| **{555}** | T4+ error value in percents |
| **{556}** | Nominal average difference |
| **{557}** | Nominal average difference - status |
| **{558}** | Measurement on bar graph |

| Formulations report | |
|---|---|
| **{175}** | Start date |
| **{176}** | End date |
| **{177}** | Sum |
| **{178}** | Target value |
| **{179}** | Difference |
| **{180}** | Number of measurements |
| **{181}** | Status |
| **{182}** | Measurements |

| Ambient conditions report | |
|---|---|
| **{274}** | Vibrations |
| **{275}** | Date and time |
| **{276}** | THB temperature |
| **{277}** | THB humidity |
| **{278}** | Temperature 1 |
| **{279}** | Temperature 2 |
| **{280}** | THB pressure |
| **{281}** | Air density |
| **{282}** | Humidity |
| **{283}** | Pressure |
| **{284}** | THB temperature additional sensor |

| Pipette calibration report | |
|---|---|
| **{325}** | Serial number |
| **{326}** | Start date |
| **{327}** | End date |
| **{328}** | Number of measurements |
| **{329}** | Operation with adherence to ISO 8655 |
| **{330}** | Status |
| **{331}** | Temperature |
| **{332}** | Humidity |
| **{333}** | Pressure |
| **{334}** | Water temperature |
| **{335}** | Z coefficient |
| **{336}** | Statistics |

| | |
|---|---|
| **{337}** | Measurements and statistics |
| **{338}** | Channel number |

| **Parts counting** | |
|---|---|
| **{40}** | Reference sample quantity |
| **{35}** | Weight mass |

| **Density** | |
|---|---|
| **{250}** | Start date |
| **{251}** | End date |
| **{252}** | Procedure |
| **{253}** | Standard liquid |
| **{254}** | Standard liquid density |
| **{255}** | Standard liquid temperature |
| **{256}** | Sinker volume |
| **{257}** | Determined density |
| **{258}** | Unit |
| **{259}** | Sample no. |
| **{260}** | Weighing 1 |
| **{261}** | Weighing 2 |
| **{263}** | Volume |
| **{264}** | Pycnometer mass |
| **{265}** | Pycnometer volume |
| **{266}** | Mass of steel standard |
| **{267}** | Mass of aluminum standard |
| **{268}** | Density of steel standard |
| **{269}** | Density of aluminum standard |

| **Animal weighing** | |
|---|---|
| **{295}** | Threshold |
| **{296}** | Averaging time |

| **Pipette calibration** | |
|---|---|
| **{340}** | Average volume |
| **{341}** | Systematic error |
| **{342}** | Random error |
| **{343}** | Tested volume |

| | |
|---|---|
| **{344}** | Systematic error [%] |
| **{345}** | Random error [%} |

| **Weighing B** | |
|---|---|
| **{365}** | Interval |
| **{366}** | Difference |
| **{367}** | Difference % |
| **{368}** | Residue % |
| **{369}** | Number |

| **Statistics** | |
|---|---|
| **{15}** | Number |
| **{16}** | Sum |
| **{17}** | Average |
| **{18}** | Minimum |
| **{19}** | Maximum |
| **{20}** | SDV_P |
| **{21}** | D |
| **{22}** | RDV_P |
| **{23}** | SDV_S |
| **{24}** | RDV_S |
| **{580}** | Unit |
| **{581}** | Amount due |
| **{582}** | Gross amount due |
| **{583}** | Sum |

| **ZZ Statistics** | |
|---|---|
| **{560}** | N |
| **{561}** | SUM |
| **{562}** | X |
| **{563}** | MIN |
| **{564}** | MAX |
| **{565}** | SDV.P |
| **{566}** | D |
| **{567}** | RDV.P |
| **{568}** | SDV.S |

| | |
|---|---|
| **{569}** | RDV.S |
| **{570}** | Unit |
| **{571}** | Amount due |
| **{572}** | Gross amount due |
| **{573}** | Gross sum |
| **{579}** | Number of measurements |

| **Adjustment history** | |
|---|---|
| **{210}** | Adjustment type |
| **{211}** | Nominal mass |
| **{212}** | Current mass |
| **{213}** | Difference |
| **{214}** | Temperature |
| **{215}** | Level status |
| **{216}** | Platform number |
| **{217}** | Nominal mass 2 |
| **{218}** | Current mass 2 |
| **{219}** | Last adjustment date and time |
| **{430}** | Difference 2 |
| **{431}** | Unit |

| **Reference weight** | |
|---|---|
| **{285}** [2)] | Name |
| **{286}** [2)] | Code |
| **{287}** [2)] | Class |
| **{288}** [2)] | Serial number |
| **{289}** [2)] | Mass |
| **{290}** [2)] | Set number |

| **Test weight** | |
|---|---|
| **{300}** [2)] | Name |
| **{301}** [2)] | Code |
| **{302}** [2)] | Class |
| **{303}** [2)] | Mass |
| **{304}** [2)] | Order number |
| **{305}** [2)] | Test weight number |

| Comparator | |
|---|---|
| **{190}** [2)] | Report no. |
| **{191}** [2)] | Start date |
| **{192}** [2)] | End date |
| **{193}** [2)] | Order number |
| **{194}** [2)] | Test weight number |
| **{195}** [2)] | Difference |
| **{196}** [2)] | List of measurements |
| **{197}** [2)] | Average difference |
| **{198}** [2)] | Standard deviation |
| **{199}** [2)] | Number of cycles |
| **{200}** [2)] | Method |
| **{201}** [2)] | Min temperature |
| **{202}** [2)] | Max temperature |
| **{203}** [2)] | Min humidity |
| **{204}** [2)] | Max humidity |
| **{205}** [2)] | Min pressure |
| **{206}** [2)] | Max pressure |
| **{207}** [2)] | Test weight |
| **{208}** [2)] | Selected task |
| **{209}** [2)] | Measurements |
| **{490}** [2)] | Reference weight position |
| **{491}** [2)] | Test weight position |
| **{492}** [2)] | Comparison plan |
| **{494}** [2)] | Mass |
| **{495}** [2)] | Minimum water temperature |
| **{496}** [2)] | Maximum water temperature |

| Reference weight adjustment | |
|---|---|
| **{520}** [2)] | Method |
| **{521}** [2)] | Start date |
| **{522}** [2)] | End date |
| **{523}** [2)] | Order number |
| **{524}** [2)] | Test weight number |
| **{525}** [2)] | Test weight |

| | |
|---|---|
| **{526}** [2)] | List of measurements |

| **Automatic feeder** | |
|---|---|
| **{220}** [2)] | Start date |
| **{221}** [2)] | End date |
| **{222}** [2)] | Batch no. |
| **{223}** [2)] | Average |
| **{224}** [2)] | Standard deviation |
| **{225}** [2)] | Reference weight quantity |
| **{226}** [2)] | Measurements |
| **{227}** [2)] | Report no. |
| **{228}** [2)] | T2- error value |
| **{229}** [2)] | T1- error value |
| **{230}** [2)] | T1+ error value |
| **{231}** [2)] | T2+ error value |
| **{232}** [2)] | T2- threshold |
| **{233}** [2)] | T1- threshold |
| **{234}** [2)] | T1+ threshold |
| **{235}** [2)] | T2+ threshold |
| **{236}** [2)] | T2- threshold value |
| **{237}** [2)] | T1- threshold value |
| **{238}** [2)] | T1+ threshold value |
| **{239}** [2)] | T2+ threshold value |
| **{240}** [2)] | Average in percents (DX) |
| **{241}** [2)] | Standard deviation in percents |
| **{242}** [2)] | T3- error quantity |
| **{243}** [2)] | T4- error quantity |
| **{244}** [2)] | T3+ error quantity |
| **{245}** [2)] | T4+ error quantity |
| **{246}** [2)] | T4- threshold |
| **{247}** [2)] | T3- threshold |
| **{248}** [2)] | T3+ threshold |
| **{249}** [2)] | T4+ threshold |
| **{455}** [2)] | T4- threshold value |
| **{456}** [2)] | T3- threshold value |
| **{457}** [2)] | T3+ threshold value |

| | |
|---|---|
| **{458}** [2] | T4+ threshold value |

| **Drying mode** | |
|---|---|
| **{380}**[2] | Name |
| **{381}**[2] | Code |

| **Drying process report** | |
|---|---|
| **{385}**[2] | Drying profile |
| **{386}**[2] | Drying profile parameters |
| **{387}**[2] | Finish mode |
| **{388}**[2] | Finish mode parameters |
| **{389}**[2] | Unit |
| **{390}**[2] | Printout time |
| **{391}**[2] | Prognosis |
| **{398}** [2] | Moisture analyzer: Status |

| **Moisture analyzer** | |
|---|---|
| **{395}**[2] | Set temperature |
| **{396}**[2] | Current temperature |
| **{397}**[2] | Drying time |
| **{398}**[2] | Status |
| **{399}**[2] | Drying time and result |
| **{400}**[2] | Humidity content |
| **{401}**[2] | Dry mass content |
| **{402}**[2] | Humid/dry |
| **{403}**[2] | Heater test – Power [%] |
| **{404}**[2] | Result control |
| **{407}**[2] | Drying chamber temperature |
| **{408}**[2] | Corrected result |
| **{409}**[2] | Drying result BIAS |
| **{410}**[2] | Prognosis |
| **{500}** [2] | Test |

| **Susceptibility** | |
|---|---|
| **{505}**[2] | Start date |
| **{506}**[2] | End date |
| **{507}**[2] | Reference weight class |

| | |
|---|---|
| **{508}**[2)] | Reference weight height |
| **{509}**[2)] | Reference weight diameter |
| **{510}**[2)] | Reference weight mass |
| **{511}**[2)] | Susceptibility |
| **{512}**[2)] | Polarization |
| **{513}**[2)] | Polarization status |
| **{514}**[2)] | Susceptibility status |
| **{515}**[2)] | Number of tested adjustment weights |
| **{516}**[2)] | Distance |
| **{517}**[2)] | Procedure |
| **{518}**[2)] | Mass susceptibility |
| **{519}**[2)] | Sample density |

| **BMI** | |
|---|---|
| **{610}**[2)] | Patient growth |
| **{611}**[2)] | Patient weight |
| **{612}**[2)] | BMI value |
| **{613}**[2)] | BMI status |
| **{614}**[2)] | Normal weight: MIN |
| **{615}**[2)] | Normal weight: MAX |

| | |
|---|---|
| **1)** | Format the variable {42} as follows: Platform 1 – {42:1}, Platform 2 – {42:2}. |
| **2)** | Variables not supported in the **Standard** software version. |
| **3)** | For {38}, {39} variables, each line in the database (1,2-n) must be formatted as follows: Line 1 – {38:1}, {39:1}; Line 2 – {38:2}, {39:2}, etc. |

## 1.2. Variable Formatting

You can format numeric variables, text variables and dates which are to be printed or displayed in the gray workspace.

**Formatting types:**

- variables with left justification,
- variables with right justification,
- determining quantity of characters for printing / displaying,
- determining quantity of decimal places for numeric variables,
- converting the format of date and hour,
- converting numeric variables into EAN13 code,
- converting numeric variables and date into EAN128 code.

## Special formatting characters:

| Character | Description | Example |
|---|---|---|
| **,** | Sign separating variable from format item. | **{7,10}** - Net weight value of fixed length (10 characters), given in an adjustment unit, right justification. |
| **-** | Minus sign or left justification. | **{7,-10}** - Net weight value of fixed length (10 characters), given in an adjustment unit, left justification. |
| **:** | Sign proceeding formatting or time separator (i.e. hours, minutes and seconds). | **{7:F3}** - Net weight value in an adjustment unit always with three decimal places.<br>**{3:hh:mm:ss 24H}** – Current time in format: hour : minute : second. |
| **F** | Either sign formatting digits to a string of "-ddd.ddd…" format (where: d - single digit, minus - for negative values only) or determination of decimal places quantity. | **{7:F2}** - Net weight value given in an adjustment unit, always with two decimal places.<br>{7,9:F2} - Net weight value of fixed length (9 characters), given in an adjustment unit, always with two decimal places, right justification. |
| **V** | Formatting mass and quantities being derivatives of mass in EAN13 code. | **{7:V6.3}** - Net weight value in a form of EAN13 code (6-character code) with three decimal places. |
| **T** | Formatting mass and quantities being derivatives of mass in EAN128 code. | **{7:T6.3}** - Net mass in a form of EAN128 code with three decimal places. |
| ***/*** | Date separator separating days, months and years. | **{2:yyyy/MM/dd}** – Current date in format: year/month/day. |
| **.** | Date separator separating days, months and years as well as time separator separating hours, minutes and seconds. | **{2:yyyy.MM.dd}** – Current date in format: year.month.day.<br>**{3:HH.mm.ss 24H}** – Current time in format: hour.minute.second. |
| **-** | „Dash" as a date separator separating days, months and years as well as time separator separating hours, minutes and seconds. | **{2:yyyy-MM-dd}** – Current date in format: year-month-day.<br>**{3:HH-mm-ss 24H}** – Current time in format: hour-minute-second. |

## Formatted variables application:

| CODE | DESCRIPTION |
|---|---|
| {6:V6.3} | Net weight value in current unit in EAN 13 code (6-digit code) |
| {6:V7.3} | Net weight value in current unit in EAN 13 code (7-digit code) |
| {7:V6.3} | Net weight value in adjustment unit in EAN 13 code (6-digit code) |
| {7:V7.3} | Net weight value in adjustment unit in EAN 13 code (7-digit code) |
| {8:V6.3} | Gross weight value in adjustment unit in EAN 13 code (6-digit code) |
| {8:V7.3} | Gross weight value in adjustment unit in EAN 13 code (7-digit code) |
| {16:V6.3} | C net weight value in EAN 13 code (6-digit code) |

| | |
|---|---|
| {16:V7.3} | C net weight value in EAN 13 code (7-digit code) |
| {571:V6.3} | C gross weight value in EAN 13 code (6-digit code) |
| {571:V7.3} | C gross weight value in EAN 13 code (7-digit code) |
| {146:V6.3} | Gross weight value in current unit in EAN 13 code (6-digit code) |
| {146:V7.3} | Gross weight value in current unit in EAN 13 code (7-digit code) |
| {27:V6.3} | Net amount due in EAN 13 code (6-character code) |
| {27:V7.3} | Net amount due in EAN 13 code (7-character code) |
| {30:V6.3} | Gross amount due in EAN 13 code (6-character code) |
| {30:V7.3} | Gross amount due in EAN 13 code (7-character code) |
| {581:V6.3} | C net amount due in EAN 13 code (6-character code) |
| {581:V7.3} | C net amount due in EAN 13 code (7-character code) |
| {6:T6.3} | Net weight value in current unit in EAN 128 code |
| {7:T6.3} | Net weight value in adjustment unit in EAN 128 code |
| {8:T6.3} | Gross weight value in adjustment unit in EAN 128 code |
| {16:T6.3} | C net amount due in EAN 13 code |
| {20:T6.3} | C gross amount due in EAN 13 code |
| {22:T6.3} | Net weight value (lb) in EAN 128 code |
| {55:T6.2} | Product price in EAN 128 code |
| {2:YYMMDD} | Date in EAN 128 code |
| {61:yyMMdd} | Product date in EAN 128 code |
| {62:YYMMDD} | Product expiry date in EAN 128 code |

## 2. ANNEX 02 – Label Template

The label template can be created in 2 ways:

- via scale, using available variables,
- via **LABEL EDITOR R02** PC software.

| | |
|---|---|
| ⚠ | ***For detailed description concerning creation of label template via PC software, read user manual of „Label Editor R02”.*** |

In order to work in label scale mode, assign a label with template to a particular product or customer.

## 2.1. Creation of Label Template via Scale

- Enter **<Databases / Printouts / Labels>** submenu and select respective entry.
- Enter **<Label template>**, an edit box **<Label template>** will pop up.
- Modify selected label design and confirm changes via →.

## 2.2. Sending Label Template to Scale Memory

- Copy label template with ***.lb** extension, using **„Label Editor R02”**, onto the USB flash drive.
- Connect USB flash drive to scale's USB port.
- Enter **< Databases / Printouts / Labels>** submenu and select respective entry.
- Enter **<Label template>**, an edit box **<Label template>** will pop up.
- Press (import) key, a flash drive mass memory box will pop up.
- Select the label template with ***.lb** extension, the scale program inserts selected template into the edit box.
- Press → key to confirm changes.

## 2.3. Assigning Label with a Template to a Product

- Enter **<Databases / Products>** submenu and select respective record.
- Enter **<Printout / Label>**, a base **<Printouts / Labels>** with a list of previously created items will be displayed.
- Select respective label, it is automatically assigned to a product.

## 2.4. Assigning Collective Label with a Template to a Product

- Enter **<Databases / Products>** submenu and select respective item.
- Enter **<Collective label>**, a base **<Printouts / Labels>** with a list of previously created items will be displayed.
- Select respective label, it is automatically assigned to a product.

## 2.5. Assigning Label with a Template to a Customer

- Enter **<Databases / Customers>** submenu and select respective item.
- Enter **<Printouts / Labels>**, a base **<Printouts / Labels>** with a list of previously created items will be displayed.
- Select respective label, it is automatically assigned to a customer.

### 2.6. Printing Label with a Template

- Go to the home screen, select a product or a customer with a label assigned from a database.
- Load the weighing pan, wait for a ◣◢ pictogram, press ↵ key.
- The label is printed via scale-connected printer.

| | |
|---|---|
| ⚠ | ***The label can be assigned to a product or a customer. Label template assigned to the most recently selected database entry (a product or a customer) is printed on a scale-connected printer upon pressing ↵ key.*** |

## 3. ANNEX 03 – RADWAG Printer Configuration

Scales cooperate with the following RADWAG thermal printer models: RTP-UEW80 and RTP-RU80. Depending on its version, the printer is supplied with the following connectors and communication interfaces:

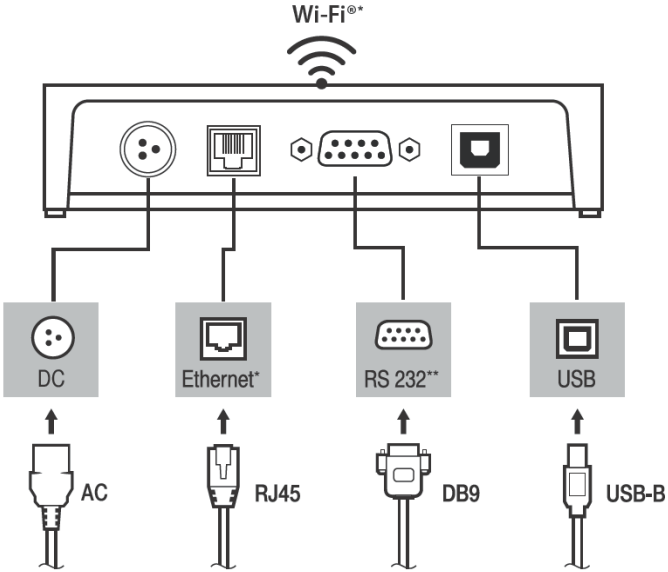


***)** – only in RTP-UEW80
****)** – only in RTP-RU80

For detailed description of printer configuration, please read the RADWAG printer manual available on http://www.radwag.com/.

## 3.1. Test Page Printout

Printers allow printing a test page that includes the following information: printer serial number, printer model, available interfaces, code page, paper cut function, etc.

In order to print the test page out, press and hold the key on the control panel and switch the printer on.

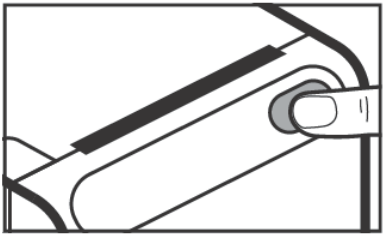

*Control panel key*

## 3.2. Serial Communication Parameters

The RS232 communication interface is available in the RTP-RU80 printer. The RS2323 port in the printer is the DB9 connector. In the printer, the following serial communication parameters are available:

| | |
|---|---|
| **Baud rate** | 9600 bit/s. |
| **Data bits** | 8 |
| **Stop bits** | 1 |
| **Parity** | None |

## 3.3. Paper Cut Function

To activate the paper cut function, send the relevant control code from the scale. The control code must be entered in the **<Suffix>** parameter in the **<Devices/Printer>** submenu.

Control code formulation: **1 d 5 6 4 1 0 8**

## 3.4. Changing printer code page

To change the printer code page, send the relevant control code from the scale. The control code must be entered in the **<Prefix>** parameter in the **<Devices / Printer>** submenu.

Control code formulation: **1 B 7 4 n**, where n – table item number below.

| n | Code page | n | Code page |
|---|---|---|---|
| 00 | CP437 [U.S.A., Standard Europe] | 24 | CP737 [Greek] |
| 01 | Katakana | 25 | WCP1257 [Baltic] |
| 02 | PC850 [Multilingual] | 26 | Thai 1 |
| 03 | PC860 [Portuguese] | 27 | CP720[Arabic] |
| 04 | PC863 [Canadian-French] | 28 | CP855 |
| 05 | PC865 [Nordic] | 29 | CP857[Turkish] |
| 06 | WCP1251 [Cyrillic] | 30 | WCP1250[Central Europe] |
| 07 | CP866 Cyrillic #2 | 31 | CP775 |
| 08 | MIK[Cyrillic / Bulgarian] | 32 | WCP1254[Turkish] |
| 09 | CP755 [East Europe, Latvian 2] | 33 | WCP1255[Hebrew] |
| 10 | Iran | 34 | WCP1256[Arabic] |
| 11 | reserve | 35 | WCP1258[Vietnam] |
| 12 | reserve | 36 | ISO-8859-2[Latin 2] |
| 13 | reserve | 37 | ISO-8859-3[Latin 3] |
| 14 | reserve | 38 | ISO-8859-4[Baltic] |
| 15 | CP862 [Hebrew] | 39 | ISO-8859-5[Cyrillic] |
| 16 | WCP1252 Latin I | 40 | ISO-8859-6[Arabic] |
| 17 | WCP1253 [Greek] | 41 | ISO-8859-7[Greek] |
| 18 | CP852 [Latina 2] | 42 | ISO-8859-8[Hebrew] |
| 19 | CP858 Multilingual Latin I +Euro) | 43 | ISO-8859-9[Turkish] |
| 20 | Iran II | 44 | ISO-8859-15 [Latin 3] |
| 21 | Latvian | 45 | Thai2 |
| 22 | CP864 [Arabic] | 46 | CP856 |
| 23 | ISO-8859-1 [West Europe] | | |

## 4. ANNEX 04 – ZEBRA Printer Configuration

| Transmission parameters | Printout data regarding RS232 |
|---|---|
| Baud rate – 9600 b/sec<br>Parity control – none<br>Bits qty – 8 bits<br>Stop bits – 1 bit | Serial port : **96, N, 8, 1** |

For detailed procedure specifying how to print info printout and how to modify printer settings read user manual of ZEBRA printers.

## 5. ANNEX 05 – Barcode Scanner Configuration

1. For communication with barcode scanners, RADWAG scales use RS232 interfaces and simplex transmission (one-way direction), without handshaking. For this purpose, use of second line of the cable is sufficient. Used scanners should be equipped with RS232 interface, both hardware and software handshaking must be disabled.
2. Transmission parameters can be set for both weighing devices and scanners. For both devices the following parameters must comply: baud rate, data bits quantity, parity control, stop bits quantity; e.g. 9600,8,N,1 – baud rate 9600 bit/s, data 8-bits, no parity control, 1 stop bit.
3. Barcode scanners can send additional information apart from the expected barcode e.g. symbology (type of barcode). Due to the fact that RADWAG devices and software do not use such information, it is advisable to disable it.
4. Some RADWAG systems can omit unnecessary coded information by using parameters that mark the beginning and the length of the code subjected to analysis.
5. A special protocol is required in order the code be received by RADWAG equipment. It is necessary to program an appropriate prefix and suffix. In RADWAG-adopted standard, the prefix is 01 sign (byte) hexadecimal format, the suffix is 0D sign (byte) hexadecimal format.
6. Most barcode scanners allow to enable/disable different symbologies (barcode types).
7. Programming of scanners is performed by reading special barcodes.
8. Scanners marketed together with RADWAG systems are always configured according to the rules above.

| **Barcode with required prefix and suffix in hexadecimal format** | **Barcode without required -fixes in ASCII format** | **Code type** |
|---|---|---|
| 01 30 30 32 31 30 31 32 36 0D | 00210126 | EAN-8 |
| 01 30 31 32 33 34 35 36 37 38 39 0D | 0123456789 | CODE 2 OF 5 |
| 01 43 4F 44 45 20 33 39 20 54 45 53 54 0D | CODE 39 TEST | CODE 39 |
| 01 31 31 30 31 32 33 34 35 36 37 38 39 31 0D | 1101234567891 | EAN-13 |
| 01 43 6F 64 65 20 31 32 38 20 54 65 73 74 0D | CODE 128 Test | CODE 128 |