USER GUIDE

MWLH 35

Radwag

Distributed by AKRIBIS

User manual

IMMU-18-06-10-24-EN

WEIGHING MODULES

Electromagnetic Weighing Modules:
MWSH
MWMH
MWLH

radwag.com
Scan the QR code to view additional scientific material that may be of interest to you.
There you will find more useful information in an accessible format!

AKRIBIS www.akribis.info contacto@akribis.info

OCTOBER 2024

PRECAUTIONS

Prior to installation, use or maintenance activities, carefully read this user manual and follow the provided guidelines.

	Modules can be operated and supervised only by the trained stuff.
	Prior to the first use, carefully read this user manual. Use the weighing device only as intended.
	Place weighed loads in the centre of the weighing pan.
	Load the weighing pan with loads of gross weight which does not exceed the maximum capacity.
	Mind not to leave heavy loads on the weighing pan for longer periods of time.
	Protect the device against considerable temperature variation, solar and UV radiation, substances causing chemical reactions.
	The device must not be operated in hazardous areas endangered with explosion of gases, and in dusty environments.
	In case of damage, immediately unplug the device from the mains.
	The device to be decommissioned must be decommissioned in accordance with valid legal regulations.

Contents

1. INTENDED USE 5
2. WARRANTY CONDITIONS 5
3. MAINTENANCE ACTIVITIES 6
3.1. Cleaning Stainless Steel Components 6
3.2. Cleaning Powder-Coated Components 6
3.3. Cleaning Aluminium Components 6
4. SERVICE AND REPAIR 7
5. RECYCLING 7
6. MECHANICAL DESIGN 8
6.1. Dimensions of the MWSH weighing module 8
6.2. Dimensions of the MWMH weighing module 9
6.3. Dimensions of the MWLH weighing module 11
6.4. Connectors 12
6.4.1. Connectors MWSH, MWLH Modules 12
6.4.2. Pins Arrangement MWSH, MWLH Modules 13
6.4.3. Connectors MWMH IP65H Module 14
6.4.4. Pins Arrangement MWMH IP65H Modules 14
6.4.5. MWMH IP69K Module Cable 15
6.4.6. Cable Topology of the MWMH IP69K Module 15
6.5. INPUTS / OUTPUTS 16
6.5.1. Technical Specifications 16
6.5.2. I/O Schematic Diagrams 17
6.6. Technical Specification 17
7. TRANSPORT AND STORAGE 17
7.1. Delivery Checklist 17
7.2. Packaging 17
8. INSTALLATION 17
8.1. Place of Use 17
8.2. Unpacking 18
8.3. Levelling 19
8.4. Electrical Connection 20
8.4.1. MWSH, MWLH Power Supply 20
9. USE AND CONFIGURATION 20
9.1. Communication with the Module 20
9.2. Default Communication Parameters 20
9.3. Module Configuration via MWMH-Manager 21
9.4. Integration with Weighing Indicators 21
9.5. Integration with R-LAB Program 21
10. ADJUSTMENT 22
10.1. Start Mass 22
11. WEIGHING 23
12. DIAGRAMS OF CONNECTION CABLES 24
12.1. MWSH, MWLH module connection cable diagrams 24
12.2. MWMH module connection cable diagrams 27
12.2.1. Version with Binder connectors 27
12.2.2. Version with cables fed through cable glands 28
13. ERROR MESSAGES 28

1. INTENDED USE

Professional electromagnetic high resolution modules are intended for use at mass measurement workstations. The modules are designed to be incorporated into customer's weighing systems requiring high IP (ingress protection), great weighing accuracy and high measurement speed. Brand new compact design allows the module to be adapted to various production and processing lines. It may be equipped with customer's weighing pan or conveyor. Signal cables led onto the weighing pan enable connecting automation system devices directly to the module without the need to use external electrical wiring (disturbing the weighing process).

2. WARRANTY CONDITIONS

A. RADWAG feels obliged to repair or exchange all elements that appear to be faulty by production or by construction.
B. Defining defects of unclear origin and means of their elimination can only be realized with assistance of the manufacturer and user representatives.
C. RADWAG does not bear any responsibility for damage or losses resulting from unauthorized or inadequate performing of production or service processes.
D. The warranty does not cover:
   - mechanical damage caused by product exploitation other than intended, damage of thermal and chemical origin, damage caused by lightning, overvoltage in the power network or other random event,
   - damage caused by product exploitation other than intended,
   - mechanical damage, if service claims removing or destroying security seal stickers which protect construction against unauthorized access,
   - damage caused by liquids and natural wear,
   - damage caused by inappropriate setting or by electrical wiring failures,
   - damage caused by overloading of the measuring system,
   - inappropriate cleaning habits.
E. Loss of warranty takes place if:
   - a repair is carried out outside RADWAG authorized service point,
   - service claims intrusion into mechanical or electronic construction by unauthorized people,
   - the platform does not bear Radwag security stickers.
F. For detailed warranty conditions read the warranty certificate.
G. Contact with the central authorized service: +48 (48) 386 63 30.

3. MAINTENANCE ACTIVITIES

In order to ensure safety in the course of cleaning, it is necessary to disconnect the device from the mains.

⚠	***While cleaning the weighing pan be careful so as not to damage the mechanism.***
⚠	***For maintenance use mild cleanser preventing corrosion.***
⚠	***Avoid directing strong stream of water directly onto weighing module's gasket membrane.***

3.1. Cleaning Stainless Steel Components

Avoid using cleansers containing any corrosive chemicals, e.g. bleach (including chlorine). Do not use products containing abrasive substances. Always remove the dirt using microfiber cloth to avoid damage of protective coating.

In case of a daily maintenance:
1. Remove the dirt using cloth dipped in warm water.
2. For best results, add a little dishwashing detergent.

3.2. Cleaning Powder-Coated Components

For preliminary cleaning stage you need running water or wet sponge featuring large holes, this will help you to remove loose, heavy dirt.

Do not use products containing abrasive substances.

Next, using cloth and cleanser-water solution (soap, dishwashing liquid) gently rub the cleaned surface. Avoid using cleanser without water since it may result with damage of the cleaned surface, please mind that large amount of water mixed with cleanser is a must.

3.3. Cleaning Aluminium Components

While cleaning aluminium components use products acid by nature, e.g. spirit vinegar, lemon. Do not use products containing abrasive substances. Avoid using hard brush, this may cause scratches. It is recommended to use microfibre cloth.

While polishing the surface use circular movements. Use clean, dry cloth. For best results, add a little dishwashing detergent.

4. SERVICE AND REPAIR

⚠	***In case of any sign of damage, it is necessary to disconnect the device form the mains immediately. The damaged component must be replaced or repaired by RADWAG service directly.***

In case of any problems with correct operation of the weighing module, contact the closest manufacturer's service point.

In case of defects, deliver the faulty product to the manufacturer's service point. If the product cannot be delivered to the manufacturer's service point, call the service and report the defect. Repair scope and method will be set up.

⚠	***The user is NOT ALLOWED to carry out any kind of repair of the device himself/herself. Any attempt of scale modification, repair etc., by unauthorized persons, will result with loss of validity of manufacturer-issued certificates, declarations and warranty.***

5. RECYCLING

Weighing modules must be recycled, they are not to be treated as a regular household waste. Scales to be decommissioned must be decommissioned in accordance with valid legal regulations.

6. MECHANICAL DESIGN

6.1. Dimensions of the MWSH weighing module

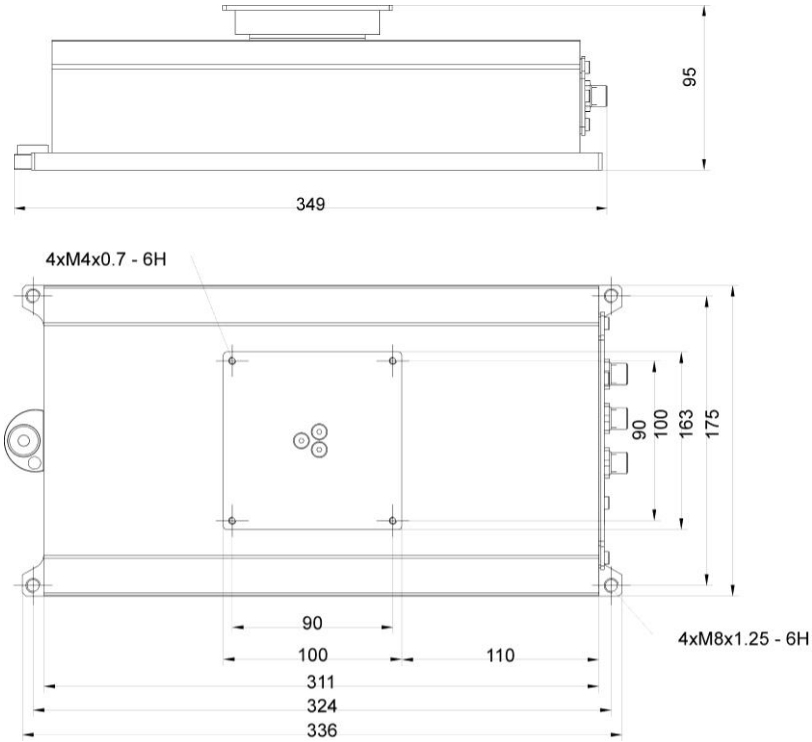

Dimensions of the MWSH weighing module

6.2. Dimensions of the MWMH weighing module

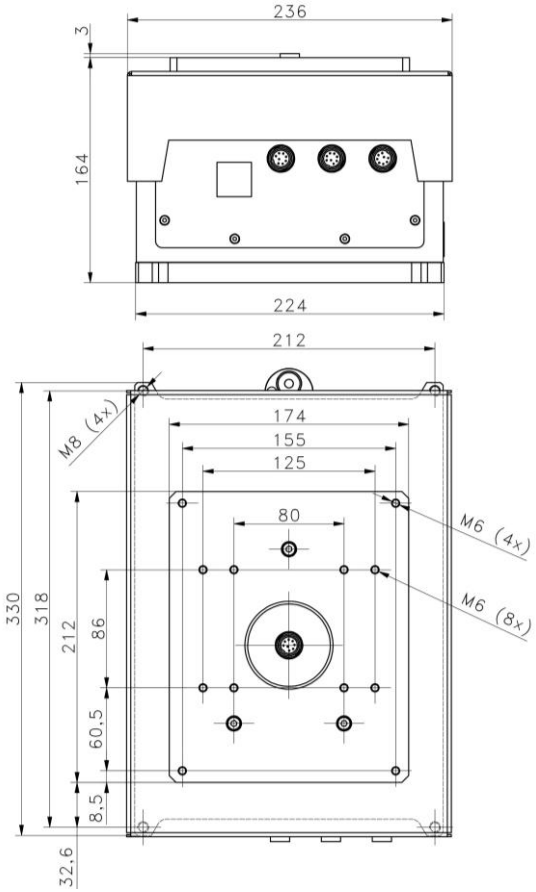

Dimensions of the MWMH IP65H weighing module

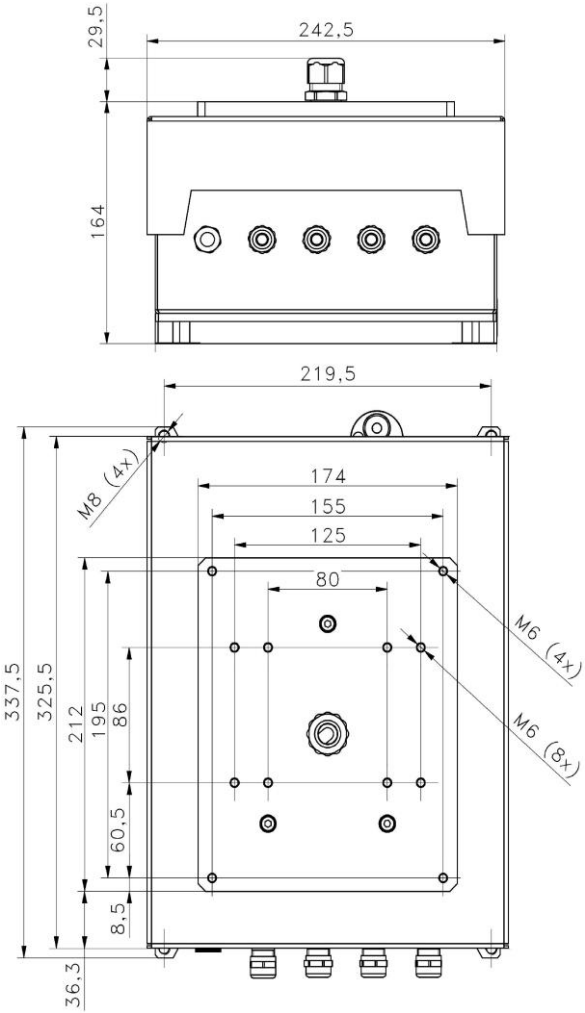

Dimensions of the MWMH IP69K weighing module

6.3. Dimensions of the MWLH weighing module

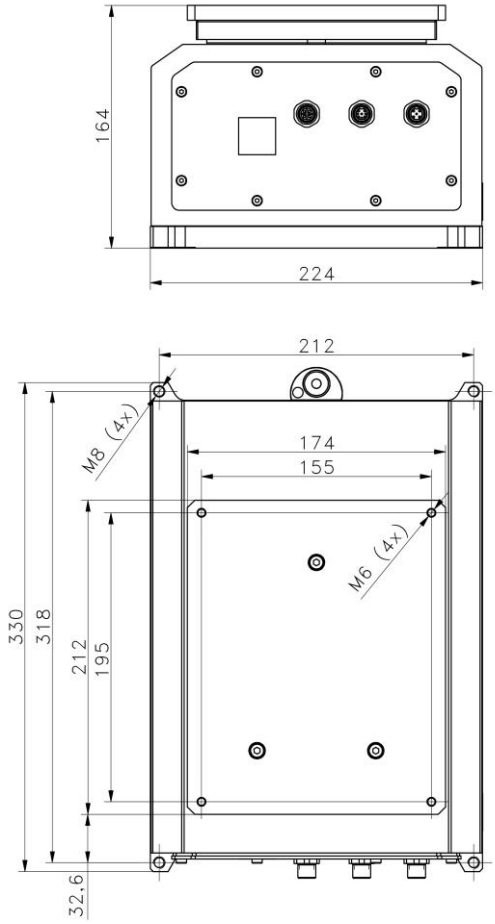

Dimensions of the MWLH IP65 weighing module

6.4. Connectors

6.4.1. Connectors MWSH, MWLH Modules

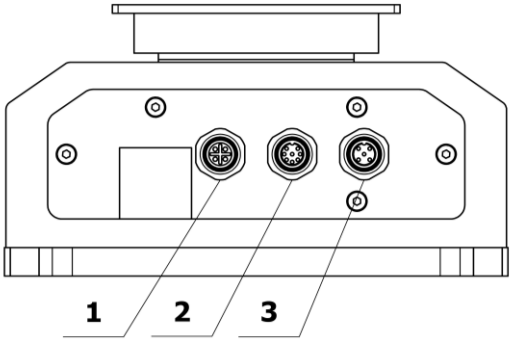

Standard version	
1	ETHERNET connector - 21033712403 (Harting)
2	IN/OUT connector - M12 8P
3	RS232, RS485 + power supply connector - M12 8P
Profinet version	
1	None
2	PROFINET connector - RJ45
3	RS232, RS485 + power supply connector - M12 8P
Profibus version *	
1	Profibus IN connector - M12 5P pin B coded are installed (for PROFIBUS DP)
2	Profibus OUT connector ** - M12 5P pin B coded are installed (for PROFIBUS DP)
3	RS232 + power supply connector - M12 8P
HY10, PUE 5, PUE 7.1 versions	
1	None
2	IN/OUT connector - M12 8P
3	RS232, RS485 + power supply connector - M12 8P

***)** - Module version with Profibus is not equipped with RS485, digital In/Out and Ethernet.
****)** - Voltage on a Profibus OUT connector is 5V DC, this provides correct operation of a terminator.

6.4.2. Pins Arrangement MWSH, MWLH Modules

ETHERNET	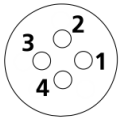	Pin1 – RX+ Pin2 – TX+ Pin3 – RX- Pin4 – Tx-
RS232 RS485 Power supply	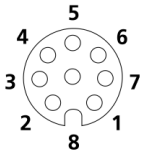	Pin1 – B Pin2 – RxD Pin3 – TxD Pin4 – A Pin5 – GND RS Pin6 – NC Pin7 – GND Pin8 – VCC
INPUTS OUTPUTS	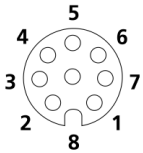	Pin1 – IN6 Pin2 – IN5 Pin3 – NC Pin4 – OUT6 Pin5 – OUT5 Pin6 – NC Pin7 – GNDIO Pin8 – VCCIO
PROFINET		RJ45 connector
PROFIBUS IN (female)	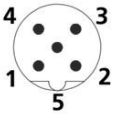	Pin1 – NC Pin2 – A Pin3 – NC Pin4 – B Pin5 – NC
PROFIBUS OUT (male)	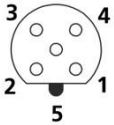	Pin1 – +V Pin2 – A Pin3 – GND Pin4 – B Pin5 – NC
RS232 Power supply	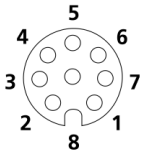	Pin1 – B Pin2 – RxD Pin3 – TxD Pin4 – A Pin5 – GND RS Pin6 – NC Pin7 – GND Pin8 – VCC

6.4.3. Connectors MWMH IP65H Module

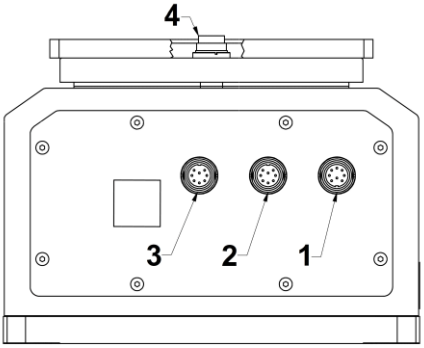

1	IN/OUT + power supply connector – Binder 09-0131-80-12
2	RS232 + ETHERNET connector – Binder 09-0127-80-07
3 and 4	Connectors leading the electric signal onto the weighing pan (option) - Binder 09-0173-80-08

6.4.4. Pins Arrangement MWMH IP65H Modules

INPUTS OUTPUTS Power supply	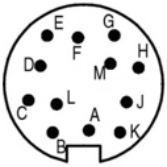	A - IN1 B - GND Module C - VCC Module D - Not used E - OUT 1 F - OUT 2 G - VCC Input/Output H - GND Input/Output I - Not used J - IN 2 K - Not used L - Not used M - Not used
RS232 ETHERNET	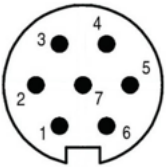	1 - RS232 Tx 2 - Ethernet Tx - 3 - Ethernet Tx + 4 - Ethernet Rx - 5 - Ethernet Rx + 6 - RS232 Rx 7 - RS232 GND
Connectors leading the electric signal onto the weighing pan (option)	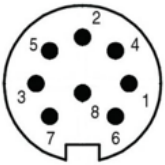	1 - Power supply 2 - Control 3 - Control 4 - Control 5 - Control 6 - Not used 7 - Power supply 8 - Power supply

Connector No. 3 is internally connected with connector No. 4 located on the weighing pan. The connectors send electrical signals onto the weighing platform. With this solution it is possible to control automation systems that are installed directly on the weighing pan. External electrical wiring, disturbing the weighing process, is no longer needed. Pins 2 - 5 connect control signals. Pins 1, 8 and 7 power the installed equipment. Pins 1 and 8 are electrically connected inside of the module.

Max voltage for connectors 3 and 4	24V DC, 12V AC
Max current for connectors 3 and 4	Pins 2-5 200mA, Pins 1,8 i 7 5A

6.4.5. MWMH IP69K Module Cable

All outgoing cables are approximately 2m long. Cables passing through SKINTOP M16x1.5 and M20x1.5 glands.

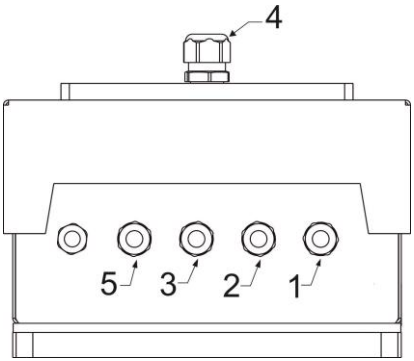

1	IN/OUT + power supply cable
2	RS232, ETHERNET cable - Binder 09-0127-80-07
3 and 4	Electrical signal output to the weighing pan (option)
5	PROFINET cable

6.4.6. Cable Topology of the MWMH IP69K Module

RS232, ETHERNET	brown - TxD grey – Tx- white – Tx+ pink – Rx+ blue – Rx- yellow - RxD green - GND

INPUTS/OUTPUTS Power supply	white - IN1 brown - GND green - VCC Module yellow - OUT 1 grey - OUT 2 pink - VCC Input/Output blue - GND Input/Output
Electrical signal output to the weighing pan (option)	pink - Power supply GNDM blue - Control grey - Control white - Control green - Control brown - Power supply (24V) yellow – Power supply (GNDM)
PROFINET	Cable terminated with RJ45

Cable No. 3 is internally connected with cable No. 4 located on the weighing pan. The cables send electrical signals onto the weighing platform. With this solution it is possible to control automation systems that are installed directly on the weighing pan. External electrical wiring, disturbing the weighing process, is no longer needed. Cable wires: blue, grey, white, green, are intended for connecting control signals. Cable wires: pink, yellow and brown, power the installed equipment. Cable wires pink and yellow are electrically connected inside of the module.

6.5. INPUTS / OUTPUTS

The basic version of the weighing module is equipped with 2 optoisolated inputs and 2 transistor optoisolated outputs.

6.5.1. Technical Specifications

Output parameters	
Output quantity	2
Output type	Transistor optoisolated
Maximum output current	100mA
Maximum output voltage	12 -24VDC
Input parameters	
Input quantity	2
Input type	Optoisolated
Voltage range	12 -24VDC

6.5.2. I/O Schematic Diagrams

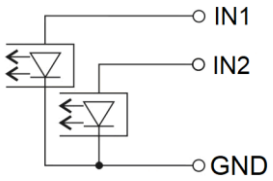	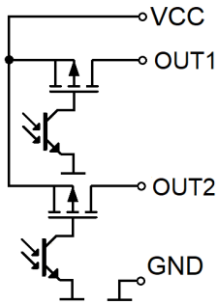
2 inputs	*2 outputs*

6.6. Technical Specification

For technical specifications of respective weighing modules go to RADWAG website www.radwag.com.

7. TRANSPORT AND STORAGE

7.1. Delivery Checklist

Upon delivery it is necessary to check the package and the device. Make sure that your package and the instrument bear no signs of damage.

7.2. Packaging

Keep all package elements should your device be transported in the future. Remember that only original packaging can be used for shipping purposes. Prior packing, uncouple any cables, remove any separable components (weighing pan, shields, inserts). The device components must be packed into an original packaging providing protection against potential damage during transportation.

8. INSTALLATION

8.1. Place of Use

- Make sure that the ambient temperature ranges between: +10°C ÷ +40°C.
- Make sure that the relative humidity is not higher than 80%.
- Make sure that temperature change in the course of operation is not rapid.

- Ground the module's base should the static electricity affect the weighing result.
- Install the module on a stable vibration-free construction, away from heat sources and magnetic field.
- The module and its weighing pan have to be shielded against air drafts.
- In case of modules stored in temperature that significantly differs from the temperature in the place of installation, wait until the module reaches temperature stabilization.

8.2. Unpacking

Cut the adhesive tape. Take the device out of the packaging. Be particularly careful while unpacking the device and installing its components so as not to cause any damages to the module mechanism.

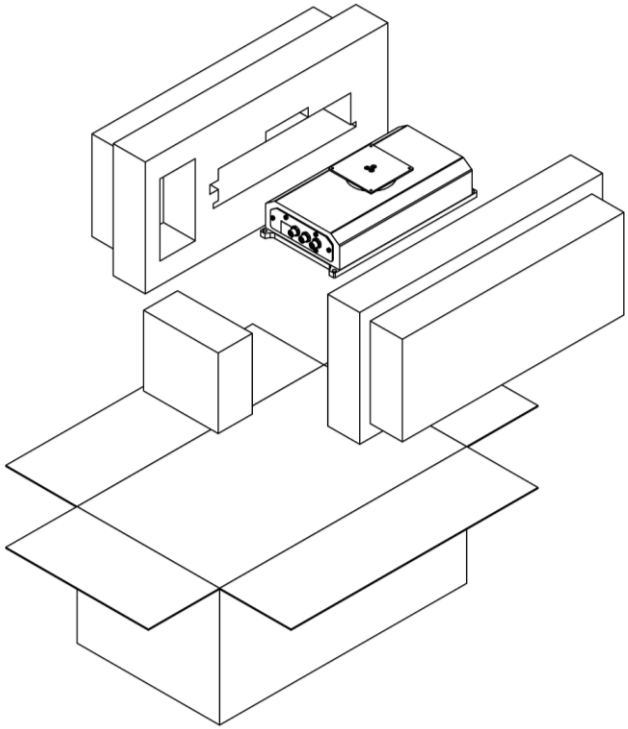

MWSH Module

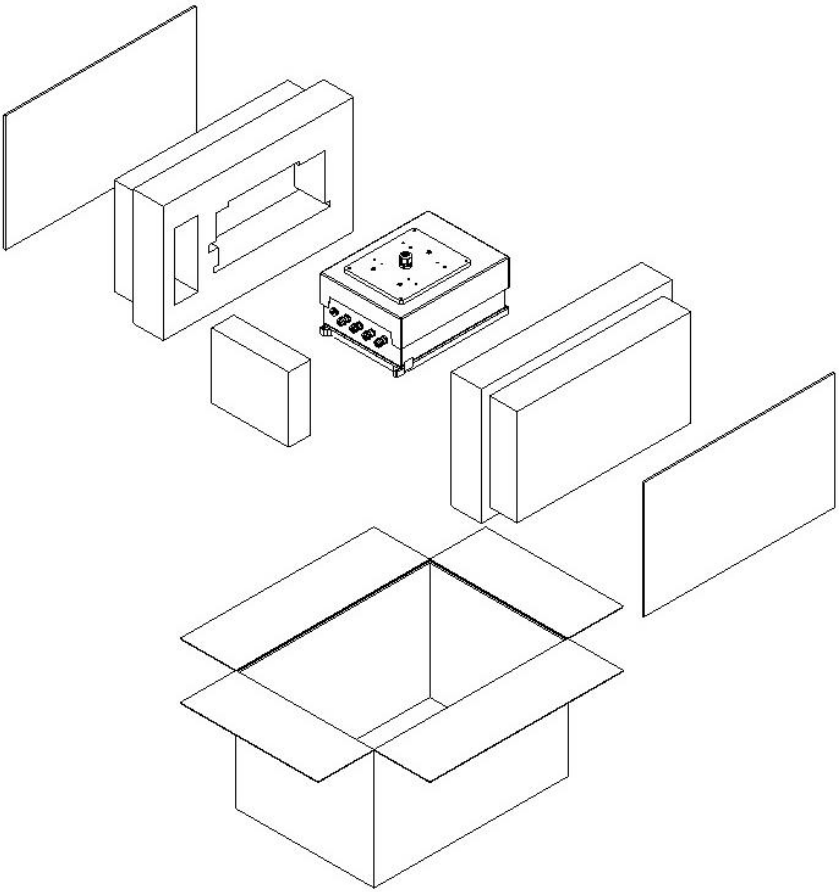

MWMH / MWLH Modules

8.3. Levelling

Upon placing the weighing instrument at the workstation, carry out levelling. To level the device turn its feet, keep turning the feet until the air bubble takes central position.

8.4. Electrical Connection

Upon completed mechanical installation, carry out electrical connections. Depending on the preferred communication type, connect respective communication cables to the appropriate connector. It is recommended to use original communication cables supplied by RADWAG. Nominal voltage of the power supply (specified on the power supply data plate) has to be compatible with the mains nominal voltage.

8.4.1. MWSH, MWLH Power Supply

To supply modules use SYS-1544-2415-T3-HRP power supply. In case of communication via PT0348 or PT0375 cables, the power supply has to be plugged to the connector that terminates the cable. In case of communication via Ethernet or Profibus, the power supply has to be plugged directly to the connector No.3.

9. USE AND CONFIGURATION

9.1. Communication with the Module

RADWAG-manufactured electromagnetic modules can communicate with weighing indicators, computer applications and industrial controllers via RS232, RS485, Ethernet, Profibus and Profinet connectors.

Standard version of the module additionally features digital 2IN and 2OUT which enable taring, zeroing, dosing start and stop, and signaling of the weighing thresholds.

9.2. Default Communication Parameters

RS 232	
Baud rate	57600
Data bits	8
Parity	None
Stop bits	1
RS 485	
Baud rate	57600
Data bits	8
Parity	None
Stop bits	1
Module address	1

TCP/IP	
IP address	192.168.0.2
Subnet mask	255.255.255.0
Default gateway	192.168.0.1
Port	4001

9.3. Module Configuration via MWMH-Manager

<MWMH-Manager> is a computer software, operating in MS Windows environment, intended for operation and configuration of parameters of MWSH, MWMH, MWLH electromagnetic weighing modules. The program enables: mass readout, taring, zeroing, filters setting, adjustment, communication parameters configuration, simulation of digital inputs and outputs. **<MWMH-Manager>** software communicates with the modules via RS232, RS485 and TCP/IP.

⚠	***The procedure of communication establishing and a detailed description of connection between the weighing module and the <MWMH-Manager> software is to be found in the software user manual.***

9.4. Integration with Weighing Indicators

Electromagnetic weighing modules are compatible with the following indicators: PUE HY10, PUE 5 and PUE 7.1. Communication between the devices is established via RS232, RS485 and Ethernet connectors. A set comprising the weighing module and the indicator makes a high resolution weighing instrument offering applications intended for industry. The weighing indicator enables unlimited access to module parameters and allows carrying out adjustment procedure.

9.5. Integration with R-LAB Program

R-LAB program is a computer application that enables readout of mass values from connected modules, collection of measurements, taring and zeroing. The program connects with the module via RS232 and Ethernet.

10. ADJUSTMENT

In order to ensure high weighing accuracy, it is necessary to correct indications periodically against a mass standard, this requires entering a corrective factor to module memory. Adjustment has to be carried out before weighing, after a long break between measurement series or in case of rapid ambient temperature change. The adjustment has to be carried out when the weighing pan is unloaded and working conditions are stable (no drafts and vibrations). If one of the above conditions is not fulfilled, an error message is displayed. In such case, unload the weighing pan or eliminate other distorting factors and repeat the adjustment. Do not use the module until the adjustment is carried out. In the course of the adjustment follow the displayed messages. In case of modules equipped with an internal weight, the adjustment can be carried out using either this weight or an external one. Modules not equipped with an internal weight can only be adjusted using external weight.

There are three types of adjustment:

- adjustment performed using an external weight,
- automatic internal adjustment initiated by the module,
- internal adjustment initiated by an operator.

The adjustment performed using an external weight can be carried out via:

- MWMH-Manager - program for platforms and modules operation,
- weighing indicator connected to the module.

Internal adjustment can be initiated by:

- MWMH-Manager - program for platforms and modules operation,
- weighing indicator connected to the module,
- IC command of the communication protocol,
- command of the Profibus protocol,
- command of the Modbus protocol.

!	***Verified modules cannot be adjusted using an external weight.***

10.1. Start Mass

You can determine zero point of an electromagnetic weighing module. This option is used in case of applying an additional conveyor, or container, that permanently loads the module. Determining start mass with an additional load does not reduce module's maximum capacity.

Option is available via:

- <MWMH-Manager> - program for platforms and modules operation,
- weighing indicator connected to the module.

	Determination of start mass carried out by an operator is not possible in case of verified modules.

11. WEIGHING

To assure long-term operation and correct mass measurements, follow the rules presented below:

Load the weighing pan steadily, avoid mechanical shocks.	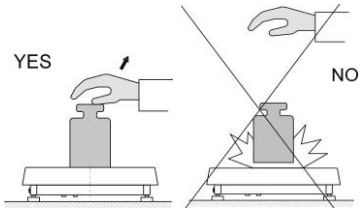
Place weighed loads centrally on the weighing pan (eccentricity errors are specified by EN 45501 standard, point 3.6.2.).	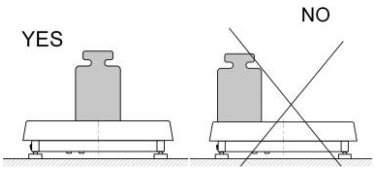
Do not apply concentrated force (total load in one point).	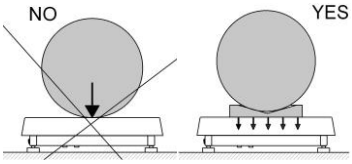
Avoid side loading, in particular side shocks.	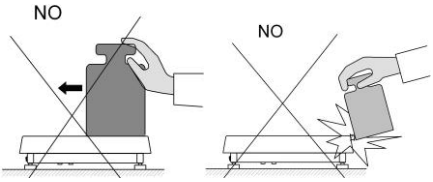

In case of eccentric loading make sure that: a) the weight of loads placed close to one of the pan edges does not exceed ½ of the max capacity, b) the weight of loads placed in the pan corner does not exceed 1/3 of the max capacity.	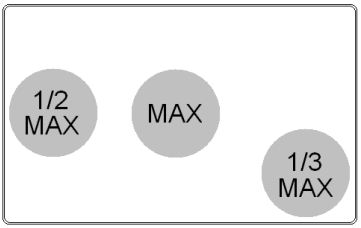

12. DIAGRAMS OF CONNECTION CABLES

12.1. MWSH, MWLH module connection cable diagrams

PT0348

RS232 cable: HRP - Computer

PT0375

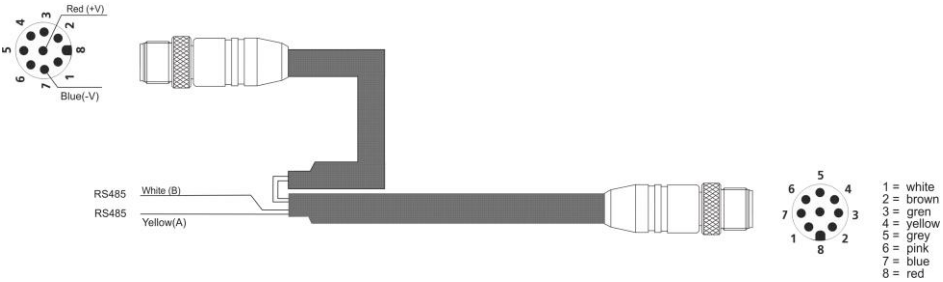

RS485 cable: HRP

PT0302

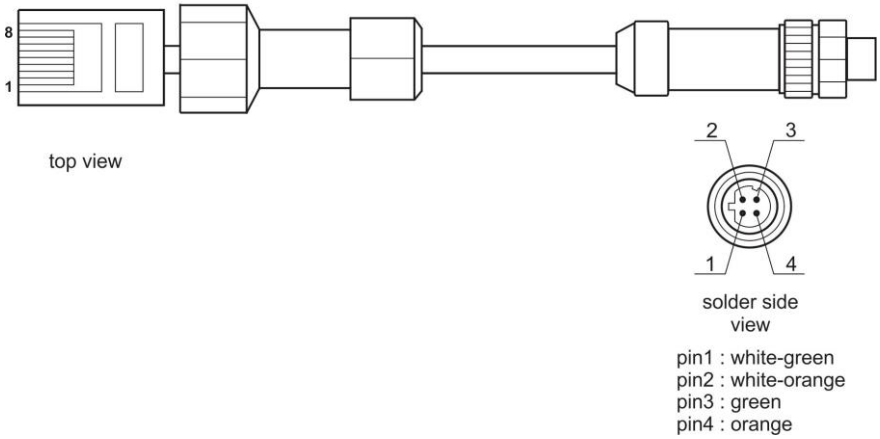

Ethernet cable: HRP – PUE HY10, PUE 5

PT0303

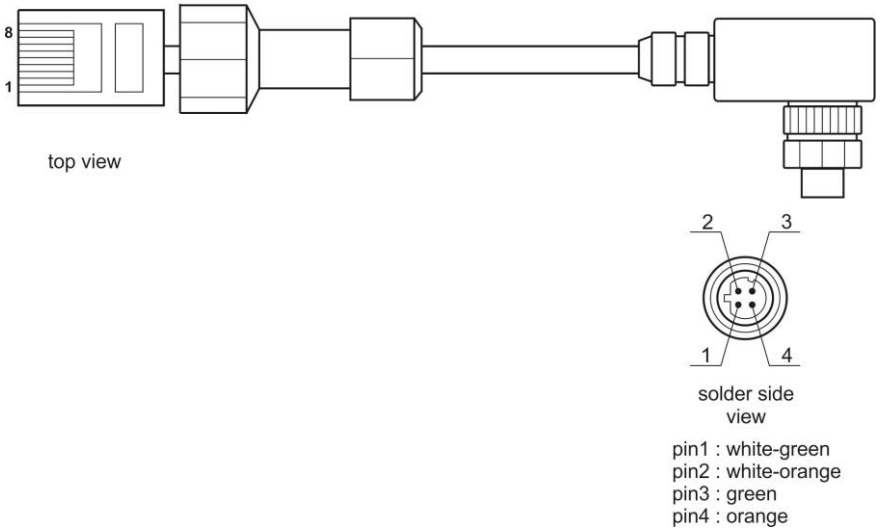

Ethernet cable: HRP – PUE HY10, PUE 5

PT0347

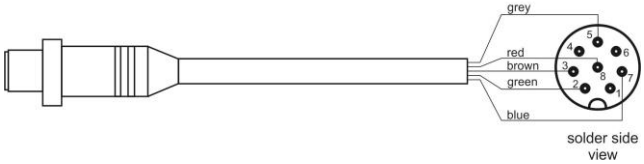

RS232 cable: HRP – PUE HY10, PUE 5 + power supply

P0198

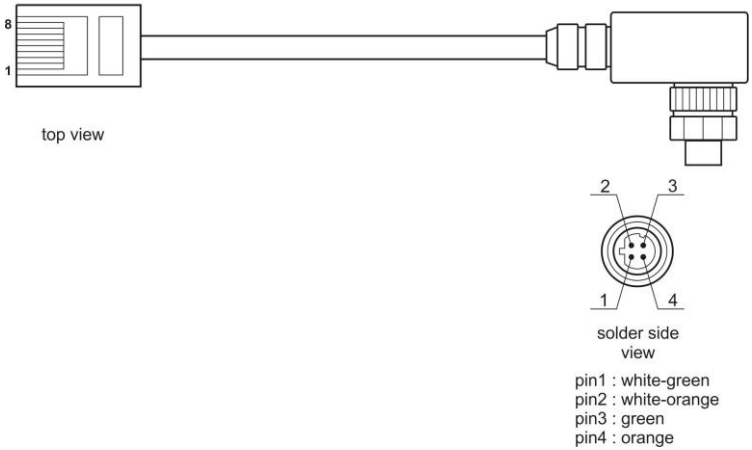

Ethernet cable: HRP - Ethernet Switch, PUE 7.1

PT0256

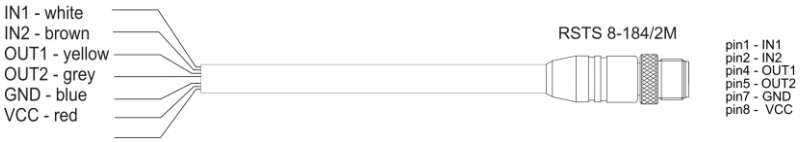

IN/OUT cable: HRP

⚠	***Colours of wires for cable of M12 standard. The figure presents exemplary cable type.***

12.2. MWMH module connection cable diagrams

12.2.1. Version with Binder connectors

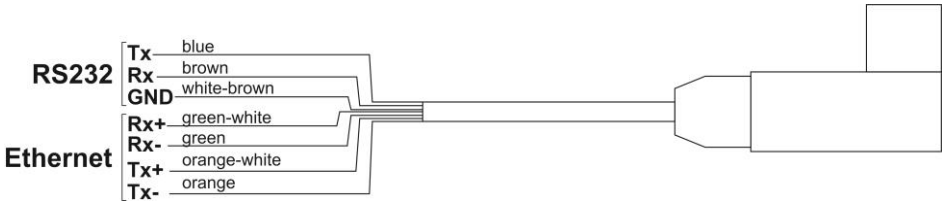

RS232 + Ethernet Cable

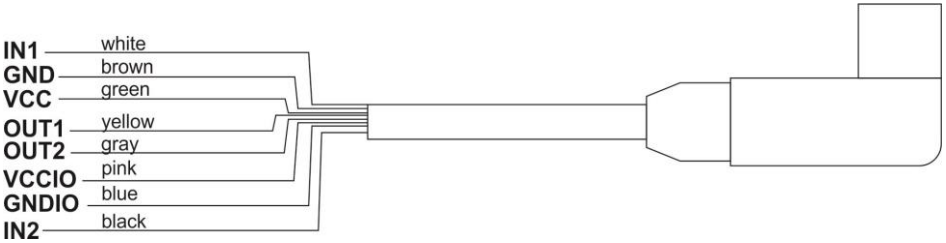

IN/OUT + Power Supply Cable

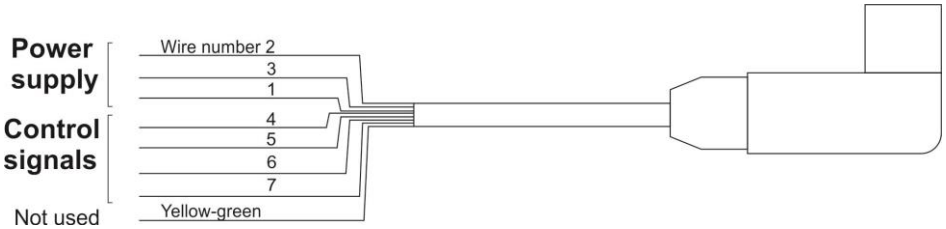

Cable for connectors 3 and 4

Maximum permissible voltage used to supply and control the device via cable connected to connectors 3 and 4 is 24V DC and 12V AC. Maximum current is 5 A for wires 1,3 and 2, and 200 mA for wires 4,5,6. Wires 1 and 3 are electrically connected inside of the module.

12.2.2. Version with cables fed through cable glands

Description of cables RS232 + Ethernet and IN/OUT + Power supply is the same as in case of version equipped with connectors.

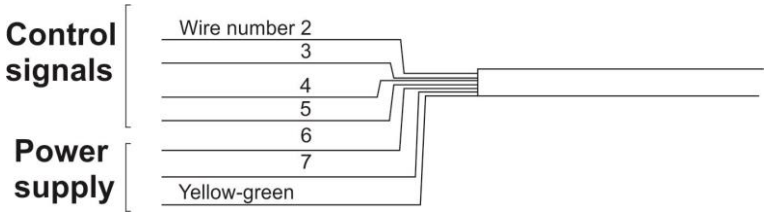

Cable for connectors 3 and 4

Maximum permissible voltage used to supply and control the device via cable fed through cable glands 3 and 4 is 24V DC and 12V AC. Maximum current is 5 A for wires 6 and 7,8, and 200 mA for wires 2,3,4 and 5. Wire 7 and yellow-green wire are electrically connected inside of the module.

13. ERROR MESSAGES

-Err2-	Value out of zero range.
-Err3-	Value out of tare range.
-Err8-	Zeroing/taring time out of range.
-NULL-	Zero value from converter.
-FULL-	Measuring range (Max. capacity) exceeded.
-LH-	Start mass error.