USER GUIDE

MMT310

Vaisala · Authorized Partner

Distributed by AKRIBIS

VAISALA

USER'S GUIDE

Vaisala HUMICAP® Moisture and Temperature Transmitter Series for Oil MMT310

M210474EN-D

AKRIBIS · www.akribis.info · contacto@akribis.info

PUBLISHED BY

Vaisala Oyj
Street address: Vanha Nurmijärventie 21, FI-01670 Vantaa, Finland
Mailing address: P.O. Box 26, FI-00421 Helsinki, Finland
Phone: +358 9 8949 1
Fax: +358 9 8949 2227

Visit our Internet pages at www.vaisala.com.

© Vaisala 2015

No part of this manual may be reproduced, published or publicly displayed in any form or by any means, electronic or mechanical (including photocopying), nor may its contents be modified, translated, adapted, sold or disclosed to a third party without prior written permission of the copyright holder. Translated manuals and translated portions of multilingual documents are based on the original English versions. In ambiguous cases, the English versions are applicable, not the translations.

The contents of this manual are subject to change without prior notice.

This manual does not create any legally binding obligations for Vaisala towards customers or end users. All legally binding obligations and agreements are included exclusively in the applicable supply contract or the General Conditions of Sale and General Conditions of Service of Vaisala.

Table of Contents

CHAPTER 1
GENERAL INFORMATION 7
About This Manual 7
Contents of This Manual 7
Version Information 8
Related Manuals 8
Documentation Conventions 8
Safety 9
ESD Protection 9
Recycling 10
Regulatory Compliances 10
Emissions 10
Immunity 10
Trademarks 10
Software License 11
Warranty 11

CHAPTER 2
PRODUCT OVERVIEW 13
Introduction to MMT310 Series 13
MMT310 Transmitter Parts 15
Probe Options 16
Filter Options 16

CHAPTER 3
INSTALLATION 17
Mounting 17
Selecting a Place for the Probe 17
Mounting the Transmitter/Removing the Transmitter Unit .. 18
Mounting the Transmitter with Optional Rain Shield 19
Mounting the Rain Shield with Larger Transmitter Mounting Plate 19
Mounting the MMT318 20
Mounting for Pressurized Pipelines/Oils 20
Tightening the Clasp Nut 21
Ball Valve Installation Kit for MMT318 23
Sampling Cell for MMT318 25
Mounting the MMT317 25
MMT317 Probe with Swagelok Connector for Tight-place Installations 26
Connections 28
Cable Wiring 28
Power Supply Requirements 29

CHAPTER 4

AKRIBIS · www.akribis.info · contacto@akribis.info

OPERATION **31**
Power Supply **31**
Transmitter Start-Up **31**
Serial Line and Analog Communication Options **32**
RS-232 Serial Port Connection 32
USB Connection 33
Installing the Driver for the USB Cable 33
Connection to an MI70 Hand-held Indicator 34
Terminal Program Settings **35**
Opening a Serial/USB Connection with PuTTY 35
List of Serial Commands **36**
Measurement Output **38**
Starting the Continuous Reading Output 38
Stopping the Continuous Reading Output 38
Set Continuous Output Interval for RUN Mode 38
Output Reading Once 39
Set Serial Interface Mode 39
Serial Line Settings 40
Set Transmitter Address for Use in POLL Mode 40
Temporarily Open Transmitter from POLL Mode to Receive Serial Commands 41
Set Transmitter in POLL Mode 41
Output Formatting **42**
Set Serial Output Format 42
Set Time and Date 43
Add Time and Date to SEND and R Outputs 43
Select Metric or Nonmetric Output Units 44
Setting, Scaling and Testing the Analog Outputs **44**
Set Analog Outputs 44
Select Parameter for Analog Outputs 45
Scale Analog Outputs 46
Test Analog Outputs 46
Test Analog Outputs for Desired Readings 47
Set Error Outputs 47
Other Commands **48**
Check Transmitter Settings 48
Serial Bus Echo 49
All Devices in POLL Mode Send Their Addresses 49
List Commands 49
Set Result Filtering 49
Reset Transmitter 50
Display Error Messages 50

CHAPTER 5
MAINTENANCE **51**
Periodic Maintenance **51**
Calibration Interval 51
Replacing Consumables **51**
Changing the Filter 51
Changing the Sensor 52
Clean the Sensor Before Storing the Transmitter **53**
Technical Support **53**

AKRIBIS · www.akribis.info · contacto@akribis.info

CHAPTER 6

CALIBRATION AND ADJUSTMENT 55
Preparations Before the Calibration 56
Relative Humidity Calibration and Adjustment (in Two Points) 56
Low End Adjustment 57
High End Adjustment 58
Temperature Calibration and Adjustment (in One Point) 59
Revert Factory Calibration 60
View Current Offset and Gain Adjustment 60
Relative Humidity Calibration after Sensor Change 61
Set Calibration Information Text 61
Set Calibration Date 61
Analog Output Calibration 62
Adjustment Using an MI70 Indicator 62
Starting MI70 Adjustment 62
Adjusting RH with MI70 63
1-point RH Adjustment 63
2-point RH Adjustment 63
LiCl – NaCl Automatic Adjustment 64
Adjusting T with MI70 65
1-point T adjustment 65
2-point T adjustment 65
Environment Settings 66
Last Adjustment Date 66

CHAPTER 7

TECHNICAL DATA 67
Specifications 67
Spare Parts and Accessories 69
Dimensions in mm (inches) 70
Transmitter Enclosure and Mounting Plates 70
Rain Shield Dimensions 71
MMT318 Probe Dimensions 72
Ball Valve Set Dimensions 73
MMT317 Probe with Optional Swagelok Connector, Dimensions 74

APPENDIX A

APPLICATIONS 75
Transformer Oils 75
PPM Calculation for Transformer Oils 76
Calculation Model with Average Coefficients 77
Calculation Model with Oil Specific Coefficients 77
PPM Calculation Setting 78
Calculation Setting (Calculation Model with Average Coefficients) 78
Changing the Calculation Coefficients (Calculation Model with Oil Specific Coefficients) 78
Technical Data 79
Paper Machine Application 80

AKRIBIS · www.akribis.info · contacto@akribis.info

List of Figures

Figure 1 MMT310 Transmitter Parts 15
Figure 2 MMT310 Probes 16
Figure 3 Mounting with Mounting Plates 18
Figure 4 Rain Shield with Large Mounting Plate 19
Figure 5 MMT318 Probe 20
Figure 6 Sealing of Fitting Body into Process 21
Figure 7 Tightening the Clasp Nut 22
Figure 8 MMT318 Ball Valve Assembly Installation 23
Figure 9 Sampling Cell DMT242SC2 25
Figure 10 MMT317 Probe with Swagelok Installation Kit 26
Figure 11 MMT317 Probe Installation to Pipeline with Swagelok Installation Kit 26
Figure 12 8-Pin Connector (Left) and Screw Terminal Connector (Right) 28
Figure 13 PuTTY Serial Line Configuration 35
Figure 14 Changing the Sensor 52
Figure 15 Location of Adjustment Button 56
Figure 16 Transmitter Enclosure and Mounting Plate Dimensions 70
Figure 17 Rain Shield Dimensions (Back) 71
Figure 18 Rain Shield Dimensions (Side and Outer) 71
Figure 19 MMT318 Probe Dimensions 72
Figure 20 Ball Valve Set Dimensions 73
Figure 21 MMT317 Probe with Swagelok Connector 74
Figure 22 The Water Solubility of Transformer Oils Versus Temperature 76
Figure 23 Maximum Errors Caused by Deviation of Mineral Oils Using Calculation Model with Average Coefficients 79

List of Tables

Table 1 Manual Revisions 8
Table 2 Related Manuals 8
Table 3 MMT310 Measurement and Calculation Quantities 13
Table 4 MMT318 Pipe Dimensions 21
Table 5 Current Consumption by Output Type 29
Table 6 Measurement Output 36
Table 7 Output Formatting 36
Table 8 Calibration and Adjustment* 36
Table 9 Setting, Scaling and Testing Analog Outputs 37
Table 10 Other Commands 37
Table 11 Modifiers 42
Table 12 Analog Output Quantity Abbreviations 42
Table 13 Analog Output Quantity Abbreviations 45
Table 14 Water Activity / Relative Saturation 67
Table 15 Temperature 67
Table 16 Electrical Connections 68
Table 17 General 68
Table 18 Spare Parts and Accessories 69

AKRIBIS · www.akribis.info · contacto@akribis.info

CHAPTER 1

GENERAL INFORMATION

This chapter provides general notes for the manual and the MMT310.

About This Manual

This manual provides information for installing, operating, and maintaining Vaisala HUMICAP® Moisture and Temperature Transmitter Series for Oil MMT310 (MMT317 and MMT318).

Contents of This Manual

This manual consists of the following chapters:

- Chapter 1, General Information, provides general notes for the manual and the MMT310.
- Chapter 2, Product Overview, introduces the features, advantages, and the product nomenclature.
- Chapter 3, Installation, provides you with information that is intended to help you install the MMT310.
- Chapter 4, Operation, contains information that is needed to operate the MMT310.
- Chapter 5, Maintenance, provides information that is needed in basic maintenance of the MMT310.
- Chapter 6, Calibration and adjustment, describes the calibration and adjustment procedures.
- Chapter 7, Technical Data, provides the technical data of the MMT310.
- Appendix A, Applications, describes typical applications where MMT310 is used.

AKRIBIS · www.akribis.info · contacto@akribis.info

Version Information

Table 1 Manual Revisions

Manual Code	Description
M210474EN-D	September 2015. This manual. %RS added to available quantities.
M210474EN-C	March 2014. Previous version. New software functionality applicable from version 2.0.1 onward. Voltage output added to analog output options, new voltage parameters in the AMODE command. Added information on rain shield, sampling cell, MI70 hand-held indicator, and USB connection. Transmitter plastic housing material changed to PPS. Updated serial terminal instructions, list of optional accessories and operating voltage and power consumption specifications. Document template updated, quality improvement updates.
M210474EN-B	MMT318 and MMT317 User's Guide. The manual has been updated with MMT317 installation instructions and MMT317 dimension figure.

Related Manuals

Table 2 Related Manuals

Manual Code	Manual Name
M210878EN	Vaisala HUMICAP® Hand-held Moisture Meter for Oil MM70 User's Guide
M210185EN	Vaisala Humidity calibrator HMK15 User's Guide

Documentation Conventions

Throughout the manual, important safety considerations are highlighted as follows:

WARNING Warning alerts you to a serious hazard. If you do not read and follow instructions very carefully at this point, there is a risk of injury or even death.

CAUTION Caution warns you of a potential hazard. If you do not read and follow instructions carefully at this point, the product could be damaged or important data could be lost.

NOTE Note highlights important information on using the product.

AKRIBIS · www.akribis.info · contacto@akribis.info

Safety

The Vaisala HUMICAP® Moisture and Temperature Transmitter Series for Oil MMT310 is delivered to you tested for safety and approved as shipped from the factory. Note the following precautions:

WARNING	Ground the product and verify outdoor installation grounding periodically to minimize shock hazard.

CAUTION	Do not modify the unit. Improper modification can damage the product or lead to malfunction.

CAUTION	Do not touch the sensor plate.

CAUTION	In pressurized processes it is essential to tighten the supporting nuts and screws very carefully to prevent loosening of the probe by the action of pressure.

CAUTION	Take care not to damage the probe body. A damaged body makes the probe less tight and may prevent it from going through the clasp nut.

ESD Protection

Electrostatic Discharge (ESD) can cause immediate or latent damage to electronic circuits. Vaisala products are adequately protected against ESD for their intended use. It is possible to damage the product, however, by delivering electrostatic discharges when touching, removing, or inserting any objects inside the equipment housing.

To make sure you are not delivering high static voltages yourself:

- Handle ESD sensitive components on a properly grounded and protected ESD workbench.
- When an ESD workbench is not available, ground yourself to the equipment chassis with a wrist strap and a resistive connection cord.
- If you are unable to take either of the above precautions, touch a conductive part of the equipment chassis with your other hand before touching ESD sensitive components.
- Always hold component boards by the edges and avoid touching the component contacts.

AKRIBIS · www.akribis.info · contacto@akribis.info

Recycling

Recycle all applicable material.

Dispose of the unit according to statutory regulations. Do not dispose of with regular household refuse.

Regulatory Compliances

MMT310 complies with the following performance and environmental test standards:

- EN 61326-1, Industrial environment.

Emissions

Test	Complies with Standard
Radiated emissions	EN/IEC 55022 / CISPR16/22 Class B

Immunity

Test	Complies with Standard
Electrostatic discharge (ESD)	EN/IEC 61000-4-2
Radiated immunity	EN/IEC 61000-4-3
EFT burst (Electric fast transients)	EN/IEC 61000-4-4
Surge	EN/IEC 61000-4-5
Conducted immunity	EN/IEC 61000-4-6

Trademarks

HUMICAP® is a registered trademark of Vaisala.

Windows® is a registered trademark of Microsoft Corporation in the United States and/or other countries.

AKRIBIS · www.akribis.info · contacto@akribis.info

Software License

This product contains software developed by Vaisala. Use of the software is governed by license terms and conditions included in the applicable supply contract or, in the absence of separate license terms and conditions, by the General License Conditions of Vaisala Group.

Warranty

Visit our Internet pages for standard warranty terms and conditions: www.vaisala.com/warranty.

Please observe that any such warranty may not be valid in case of damage due to normal wear and tear, exceptional operating conditions, negligent handling or installation, or unauthorized modifications. Please see the applicable supply contract or Conditions of Sale for details of the warranty for each product.

AKRIBIS · www.akribis.info · contacto@akribis.info

This page intentionally left blank.

AKRIBIS · www.akribis.info · contacto@akribis.info

CHAPTER 2

PRODUCT OVERVIEW

This chapter introduces the features, advantages, and the product nomenclature.

Introduction to MMT310 Series

The Vaisala HUMICAP® Moisture and Temperature Transmitter Series for Oil MMT310 is a small-size oil moisture and temperature transmitter that powers up with 10 ... 35 VDC (mode-dependent power supply requirements).

The MMT310 probe options are:

- MMT317 – small pressure-tight probe
- MMT318 – probe for pressurized pipelines

MMT310 supports the following output alternatives:

- Analog outputs 0/4 ... 20 mA and 0 … 5/10 V
  (1 … 5 V available as scaled output: see section Setting, Scaling and Testing the Analog Outputs on page 44).
- RS-232 serial line
- USB cable (optional accessory, order code 238607)
- MI70 handheld indicator connection (optional connection cable DRW216050)

For a list of MMT310 optional accessories and spare parts, see section Spare Parts and Accessories on page 69.

The transmitter measures and calculates the following quantities:

Table 3 MMT310 Measurement and Calculation Quantities

Quantity	Abbreviation	Metric Unit	Non Metric Unit
Water activity	aw	aw	aw
Relative saturation	%RS	%RS	%RS
Temperature	T	°C	°F
Parts per million (for transformer oil only)	ppm	ppm	ppm

AKRIBIS · www.akribis.info · contacto@akribis.info

Vaisala HUMICAP moisture in oil transmitters MMT318 and MMT317 are designed for industrial applications. They measure water in oil in terms of water activity (aw) and relative saturation (%RS). With the help of internal oil solubility coefficients, MMT310 is also able to output oil moisture in ppm (by default supported only for mineral transformer oil).

Water activity indicates the amount of oil in the scale of 0 … 1 a_w. In this scale, 0 a_w is an indication of completely water free oil, and 1 a_w an indication of oil fully saturated with water (water is present in free form).

Relative saturation indicates the amount of water oil in the scale of 0 ... 100 %RS. In this scale, 0 %RS is an indication of completely water free oil and 100 %RS an indication of oil fully saturated with water (water is present in free form).

The most important feature which distinguishes the measurement of water activity (a_w) and relative saturation (%RS) from the traditional measurement of absolute water content (in ppm) is that the saturation point remains stable regardless of the oil type or the aging of oil, additives used, etc. As water activity exceeds 0.9 a_w (or relative saturation exceeds 90 %RS) in any system, there is a risk for segregation (especially if the temperature decreases).

Water activity and relative saturation are used for alarming at the point of >0.9 aw / >90 %RS that the risk for free water in the system is obvious.

The most important advantages of this system are the fact that water activity and relative saturation are immune to the aging of oil and to additives. MMT318 and MMT317 can be used for continuous on-line measurements and be calibrated against salt solutions with no reference oils needed.

Appendix A on page 75 presents application information when using the MMT318 and MMT317 with transformer oil (output unit= ppm). General information on paper machine use is also included in the Appendix.

AKRIBIS · www.akribis.info · contacto@akribis.info

MMT310 Transmitter Parts

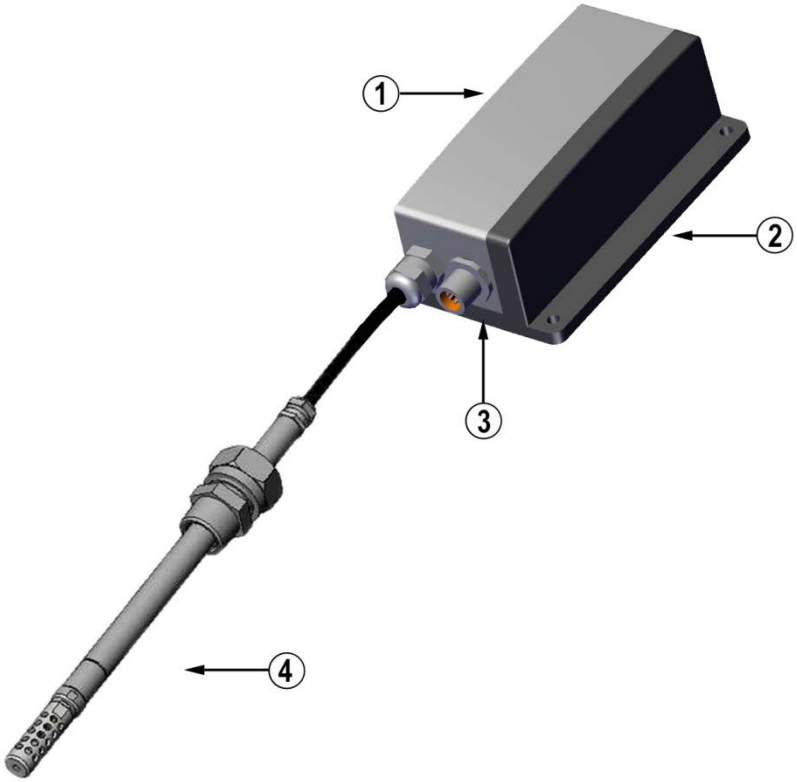

1403-179

Figure 1 MMT310 Transmitter Parts

The following numbers refer to Figure 1 above:

1 = Transmitter unit
2 = Mounting plate (smaller mounting plate also available)
3 = Connector for signal output and power supply. Available with female connector with 5 m cable or screw terminal connector.
4 = Probe

AKRIBIS · www.akribis.info · contacto@akribis.info

Probe Options

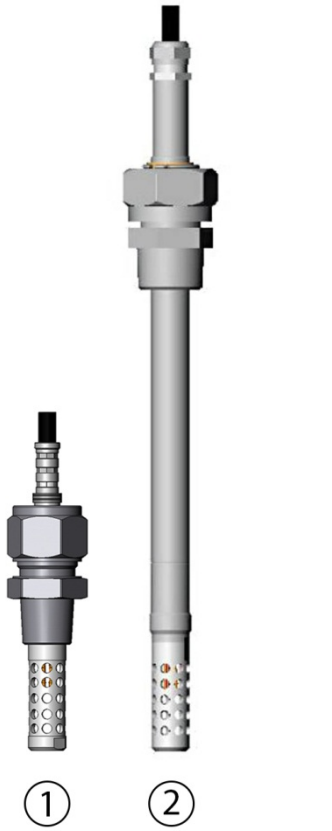

Figure 2 MMT310 Probes

The following numbers refer to Figure 2 above:

1 = MMT317 probe with optional Swagelok connector for tight-place installations.

2 = MMT318 probe for pressurized pipelines with two adjustable probe lengths and optional ball valve set.

For probe dimensions, see MMT317 Probe with Optional Swagelok Connector, Dimensions on page 74 and MMT318 Probe Dimensions on page 72.

Filter Options

MMT310 filter options include stainless steel filters with 3.15 mm and 1.5 mm (for high flow velocity oil measurements) holes. The filters are 12 mm in diameter with a female thread. The filters recommended for a probe type can be selected on the corresponding MMT310 order form.

For information on ordering accessories, see section Spare Parts and Accessories on page 69.

AKRIBIS · www.akribis.info · contacto@akribis.info

CHAPTER 3

INSTALLATION

This chapter provides you with information that is intended to help you install the MMT310.

Mounting

Selecting a Place for the Probe

Select a place which gives a true picture of the process. Oil should circulate freely around the sensor; clear oil flow is recommended. Install the probe directly into the circulation system and not into the oil reservoir because of deposition.

It is recommended that the sensor head is installed directly in the process through the ball valve assembly. When the ball valve assembly is used, the pipe does not have to be emptied or shut down for installation or removal of the probe. Install the sensor head transversely against the direction of the process flow.

NOTE Avoid mounting the transmitter housing close to steam sources or directly exposed to rain. To ensure an IP 66 class protection, always mount the transmitter housing with the cable bushings pointing downwards.

NOTE Take care not to damage the pipe of the probe. If the pipe is damaged, the probe head is less tight and will not go through the clasp nut. Make sure that the filter is tightly fastened to protect the sensors.

AKRIBIS · www.akribis.info · contacto@akribis.info

Mounting the Transmitter/Removing the Transmitter Unit

Select a place with stable conditions for mounting the transmitter. Do not expose the transmitter to direct sunlight or rain. Always mount the transmitter housing with the cable bushings pointing downwards.

NOTE	If the transmitter is mounted outdoors, cover it with a shelter (purchased by customer). A rain shield designed for MMT310 is available as an optional accessory. For information on ordering accessories, see section Spare Parts and Accessories on page 69.

1. Mount the plate onto the wall with four/two screws (Ø 4.5 mm/6.0 mm).
2. Place the transmitter onto the mounting plate and fasten it with two Allen screws.

The transmitter module can be unfastened for calibration by releasing the two Allen screws on the left side.

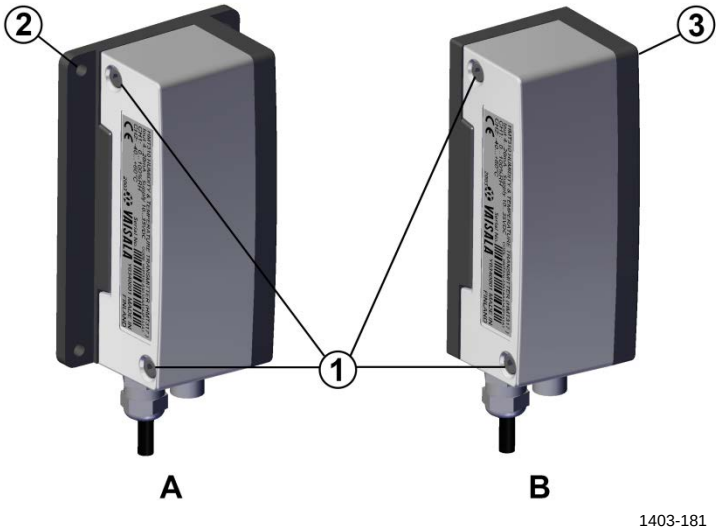

Figure 3 Mounting with Mounting Plates

The following letters and numbers refer to Figure 3:

A = Mounting with larger mounting plate (mount from flanges)
B = Mounting with smaller mounting plate (remove the transmitter and mount using the holes in mounting plate base)
1 = Two Allen screws for fastening or removing the transmitter module (Allen key provided)
2 = Four screw holes (Ø 4.5 mm) for wall mounting (screws not provided)
3 = Two screw holes (Ø 6.0 mm) on the base of the plate for wall mounting (screws not provided)

AKRIBIS · www.akribis.info · contacto@akribis.info

NOTE	It is recommended that the supply is switched off before connecting the cable plug to transmitter during installation or service/calibration.

Mounting the Transmitter with Optional Rain Shield

If you mount MMT310 outdoors, use a shelter to protect the transmitter. An MMT310 rain shield is available from Vaisala as an optional accessory (order code ASM211103).

NOTE	Vaisala does not recommend installing the transmitter outdoors with the smaller mounting plate (without flanges). Use the larger mounting plate with flanges for outdoor installations.

Mounting the Rain Shield with Larger Transmitter Mounting Plate

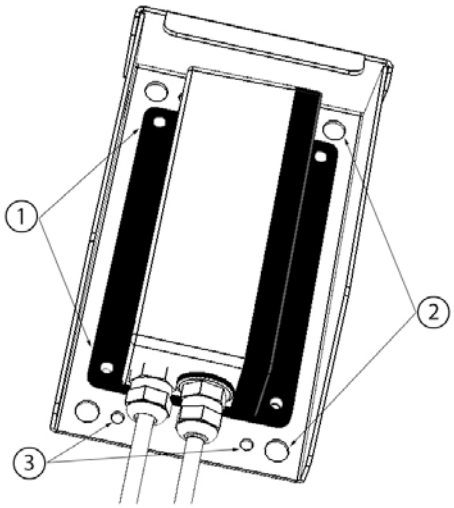

1311-251

Figure 4 Rain Shield with Large Mounting Plate

The following numbers refer to Figure 4 above:

1 = Transmitter's larger mounting plate: attaches to rain shield from flanges with four Ø 4.5 mm screws (not provided).
2 = Rain shield: Four Ø 8.5 mm holes for (U-bolt) mounting. The maximum diameter of the pole in U-bolt mounting is 60 mm.
3 = Rain shield: Four Ø 4.5 mm screw holes for mounting.

AKRIBIS · www.akribis.info · contacto@akribis.info

You can mount the rain shield and transmitter directly to a wall with screws through both the mounting plate and the rain shield, or attach the transmitter mounting plate to the rain shield and use for example U-bolt mounting depending on the requirements of the installation site.

For rain shield measurements, see section Rain Shield Dimensions on page 71.

Mounting the MMT318

NOTE	Do not unsolder and then again resolder the sensor head cable from and to the printed board during installation; this procedure may alter the humidity calibration of the transmitter.

Mounting for Pressurized Pipelines/Oils

Due to the sliding fit, MMT318 is easy to install into and remove from the pressurized process. The probe is especially suitable for measurements in pipelines.

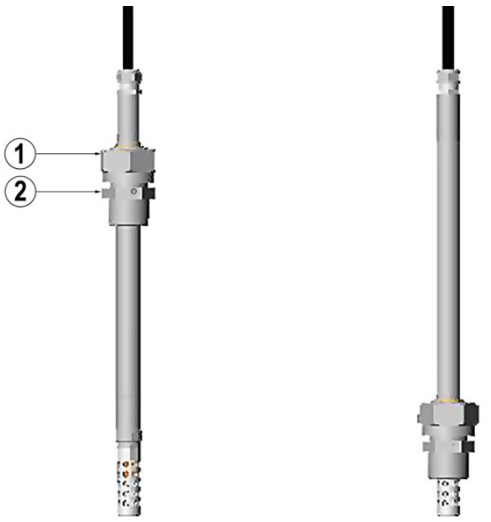

Figure 5 MMT318 Probe

The following numbers refer to Figure 5 above:

1 = Clasp nut; 24 mm hex nut
2 = Fitting body; 27 mm hex head

AKRIBIS · www.akribis.info · contacto@akribis.info

The following two fitting body options are available:

- Fitting Body ISO1/2 solid structure (DRW212076SP)
- Fitting Body NPT1/2 solid structure (NPTFITBODASP)

Table 4 MMT318 Pipe Dimensions

Type	Pipe Dimension	Adjustment Range
Standard	178 mm	120 mm
Optional	400 mm	340 mm

Use teflon tape or thread sealant to seal the connection between the fitting body and the process/ball valve.

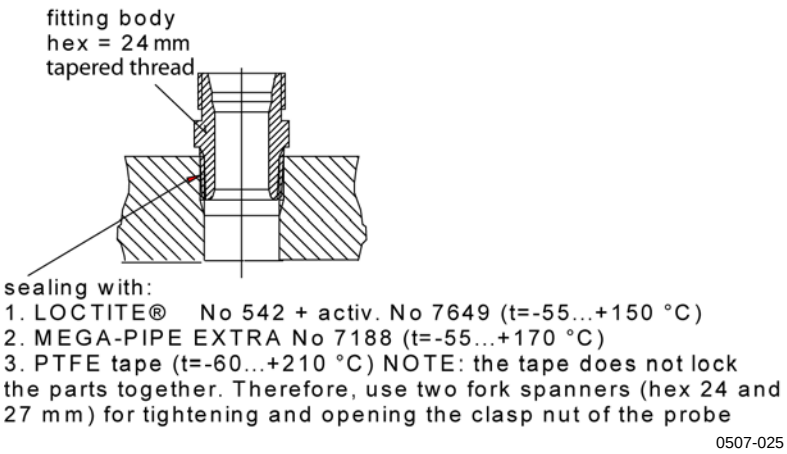

Figure 6 Sealing of Fitting Body into Process

Tightening the Clasp Nut

1. Adjust the probe to a suitable depth according to the type of installation.
2. Tighten the clasp nut first manually.
3. Mark the fitting screw and the clasp nut.
4. Tighten the nut a further 50 - 60º (ca. 1/6 turn) with a wrench. If you have suitable torque wrench, tighten the nut to max 45 ± 5 Nm (33 ± 4 ft-lbs).

AKRIBIS · www.akribis.info · contacto@akribis.info

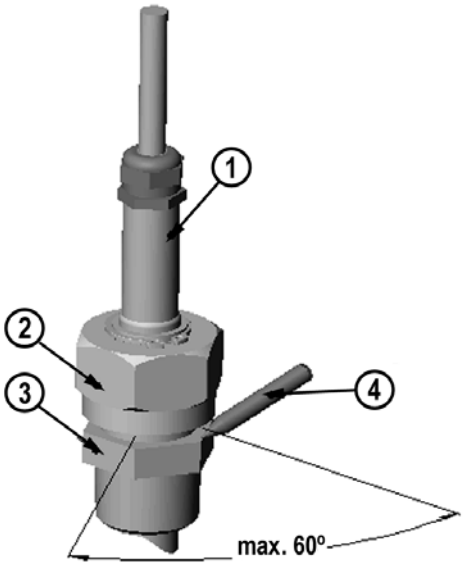

0505-276

Figure 7 Tightening the Clasp Nut

The following numbers refer to Figure 7:

1 = Probe
2 = Clasp nut
3 = Fitting screw
4 = Pen (for marking)

NOTE	Take care not to overtighten the clasp nut to avoid difficulties when opening it.

CAUTION	Take care not to damage the probe body. A damaged body makes the probe less tight and may prevent it from going through the clasp nut.

CAUTION	In pressurized processes it is essential to tighten the supporting nuts and screws very carefully to prevent loosening of the probe by the action of pressure.

When the probe is used in a pressurized process the sensor head should preferably be installed through a ball valve assembly. See section Ball Valve Installation Kit for MMT318 for more information on the optional ball valve installation kit.

AKRIBIS · www.akribis.info · contacto@akribis.info

Ball Valve Installation Kit for MMT318

The optional ball valve installation kit (Vaisala order code: BALLVALVE-1) is preferred when connecting the probe to a pressurized process or pipeline. Use the ball valve set or a 1/2" ball valve assembly with a ball hole of Ø14 mm or more.

If you install the sensor head (Ø 12 mm) in a process pipe, please note that the nominal size of the pipe must be at least 1 inch (2.54 cm). Use a manual press handle to press the sensor head into the pressurized (< 10 bar) process or pipeline.

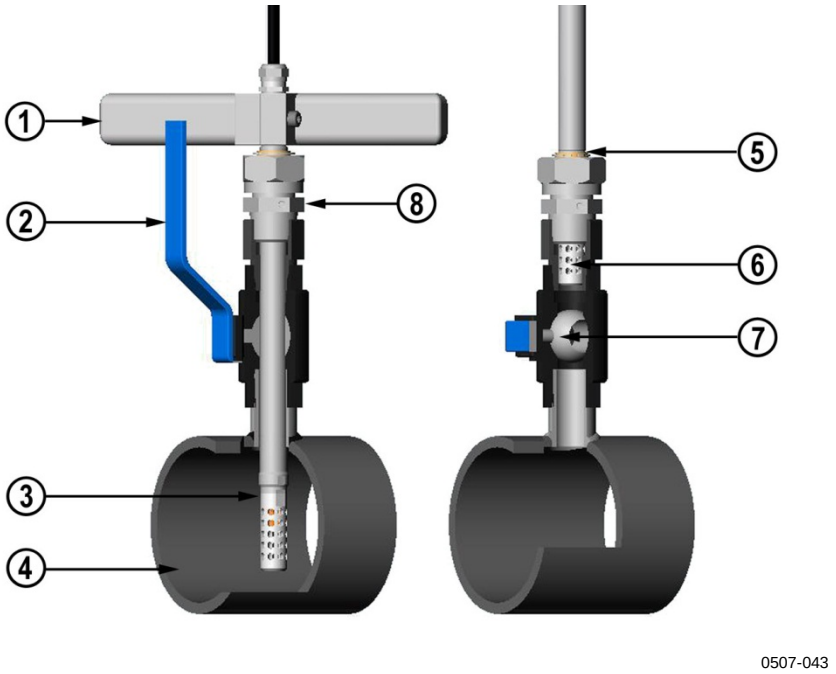

Figure 8 MMT318 Ball Valve Assembly Installation

The following numbers refer to Figure 8 above:

1 = Manual press tool
2 = Handle of the ball valve
3 = Probe
4 = Process chamber or pipeline
5 = Groove on the probe indicates the upper adjustment limit
6 = Filter
7 = Ball of the ball valve
8 = Fitting screw

AKRIBIS · www.akribis.info · contacto@akribis.info

NOTE	The probe can be installed in the process through the ball valve assembly provided that the process pressure is less than 10 bars. This way, the process does not have to be shut down when installing or removing the probe. However, if the process is shut down before removing the probe, the process pressure can be max. 20 bars.

NOTE	When measuring temperature dependent quantities make sure that the temperature at the measurement point is equal to that of the process, otherwise the moisture reading may be incorrect.

Follow the steps below to install the MMT318 probe through a ball valve assembly. After the installation, the probe should be sitting in the process chamber or pipeline as shown in Figure 8 on page 23.

1. Shut down the process if the process pressure is more than 10 bars. If the pressure is lower there is no need to shut down the process.
2. Close the ball valve.
3. Seal the threads on the fitting body; refer to Figure 6 Sealing of Fitting Body into Process on page 21.
4. Attach the fitting body to the ball valve and tighten it.
5. Slide the clasp nut of the probe toward the filter, as far as it will go.
6. Insert the probe to the fitting body, and manually tighten the clasp nut to the fitting body.
7. Open the ball valve.
8. Push the probe through the ball valve assembly into the process. If the pressure is high, use the pressing handle that is provided with the probe. If you push the probe hard without using the handle, you may damage the cable.

   Note that the probe must be pushed to a depth where the filter is completely inside the process flow.
9. Mark the fitting screw and the clasp nut.
10. Tighten the clasp nut with an open-end wrench a further 50 ... 60º (ca. 1/6 turn). If you have a suitable torque wrench, tighten the nut to max 45 ± 5 Nm (33 ± 4 ft-lbs). Refer to Figure 7 on page 22.

NOTE	Take care not to tighten the clasp nut more than 60° to avoid difficulties when opening it.

AKRIBIS · www.akribis.info · contacto@akribis.info

If you wish to remove the probe from the process, note that you have to pull the probe out far enough. You cannot close the valve if the groove on the probe body is not visible.

Sampling Cell for MMT318

It may be necessary to use a sampling cell if the MMT318 probe cannot be installed directly into the process pipe, for example, if the pipe is too small for the probe. Using a bypass sampling line may be feasible in these cases. Sampling Cell with Swagelok Connectors (Vaisala order code: DMT242SC2) is available as an optional accessory.

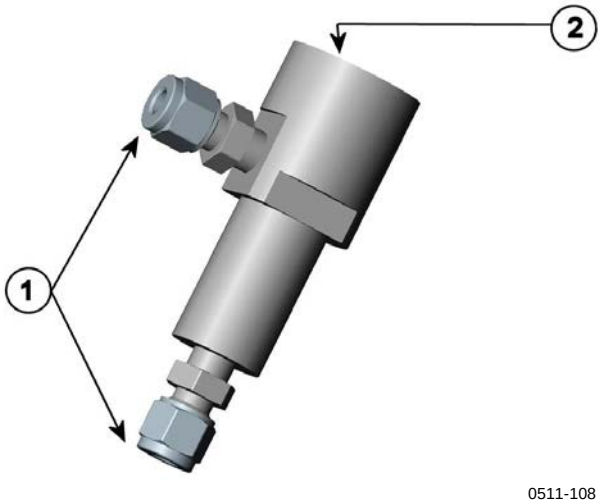

Figure 9 Sampling Cell DMT242SC2

The following numbers refer to Figure 9 above:

1 = Male pipe weld connector Swagelok 1/4"
2 = G1/2"

Mounting the MMT317

The MMT317 uses a small pressure-tight probe and is ideal for tight spaces with threaded connection. The small probe is installed using the threaded fitting bodies as instructed in this section.

NOTE	Do not unsolder and then again resolder the sensor head cable from and to the printed board during installation; this procedure may alter the calibration of the transmitter.

AKRIBIS · www.akribis.info · contacto@akribis.info

MMT317 Probe with Swagelok Connector for Tight-place Installations

The Swagelok installation kit for MMT317 includes a Swagelok connector with ISO3/8" thread (Vaisala order code: SWG12ISO38) or NPT1/2" thread (Vaisala order code: SWG12NPT12).

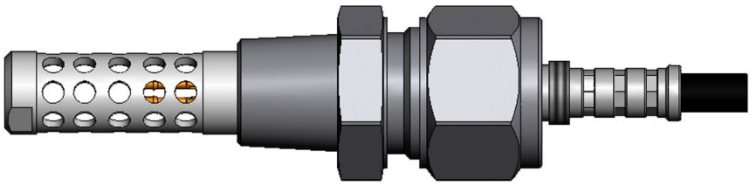

0509-144

Figure 10 MMT317 Probe with Swagelok Installation Kit

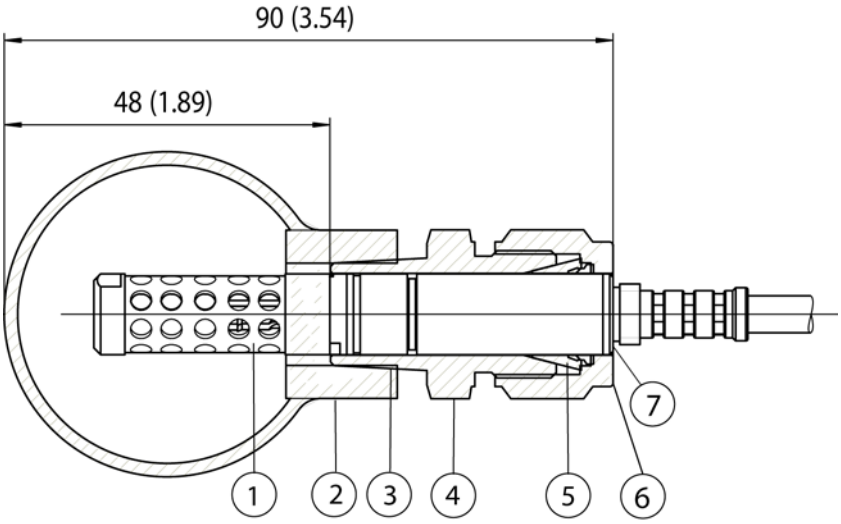

0509-150

Figure 11 MMT317 Probe Installation to Pipeline with Swagelok Installation Kit

The following numbers refer to Figure 11 above:

1 = Probe
2 = Duct connector
3 = ISO3/8" or NPT1/2" thread
4 = Swagelok connector
5 = Ferrules
6 = Upper edge of the connector nut
7 = Upper edge of the probe

AKRIBIS · www.akribis.info · contacto@akribis.info

Mount the MMT317 as follows:

1. Select the correct connector for the installation. The connector options are:
   a. R3/8" ISO (Swagelok code SS-12M0-1-6RTBT)
   b. 1/2" NPT (Swagelok code SS-12M0-1-8BT)

Note that the connector inner diameters extend for Ø12 mm probe.

2. Check that the probe position is correct. Before the final tightening check that the upper edge of the connector nut is in line with the upper edge of the probe. Otherwise the sealing may not be gas tight.
3. Ensure gas-tight sealing:
   a. Turn the connector nut finger tight and draw a vertical mark on the nut and the fitting body.
   b. Be sure that the probe position follows step 2.
   c. Tighten the connector nut with a wrench 1 and 1/4 turns (360º +90º) with the help of marks you drew. The connector now has a gas tight connection to the probe. Excess tightening can damage the probe.
   d. The connector can be disconnected and re-installed. In re-installation first turn the connector nut finger tight and then with wrench 1/4 turn (90º).
4. Use teflon tape or thread sealant to seal the connection between the Swagelok connector and the process (see Figure 6 on page 21).

AKRIBIS · www.akribis.info · contacto@akribis.info

Connections

When the MMT310 leaves the factory, the measurement ranges, output scaling and quantities have already been set according to the customer order. The unit is calibrated at the factory and ready for use. The transmitter is delivered with either a screw terminal connector or with a detachable 5m cable with eight wires for serial port, analog outputs and 10 … 35 VDC power supply (requirements vary dependending on the operating environment and output type). The wiring is described in this section. For power supply requirements, see section Power Supply Requirements on page 29.

Cable Wiring

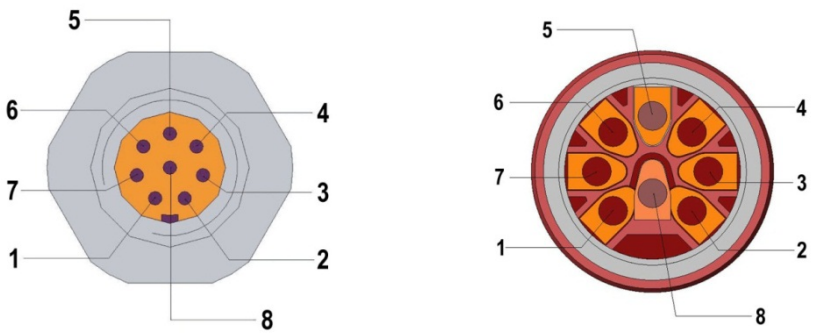

0507-044, 0507-045

Figure 12 8-Pin Connector (Left) and Screw Terminal Connector (Right)

Pin	Wire	Serial Signal RS-232C	Analog Signal
1	White	Data out TX	-
2	Brown	-	Ch 1 - / Ch 2 -
3	Green	-	Ch 2 +
4	Yellow	-	Ch 1 +
5	Grey	Supply - / RS-232 GND	Supply -
6	Pink	Supply +	Supply +
7	Blue	Data in RX	-
8	Red	Not connected	Not connected

AKRIBIS · www.akribis.info · contacto@akribis.info

Power Supply Requirements

The minimum supply voltage required by the MMT310 transmitter depends on the output type and pressure:

- RS-232 output: 10 ... 35 VDC.
- Analog output: 15 ... 35 VDC.
- Pressures above 10 bara (145 psia): minimum 24 VDC.

Table 5 below lists the MMT310 current consumption according to output type.

Table 5 Current Consumption by Output Type

Output	Consumption
RS-232	12 mA
Uout 10 V (10kOhm) Channel1 & Channel 2	12 mA
Iout 20mA (load 511Ohm) Channel 1 & Channel 2	50 mA

NOTE MMT310 can also be powered by an MI70 indicator or a USB cable connection to a computer. For information on ordering the optional MI70 and USB connection cables, see section Spare Parts and Accessories on page 69.

AKRIBIS · www.akribis.info · contacto@akribis.info

This page intentionally left blank.

AKRIBIS · www.akribis.info · contacto@akribis.info

CHAPTER 4

OPERATION

This chapter contains information that is needed to operate the MMT310.

Power Supply

Use a 10 … 35 VDC power supply (required minimum voltage varies depending on the operating environment and output type). For instructions on selecting the correct operating voltage, see section Power Supply Requirements on page 29.

Transmitter Start-Up

When the transmitter is connected to a power supply, there is a delay of three seconds as the transmitter starts up. After the start-up is complete, the measurement data is available from the analog output and serial line.

If serial line output is used, note that the transmitter will behave according to the configured serial mode:

- In STOP mode, the transmitter outputs the transmitter model and software version. This is the default mode.
- In RUN mode a measurement output starts immediately.
- In POLL mode the transmitter does not output anything after powerup.

For instructions on configuring the serial mode, see section Set Serial Interface Mode on page 39.

AKRIBIS · www.akribis.info · contacto@akribis.info

Serial Line and Analog Communication Options

MMT310 measurement data can be accessed with the following serial or analog options:

- RS-232 serial port connection to a computer
- Analog output (current or voltage)

For temporary access, you can also connect to the transmitter with the following:

- USB connection to a computer using an optional USB cable (238607)
- Connection to a hand-held MI70 indicator using an optional MI70 calibration cable (DRW216050SP)

When using the MMT310 with a serial connection (RS-232 serial cable or USB), you need a terminal program to operate the MMT310 command line interface. For instructions on installing and using the PuTTY terminal application for Windows (available from http://www.vaisala.com/software), see section Terminal Program Settings on page 35.

For information on using the analog outputs, see section Setting, Scaling and Testing the Analog Outputs on page 44.

RS-232 Serial Port Connection

When connecting the MMT310 to a computer with an RS-232 cable, use the following data format settings (factory settings) in the terminal program:

- 1 start bit
- 7 data bits
- 1 stop bit
- Even parity
- 4800 bits per second, programmable to 19200
- Full duplex
- Serial asynchronous
- Configured as Data Terminal Equipment (DTE)

Enter the communication parameters when using this terminal session for the first time and save them for future use.

AKRIBIS · www.akribis.info · contacto@akribis.info

USB Connection

MMT310 can be connected to a computer by using a USB cable (order code 238607). The USB cable is an optional accessory: for more information on ordering optional items, see section Spare Parts and Accessories on page 69.

NOTE	Before starting to use the USB cable, you must install the USB cable driver (requires Windows).

Installing the Driver for the USB Cable

Complete the following steps to install the USB driver before taking the USB cable into use:

1. Check that the USB cable is not connected. Disconnect the cable if you have already connected it.
2. Insert the media that came with the cable, or download the driver from http://www.vaisala.com/software.
3. Execute the USB driver installation program (setup.exe), and accept the installation defaults. The installation of the driver may take several minutes.
4. After the driver has been installed, connect the USB cable to a USB port on your computer. Windows will detect the new device, and use the driver automatically.
5. The installation has reserved a COM port for the cable. Verify the port number, and the status of the cable, using the Vaisala USB Device Finder program that has been installed in the Windows Start menu.

Windows will recognize each individual cable as a different device, and reserve a new COM port. Remember to use the correct port in the settings of your terminal program.

AKRIBIS · www.akribis.info · contacto@akribis.info

Connection to an MI70 Hand-held Indicator

MMT310 can be connected to the hand-held MI70 indicator with the MI70 connection cable (DRW216050SP). The MI70 connection cable is an optional accessory: for more information on ordering optional items, see section Spare Parts and Accessories on page 69.

When MMT310 is connected to the MI70 indicator, you can view MMT310 readings and perform MMT310 adjustments using the MI70 indicator's interface.

For instructions on performing MMT310 adjustments with the MI70 indicator, see section Adjustment Using an MI70 Indicator on page 62.

For general instructions on using the MI70 hand-held indicator to view and log readings and further information on using MI70, see the MI70/MM70 user documentation.

AKRIBIS · www.akribis.info · contacto@akribis.info

Terminal Program Settings

The instructions in this section describe how to connect a computer to the MMT310 using the PuTTY terminal application for Windows (available for download at http://www.vaisala.com/software). Perform the necessary cabling and configuration of the transmitter before following the instructions.

Opening a Serial/USB Connection with PuTTY

1. Power up the MMT310 and start the PuTTY application.
2. Select the Serial & USB settings category, and check that the correct COM port is selected in the “Serial or USB line to connect to” field. Change the port if necessary.
   If you are using a Vaisala USB cable, you can check the port that it uses by clicking the **USB Finder...** button. This opens the Vaisala USB Instrument Finder program that has been installed along with the USB drivers.
3. Check that the other serial/USB line settings are correct for your connection, and change if necessary.

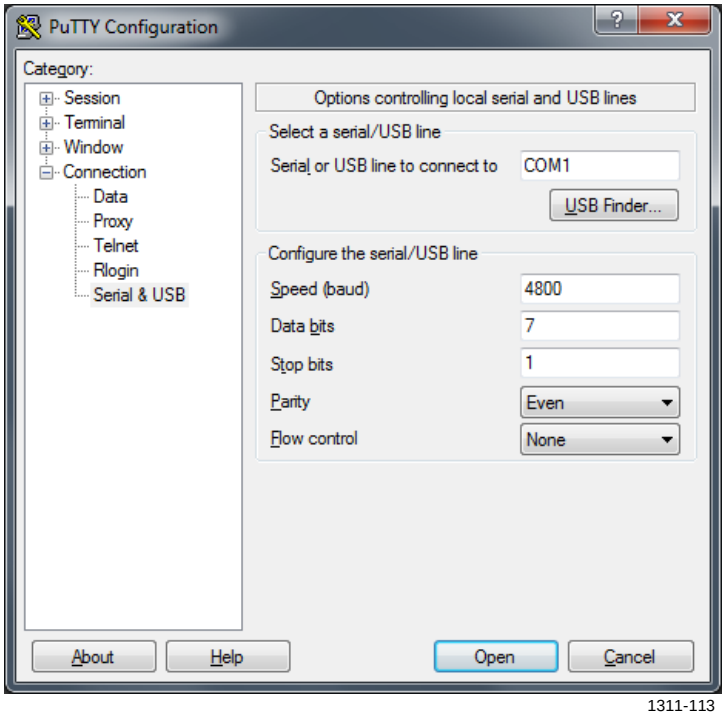

Figure 13 PuTTY Serial Line Configuration

4. Click the Open button to open the connection window and start using the serial connection command line interface.
   If PuTTY is unable to open the serial port you selected, an error message is displayed. If this happens, restart PuTTY and check the settings.

AKRIBIS · www.akribis.info · contacto@akribis.info

List of Serial Commands

All commands can be issued either in uppercase or lowercase. In the command examples, the keyboard input by the user is in **bold** type.

The notation <cr> refers to pressing the carriage return (**Enter**) key on your computer keyboard. Enter a <cr> to clear the command buffer before starting to enter commands. In the following command tables, the bold text in the brackets is the default setting.

Table 6 Measurement Output

Command	Description
R	Start continuous reading output
S	Stop continuous reading output
INTV [**0** … 255 **S**/MIN/H]	Set continuous output interval for RUN-mode
SEND [**0** … 99]	Output reading once
SMODE [**STOP**/RUN/POLL]	Set serial interface mode
SERI [baud p d s]	Serial line settings (default: 4800 E 7 1) baud: 300…19200
ADDR [**0** … 99]	Set transmitter address for use in POLL-mode
OPEN [0 … 99]	Temporarily open transmitter from POLL mode to receive commands
CLOSE	Close the temporary connection (back to POLL mode)

Table 7 Output Formatting

Command	Description
FORM	Set serial output format
TIME	Set time
DATE	Set date
FTIME [ON/**OFF**]	Add time to SEND and R outputs
FDATE [ON/**OFF**]	Add date to SEND and R outputs
UNIT	Select metric or nonmetric output units

Table 8 Calibration and Adjustment*

Command	Description
CRH	Relative humidity calibration
CT	Temperature calibration
L	View the currently applied standard user adjustment offset and gain
LI	Revert factory calibration
FCRH	Relative humidity calibration after sensor change
CTEXT	Set calibration information text
CDATE	Set calibration date
ACAL	Analog output calibration

*These commands are presented in section Calibration and adjustment on page 55.

AKRIBIS · www.akribis.info · contacto@akribis.info

Table 9 Setting, Scaling and Testing Analog Outputs

Command	Description
AMODE	Set analog outputs (0/4 ... 20 mA or 0 … 5/10 V, 1 … 5 V available through scaling)
ASEL	Select parameter for analog outputs
ASCL	Scale analog outputs
ITEST	Test analog outputs
AQTEST	Test analog outputs for desired readings
AERR	Change analog error output value

Table 10 Other Commands

Command	Description
?	Check transmitter settings
??	Check transmitter settings in POLL mode
ECHO [**ON**/OFF]	Serial bus echo
FILT	Set result filtering
FIND	All devices in POLL mode send their addresses
HELP	List commands
RESET	Reset transmitter
ERRS	List error messages
OIL [ON/OFF]	Enable/disable ppm output when measuring moisture in oil.

AKRIBIS · www.akribis.info · contacto@akribis.info

Measurement Output

Starting the Continuous Reading Output

Syntax: R <cr>

Starts output of measurements to the peripheral devices (RUN mode). While the measurement output is active the only command that can be given is **S** (stop).

The output mode can be changed with the **FORM** command.

Example:

```
>r
aw=     0.2000 aw T=    25.09 'C …
aw=     0.2000 aw T=    25.20 'C …
```

Stopping the Continuous Reading Output

Syntax: S <cr>

Stops the continuous output**. <ESC>** can also be used to stop the output.

Set Continuous Output Interval for RUN Mode

Syntax: INTV xxx yyy<cr>

Where

Xxx	=	Output interval (0 ... 255)
yyy	=	Unit (s, min or h)

Example:

```
>intv 1
Output interval: 1 S
>intv 1 min<cr>
Output interval: 1 MIN
>intv 1 h<cr>
Output interval: 1 H
```


AKRIBIS · www.akribis.info · contacto@akribis.info

Output Reading Once

Syntax in STOP-mode: SEND<cr>

Syntax in POLL-mode: SEND aa<cr>

Where

aa = Address of the transmitter when more than one transmitter is connected to a serial bus (0 ... 99).

Example:

```
>send
aw=  0.2 aw T=  -47.37 'C …
```

If the value is too long to fit to the allocated space or if there is an error in outputting, the value is displayed with stars '*'.

For example,

```
aw=*.* aw T= 31.0 'C
```

The output mode can be changed with the FORM command.

Set Serial Interface Mode

Syntax: SMODE x<cr>

Where

x = STOP/RUN/POLL
STOP mode: Transmitter in standby for serial commands
RUN mode: Transmitter outputs data continuously
POLL mode: Transmitter only responds to addressed commands. Use the **OPEN** <transmitter address> command to temporarily enable serial commands (as in STOP mode) when in POLL mode.

AKRIBIS · www.akribis.info · contacto@akribis.info

Example:

```
>smode run
Output mode    : RUN

>r
02:08:01.03 aw=     0.2 aw T=   -47.13 'C …
02:08:04.21 aw=     0.2 aw T=   -47.16 'C …
<ESC>

>smode stop
Output mode    : STOP
```

Serial Line Settings

Syntax: SERI b p d s<cr>

Where

b	=	bauds (300, 600, 1200, 2400, 4800, 9600,19200)
p	=	parity (n = none, e = even, o = odd)
d	=	data bits (7 or 8)
s	=	stop bits (1 or 2)

The settings can be changed one parameter at a time or all parameters at once.

Example:

>seri o 4800 o 7 1	changing parity only
>seri 600 n 8 1 600 n 8 1	changing all parameters

Set Transmitter Address for Use in POLL Mode

Syntax: ADDR aa<cr>

Where

aa	=	Address (0 ... 99)

Example:

```
>addr
Address        : 0
>addr 1
Address        : 1
```


AKRIBIS · www.akribis.info · contacto@akribis.info

Temporarily Open Transmitter from POLL Mode to Receive Serial Commands

Syntax: OPEN nn<cr>

Where

nn = Address of the transmitter (0 ... 99)

The **OPEN** command sets the bus temporarily in **STOP** mode so that the **SMODE** command can be issued.

Example:

```
>open 4
Device:  4 line opened for operator commands
>
```

Set Transmitter in POLL Mode

Syntax: CLOSE<cr>

In STOP mode: the command **OPEN** has no effect, **CLOSE** sets the transmitter temporarily in POLL mode.

In POLL mode: the command **OPEN** sets the transmitter temporarily in STOP mode, command **CLOSE** returns the instrument to POLL mode.

Example:

Relative humidity calibration is performed at transmitter 2, which is in POLL mode.

```
>open 2
```

Opens the line to transmitter 2.

```
>crh
```

Calibration started.

```
...
>close
```

Line closed.

AKRIBIS · www.akribis.info · contacto@akribis.info

Output Formatting

Set Serial Output Format

Syntax: FORM x<cr>

Where

x = Formatter string

The **FORM** command can be used to change the output format of the **SEND** and **R** commands.

A formatter string consists of quantities and modifiers: use the modifiers presented in Table 11 and quantities presented in Table 12 when configuring the output format.

Use the **FORM /** command to return the default output form.

Table 11 Modifiers

Modifier	Description
x.y	Length modifier (whole numbers and decimal places)
#t	Tabulator
#r	Carriage return
#n	Line-feed
""	String-constant
U5	Unit field and length (unit can be changed with the UNIT command)

Table 12 Analog Output Quantity Abbreviations

Quantity	Abbreviation
1§aw water activity	aw
%RS relative saturation	%RS
T Temperature	T
ppm (for transformer oil only)	ppm

Example:

```
>form "aw="1.2 aw #r#n
aw=0.79

>form "aw="1.2 aw U3 #t "ppm="3.1 ppm " " U5 #t "T="3.1 T
U3 #r#n
aw=0.78          ppm= 53.4 ppm   T= 27.3'C
>

>send
2000-01-01 20:56:27 N    0 aw=0.78      ppm= 53.2 ppm   T=
27.2'C
>
```


AKRIBIS · www.akribis.info · contacto@akribis.info

Set Time and Date

Syntax: TIME<cr>

Syntax: DATE<cr>

Sets the time and date to the transmitter.

Example:

```
>time
Current time is 04:12:39
Enter new time (hh:mm:ss) ? 12:24:00
>date
Current date is 2000-01-01
Enter new date (yyyy-mm-dd) ? 2013-06-30
>
```

NOTE	Time and date are cleared to 2000-01-01 00:00:00 at reset.

NOTE	Only about 1 % accuracy is obtained with the software clock.

Add Time and Date to SEND and R Outputs

Syntax: FTIME x<cr>

Syntax: FDATE x<cr>

Where

x = ON/OFF

The command enables or disables output of time and date to the serial line.

```
>send
aw= 0.2 aw T= 31.0 'C
>ftime on
Form. time     : ON
>send
03:47:59 aw= 0.2 aw T= 31.0 'C
>fdate on
Form. date     : ON
>send
2000-01-01 03:48:03 aw= 0.2 aw T= 31.0 'C
>
```


AKRIBIS · www.akribis.info · contacto@akribis.info

Select Metric or Nonmetric Output Units

Syntax: UNIT x<cr>

Where

x = M or N
M = metric units
N = nonmetric units

Quantity	Metric Unit	Non-Metric Unit
aw water activity	aw	aw
%RS relative saturation	%RS	%RS
T Temperature	°C	°F
ppm (for transformer oil only)	ppm	ppm

Setting, Scaling and Testing the Analog Outputs

You can select for the two outputs

- current or voltage range (0...20 mA/4...20 mA, 0 … 5/10 V,1 … 5 V available through scaling) and
- output parameter (aw/ ppm*/ T).

and scale the two outputs according to your needs.

*****for transformer oil only

Set Analog Outputs

Syntax: AMODE ch1 ch2<cr>

Where

ch1 and ch2 = I0 = 0 ... 20 mA
I1 = 4 ... 20 mA
U1 = 0 … 5 V*
U2 = 0 … 10 V*

*Voltage output applicable from software version 2.0.1 onward.

Example:

```
>amode i1 u1
Ch1 output mode: 4...20mA
Ch2 output mode: 0...5V
>
```


AKRIBIS · www.akribis.info · contacto@akribis.info

NOTE 1 … 5 V output can be selected when ordering the device. The 1 .. 5 output is based on the 0 … 5 V output mode, but has been adjusted to 1 … 5 V by scaling the valid range to 1 … 5. In the scaled 1 … 5 V output mode, 0 V is reserved for error output (**AERR** set to 0).

If the output includes the reminder 'remember to set jumpers', ignore the reminder.

Select Parameter for Analog Outputs

Syntax: ASEL xxx yyy<cr>

Where

xxx = Quantity of channel 1
yyy = Quantity of channel 2

After entering the command, the low and high values of each channel are displayed one row at a time and a new value can be entered. Enter a new value and press <cr> to move to the next row, or press <cr> without entering a value to keep the current setting.

Use abbreviations shown in Table 13 Analog Output Quantity Abbreviations below.

Table 13 Analog Output Quantity Abbreviations

Quantity	Abbreviation
aw water activity	aw
%RS relative saturation	%RS
T Temperature	°C
ppm (for transformer oil only)	ppm

Examples:

```
>asel aw t
Ch1 aw   lo    :     0.00         ?
Ch1 aw   hi    :     1.00         ?
Ch2 T    lo    :   -40.00 'C      ?
Ch2 T    hi    :    60.00 'C      ?
>asel t ppm
Ch1 T    lo    :   -40.00 'C      ?
Ch1 T    hi    :    60.00 'C      ?
Ch2 ppm  lo    :     0.00 ppm     ?
Ch2 ppm  hi    :  5000.00 ppm     ?
>
```


AKRIBIS · www.akribis.info · contacto@akribis.info

Scale Analog Outputs

Syntax: ASCL<cr>

Example:

```
>ascl
Ch1 T    lo    :   -40.00 'C      ? -20
Ch1 T    hi    :    60.00 'C      ? 40
Ch2 ppm  lo    :     0.00 ppm     ? 0
Ch2 ppm  hi    :  5000.00 ppm     ? 3000
>ascl
Ch1 T    lo    :   -20.00 'C      ?
Ch1 T    hi    :    40.00 'C      ?
Ch2 ppm  lo    :     0.00 ppm     ?
Ch2 ppm  hi    :  3000.00 ppm     ?
```

The ppm calculation is only used for transformer oils.

Test Analog Outputs

Syntax: ITEST aa.aaa bb.bbb<cr>

The operation of the analog outputs is tested by forcing the outputs to given values. The values in the analog outputs can then be measured with a current/voltage meter.

Where

aa.aaa	=	Current/voltage value to be set for channel 1
bb.bbb	=	Current/voltage value to be set for channel 2

Example:

```
>itest 8.30 6.40
    8.30000mA  2c30    6.40000mA  2278
>
```

The **ITEST** command output includes internal debugging values shown in hexadecimal format (`2c30` and `2278` in the example above).

The set values remain valid until you issue the **ITEST** command without readings or reset the transmitter.

AKRIBIS · www.akribis.info · contacto@akribis.info

Test Analog Outputs for Desired Readings

Syntax: AQTEST x yyy.yyy<cr>

Using the **AQTEST** command, you can test the analog output by forcing the output to correspond to a chosen value.

Where

x	=	Output quantity (aw / T / ppm)
yyy.yyy	=	Value

For example:

```
>aqtest aw 0.5
CH1 aw  :    0.5000  aw   10.000mA
CH2 T   :    22.3  'C     7.568mA
>
```

The set values remain valid until you give the command **AQTEST** without a value or **RESET** the transmitter.

Set Error Outputs

Syntax: AERR<cr>

The factory default state for analog outputs during error condition is 0 mA. Be careful when selecting the new error value: the error state of the transmitter should not cause problems in process monitoring.

Example:

```
>aerr
Ch1 error out  : 0.000mA ?
Ch2 error out  : 0.000mA ?
```

NOTE	The error output value must be within the output type's valid range.

NOTE	The error output value is shown only when there are minor electrical faults such as a humidity sensor open circuit. When there is a severe device malfunction, such as an analog output electronics failure or a microprocessor ROM/RAM failure, the error output value is not necessarily shown.

AKRIBIS · www.akribis.info · contacto@akribis.info

Other Commands

Check Transmitter Settings

Syntax: ?<cr>

Syntax: ??<cr>

Use the **?** command to check the current transmitter configuration. The **??** command is similar but can also be used if the transmitter is in POLL mode.

Example (factory default settings):

```
>?
MMT310 / 1.03
PRB serial nr  : V1234567
Calibration    : 2003-03-25
Cal. info      : NU/HMK15
Output units   : metric
Pressure       : 1013.25 hPa
RS232 settings
Address        : 2
Output interval: 1 MIN
Baud P D S     : 4800 E 7 1
Serial mode    : STOP
Analog outputs
Ch1 output mode: 0 ...20mA
Ch2 output mode: 4 ...20mA
Ch1 error out  : 0.000mA
Ch2 error out  : 0.000mA
Ch1 T    lo    :   -40.00 'C
Ch1 T    hi    :    60.00 'C
Ch2 ppm  lo    :     0.00 ppm
Ch2 ppm  hi    :  5000.00 ppm
>
```


AKRIBIS · www.akribis.info · contacto@akribis.info

Serial Bus Echo

Syntax: ECHO x<cr>

Where

x = ON/OFF (default = ON)

The command enables or disables echo of characters received over the serial line.

All Devices in POLL Mode Send Their Addresses

Syntax: FIND<cr>

List Commands

Syntax: HELP<cr>

Set Result Filtering

Syntax: FILT xx<cr>

Enable or disable the filtering or select the extended filter to reduce noise of the measurement.

Where

x = ON, OFF or EXT
ON = Short filter of about 15 s (the measurement output will show the average value of the last 15 s measurement data)
OFF = No filtering (default)
EXT = Extended filter of about 1 min (the measurement output will show the average value of the last 1 min measurement data)

AKRIBIS · www.akribis.info · contacto@akribis.info

Reset Transmitter

Syntax: RESET<cr>

This command resets the device, resulting in a short start-up delay. The serial interface mode (STOP, RUN or POLL) selected with the **SMODE** command is taken into use at restart.

Display Error Messages

Syntax: ERRS<cr>

Display transmitter error messages. If there are no errors present, a PASS will be returned.

Examples:

```
>errs
PASS
>

>errs
FAIL
Error: Temperature measurement malfunction
Error: Humidity sensor open circuit
>
```

In case of a constant error, please contact a Vaisala Service Center.

For information on contacting Vaisala Service Centers, see www.vaisala.com/servicecenters.

AKRIBIS · www.akribis.info · contacto@akribis.info

CHAPTER 5

MAINTENANCE

This chapter provides information that is needed in basic maintenance of the MMT310.

Periodic Maintenance

Calibration Interval

MMT310 is fully calibrated and adjusted as shipped from factory. Typical calibration interval is one year. In certain applications it may be advisable to do more frequent checks. Calibration needs to be done always when there is reason to believe that the device is not within the accuracy specifications.

You can carry out calibration and adjustment by yourself, or contact Vaisala technical support (see section Technical Support on page 53) for information about calibration services. For more information on calibration, see section Calibration and adjustment on page 55.

Replacing Consumables

Changing the Filter

Replace the filter if it is contaminated. New filters are available from Vaisala (see section Spare Parts and Accessories on page 69).

CAUTION	Be careful when changing the filter, since it is easy to break the sensor when the filter is removed.

CAUTION	If the transmitter is installed in a pressurized chamber, always make sure that the pressure of the chamber is equalized with the ambient pressure prior to removing the transmitter. When the transmitter is removed for maintenance, cap the hole with a capped nut. This way, the chamber can be pressurized although the transmitter is not in place. Plugs are available from Vaisala for ISO threaded connections.

AKRIBIS · www.akribis.info · contacto@akribis.info

When replacing the filter, wear clean gloves to avoid depositing dirt or oil on the filter.

Replace the filter as follows:

1. Turn the filter counterclockwise until it is loose.
2. Pull the filter straight out carefully. **Do not damage the sensor**.
3. Take the new filter, and insert it to the filter thread.
4. Tighten the new filter to 5 Nm by turning it clockwise.

Changing the Sensor

NOTE	When replacing the sensor, the new sensor must be of the same type as the old sensor (HUMICAP180L2 for MMT310). Information on Vaisala sensors is available online at www.vaisala.com/sensorinfo.

Changing the sensor should be considered corrective maintenance, and it is not necessary in normal operation. If the accuracy of the transmitter does not seem to be within specification, it is more likely that the transmitter is in need of calibration and adjustment, and not sensor replacement. See section Calibration and adjustment on page 55.

1. Remove the filter from the probe. See the instructions in section Changing the Filter on page 51.
2. Remove the damaged sensor and insert a new one. Handle the new sensor by the plastic socket. DO NOT TOUCH THE SENSOR PLATE.
3. Perform a calibration and adjustment as instructed in section Relative Humidity Calibration after Sensor Change on page 61.
4. Attach a new filter on the probe. When using the stainless steel filter, take care to tighten the filter properly (recommended force 5 Nm).

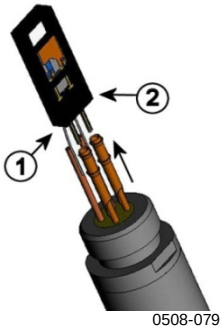

Figure 14 Changing the Sensor

The following numbers refer to Figure 14 above:

1 = Pull out the sensor
2 = Plastic socket

AKRIBIS · www.akribis.info · contacto@akribis.info

Clean the Sensor Before Storing the Transmitter

Clean the used sensor with instrument air to blow out existing oil or gently first flush with heptane (C7H16) and dry with instrument air to prevent oxidation of the sensor. The oxidation of the sensor can cause extended response times or drifting.

Technical Support

For technical questions, contact Vaisala technical support by e-mail at helpdesk@vaisala.com. Provide at least the following supporting information:

- Name and model of the product in question
- Serial number of the product
- Name and location of the installation site
- Name and contact information of a technically competent person who can provide further information on the problem.

For contact information of Vaisala Service Centers, see www.vaisala.com/servicecenters.

AKRIBIS · www.akribis.info · contacto@akribis.info

This page intentionally left blank.

AKRIBIS · www.akribis.info · contacto@akribis.info

CHAPTER 6
CALIBRATION AND ADJUSTMENT

This chapter describes the calibration and adjustment procedures. Note that after adjustment, the original calibration certificate shipped with the product is not valid anymore.

The MMT318 and MMT317 are calibrated as shipped from the factory. Typical calibration interval is one year. Depending on the application it may be good to make the first calibration check earlier.

NOTE	When measuring moisture in transformer oil, the recommended calibration interval is 3 years.

Relative humidity calibration must be done always after sensor change.

Calibration of the MMT318 and MMT317 can be carried out by the user according to the instructions given in this chapter.

Vaisala recommends using the calibration services offered by Vaisala. Vaisala Service Centers perform calibrations and adjustments as well as repair and spare part services, and offer accredited calibrations and maintenance contracts.

For Vaisala Service Center contact information, see www.vaisala.com/servicecenters.

Calibration services can also be ordered online at store.vaisala.com.

CAUTION	If you think the MMT310 is not measuring correctly, calibration and adjustment is not the first thing to do. Try the following first: - Make sure heat sources or temperature differences are not interfering with the measurement. - Always wait for the measurement to stabilize.

NOTE	For an introduction to calibration, order or download the free calibration book from Vaisala at the following address: www.vaisala.com/calibrationbook

AKRIBIS · www.akribis.info · contacto@akribis.info

Preparations Before the Calibration

Before calibration, clean the used sensor with instrument air to blow out existing oil, or gently first flush with heptane (C7H16) and dry with instrument air to decrease response time.

NOTE	It is important to clean the sensor before calibration as a dirty sensor can contaminate the salt bath and change the reference condition.

Relative Humidity Calibration and Adjustment (in Two Points)

Relative humidity calibration and adjustment of the MMT318 and MMT317 is done by using two reference humidities (low end and high end). The difference between the two humidity references must be at least 50% RH.

An easy calibration can be done by using Vaisala Humidity Calibrator HMK15. When using the HMK15 calibrator, use the adapter fitting (13.5 mm) with the MMT318 and MMT317 probe.

Before calibration the transmitter must be set to adjustment mode by pressing the adjustment button (see Figure 15 below).

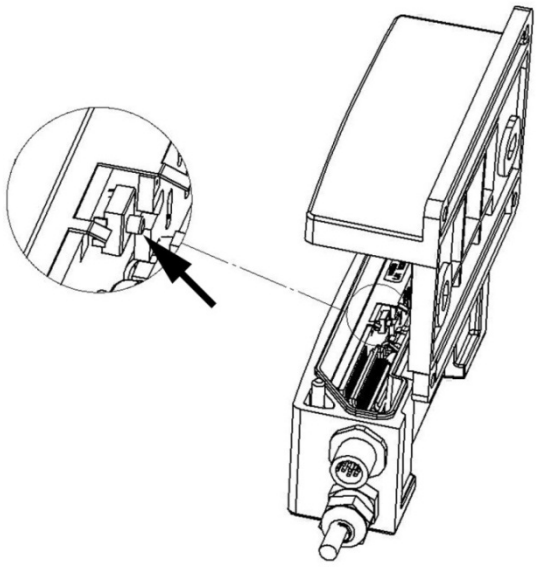

0507-048

Figure 15 Location of Adjustment Button

AKRIBIS · www.akribis.info · contacto@akribis.info

Low End Adjustment

1. Remove the transmitter unit from the mounting plate (see page 18), and press the adjustment button once (see Figure 15 on page 56).
2. Remove the filter from the probe and insert the probe head into a measurement hole of the dry end reference chamber (for example LiCl: 11 % RH in the humidity calibrator HMK15, use the adapter fitting (13.5 mm)).
3. Wait at least 30 minutes for the sensor to stabilize.
4. Issue the **CRH** command and press **ENTER.**
   Type **C** and press **ENTER** a few times to check if the reading is stabilized.
5. When the reading is stabilized, give the reference humidity after the question mark and press **ENTER.**

```
>crh
RH  :    11.25  Ref1 ? c
RH  :    11.25  Ref1 ? c
RH  :    11.25  Ref1 ? c
RH  :    11.24  Ref1 ? c
RH  :    11.24  Ref1 ? 11.3
Press any key when ready ...
```

   Now the device is waiting for the high end reference. Carry out the high end adjustment as instructed in the following section.

AKRIBIS · www.akribis.info · contacto@akribis.info

High End Adjustment

6. After you have performed the low end adjustment, insert the probe head into a measurement hole of the high end reference chamber (e.g. NaCl: 75 % RH chamber in the humidity calibrator HMK15, use the adapter fitting (13.5 mm)). Note that the difference between the two humidity references must be at least 50% RH.
7. Let the probe stabilize at least 30 minutes. You can follow the stabilization by pressing any key, typing **C** and pressing **ENTER**.
8. When stabilized, type the high end reference value after the question mark and press **ENTER**.

```
crh
RH  :    11.25  Ref1 ? c
RH  :    11.24  Ref1 ? c
RH  :    11.24  Ref1 ? 11.3
Press any key when ready ...

RH  :    75.45  Ref2 ? c
RH  :    75.57  Ref2 ? c
RH  :    75.55  Ref2 ? c
RH  :    75.59  Ref2 ? 75.5
OK
>
```

OK indicates that the calibration has succeeded.

9. Take the probe out of the reference conditions and replace the filter. Take care to tighten the filter properly, recommended force 130 Ncm.
10. If needed, give the calibration information (date and text) to the transmitter's memory, see the serial commands on page 61.
11. Reset the transmitter by giving the **RESET** command. The transmitter returns to normal mode.

AKRIBIS · www.akribis.info · contacto@akribis.info

Temperature Calibration and Adjustment (in One Point)

1. Remove the transmitter unit from the mounting plate (see page 18) and press the adjustment button once (see Figure 15 on page 56).
2. Remove the probe filter (see instructions on page 51) and insert the probe into the reference temperature.
3. Let the sensor stabilize.
4. Enter the command **CT** and press **Enter**.
5. Type **C** and press **Enter** a few times to check if the reading is stabilized.
6. When the reading is stabilized, type the reference temperature after the question mark and press **Enter** three times.

```
>ct
T   :    16.06  Ref1 ? c
T   :    16.06  Ref1 ? c
T   :    16.06  Ref1 ? c
T   :    16.06  Ref1 ? c
T   :    16.06  Ref1 ? c
T   :    16.06  Ref1 ? 16.0
Press any key when ready ...
T   :    16.06  Ref2 ?
OK
>
```

   OK indicates that the calibration has succeeded.

7. Take the probe out of the reference conditions and replace the filter. When using the stainless steel filter, take care to tighten the filter properly (recommended force 130 Ncm).
8. If needed, record the calibration information (text and date) to the memory of the transmitter, see Set Calibration Information Text on page 61 and Set Calibration Date on page 61.
9. Reset the transmitter by issuing the **RESET** command. The transmitter returns to normal mode.

AKRIBIS · www.akribis.info · contacto@akribis.info

Revert Factory Calibration

Syntax: LI<cr>

1. Remove the transmitter unit from the mounting (see page 18) and press the adjustment button once (see Figure 15 on page 56).
2. Issue the **LI** command and set the offset value to 0 and gain value to 1.

```
>li
RH offset :       -0.6000000 ? 0
RH gain   :       1.00000000 ? 1
T  offset :       0.00000000 ? 0
T  gain   :       0.40000000 ? 1
>
```

3. Reset the transmitter by giving the **RESET** command.
   The transmitter returns to normal mode.

View Current Offset and Gain Adjustment

View the currently applied standard user adjustment offset and gain with the **L** command.

Syntax: L<cr>

Example:

```
>l
RH offset :       0.00000000
RH gain   :       1.00000000
T  offset :       0.00000000
T  gain   :       1.00000000
>
```


AKRIBIS · www.akribis.info · contacto@akribis.info

Relative Humidity Calibration after Sensor Change

Syntax: FCRH<cr>

The transmitter asks and measures relative humidity and calculates the calibration coefficients. This two-point adjustment needs to be performed after a sensor change. Follow the more detailed calibration instructions on page 56, but instead of the **CRH** command, use the **FCRH** command.

```
>FCRH
RH     :    1.82 1. ref    ?    0
Press any key when ready...
RH     :    74.22    2. ref    ? 75
OK
>
```

OK indicates that the calibration has succeeded.

Set Calibration Information Text

Syntax: CTEXT<cr>

1. Remove the transmitter unit from the mounting (see page 18) and press the adjustment button once (see Figure 15 on page 56).
2. Issue the **LI** command and enter value 0 for offset and value 1 for gain.
3. Issue the **CTEXT** command and enter calibration information text.

Set Calibration Date

Syntax: CTEXT<cr>

1. Remove the transmitter unit from the mounting plate (see section Mounting the Transmitter/Removing the Transmitter Unit on page 18) and press the adjustment button once (see Figure 15 on page 56).
2. Issue the **LI** command and enter value 0 for offset and value 1 for gain.
3. Issue the **CDATE** command and set the calibration date.

Example:

```
CDATE 2001 12 11
Calibration    : 2001-12-11
>
```


AKRIBIS · www.akribis.info · contacto@akribis.info

Analog Output Calibration

Syntax: ACAL<cr>

Connect the MMT310 to a multimeter in order to measure either current or voltage depending on the selected output type. Issue the **ACAL** command. Then type the multimeter reading and press **Enter**.

Example (current outputs):

```
>acal
Ch1    I1   (mA) ?    2.046
Ch1    I2   (mA) ?    18.087
Ch2    I1   (mA) ?    2.036
Ch2    I2   (mA) ?    18.071
>
```

Adjustment Using an MI70 Indicator

You can use the MI70 handheld indicator to adjust the following in MMT310:

- Temperature (T)
- Relative humidity (RH)
- Pressure compensation value for humidity measurement (environment settings)

Note that starting the adjustment mode in MI70 requires pressing the adjustment button on the MMT310 board. See Figure 15 on page 56 for the location of the adjustment button.

NOTE	When adjusting both relative humidity and temperature, make the temperature adjustment first.

Starting MI70 Adjustment

1. Connect the transmitter to the MI70 hand-held indicator using the connection cable (optional accessory, Vaisala order code DRW216050SP).
2. Turn on the MI70.
3. Press the MMT310 adjustment button (see Figure 15 on page 56) to start the adjustment mode. A notification about starting the adjustment mode is displayed on the MI70 screen.
4. Press OK to enter the adjustment menu. The available adjustment options are displayed (RH or T). You can also view the date of last adjustment.

AKRIBIS · www.akribis.info · contacto@akribis.info

Use the arrow buttons to highlight RH or T and press SELECT to choose the parameter for adjustment.

For RH adjustment instructions, see section Adjusting RH with MI70.

For T adjustment instructions, see section Adjusting T with MI70.

Adjusting RH with MI70

Selecting RH in the main adjustment menu brings up a notification about checking environment settings. Select YES to access the environment settings before performing the RH adjustment, or NO to continue to RH adjustment without changing the current environment settings. Select ADJUST to access the RH adjustment options.

The following RH adjustment options are available:

- 1-point adjustment
- 2-point adjustment
- LiCl – NaCl auto

1-point RH Adjustment

Usually it is recommended to make an adjustment in two reference humidities. If the adjustment is done by using only one reference humidity (1-point adjustment), select the reference humidity so that it represents the measuring environment. Make the adjustment in one point as instructed in the 2-point RH Adjustment section on page 63 (select 1-point adjustment instead of 2-point adjustment and follow the display instructions).

2-point RH Adjustment

Select 2-point adjustment in the RH adjustment menu and follow the steps below:

1. Set the probe to a lower reference relative humidity. You can follow the stabilization from the GRAPH display. Press READY when the reading is stabilized.
2. Enter the lower reference humidity value by using the arrow buttons. Press OK.
3. Set the probe to the higher reference humidity. Press READY when the reading is stabilized. You can follow the stabilization from the GRAPH display.
4. Enter the higher reference relative humidity value by using the arrow buttons. Press OK.

AKRIBIS · www.akribis.info · contacto@akribis.info

5. To confirm the adjustment, press ⊖ YES. To cancel entering the adjustment, press ⊖ NO to return to the adjustment mode display without making any changes.
   Note that if the difference between the two references is less than 50 %, adjustment cannot be done.

Once confirmed, the adjustment has been carried out. Press ⊖ BACK to exit the RH adjustment mode and return to the main adjustment options. Press ⊖ EXIT to quit the adjustment mode and return to the basic MI70 view.

LiCl – NaCl Automatic Adjustment

LiCl-NaCl automatic adjustment is a two-point adjustment in reference humidities of 11.3 % (LiCl) and 75 % (NaCl). You do not have to enter the reference values, the MI70 displays the accurate value based on the measured temperature and the Greenspan table stored into the memory of the MI70.

To make the adjustment, select LiCl – NaCl auto in the RH adjustment menu and follow the steps below:

1. Set the probe to the LiCl reference humidity. You can follow the stabilization from the ⊖ GRAPH display. Press ⊖ READY when the reading is stabilized.
2. Set the probe to the NaCl reference humidity. You can follow the stabilization from the ⊖ GRAPH display. Press ⊖ READY when the reading is stabilized.
3. After the NaCl reference humidity measurement is done, MI70 checks if you want to use this 2-point adjustment. Press ⊖ OK to confirm the adjustment.

Once confirmed, the adjustment has been carried out. Press ⊖ BACK to exit the RH adjustment mode and return to the main adjustment options. Press ⊖ EXIT to quit the adjustment mode and return to the basic MI70 view.

AKRIBIS · www.akribis.info · contacto@akribis.info

Adjusting T with MI70

Selecting T in the main adjustment menu brings up the current T measurement. Select ADJUST to choose the adjustment type. The following T adjustment options are available:

- 1-point adjustment
- 2-point adjustment

NOTE	Temperature adjustment in one or two points can be done if there is reason to believe that the adjustment is changed. If the adjustment is done only in one point, the reference condition is used to represent the measuring environment.

1-point T adjustment

Select 1-point adjustment in the T adjustment menu and follow the steps below:

1. Set the probe to a reference temperature. You can follow the stabilization from the GRAPH display. Press READY when the reading is stabilized.
2. Give the reference temperature by using the arrow buttons and press OK.
3. To confirm the adjustment, press YES. To cancel entering the adjustment, press NO to return to the adjustment mode display without making any changes.

Once confirmed, the adjustment has been carried out. Press BACK to exit the T adjustment mode and return to the main adjustment options. Press EXIT to quit the adjustment mode and return to the basic MI70 view.

2-point T adjustment

Select 2-point adjustment in the T adjustment menu and follow the steps below:

1. Set the probe to a lower reference temperature. You can follow the stabilization from the GRAPH display. Press READY when the reading is stabilized.
2. Give the lower reference temperature by using the arrow buttons and press OK.
3. Set the probe to a higher reference temperature. You can follow the stabilization from the GRAPH display. Press READY when the reading is stabilized.

AKRIBIS · www.akribis.info · contacto@akribis.info

4. Give the higher reference temperature by using the arrow buttons and press ⊖ OK.
5. To confirm the adjustment, press ⊖ YES. To cancel entering the adjustment, press ⊖ NO to return to adjustment mode display without making any changes.

Once confirmed, the adjustment has been carried out. Press ⊖ BACK to exit the T adjustment mode and return to the main adjustment options. Press ⊖ EXIT to quit the adjustment mode and return to the basic MI70 view.

Environment Settings

When you select RH adjustment for the first time from the adjustment main menu, MI70 asks if you want to check the environment settings (pressure compensation value for humidity measurement).

If you need to access the environment settings after this, exit the adjustment mode by selecting EXIT in the main adjustment menu and navigate to the environment menu from the MI70 main menu. To return to the adjustment mode, press the adjustment button on the MMT310 board.

Last Adjustment Date

To see the last adjustment date, select Last adjustment date in the main adjustment menu. You can also view this date from the Device information menu in the MI70 main menu.

AKRIBIS · www.akribis.info · contacto@akribis.info

CHAPTER 7

TECHNICAL DATA

This chapter provides the technical data of the MMT310.

Specifications

Table 14 Water Activity / Relative Saturation

Property	Description / Value
Measurement range a_w / %RS	a_w 0...1 (@-40...+180 °C/ -40...+356 °F) %RS 0 … 100 %RS
Accuracy (including nonlinearity, hysteresis and repeatability) When calibrated against salt solutions (ASTM E104-85)	a_w ±0.02 (0...0.9) ±2 %RS (0 ... 90 %RS) a_w ±0.03 (0.9...1.0) ±3 %RS (90 ... 100 %RS)
Response time (90 %) at +20 °C in still oil (with stainless steel filter)	10 min
Sensor	HUMICAP®180L2

Table 15 Temperature

Property	Description / Value
Measurement range	-70...+180 °C (-94...+356 °F)
Typical accuracy at +20 °C (+68 °F)	±0.2 °C (±0.36°F)
Temperature sensor	Pt 100 RTD Class F0.1 IEC 60751

AKRIBIS · www.akribis.info · contacto@akribis.info

Table 16 Electrical Connections

Property	Description / Value
Two analog outputs: selectable and scalable	Current: 0…20 mA or 4…20 mA Voltage: 0 … 5 V or 0 … 10 V (1 .. 5 V option available through scaling)
Typical accuracy of analog output at +20 °C (+68 °F)	±0.05% of full scale
Typical temperature dependence of analog output	0.005%/°C (0.003%/°F) of full scale
Serial output	RS232C
Connections	M12 8-pole connector with 5 m cable or Female 8-pin connector screw joint for cable diameter 4 ... 8 mm
Operating voltage	RS232 output 10 … 35 VDC Analog output 15 … 35 VDC Pressures over 10 bara min 24 VDC
Power consumption (Vsupply=35VDC)	RS-232: 12 mA Uout 10 V (10kOhm) Channel1 & Channel 2: 12 mA Iout 20mA (load 511Ohm) Channel 1 & Channel 2: 50 mA
External load	R_L < 500 Ohm
Startup time after powerup	3 s with analog output, 5s with serial line

Table 17 General

Property	Description / Value
Operating temperature range for electronics	40...+60 °C (-40 ... +140°F)
Storage temperature range	-55...+80 °C (-67 ... +176 °F)
Pressure range: MMT317 MMT318 (with ball valve up to 120 °C)	 0 ... 10 bar 0 ... 40 bar
Transmitter housing material	G-AlSI10Mg
Transmitter base material	PPS
Housing classification	IP 66
Cable feed through alternatives	8-pole connector with 5 m cable Female 8-pin connector screw joint for cable diameter 4...8 mm
Sensor protection	Stainless steel grid Stainless steel grid for high flow rates
Cable length	2, 5 or 10 m
Sensor head dimensions	length 170/400 mm, Ø 13.5 mm

AKRIBIS · www.akribis.info · contacto@akribis.info

Spare Parts and Accessories

Information on spare parts, accessories, and calibration products is available online at www.vaisala.com and store.vaisala.com.

Table 18 Spare Parts and Accessories

Description	Order Code
SENSORS	
Vaisala HUMICAP®180L2 moisture sensor	HUMICAP180L2
PT100 sensor	10429SP
FILTERS	
Stainless steel filter	HM47453SP
Stainless steel filter (high flow rate)	220752SP
TRANSMITTER MOUNTING ACCESSORIES	
Rain shield	ASM211103
PROBE MOUNTING ACCESSORIES	
Swagelok for 12mm Probe 3/8" ISO Thread	SWG12ISO38
Swagelok for 12mm Probe 1/2" ISO Thread	SWG12ISO12
Swagelok for 12mm Probe 1/2" NPT Thread	SWG12NPT12
Fitting Body ISO1/2 Solid Structrure	DRW212076SP
Fitting Body NPT1/2 Solid Structure	NPTFITBODASP
Sampling Cell with Swagelok Connectors	DMT242SC2
Ball Valve ISO1/2 with Welding Joint	BALLVALVE-1
Manual Press	HM36854SP
Plug Kit (ISO 1/2)	218773
Thread Adapter ISO1/2 to NPT1/2	210662
CONNECTION CABLES	
Connection cable to MI70 indicator/MM70	DRW216050SP
USB cable	238607
OTHER	
HMK15 Calibration Adapter for 12 mm Probes with >7 mm Sensor Pins	211302SP

AKRIBIS · www.akribis.info · contacto@akribis.info

Dimensions in mm (inches)

Transmitter Enclosure and Mounting Plates

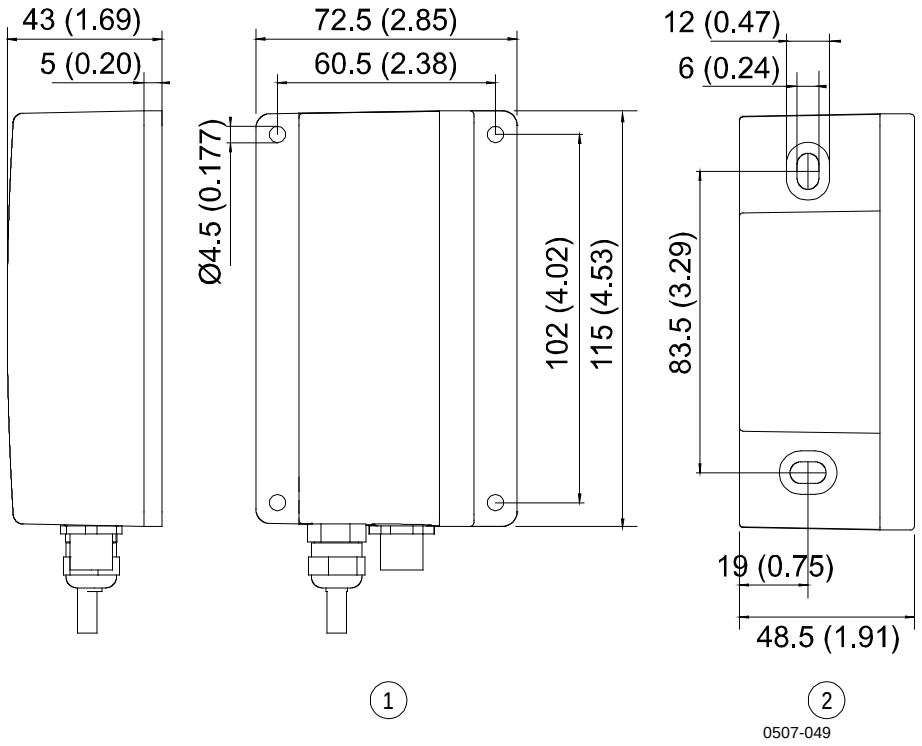

Figure 16 Transmitter Enclosure and Mounting Plate Dimensions

The following numbers refer to Figure 16 above. Mounting plate alternatives:

1 = Wall Plate/Cover (bigger plate with flange)
2 = Wall Plate/Cover (smaller plate without flange)

AKRIBIS · www.akribis.info · contacto@akribis.info

Rain Shield Dimensions

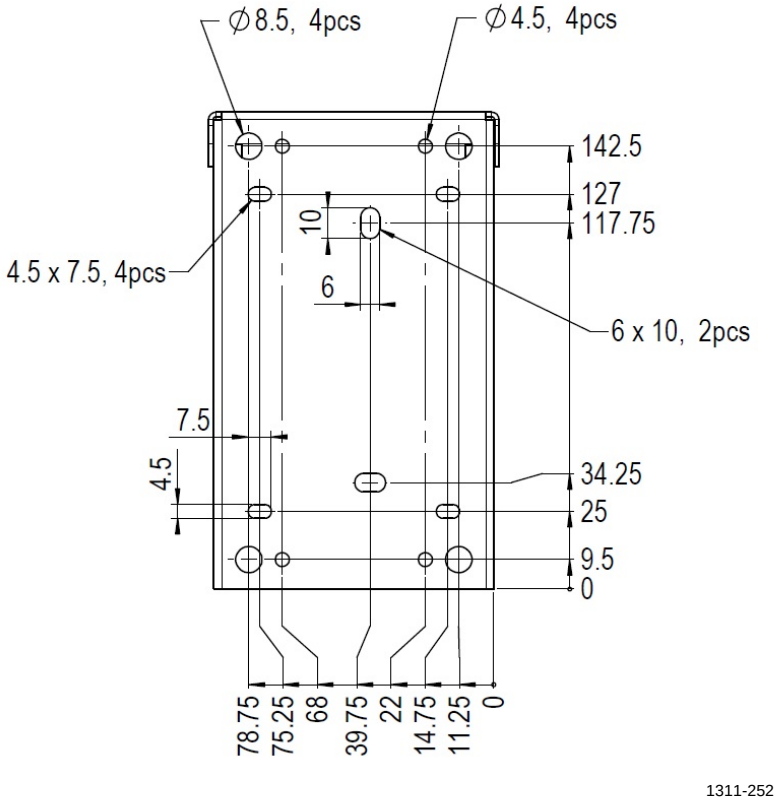

Figure 17 Rain Shield Dimensions (Back)

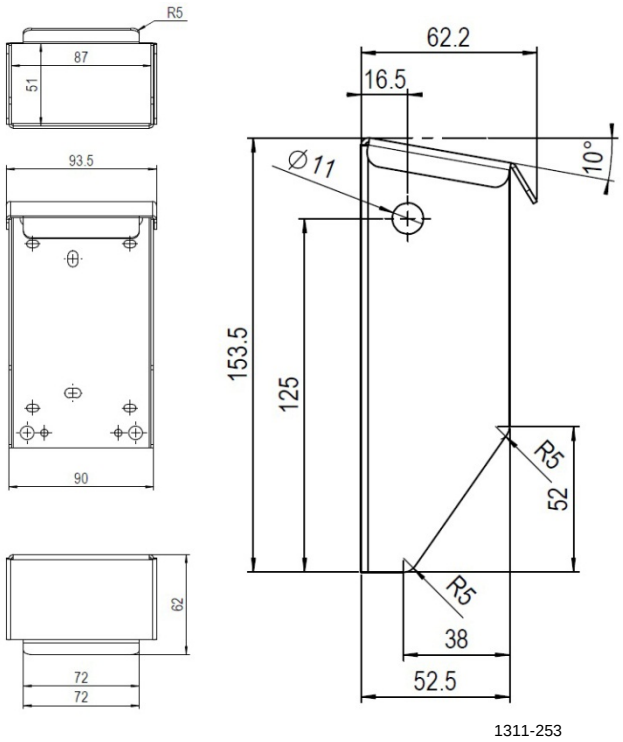

Figure 18 Rain Shield Dimensions (Side and Outer)

AKRIBIS · www.akribis.info · contacto@akribis.info

MMT318 Probe Dimensions

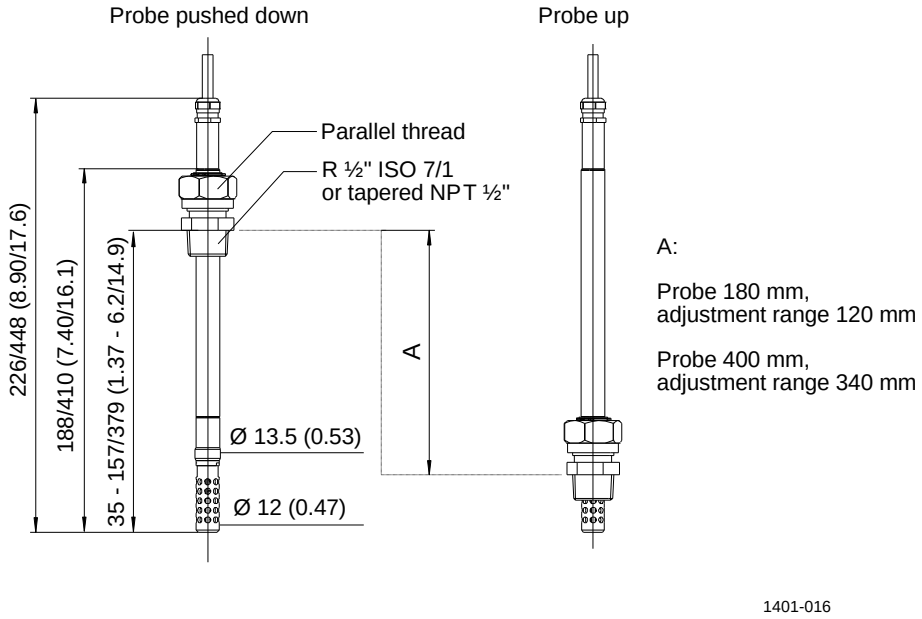

Figure 19 MMT318 Probe Dimensions

AKRIBIS · www.akribis.info · contacto@akribis.info

Ball Valve Set Dimensions

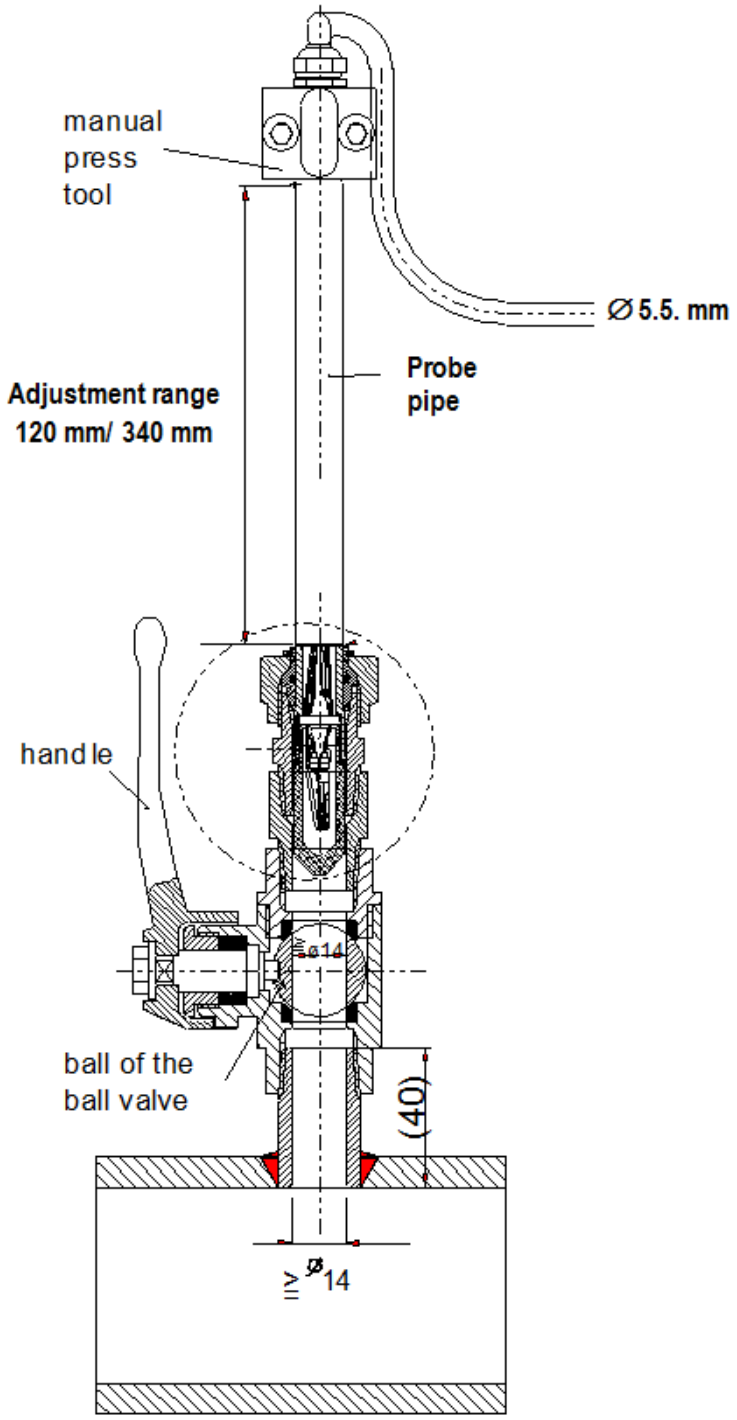

1401-015

Figure 20 Ball Valve Set Dimensions

AKRIBIS · www.akribis.info · contacto@akribis.info

MMT317 Probe with Optional Swagelok Connector, Dimensions

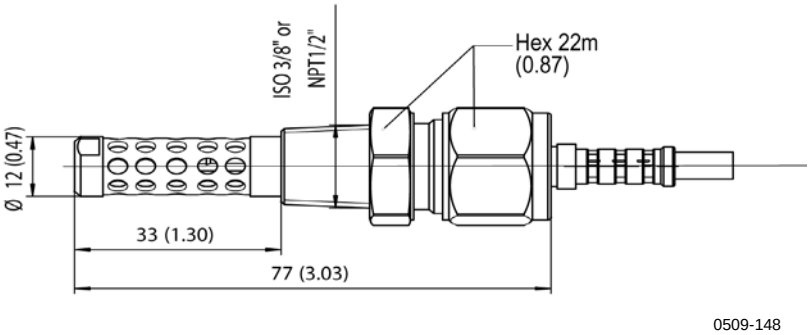

Figure 21 MMT317 Probe with Swagelok Connector

AKRIBIS · www.akribis.info · contacto@akribis.info

APPENDIX A
APPLICATIONS

This appendix describes typical applications where MMT310 is used.

Transformer Oils

The determination of moisture in oil is an essential part of a comprehensive transformer maintenance program. Oil immersed transformers rely on the oil for cooling, protection from corrosion and as an important component of their insulation. Excessive moisture content in oil causes accelerated ageing of the insulation materials and reduces their dielectric strength. In extreme cases this can result in arcing and short circuits within the windings. Accurate moisture measurements can also warn about leaks in the oil system, as water is absorbed from the surrounding air.

Heating and cooling of a transformer effect the moisture levels in oil. This is due to the fact that the water solubility of oil is temperature dependent. In general, water solubility increases as temperature rises (see Figure 22 on page 76). Changes in temperature also affect water desorption of the paper insulation around the transformer windings. Desorption of water from the insulation increases as temperature raises and the surrounded oil absorbs desorbed water. Moisture level in oil is thus a true indicator of moisture present in the paper insulation.

In addition, it must be noted that oil’s capacity to absorb water depends both on the chemical structure of the oil and the additives.

The water concentration of transformer oil is usually 0...80 ppm and the temperature range of the oil 0...100ºC.

AKRIBIS · www.akribis.info · contacto@akribis.info

Figure 22 below illustrates the water solubility of mineral transformer oil as a function of temperature. The margins show the range of variation of water solubility found in mineral oils.

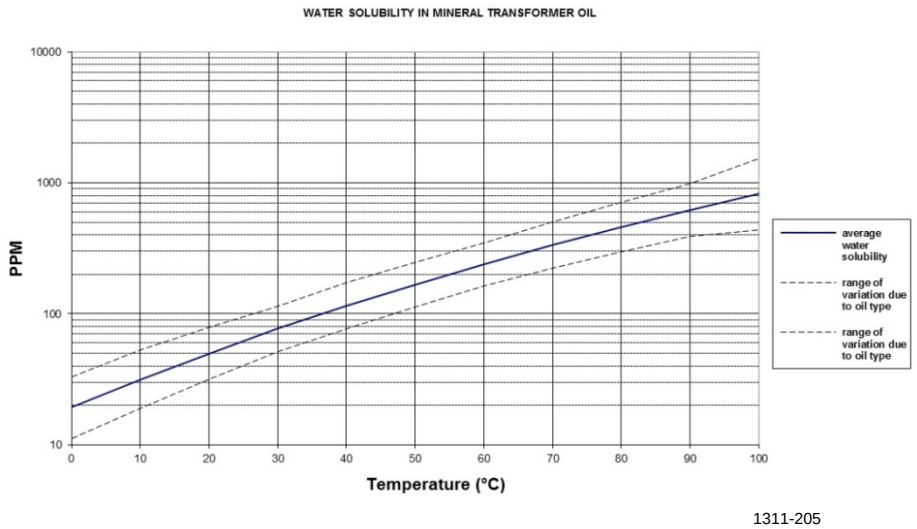

Figure 22 The Water Solubility of Transformer Oils Versus Temperature

PPM Calculation for Transformer Oils

Traditionally, moisture in transformer oil is measured in ppm units. The ppm output shows the average *mass concentration of water* in oil.

MMT318 and MMT317 have an option for ppm output, provided that this has been selected when ordering the transmitter.

NOTE	**Silicone based oils** must use MMT318 / MMT317 with the Calculation Model With Oil Specific Coefficients.

AKRIBIS · www.akribis.info · contacto@akribis.info

Calculation Model with Average Coefficients

The calculation model of MMT318 and MMT317 is based on the average water solubility behaviour of transformer oils. The ppm output is calculated as follows:

$$ppm = aw \times 10^{(A/(T+273.16)+B)} \quad (1)$$

Where aw= water activity
A,B= coefficients (average/oil specific)
T= temperature (ºC)

Generally, measurements with MMT318 and MMT317 have an accuracy better than 10 % of the reading. If additional accuracy is needed, see section Calculation Model with Oil Specific Coefficients below.

NOTE The internal calculation in ppm conversion uses a_w also when only %RS output is selected when ordering MMT310.

To convert %RS to a_w, divide the %RS quantity by 100:
$a_w = (\%RS / 100)$

Calculation Model with Oil Specific Coefficients

For additional accuracy, the oil specific calculation model can be used both for mineral and silicon based oils. An oil sample has to be sent to Vaisala for modelling. As a result, the specific coefficients (A and B: see formula in section Calculation Model with Average Coefficients) for the transformer oil are determined by Vaisala. Using these coefficients increases measurement accuracy.

The determined coefficients of the transformer oil can be programmed to the MMT318 and MMT317 by Vaisala or by the user according to the instructions presented on page 78 .

NOTE The calculation model with oil specific coefficients is always needed for **silicone based oils.**

AKRIBIS · www.akribis.info · contacto@akribis.info

PPM Calculation Setting

Calculation Setting (Calculation Model with Average Coefficients)

Give the **OIL ON** command when you are measuring moisture in oil and want to have ppm output.

Syntax: OIL x <cr>

x= ON/OFF

Example:

```
>oil on
Oil ppm        : ON
>oil
Oil ppm        : ON
Oil[0]        :  -1.66269994E+03
Oil[1]        :   7.36999989E+00
>
```

Changing the Calculation Coefficients (Calculation Model with Oil Specific Coefficients)

1. Press the blue adjustment button on the MMT310 board (see Figure 15 on page 56) to enable feeding of coefficients.
2. Give the **OIL** command.
   OIL <cr>
3. Type the first coefficient after the question mark and press **ENTER.**.
4. Type the second coefficient after the second question mark and press **ENTER**.
5. Reset the transmitter by giving the **RESET** command. Turn the power off and back on to return the transmitter to the normal mode.

Example:

```
>oil
Oil ppm        : ON
Oil[0]        :  -1.66269994E+03  ?
Oil[1]        :   7.36999989E+00  ?
     >
```


AKRIBIS · www.akribis.info · contacto@akribis.info

Technical Data

Typical measuring range	0...80* ppm (0...100ºC) *Upper edge limited to saturation
Accuracy (Calculation Model with Average Coefficients)	Temperatures > 30 ºC: better than 10 % of the reading Temperatures < 30ºC: see Figure 23 below.

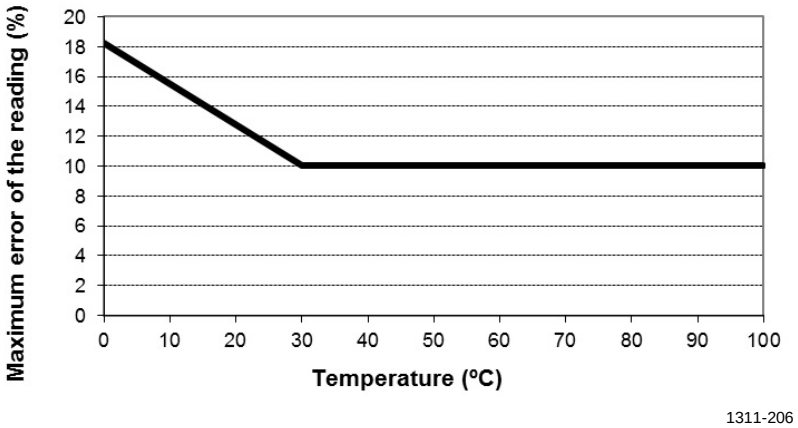

Figure 23 Maximum Errors Caused by Deviation of Mineral Oils Using Calculation Model with Average Coefficients

Temperature

Measurement range	-40...+180ºC

Response times (with stainless steel filter)

In still air (20ºC)	10 s
In still transformer oil (20ºC)	< 10 min

AKRIBIS · www.akribis.info · contacto@akribis.info

Paper Machine Application

Typically, a paper machine contains two or three separate lubrication systems. Usually, one is located at the wet end and the other at the dry end. There is a certain amount of free moisture constantly present which means that there is a risk of this moisture coming into contact with the machine bearings. The most common reasons for the entrance of water are an inadequate sealing of the housing and cleaning with high pressure. However, accidental leakages from oil coolers and other equipment may also cause damage.

In paper machines, the oil should absorb water while lubricating the bearings and then release this water when collected into the reservoir. It is to be noted that bearings should never be exposed to oils that have a high water content; this is especially important during standstill because the risk for corrosion process increases as the oil temperature decreases. It is essential to monitor the water content and keep it on a suitable level.

When measuring the water content of oil in paper machines, it would be useful to measure the water activity before an oil reservoir and from a pressure line flow. This way, the performance of dehumidifiers can be kept under control to ensure that no free water reaches the bearings.

AKRIBIS · www.akribis.info · contacto@akribis.info

www.vaisala.com

M210474EN

AKRIBIS · www.akribis.info · contacto@akribis.info