USER GUIDE

MMT162

Vaisala · Authorized Partner

Distributed by AKRIBIS

VAISALA

USER'S GUIDE

Vaisala HUMICAP® Moisture and Temperature Transmitter for Oil MMT162

M210934EN-G

AKRIBIS · www.akribis.info · contacto@akribis.info

PUBLISHED BY

Vaisala Oyj
Street address: Vanha Nurmijärventie 21, FI-01670 Vantaa, Finland
Mailing address: P.O. Box 26, FI-00421 Helsinki, Finland
Phone: +358 9 8949 1
Fax: +358 9 8949 2227

Visit our Internet pages at www.vaisala.com

© Vaisala 2017

No part of this manual may be reproduced, published or publicly displayed in any form or by any means, electronic or mechanical (including photocopying), nor may its contents be modified, translated, adapted, sold or disclosed to a third party without prior written permission of the copyright holder. Translated manuals and translated portions of multilingual documents are based on the original English versions. In ambiguous cases, the English versions are applicable, not the translations.

The contents of this manual are subject to change without prior notice.

Local rules and regulations may vary and they shall take precedence over the information contained in this manual. Vaisala makes no representations on this manual's compliance with the local rules and regulations applicable at any given time, and hereby disclaims any and all responsibilities related thereto.

This manual does not create any legally binding obligations for Vaisala towards customers or end users. All legally binding obligations and agreements are included exclusively in the applicable supply contract or the General Conditions of Sale and General Conditions of Service of Vaisala.

Table of Contents

CHAPTER 1
GENERAL INFORMATION **5**
About This Manual **5**
Contents of This Manual 5
Version Information 6
Related Manuals 6
Documentation Conventions 6
Safety **7**
Recycling **7**
Regulatory Compliances **7**
Trademarks **8**
License Agreement **8**
Warranty **8**

CHAPTER 2
PRODUCT OVERVIEW **9**
Introduction to MMT162 ..... **9**
Basic Features and Options **10**
Transmitter Structure **11**
Typical Applications **12**
Method Used for Measuring Moisture in Oil 12
Lubrication Oil 13
Transformer Oil 13

CHAPTER 3
INSTALLATION **15**
Installing the Transmitter **15**
Weather Shield Installation Accessory 17
Wiring **17**
Connection Cables 18
Power Supply Requirements 20

CHAPTER 4
OPERATION **21**
Transmitter Start-Up **21**
Analog Output Operation Modes **21**
Normal Operation Mode and Malfunction Alarm 22
Limit Alarm 22
Serial Communication **23**
Connecting to Serial Interface 23
Installing the Driver for the USB Cable 24
Terminal Program Settings 25
List of Serial Commands **27**
Device Information and Status **28**

AKRIBIS · www.akribis.info · contacto@akribis.info

Show Device Information....28
Show Firmware Version 28
Configuring Serial Line Operation 29
Set Serial Line Settings 29
Set Serial Line Response Time....30
Set Transmitter Address....30
Format Measurement Output 31
Select Unit 33
Set Serial Interface Mode 34
Configuring Measurement Parameters 35
Select Analog Output Parameter and Scaling....35
Set Analog Output Mode (mA/V)....35
Calibrate Analog Output 36
Set Malfunction Alarm Output for Analog Channels....36
Set Alarm Limits and LED Indication for Analog Outputs....37
Set Voltage for LED Alarm 38
Extend Analog Output Range....38
Serial Line Output Commands 38
Start Measurement Output 38
Stop Measurement Output 39
Set Output Interval....39
Output Reading Once....39
Troubleshooting Commands....40
Display the Currently Active Errors 40
Test Analog Outputs....40
Other Commands....41
Opening the Transmitter in POLL Mode....41
Closing the Connection to a Transmitter in POLL Mode....41
Display Command List....42
Show User Calibration Coefficients....43
Set User Calibration Coefficients....43
Reset Transmitter 44
Restore Factory Settings 44
Modbus Communication....45
Accessing Serial Port Command Interface from Modbus Mode....45
Configuration Commands Related to Modbus 46
ppm Conversion 47
MMT162 ppm Conversion for Transformer Oils....47
Conversion Model with Average Coefficients....47
Conversion Model with Oil-specific Coefficients 48
Setting Oil Coefficients Using Serial Line....48
OIL....48
Determination of Oil-Specific Coefficients....49

CHAPTER 5
MAINTENANCE....51
Cleaning....51
Changing the Filter....52
Changing the Sensor 52
Error States 52
Unknown Serial Settings 53
Technical Support 54

AKRIBIS · www.akribis.info · contacto@akribis.info

CHAPTER 6
CALIBRATION AND ADJUSTMENT **55**
Adjustment Points **56**
Humidity Measurement 56
Temperature Measurement 56
Adjustment Procedures **57**
Calibration and Adjustment Using MM70 and a Reference Probe **57**
Calibration and Adjustment Using MM70 and a Reference Environment **59**
Relative Humidity Adjustment on Serial Line **62**
Temperature Adjustment on Serial Line **64**
Analog Output Adjustment **65**

CHAPTER 7
TECHNICAL DATA **66**
Specifications **66**
Spare Parts and Accessories **68**
Dimensions in mm (inches) **69**

APPENDIX A
MODBUS REFERENCE **71**
Default Communication Settings **71**
Supported Modbus Functions **71**
Modbus Register Map **72**
Device Identification Objects **73**

AKRIBIS · www.akribis.info · contacto@akribis.info

List of Figures

Figure 1 Moisture and Temperature Transmitter for Oil MMT162 11
Figure 2 Water Solubility of Transformer Oils versus Temperature 14
Figure 3 Removing the Transportation Protection Cap 15
Figure 4 Installing the Transmitter 16
Figure 5 Connecting the Cable 16
Figure 6 Connectors I and II 17
Figure 7 Connector Pinout 18
Figure 8 Cable with Threaded Connector 19
Figure 9 Cable with 90° Angle Threaded Connector 19
Figure 10 LED Cable 20
Figure 11 USB Serial Interface Cable 20
Figure 12 PuTTY Terminal Application 26
Figure 13 Metal Housing Transmitter Dimensions 69
Figure 14 Plastic Housing Transmitter Dimensions 70

List of Tables

Table 1 Manual Revisions 6
Table 2 Related Manuals 6
Table 3 Parameters Measured and Calculated by MMT162 9
Table 4 Default Serial Interface Settings 23
Table 5 Serial Line Commands 27
Table 6 FORM Command Modifiers 32
Table 7 Symbols Used in FORM Checksum Equations 33
Table 8 Output Modes 34
Table 9 Analog Output Modes 35
Table 10 Configuration Commands for Modbus RTU 46
Table 11 Error Messages 53
Table 12 Water Activity / Relative Saturation 66
Table 13 Temperature 66
Table 14 Operating Environment 66
Table 15 Inputs and Outputs 67
Table 16 Mechanics 67
Table 17 Default Communication Settings 71
Table 18 Supported Function Codes 71
Table 19 Modbus Register Map 72
Table 20 Device Identification Objects 73

CHAPTER 1

GENERAL INFORMATION

This chapter provides general notes for the manual and the product.

About This Manual

This manual provides information for installing, operating, and maintaining Vaisala HUMICAP® Moisture and Temperature Transmitter for Oil MMT162.

Contents of This Manual

This manual consists of the following chapters:

- Chapter 1, General Information, provides general notes for the manual and the product.
- Chapter 2, Product Overview, introduces the features, advantages, and the product nomenclature
- Chapter 3, Installation, provides you with information that is intended to help you install the product.
- Chapter 4, Operation, provides information that is needed in basic maintenance of the product.
- Chapter 5, Maintenance, provides information that is needed in basic maintenance of the product.
- Chapter 6, Calibration and Adjustment, provides information that is needed in calibration and adjustment of the product.
- Chapter 7, Technical data, provides the technical data of the product.
- Appendix A, Modbus Reference, describes the Modbus protocol implementation of the MMT162 transmitter.

AKRIBIS · www.akribis.info · contacto@akribis.info

Version Information

Table 1 Manual Revisions

Manual Code	Description
M210934EN-G	March 2017. This manual. IP class specification for probe versions with metal housing updated to IP66 (applies to probes manufactured from March 2017 onwards). Weather shield order code corrected.
M210934EN-F	June 2016. Previous version. Weather shield accessory added, manual's disclaimer text updated.
M210934EN-E	September 2015. %RS added to available quantities.

Related Manuals

Table 2 Related Manuals

Manual Code	Manual Name
M210935EN	MMT162 Quick Reference Guide
M211892EN	MMT162 Weather Shield Quick Guide

Documentation Conventions

Throughout the manual, important safety considerations are highlighted as follows:

WARNING	Warning alerts you to a serious hazard. If you do not read and follow instructions very carefully at this point, there is a risk of injury or even death.

CAUTION	Caution warns you of a potential hazard. If you do not read and follow instructions carefully at this point, the product could be damaged or important data could be lost.

NOTE	Note highlights important information on using the product.

AKRIBIS · www.akribis.info · contacto@akribis.info

Safety

The Vaisala HUMICAP® Moisture and Temperature Transmitter for Oil MMT162 delivered to you has been tested for safety and approved as shipped from the factory. Note the following precautions:

WARNING	Ground the product, and verify outdoor installation grounding periodically to minimize shock hazard.

CAUTION	Do not modify the unit. Improper modification can damage the product or lead to malfunction.

Recycling

	Recycle all applicable material.

	Dispose of batteries and the unit according to statutory regulations. Do not dispose of with regular household refuse.

Regulatory Compliances

Vaisala HUMICAP® Moisture and Temperature Transmitter for Oil MMT162 is in conformity with the following EU directive:

- EMC-Directive

Conformity is shown by compliance with the following standards:

- EN 61326-1: Electrical equipment for measurement, control and laboratory use - EMC requirements - Industrial environment.
- EN 55022 Class B: Information technology equipment – Radio disturbance characteristics – Limits and methods of measurement.

CE

AKRIBIS · www.akribis.info · contacto@akribis.info

Trademarks

HUMICAP® is a registered trademark of Vaisala Oyj.

Windows® is a registered trademark of Microsoft Corporation in the United States and/or other countries.

License Agreement

All rights to any software are held by Vaisala or third parties. The customer is allowed to use the software only to the extent that is provided by the applicable supply contract or Software License Agreement.

Warranty

Visit our Internet pages for standard warranty terms and conditions: www.vaisala.com/warranty.

Please observe that any such warranty may not be valid in case of damage due to normal wear and tear, exceptional operating conditions, negligent handling or installation, or unauthorized modifications. Please see the applicable supply contract or Conditions of Sale for details of the warranty for each product.

AKRIBIS · www.akribis.info · contacto@akribis.info

CHAPTER 2
PRODUCT OVERVIEW

This chapter introduces the features, advantages, and the product nomenclature of Moisture and Temperature Transmitter for Oil MMT162.

Introduction to MMT162

Vaisala HUMICAP® Moisture and Temperature Transmitter for Oil MMT162 provides reliable moisture measurement in wide range of applications. MMT162 is a microprocessor based instrument for the measurement of moisture in terms of water activity or relative saturation, for example in the lubrication of circulation systems or in transformer oil. With the help of internal oil solubility coefficients, MMT162 is also able to output oil moisture in ppm (supported by default only for mineral transformer oil).

Analog outputs can be chosen between current and voltage signals. Alternatively, digital output (RS-485) comes as standard. The probe incorporates a capacitive thin film sensor. The operation of the sensor is based on changes in its capacitance as the thin polymer film absorbs water molecules.

The MMT162 transmitter is available with either metal or plastic housing. The transmitter can be configured in many ways: two analog output signals can be scaled, the measurement ranges can be changed within certain limits and there are two mechanical connection options, ISO and NPT 1/2. MMT162 is supplied with a three or five meter connection cable.

MMT162 also provides for accurate temperature measurement. It is an easy-to-install on-line probe that can be calibrated against, for example, traceable salt solutions.

Table 3 Parameters Measured and Calculated by MMT162

Parameter	Abbreviation	Metric Unit	Non Metric Unit
Water activity	A_w	Aw	Aw
Relative saturation	%RS	%RS	%RS
Temperature	T	°C	°F
Mass concentration of water in oil	H_2O	ppm	ppm

NOTE The ppm output is only applicable for transformer oil.

AKRIBIS · www.akribis.info · contacto@akribis.info

Basic Features and Options

- Two analog outputs
- Digital output: RS-485 with onboard Modbus protocol
- USB connectivity for service connections via the optional USB M8 cable
- Different cable lengths available
- Available with two different thread options: ISO G1/2" and NPT 1/2"
- Low maintenance requirements due to excellent long term stability
- LED cable option that enables a visual alarm function
- Field calibration possible with MM70
- Two filter types available: stainless steel grid filter and high flow stainless steel grid filter (> 1 m/s)

Transmitter Structure

The structure of the MMT162 is shown in Figure 1 below. The transmitter body does not have user serviceable parts inside, and is not designed to be opened. Opening the transmitter will void the warranty.

When the transmitter is delivered, the filter is protected by a yellow transport protection cap. Remove the transport protection cap before installing the transmitter.

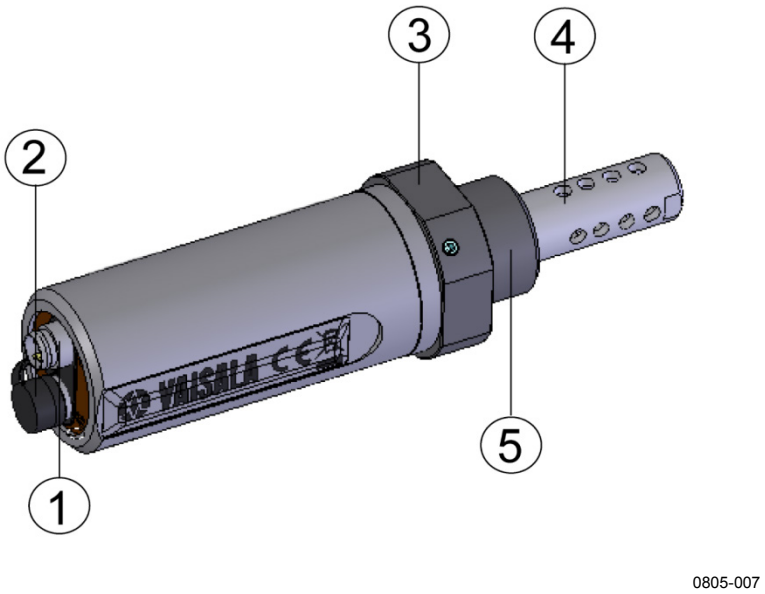

Figure 1 Moisture and Temperature Transmitter for Oil MMT162

where

1 = 4-pin M8 connector I: analog output channels and operating power
2 = 4-pin M8 connector II (shown with protective cap): digital output (RS-485) and operating power
3 = 30 mm nut
4 = HUMICAP® sensor protected with stainless steel grid filter
5 = Connection thread: ISO G1/2" or NPT 1/2"

AKRIBIS · www.akribis.info · contacto@akribis.info

Typical Applications

Method Used for Measuring Moisture in Oil

The MMT162 transmitter measures water in oil in terms of water activity (a_w) and relative saturation (%RS). With the help of internal oil solubility coefficients, MMT162 is also able to output oil moisture in ppm (supported by default only for mineral transformer oil).

Water activity indicates the amount of oil in the scale of 0 … 1 a_w. In this scale, 0 a_w is an indication of completely water free oil, and 1 a_w an indication of oil fully saturated with water (water is present in free form).

Relative saturation indicates the amount of water oil in the scale of 0 ... 100 %RS. In this scale, 0 %RS is an indication of completely water free oil and 100 %RS an indication of oil fully saturated with water (water is present in free form).

The most important feature which distinguishes the measurement of water activity (a_w) and relative saturation (%RS) from the traditional measurement of absolute water content (in ppm) is that the saturation point remains stable regardless of the oil type or the aging of oil, additives used, etc. As water activity exceeds 0.9 a_w (or relative saturation exceeds 90 %RS) in any system, there is a risk for segregation (especially if the temperature decreases).

Water activity and relative saturation are used for alarming at the point of >0.9 a_w / >90 %RS that the risk for free water in the system is obvious.

The most important advantages of this system are the fact that water activity and relative saturation are immune to the aging of oil and to additives, and that the MMT162 transmitter can be used for continuous on-line measurements. In addition, the MMT162 can be calibrated against salt solutions and no reference oils are needed.

NOTE	To avoid self-heating of the probe and consequential measurement errors, make sure there is some flow in the application process.

Lubrication Oil

In many industrial plants, like paper mills, hydro power plants and off-shore wind turbines, there is a certain amount of free moisture constantly present. This means that there is a high risk of the free moisture becoming into contact with the machine bearings. The most common reasons for the entrance of water are inadequate sealing of the housing or moisture absorption from ambient air. Accidental leakages from oil coolers and other equipment can also cause damage.

Free water in lubrication oil prevents oil from forming a uniform layer on the metal surfaces and thus deteriorating its lubrication properties. This can cause, for example, spot heating, cavitation, corrosion and micro pitting. Free water also ruins additives like AW (antiwear) and EP (extreme pressure). Note that bearings should never be exposed to oils that have high water content; this is also important during standstill because the risk for corrosion increases as the oil temperature decreases. It is essential to monitor the water content and to keep it on a suitable level, that is, below saturation.

When measuring the water content of oil, it is best to measure the water activity or relative saturation before an oil reservoir and from a pressure line flow. This way the performance of dehumidifiers can be kept under control to ensure that no free water reaches the bearings.

Transformer Oil

The determination of moisture in oil is an essential part of a comprehensive transformer maintenance program. Aging and deterioration increase the capacity of oil to absorb water. The primary interest in transformers is to measure the water not in oil but in the cellulosic insulation around the transformer windings. Heating and cooling have a considerable effect on moisture levels in oil. While temperature rises, the paper insulation of transformers tends to loose moisture which is absorbed by the oil surrounding it. Saturation level is thus a true indicator of moisture present. The MMT162 method provides for a reliable detection of the aging of oil and possible leakages.

Oil immersed transformers rely on the oil for cooling, protection from corrosion and as an important component of their insulation. Excessive moisture content in oil causes accelerated ageing of the insulation materials and reduces their dielectric strength. In extreme cases this can result in arcing and short circuits within the windings. Accurate moisture measurements can also warn about leaks in the oil system, as water is absorbed from the surrounding air.

AKRIBIS · www.akribis.info · contacto@akribis.info

Heating and cooling of a transformer affect moisture levels in oil. This is due to the fact that the water solubility of oil is temperature dependent. In general, water solubility increases as temperature rises; see Figure 2 on page 14. Changes in temperature also have an effect on water desorption of the paper insulation around the transformer windings. Desorption of water from the insulation increases as temperature rises and the surrounded oil absorbs desorbed water. Moisture level in oil is thus a true indicator of moisture present in the paper insulation.

In addition, it must be noted that capacity of oil to absorb water depends both on the chemical structure of the oil and the additives.

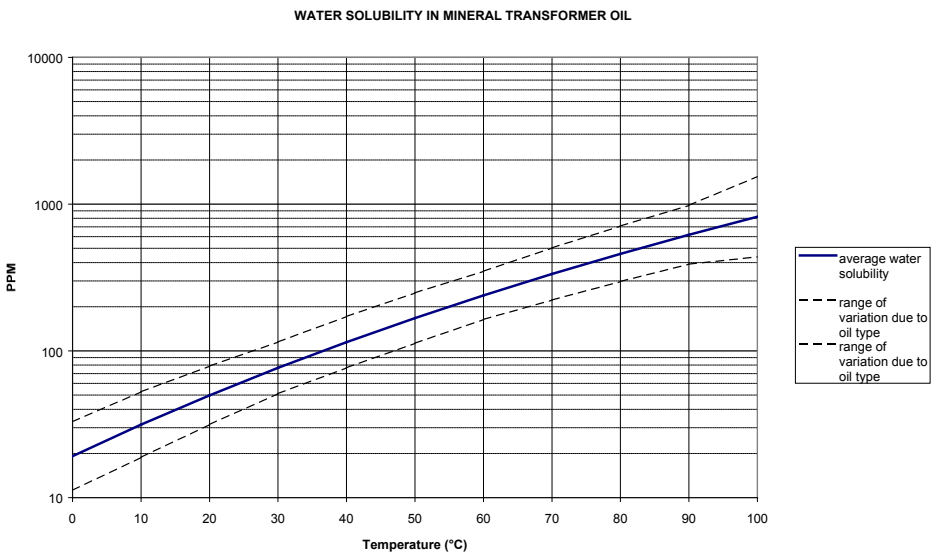

0510-029

Figure 2 Water Solubility of Transformer Oils versus Temperature

The margins show the range of variation of water solubility found in mineral oils.

AKRIBIS · www.akribis.info · contacto@akribis.info

CHAPTER 3
INSTALLATION

This chapter provides you with information that is intended to help you install the product.

Installing the Transmitter

After selecting a suitable measurement location, follow the procedure below to install the transmitter:

1. Remove the yellow transport protection cap from the transmitter.

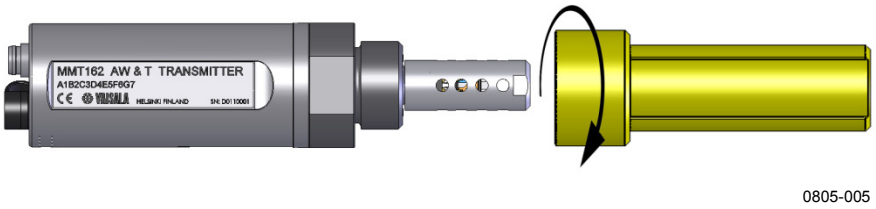

Figure 3 Removing the Transportation Protection Cap

2. Prepare the sealing of the connection:
   - If the transmitter has a parallel ISO G1/2" thread, place the sealing ring at the base of the thread. Always use a new sealing ring; do not re-use a previously installed one.
   - If the transmitter has an NPT 1/2" thread, do not use the sealing ring. Instead, apply PTFE tape or suitable paste sealant to the thread. Follow the application instructions of the sealant.
3. Make sure that the threads on the mounting point are of the correct type, and fasten the transmitter to the measurement point. Use your hands to turn the probe until it feels tight. Do not use force at this point, and check that the sealing ring (if used) remains centered.

AKRIBIS · www.akribis.info · contacto@akribis.info

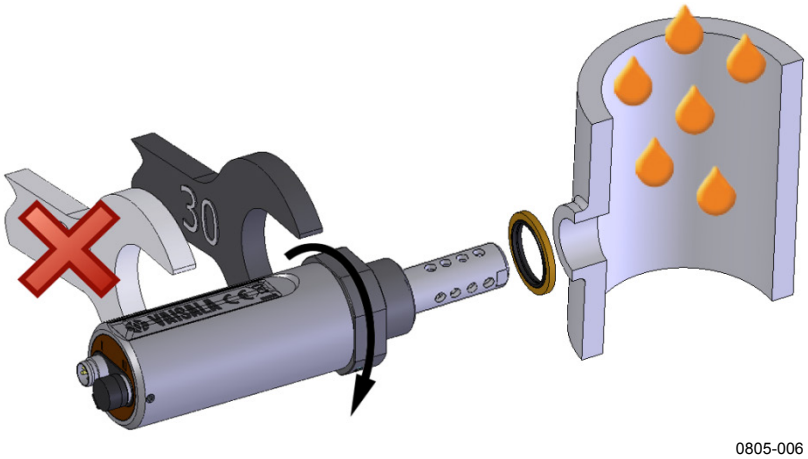

Figure 4 Installing the Transmitter

4. Use a 30 mm wrench to tighten the connection to 25 Nm, as shown in Figure 4 above. If you do not have a 30 mm wrench, use a 1 3/16” wrench or an adjustable wrench instead.

CAUTION	Only tighten the probe from the 30 mm nut. Do NOT apply force to other points of the probe body.

5. Connect the wires of the connection cable.

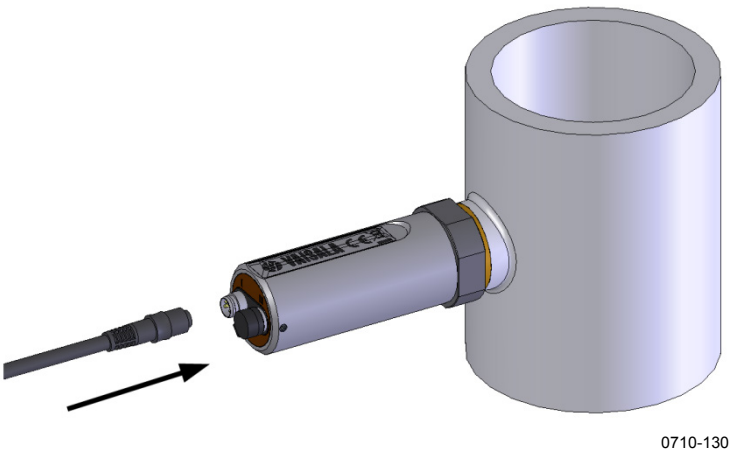

Figure 5 Connecting the Cable

6. Plug in the cable to the transmitter. Be sure to use the correct connector; refer to section Wiring on page 17.

7. Cover the unused connector on the transmitter with the rubber plug that is attached to the transmitter.

Weather Shield Installation Accessory

If the conditions in the transmitter's installation location demand additional protection from, for example, rain or spray, you can protect the transmitter with the optional metal weather shield accessory (Vaisala order code ASM245628SP). For more information on ordering spare parts and accessories, see Spare Parts and Accessories on page 68.

Wiring

Pin	I	II	Wire Color
1	Vcc	Vcc	Brown
2	Analog output 1	RS-485 B / D-	White
3	GND	GND	Blue
4	Analog output 2 / LED	RS-485 A / D+	Black

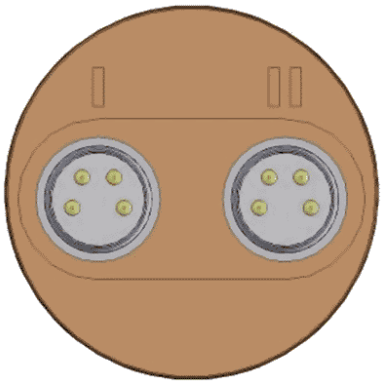

Figure 6 Connectors I and II

AKRIBIS · www.akribis.info · contacto@akribis.info

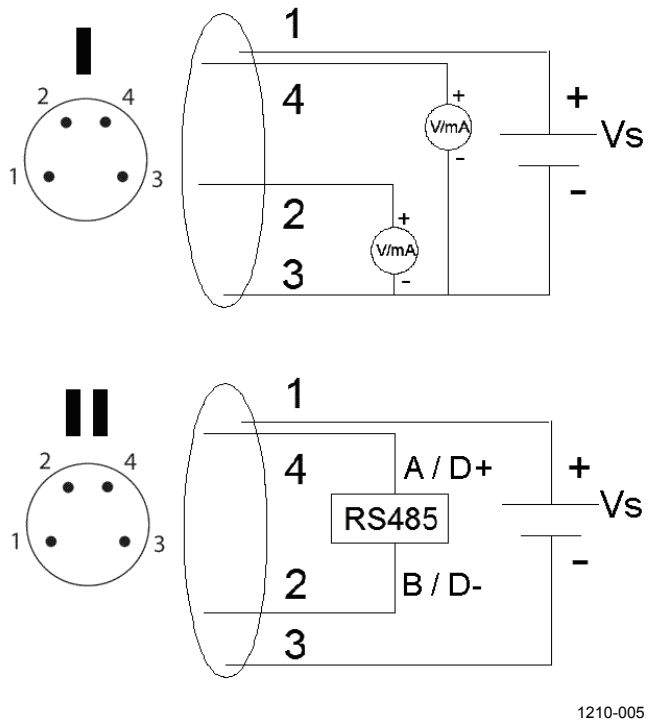

Figure 7 Connector Pinout

Connection Cables

The following connection cable options are available for MMT162:

- Shielded cables with M8 female straight threaded connector
- Cables with M8 female 90° angle threaded connector
- LED cable
- USB serial interface cable

The figures below show the different cable options that are available. For order codes, see section Spare Parts and Accessories on page 68.

1210-063

Figure 8 Cable with Threaded Connector

1211-024

Figure 9 Cable with 90° Angle Threaded Connector

AKRIBIS · www.akribis.info · contacto@akribis.info

1211-025

Figure 10 LED Cable

1210-062

Figure 11 USB Serial Interface Cable

Power Supply Requirements

The MMT162 transmitters are designed to operate with a supply voltage of 14 … 24 VDC.

The power supply should maintain the voltage for all load conditions. Current consumption during normal measurement is 20 mA + load current. For more specific information, see chapter Technical data on page 66.

CHAPTER 4

OPERATION

This chapter contains information that is needed to operate this product.

Transmitter Start-Up

When the transmitter is connected to power supply, there is a delay of five seconds as the transmitter starts up. After the start-up is complete, the measurement data is available from the analog outputs or serial line.

If serial line output is used, note that the transmitter will behave according to the configured serial mode:

- In STOP mode, the transmitter outputs the transmitter model and software version. This is the default mode.
- In RUN mode, a measurement output starts immediately.
- In POLL mode, the transmitter does not output anything after power-up.
- In MODBUS mode, the transmitter does not output anything after power-up.

For a description of the serial modes, see section Set Serial Interface Mode on page 34.

Analog Output Operation Modes

The MMT162 has two analog output channels. These channels can function in two different modes, which can be set individually for both channels:

1. Normal operation mode
2. Limit alarm mode

When the transmitter is ordered from Vaisala, the modes are configured as specified in the order form. You can change the operation settings after delivery by using serial commands and the USB cable accessory.

AKRIBIS · www.akribis.info · contacto@akribis.info

Normal Operation Mode and Malfunction Alarm

In the normal operation mode, a channel outputs voltage or current that corresponds to the reading of the selected parameter.

If the transmitter is malfunctioning, the channel output is set to a pre-defined level. This level can be changed using the **AERR** command; see page 36.

NOTE	The malfunction alarm overrides the limit alarm mode. If the transmitter is malfunctioning, the analog outputs are set to the levels specified with the **AERR** command, unless the malfunction prevents the outputs from being controlled.

Limit Alarm

The limit alarm is activated when the measured parameter goes below the low limit, or above the high limit. The alarm levels and limits are configurable using the **ALARM** command (see Set Alarm Limits and LED Indication for Analog Outputs on page 37). By default, the alarm levels are set as follows:

- For **current output**, an active alarm is indicated by the current being at the maximum of the scale (20 mA).
- For **voltage output**, an active alarm is indicated by the voltage being at the maximum of the selected scale. For example, if the voltage output scale is 0 … 5 V, an output of 5 V indicates the alarm is active.
- For **LED alarm,** an active alarm is indicated by a lit LED. When the alarm status is low, the LED is not lit. If the transmitter is malfunctioning or it cannot measure for some reason, this causes the LED to blink at 0.5 Hz frequency.

LED alarm indicator is integrated to a LED cable (Vaisala item MP300LEDCBL) that can be ordered and used instead of a regular connection cable.

AKRIBIS · www.akribis.info · contacto@akribis.info

Serial Communication

Connecting to Serial Interface

The MMT162 can be connected to a PC using the RS-485 line, for example using the USB serial connection cable (Vaisala item 219690). The cable also provides operation power to the transmitter from the USB port. It is OK to connect the USB serial connection cable even if the transmitter is already supplied with operation power from another cable.

To connect to serial interface:

1. If you have not used the MMT162 USB serial connection cable before, install the driver that came with the cable. Refer to section Installing the Driver for the USB Cable on page 24 for detailed instructions.
2. Connect the USB serial connection cable between your PC and the RS-485 port of the MMT162 (port II).
3. Open the terminal program (for example, PuTTY for Microsoft Windows®, available from http://www.vaisala.com/software).
4. Set the serial settings of the terminal program, and open the connection. See the following table.

Table 4 Default Serial Interface Settings

Property	Description / Value
Baud rate	19200
Parity	none
Data bits	8
Stop bits	1

If the MMT162 is in Modbus mode, to access the serial port command interface, follow the procedure in Accessing Serial Port Command Interface from Modbus Mode on page 45.

AKRIBIS · www.akribis.info · contacto@akribis.info

Installing the Driver for the USB Cable

Before taking the USB cable into use, you must install the provided USB driver on your PC.

1. Check that the USB cable is not connected. Disconnect the cable if you have already connected it.
2. Insert the media that came with the cable, or download the driver from http://www.vaisala.com/software.
3. Execute the USB driver installation program and accept the installation defaults. The installation of the driver may take several minutes.
4. After the driver has been installed, connect the USB cable to a USB port on your PC. Windows will detect the new device, and use the driver automatically.
5. The installation has reserved a COM port for the cable. Verify the port number, and the status of the cable, using the **Vaisala USB Instrument Finder** program that has been installed in the Windows Start menu.

Windows will recognize each individual cable as a different device, and reserve a new COM port. Remember to use the correct port in the settings of your terminal program.

AKRIBIS · www.akribis.info · contacto@akribis.info

Terminal Program Settings

The default settings of the MMT162 serial interface are presented in Table 4 on page 23. If the settings of your MMT162 have been changed and you do not know what they are, refer to section Unknown Serial Settings on page 53.

The steps below describe how to connect to the MMT162 using the PuTTY terminal application for Windows (available for download at http://www.vaisala.com/software) and a USB serial interface cable:

1. Connect the USB serial interface cable between your PC and the RS-485 port of the MMT162 (port II).
2. Start the PuTTY application.
3. Select the **Serial** settings category, and check that the correct COM port is selected in the **Serial line to connect to** field.

   Note: You can check which port the USB cable is using with the **Vaisala USB Instrument Finder program** that has been installed in the Windows Start menu.
4. Check that the other serial settings are correct for your connection, and change if necessary. **Flow control** should be set to **None** unless you have a reason to change it.
5. Click the **Open** button to open the connection window and start using the serial line.

   Note: If PuTTY is unable to open the serial port you selected, it will show you an error message instead. If this happens, restart PuTTY and check the settings.
6. You may need to set the **Local echo** setting to **Force on** in the **Terminal** category to see what you are typing on the serial line. To access the configuration screen while a session is running, click the right mouse button over the session window, and select **Change Settings...** from the pop-up menu.

If the MMT162 is in Modbus mode, to access the serial port command interface, follow the procedure in Accessing Serial Port Command Interface from Modbus Mode on page 45.

AKRIBIS · www.akribis.info · contacto@akribis.info

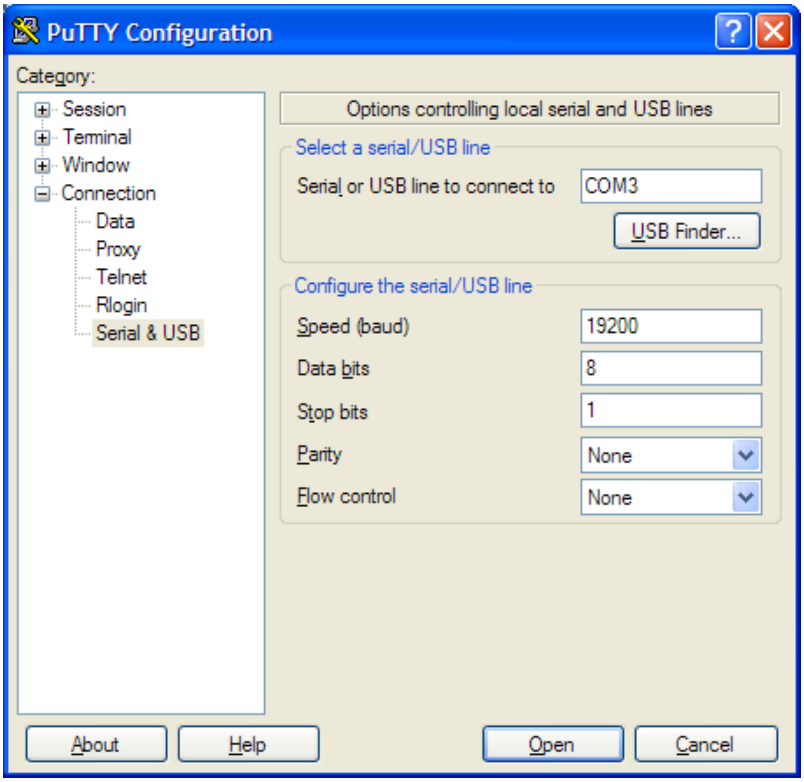

0807-004

Figure 12 PuTTY Terminal Application

List of Serial Commands

All commands can be issued either in uppercase or lowercase. In the command examples, the keyboard input by the user is in **bold** type.

The notation <cr> refers to pressing the carriage return (**Enter**) key on your computer keyboard. Enter a <cr> to clear the command buffer before starting to enter commands.

Table 5 Serial Line Commands

Command	Description
?	Output information about the device
??	Output information about the device in POLL mode
ACAL	Analog output calibration
ADDR **[0** ... 255]	Set the transmitter address (for POLL mode)
AERR	Change the analog error output values
ALARM	Set analog output limit alarm modes
AMODE	Set analog output modes
AOVER [ON/OFF]	Allow analog outputs to exceed their range 10%
ASEL	Select the parameters for the analog outputs
ATEST	Set and display current output values
CLOSE	Close the temporary connection (Back to POLL mode)
CRH	Relative humidity calibration
CT	Temperature calibration
ERRS	List present transmitter errors
FORM	Set the output format of SEND and R commands
FRESTORE	Restore factory settings
HELP	List the most common commands
INTV [**0** ... 255 **S**/MIN/H]	Set the continuous output interval (for RUN mode)
L	Show user calibration coefficients
LED	Set voltage for LED alarm
OIL	Display oil parameters
OILI	Set new oil parameters
OPEN **[0** ... 255]	Open a temporary connection to a POLL mode device
R	Start the continuous outputting
RESET	Reset the transmitter
S	Stop the continuous outputting
SDELAY	View or set user port (RS-485) answer minimum delay
SEND [0 ... 255]	Output the reading once
SERI [baud p d s]	User Port settings (Default: 4800 E 7 1) baud: 300 ... 115200
SMODE [**STOP**/RUN/POLL/MODBUS]	Set the serial interface mode
UNIT [M/N]	Select the metric or non-metric output units
VERS	Display the software version information

AKRIBIS · www.akribis.info · contacto@akribis.info

Device Information and Status

Show Device Information

The **?** command outputs a listing of device information. If you wish to display the listing for all devices on the current serial line, issue the command **??**.

?<cr>

??<cr>

Example:

```
?
MMT162 0.92
Serial number  : G0000002
Batch number   : D0720012
Module number  : ????????
Sensor number  : C6010000
Sensor model   : Humicap L2
Cal. date      : YYYYMMDD
Cal. info      : NONE
Time           : 00:21:19
Serial mode    :     STOP
Baud P D S     :     4800 E 7 1
Output interval:        2 S
Serial delay   :        0
Address        :        0
Pressure       :   1.0132 bar
Filter         :    0.800
Ch1 output     : 0 ... 20 mA
Ch2 output     : 0 ... 20 mA
Ch0 error out  :    0.000 mA
Ch1 error out  :    0.000 mA
Ch0 aw   lo    :     0.00
Ch0 aw   hi    :     1.00
Ch1 T    lo    :   -20.00 'C
Ch1 T    hi    :    80.00 'C
```

Show Firmware Version

Use the **VERS** command to display software version information.

Example:

```
vers
MMT162 1.02
```

Configuring Serial Line Operation

Set Serial Line Settings

Use the serial line command **SERI** [*b p d s*] to set communication settings for the user port.

Bit rates less than 9600 b/s are not supported with Modbus.

SERI [*b p d s*]<cr>

where

b	=	Bit rate (110, 150, 300, 600, 1200, 2400, 4800, 9600,19200, 38400)
p	=	Parity (n = none, e = even, o = odd)
d	=	Data bits (7 or 8)
s	=	Stop bits (1 or 2)

Example:

```
seri 600 n 8 1
600 N 8 1
```

You need to reset the transmitter to activate the new communication settings set with the **SERI** command.

The settings can be changed one parameter at a time or all parameters at once:

```
seri o
4800 O 7 1
```

changing parity only

```
seri 600 n 8 1
600 N 8 1
```

changing all parameters

You can use the **SERI** command to change/view the user port settings even if you are currently connected to the service port.

AKRIBIS · www.akribis.info · contacto@akribis.info

Set Serial Line Response Time

With the **SDELAY** command you can set delay (response time) of the serial line, or view the currently set delay value.

SDELAY [*delay*]<cr>

where

delay = Serial line delay, range 0 ... 255. Multiply the value by four to get milliseconds (for example, delay value of 10 equals 40 millisecond delay).

Example:

```
sdelay
Serial delay   : 0 ? 10

sdelay
Serial delay   : 10 ?
```

Set Transmitter Address

Addresses are required only for POLL mode (see Set Serial Interface Mode on page 34). Use the **ADDR** command to input the RS-485 transmitter address.

ADDR [*aaa*]<cr>

where

aaa = address (0 ... 255) (default = 0)

Example (configure transmitter to address 99):

```
addr
Address : 2 ?  99
```

Format Measurement Output

Use the serial line command **FORM** to change the format or select certain parameters for the output commands **SEND** and **R**.

FORM [*x*]<cr>

where

x = Formatter string

Formatter string consists of parameters and modifiers. The MMT162 measures the following parameters:

- water activity (a_w)
- relative saturation (%RS)
- temperature (T) (metric unit: ºC, non metric unit:ºF)
- ppm (H_2O) - for transformer oil only

When selecting the parameter, use its abbreviation (for example, aw). The modifiers are presented in Table 6 on page 32.

Example (configure transmitter to output water activity and temperature):

```
form "aw=" 6.4 aw #t "t=" 6.2 t #r#n
OK
send
aw=     0.2644   t=    25.50
```

Example (configure transmitter to output ppm only):

```
form "Oil ppm= " h2o " " u3 #r#n
OK
send
Oil ppm=    16.6 ppm
```

Example (configure transmitter to default output format):

```
form /
OK
send
aw=   0.087 T= 24.0 'C
```


AKRIBIS · www.akribis.info · contacto@akribis.info

Table 6 FORM Command Modifiers

Modifier	Description
/	Restores the default output message (depends on the device configuration). Used alone.
x.y	Length modifier (number of digits and decimal places).
parameter	Abbreviation of a measured parameter, for example aw. Outputs the measured value of the parameter, or * characters if measured value is not available.
U1…U7	Unit symbol in the specified number of characters (truncated or space filled as necessary).
“xxx”	String constant (free text).
#a \a	Audible bell character <07h>.
#b \b	Backspace character <08h>
#f \f	Form feed character <0Ch>.
#n \n	Line feed character <0Ah>.
#r \r	Carriage return character <0Dh>.
#t \t	Horizontal tabulator character <09h>.
#v \v	Vertical tabulator character <0Bh>.
#\ \\	Backslash character.
#0…#255 \0…\255	Data byte with the specified decimal value.
ADDR	Device address (left-filled with spaces).
CS2	Modulus-256 checksum of message sent so far, hexadecimal format.
CS4	Modulus-65536 checksum of message sent so far, hexadecimal format.
CSX	NMEA XOR checksum of message sent so far, hexadecimal format
ERR	Currently active transmitter errors in a four bit field. 0 = no error, 1 = error. bit1 = Temperature measurement (T meas error) bit2 = Not used bit3 = Humidity measurement (F meas error) bit4 = Internal error (Program flash check sum error)
SN	Device serial number.
TIME	Time since transmitter startup in format *hh:mm:ss*.

Checksums are calculated as described in the equations below.

1 = $$cs_2 = \sum_{i=1}^{n} b_i \bmod 256$$

2 = $$cs_4 = \sum_{i=1}^{n} b_i \bmod 65536$$

3 = $$cs_x = b'_1 \oplus b'_2 \oplus \ldots \oplus b'_n$$

$$b'_i = b_i \;\; if\; b_i \neq 36\, and\, b_i \neq 42$$

$$b'_i = 0 \;\; if\; b_i = 36\, or\, b_i = 42$$

Table 7 Symbols Used in FORM Checksum Equations

Symbol	Description
cs_2	Value of CS2 checksum in the output message.
cs_4	Value of CS4 checksum in the output message.
cs_x	Value of CSX checksum in the output message.
b_i	Value of the byte at position *i* (1-based) in the output message.
n	Number of bytes in the output message before the CS2, CS4, or CSX field (including earlier checksum fields, if any).
$\oplus$	Bit-wise exclusive-or operator.
36	Byte value of ASCII `$` character.
42	Byte value of ASCII `*` character.

Select Unit

Use the **UNIT** command to select metric or non-metric output units.

UNIT [*x*]<cr>

where

x = M or N

where

M = Metric units
N = Non-metric units

AKRIBIS · www.akribis.info · contacto@akribis.info

Set Serial Interface Mode

Use the **SMODE** command to set the default serial interface mode.

SMODE [*xxxx*]<cr>

where

xxxx = STOP, RUN or POLL

Table 8 Output Modes

Mode	Measurement Output	Available Commands
STOP	Only with the **SEND** command.	All (default mode).
RUN	Automatic output.	Only command **S.**
POLL	Only with the **SEND** [*addr*] command.	**SEND** [*addr*] and **OPEN** [*addr*]. Other commands available after opening a line to the transmitter using the **OPEN** command. Use with RS-485 buses where multiple transmitters can share the same line.
MODBUS	Must be read from the transmitter using Modbus protocol.	Modbus protocol only; see Appendix A, Modbus Reference on page 71.

When several transmitters are connected to the same line, each transmitter must be entered an own address in the initial configuration, and POLL mode must be used.

If the Modbus mode is activated, serial port commands cannot be used with the device. To access the serial port command interface, follow the procedure in Accessing Serial Port Command Interface from Modbus Mode on page 45.

AKRIBIS · www.akribis.info · contacto@akribis.info

Configuring Measurement Parameters

Select Analog Output Parameter and Scaling

Select and scale the parameters for the analog outputs with the **ASEL** command. Note that the optional parameters can be selected only if they have been selected when ordering the device.

ASEL [*xxx yyy*]<cr>

where

xxx = Parameter of channel 1
yyy = Parameter of channel 2

Always enter all the parameters for all outputs. The MMT162 measures the following parameters:

- water activity (a_w)
- relative saturation (%RS)
- temperature (T) (metric unit: ºC, non-metric unit: ºF)
- ppm (H_2O) - for transformer oil only

Example:

```
asel
Ch0 aw   lo    :     0.00  ?
Ch0 aw   hi    :     1.00  ?
Ch1 T    lo    :   -20.00 'C ?
Ch1 T    hi    :    80.00 'C ?
```

Set Analog Output Mode (mA/V)

The **AMODE** command can be used to change the analog output mode of channels 1 and 2. When used without parameters it displays the current settings and with parameters new settings can be set. The available parameters are listed in Table 9 below.

Table 9 Analog Output Modes

Parameter	Output mode
1	0 … 20 mA
2	4 … 20 mA
4	0 … 5 V
5	0 … 10 V
6	LED alarm
7	Current alarm
8	Voltage alarm

AKRIBIS · www.akribis.info · contacto@akribis.info

Example:

```
amode 1 2
Ch1 output     : 0 ... 20 mA
Ch2 output     : 4 ... 20 mA
```

Calibrate Analog Output

Use the **ACAL** command to adjust analog output channels.

ACAL [*channel*]<cr>

where

channel = Analog output channel to be adjusted, 1 or 2.

After entering the **ACAL** command, use a calibrated current/voltage meter to measure the output, and enter the values.

Example:

```
acal 1
Ch1    U1 ( V  ) ? 1.001
Ch1    U2 ( V  ) ? 9.011
acal 2
Ch2    U1 ( V  ) ? 0.0988
Ch2    U2 ( V  ) ? 0.8997
```

Set Malfunction Alarm Output for Analog Channels

Use the **AERR** command to set the analog output levels that are output in case of a device malfunction. The default output level is 0.

AERR<cr>

Example:

```
aerr
Ch1 error out  : 10.000V ? 0
Ch2 error out  : 1.000V ? 0
```

NOTE	The error output value must be within a valid range of the output mode.

NOTE	The error output value is displayed only when there are minor electrical faults such as a humidity sensor damage. When there is a severe device malfunction, the error output value is not necessarily shown.

Set Alarm Limits and LED Indication for Analog Outputs

Use the **ALARM** command to set the analog output alarm limits and parameters. For an explanation of the alarm limits, see section Limit Alarm on page 22.

ALARM<cr>

Before setting the alarm limits, verify the currently set analog output modes using the **AMODE** command.

The following example shows that a high limit alarm has been enabled for channel 2. If the measured value rises above the limit (0.90 a_w), an error is reported. If you are using a LED cable, the LED lights up to indicate an error state.

Example:

```
alarm ?
Channel 1:
Low Limit       :      OFF
High Limit      :      OFF
Aerr            :       ON
Quantity        :        T
Limit Lo        :    15.00
Limit Hi        :    30.00
Hysteresis      :     0.50
Level Lo        :     0.20
Level Hi        :     0.80
Channel 2:
Low Limit       :      OFF
High Limit      :       ON
Aerr            :      OFF
Quantity        :       aw
Limit Lo        :     0.10
Limit Hi        :     0.90
Hysteresis      :     0.01
Level Lo        :     0.20
Level Hi        :     0.80
```


AKRIBIS · www.akribis.info · contacto@akribis.info

Set Voltage for LED Alarm

With the **LED** command, you can set a different voltage level for each channel.

LED<cr>

Example:

```
led ?
Ch 1 Led Voltage    :     2.80 V
Ch 2 Led Voltage    :     2.80 V
```

Extend Analog Output Range

Use the **AOVER** command to allow the analog output channels to exceed their specified range by 10 %. The scaling of the parameter remains as before; the extra range is used for additional measurement range in the wet end.

AOVER [*ON/OFF*]<cr>

Example:

```
aover on
           : ON
```

Serial Line Output Commands

Start Measurement Output

Use the **R** command to start the continuous outputting of measurement values as an ASCII text string to the serial line. The format of the measurement message is set with the **FORM** command.

R<cr>

Example:

```
r
aw=   0.261 T= 23.8 'C H2O=    15 ppm
```

You can change the format of the output with the following commands:

- Outputting interval can be changed with the **INTV** command.
- Output message format can be changed with the **FORM** command**.**

Stop Measurement Output

Use the **S** command to end the RUN mode. After this command all other commands can be used. You can also press the **Esc** button or reset the transmitter to stop the outputting.

S<cr>

Since the interface is half-duplex, you must enter the command when the transmitter is not outputting. Give the command again if the transmitter continues to output measurement messages.

See **SMODE** command on page 34 to change the default (power-up) operation mode.

Set Output Interval

Use the **INTV** command to set or display the output interval.

INTV [*n xxx*]<cr>

where

n	=	time interval = 0 ... 255
xxx	=	time unit = "S", "MIN", or "H"

Example:

```
intv 1 min
Output interval:    1 MIN
```

The shortest output interval (with n = 0) is approximately one second due to the internal measurement cycle.

Output Reading Once

Use the **SEND** command to output the reading once in STOP mode.

The output format depends on which parameters the transmitter can output.

SEND [*aaa*]<cr>

where

aaa	=	Transmitter address (0 ... 255). Must be specified if the transmitter is in POLL mode, and a line has not been opened using the **OPEN** command.

AKRIBIS · www.akribis.info · contacto@akribis.info

Example (showing all reading output options, actual output depends on the quantities selected for the transmitter when ordering):

```
send
T= 25.2 'C aw=   0.299 H2O=    19 ppm  RS= 29.9 %
```

Troubleshooting Commands

Display the Currently Active Errors

Use the **ERRS** command to display the currently active transmitter error states. Possible errors and their causes are listed in Table 11 on page 53.

ERRS<cr>

Example:

```
errs
No errors
```

Test Analog Outputs

The operation of the analog outputs can be tested with the **ATEST** command by forcing the output to a given value which can then be measured with calibrated multimeter. The command uses the currently selected analog output types for the channels (voltage or current) so you do not have to specify the unit.

Before testing, you can verify the currently set analog output modes using the **AMODE** command. After testing the output, give the **ATEST** command again to exit the test mode.

ATEST [*xxx yyy*]<cr>

where

xxx	=	Channel 1 output value (V or mA)
yyy	=	Channel 2 output value (V or mA)

The output shows the test values of the analog channels, and diagnostic information that may be useful to Vaisala Service if there is a problem with the analog outputs.

Example:

```
atest 1 15
    1.00     2660
   15.00    19425
atest
    0.00       79
```


AKRIBIS · www.akribis.info · contacto@akribis.info

```
0.00    20110
```

Other Commands

Opening the Transmitter in POLL Mode

Use the **OPEN** command to connect to a transmitter that is in POLL mode.

OPEN [*aaa*]<cr>

where

aaa = address (0 ... 255)

Example:

```
open 0
MMT162   0 line opened for operator commands
```

Closing the Connection to a Transmitter in POLL Mode

The **CLOSE** command closes the connection to the transmitter.

CLOSE<cr>

Example:

```
close
line closed
```


AKRIBIS · www.akribis.info · contacto@akribis.info

Display Command List

Use the **HELP** command to list the available commands.

HELP<cr>

Example:

```
help

?
ACAL
ADDR
ADJD
AERR
ALARM
AMODE
AOVER
ASEL
ATEST
CDATE
CLOSE
CRH
CT
CTEXT
ERRS
FILT
FORM
FRESTORE
HELP
INTV
L
LED
OIL
OILI
OPEN
PCOMP
PRES
R
RESET
SDELAY
SEND
SERI
SMODE
UNIT
```

Show User Calibration Coefficients

Use the **L** command to view the current user calibration coefficients on the serial line. This command is useful for checking if non-factory adjustments have been applied for humidity and temperature measurement.

L<cr>

The output values are as follows:

- RH offset and gain: corrections to RH measurement. These values change when you calibrate and adjust the humidity measurement.
- T offset and gain: corrections to T measurement. These values change when you calibrate and adjust the temperature measurement.

For more information on how the adjustments affect these coefficients, see section Adjustment Points on page 56.

Example (shows default values, no user adjustment done):

```
l
RH offset :   0.00000000E+00
RH gain   :   1.00000000E+00
T  offset :   0.00000000E+00
T  gain   :   1.00000000E+00
```

Set User Calibration Coefficients

Use the **LI** command to enter values for offset and gain coefficients for on the serial line. Useful for restoring the factory defaults, or some earlier state of user adjustment.

CAUTION	Use this command only to restore values you have previously written down based on the output from the **L** command, or to restore the default offset and gain.

LI<cr>

After you enter the command, you will be prompted to enter new values for the coefficients. The default offset is zero (0), default gain is one (1).

Example (shows user adjusted offset values, overwrites them with 0):

```
li
RH offset :  -4.35084105E-04  ? 0
RH gain   :   1.00000000E+00  ?
T  offset :  -1.62982941E-02  ? 0
T  gain   :   1.00000000E+00  ?
```


AKRIBIS · www.akribis.info · contacto@akribis.info

Reset Transmitter

When the **RESET** command is given, the transmitter will restart as if it had just been powered on. All transmitter settings are retained. The serial line mode of the transmitter will be set to the mode that was set using the **SMODE** command.

RESET<cr>

Restore Factory Settings

Use the **FRESTORE** command to restore the factory settings to the transmitter. All user settings will be lost.

FRESTORE<cr>

Modbus Communication

The Modbus variant used in MMT162 communication is Modbus RTU. Below is an example of a request to read the currently measured temperature value from transmitter with address 240, and the response from the transmitter.

Request to read registers 3 and 4 (currently measured value of T):

F0h	03h	00h	02h	00h	02h	70h	EAh
transmitter address	function code	address of first register		number of registers to read		CRC check	

Response as IEEE 754-2008 binary32 (41BBA77Ch = 23.4568 °C):

F0h	03h	04h	A7h	7Ch	41h	BBh	88h	73h
transmitter address	function code	number of data bytes to follow	data from first register		data from second register		CRC check	

For a list of available Modbus registers, see Appendix A Modbus Reference on page 71.

Accessing Serial Port Command Interface from Modbus Mode

You cannot change configuration settings (other than Modbus address) while the device is in the Modbus mode. To use the configuration commands on a Modbus-enabled device:

1. Connect the USB service cable to the PC and install the driver, if necessary.
2. Open the terminal program and open a connection to the corresponding COM port using settings 19200, 8, N, 1, no flow control.
3. Plug the service cable to the connector II of the instrument.
4. In less than three seconds, send a hash character (#) and carriage return (Enter) to the device using the terminal program. The device is now ready for configuration commands. The Modbus mode is restored on next power-up unless Modbus is disabled with command **SMODE**.

For example, if you want to deactivate the Modbus mode on a MMT162 device, follow the procedure above and deactivate the Modbus mode with command **SMODE STOP**. On subsequent power-ups, the serial command interface will be activated.

AKRIBIS · www.akribis.info · contacto@akribis.info

Configuration Commands Related to Modbus

In addition to enabling the Modbus protocol in the device, Modbus over RS-485 needs the following software settings: serial bit rate, parity, number of stop bits, and Modbus device address.Use the service commands listed in Table 10 below to configure the Modbus RTU using the USB service cable.

Table 10 Configuration Commands for Modbus RTU

Service Command	Description
SMODE MODBUS	Enable Modbus communication protocol
SERI b p 8 s	Change baud rate and parity b = baud rate (9600, 19200, 38400, 57600, 115200) p = parity (E, N, or O) 8 = number of data bits must be 8 s = number of stop bits (2 if parity is N, 1 otherwise*) Bit rates less than 9600 b/s are not supported with Modbus.
ADDR a	Set Modbus address a = new address (0…255)**
SDELAY d	Add extra Modbus response delay*** d = new delay in units of 1/250 seconds (0…255)

* Modbus specification defines that two stop bits must be used if parity is N.
** Setting address to zero switches the instrument offline from the Modbus bus. Addresses 248 … 255 are not supported by the Modbus standard but MMT162 works with them.
*** Extra response delay can be used, for example, to avoid problems caused by direction-switching delays in bus converters.

NOTE The instrument must be switched off and on before the configuration changes made with the service cable take effect.

AKRIBIS · www.akribis.info · contacto@akribis.info

ppm Conversion

MMT162 ppm Conversion for Transformer Oils

Traditionally, moisture in transformer oil is measured by using ppm units. The ppm output shows the average *mass concentration of water* in oil.

MMT162 has an option for ppm output provided that this has been notified when placing the order for the transmitter. Vaisala has this conversion readily available for mineral transformer oils.

Conversion Model with Average Coefficients

The conversion model of the MMT162 is based on the average water solubility behaviour of transformer oils. The ppm output is calculated as follows:

$$\mathbf{ppm = aw \times 10^{(A/(T+273.16)+B)}}$$

where

aw = water activity
A,B = coefficients (average/oil-specific)
T = temperature (ºC)

Generally, measurements with MMT162 give accuracy better than 10 % of the reading. If additional accuracy is needed, see Conversion Model with Oil-specific Coefficients on page 48.

NOTE

The internal calculation in ppm conversion uses a_w also when only %RS output is selected when ordering MMT162.

To convert %RS to a_w, divide the %RS quantity by 100:
$a_w = (\%RS / 100)$

AKRIBIS · www.akribis.info · contacto@akribis.info

Conversion Model with Oil-specific Coefficients

For additional accuracy, oil-specific conversion model can be used both for mineral and silicon based oils. An oil sample has to be sent to Vaisala for modelling. As a result, the specific coefficients (A and B) for the transformer oil are determined by Vaisala. For additional information, please contact Vaisala.

The determined coefficients of the transformer oil can be programmed to MMT162 by Vaisala or by a user according to the instructions presented in this chapter.

NOTE	Conversion model with oil-specific coefficients is always needed for **silicone based oils.**

Setting Oil Coefficients Using Serial Line

If the ppm conversion and oil-specific coefficients have been programmed at Vaisala, you do not have to set the conversion co-efficients.

If you have defined the coefficients or separately received from Vaisala the oil-specific coefficients A and B, related to your own oil type, the coefficients can be set to the software of MMT162 by using serial line.

OIL

Use the serial line command **OIL** to display oil-specific parameters for ppm conversion. With **OILI** command you can set new oil parameters.

Example:

```
oil
Oil[0]    :  -1.66269994E+03
Oil[1]    :   7.36940002E+00
Oil[2]    :   0.00000000E+00
```

where

Oil [0] corresponds to parameter A
Oil [1] corresponds to parameter B
Oil [2] Corresponds to parameter C

AKRIBIS · www.akribis.info · contacto@akribis.info

Determination of Oil-Specific Coefficients

The equation of the ppm calculation is:

$$\mathbf{ppm = aw \times 10^{(B+A/T)}}$$

With the following procedure the coefficients A and B can be defined for the equation:

$$\mathbf{LOG(PPM_{sat}) = B + A/T}$$

Equipment needed:

- Apparatus for determining water content (for example, coulometric titrator and e.g. magnetic stirrer.)
- Oil test station:
    - a temperature test chamber.
    - a suitable container (for example, a conical 1 L flask) sealed by PTFE stopper with an inlet for a moisture probe.
    - a Vaisala MMT162 transmitter.
    - a magnetic stirrer.

Procedure:

1. Define the water content of the oil sample with the titration. Use the oil moisture level that is close to real conditions in the process.
2. Measure the water activity of this sample with MMT162 at two temperatures that differ at least 20 °C.

NOTE	The sample has to be sealed very carefully. Contact with ambient air will change the water content.

NOTE	If the oil sample is very dry and the temperatures are close to each other, it may cause inaccuracy to the calculation model. In order to get the best possible performance it is recommended to use oil conditions that represent real conditions in application. Recommended values for sample are aw approx. 0.5 at 20 °C.

AKRIBIS · www.akribis.info · contacto@akribis.info

3. Define the correlation between aw, T and PPM (w/w) from the measured values. Calculate A and B according to the following example.

$$A = \frac{LOG(PPM_{sat}[T2]) - LOG(PPM_{sat}[T1])}{1/(T2) - 1/(T1)}$$

$$B = LOG(PPM_{sat}[T1]) - A/T1$$

Example (measured water content 213 ppm):

T (°C)	aw	$ppm_{saturation}$
24.1	0.478	213/0.478 = 445.6067
57.6	0.188	213/0.188 = 1132.979

A = (LOG(1132.98)-LOG(445.607))/(1/(57.6+273.16)-1/(24.1+273.16)) = -1189.4581

B= LOG(445.607)-(-1189.4581)/(24.1 + 273.16) = 6.6503583

Assumptions:

The isoterm of water activity versus water concentration is linear and the solubility curve has the form of the given equation.

CHAPTER 5
MAINTENANCE

This chapter provides information that is needed in basic maintenance of the product.

Cleaning

Clean the transmitter enclosure with a soft. lint-free cloth moistened with mild detergent.

Clean the sensor before storing the MMT162 probe and before calibration. For cleaning the the probe you need instrument air and heptane (C_7H_{16}) liquid. If heptane is not available, you can also use diesel oil or petrol. Dry with instrument air to prevent oxidation of the oil on the sensor. The oxidation of the oil on the sensor can cause extended response times or drifting.

1. Blow the probe head (with filter) with instrument air to remove the remains of oil.
2. Immerse the probe head into heptane liquid and rinse out the oil (for one minute maximum).
3. Dry the probe head with instrument air. In case you are going to calibrate the probe, remove the filter and dry the sensor with instrument air. Check that the sensor looks clean.

NOTE	Do not immerse the sensor in any polar solvents, for example ketones or alcohols.

AKRIBIS · www.akribis.info · contacto@akribis.info

Changing the Filter

1. Remove the filter from the probe.
2. Install a new filter on the probe. When using the stainless steel filter (for oil and fuel cell), take care to tighten the filter properly (recommended force 130 Ncm).

New filters can be ordered from Vaisala, see section Spare Parts and Accessories on page 68.

Changing the Sensor

If you need to change the sensor on your MMT162, contact a Vaisala Service Center. For contact details, see www.vaisala.com/servicecenters.

Error States

MMT162 has the following states that indicate a problem with the probe:

- Analog 4 - 20 mA current output at 0 mA
- Analog voltage output at 0 V
- Serial line outputs asterisk characters (*** **)

The asterisk characters on the serial line may also appear during the start-up procedure.

You can also check the error message via the serial interface by using the **ERRS** command. In case of constant error, please contact Vaisala; see section Technical Support on page 54.

AKRIBIS · www.akribis.info · contacto@akribis.info

Table 11 Error Messages

Error Message	Action
Voltage error	Internal error or invalid supply voltage.
T meas error	Internal error, can be caused by damage to the temperature sensor.
F meas error	Internal error, can be caused by damage to the HUMICAP® sensor.
Voltage too low error	Supplied operating voltage is too low for reliable operation.
Voltage too low for mA output	Supplied operating voltage is too low for reliable operation of the analog current output.
Voltage is too low for V output	Supplied operating voltage is too low for reliable operation of the analog voltage output.
Program flash check sum error	Internal error
Parameter check sum error	Internal error
INFOA check sum error	Internal error
SCOEFS check sum error	Internal error
CURRENT check sum error	Internal error

Unknown Serial Settings

If you are not sure what the current serial settings of your transmitter are, follow the steps below to connect to the transmitter. This procedure assumes you have the USB service cable available.

For more information on the USB service cable and the PuTTY terminal application, see section Serial Communication on page 23.

1. Connect the USB service cable to your PC, but do not connect it to the transmitter yet.
2. Start a terminal application and open a terminal session using the default serial settings of 19200 8 N 1.
3. Plug the USB service cable into the transmitter, and quickly send at least one hash character # to the serial line:

   #

4. The normal startup of the transmitter is now interrupted, and the transmitter is available for commands with the default serial settings. You can now check the transmitter's information by issuing the **?** command:

   ?

   The transmitter's currently stored serial settings are visible on the line marked **Baud P D S**.

AKRIBIS · www.akribis.info · contacto@akribis.info

Technical Support

For technical questions, contact the Vaisala technical support by e-mail at helpdesk@vaisala.com. Provide at least the following supporting information:

- Name and model of the product in question
- Serial number of the product
- Name and location of the installation site
- Name and contact information of a technically competent person who can provide further information on the problem.

For contact information of Vaisala Service Centers, see www.vaisala.com/servicecenters.

AKRIBIS · www.akribis.info · contacto@akribis.info

CHAPTER 6
CALIBRATION AND ADJUSTMENT

This chapter provides information that is needed in calibration and adjustment of the product.

NOTE	**Calibration** means comparing the instrument to a known reference, either against a second instrument or a known reference environment. Correcting the reading of the instrument so that is measures accurately is referred to as **adjustment**.

NOTE	It is important to clean the sensor before calibration as oil on the sensor can contaminate the salt bath and change the reference condition. For instructions, see section Cleaning on page 51.

MMT162 is fully calibrated and adjusted as shipped from factory. The calibration interval depends on the application. You can perform a calibration to check that the transmitter is within its accuracy specification.

Performing an accurate calibration and adjustment takes some time and preparation. Instead of doing it yourself, you can also have a Vaisala service center calibrate and adjust your transmitter. For service center contact information, see www.vaisala.com/servicecenters.

AKRIBIS · www.akribis.info · contacto@akribis.info

Adjustment Points

Humidity Measurement

You can adjust the humidity measurement of the MMT162 in one or two points:

- One-point adjustment changes the RH measurement offset or gain. The transmitter determines which coefficient (offset or gain) should be changed based on the measured humidity.
- Two-point adjustment changes both offset and gain. The following requirements apply to the two points:
    - The adjustment must be started from the dry end of the measurement, with the point being < 50 %RH.
    - The second point must be > 50 %RH.
    - There must be at least 30 %RH difference between the points.

Temperature Measurement

You can adjust the temperature measurement of the MMT162 in one or two points:

- One-point adjustment changes the T measurement offset.
- Two-point adjustment changes both offset and gain. The following requirements apply to the two points:
    - The adjustment must be started from the cool end of the measurement.
    - The second point must be at least 30 °C warmer than the first point.

AKRIBIS · www.akribis.info · contacto@akribis.info

Adjustment Procedures

You can calibrate and adjust MMT162 using Vaisala HUMICAP® hand-held moisture and temperature in oil meter MM70. See the following sections:

- Calibration and Adjustment Using MM70 and a Reference Probe below.
- Calibration and Adjustment Using MM70 and a Reference Environment on page 59.

Connecting to the serial interface using a computer and a terminal program allows you to perform calibration and adjustment tasks using serial commands. See the following sections:

- Relative Humidity Adjustment on Serial Line on page 62.
- Temperature Adjustment on Serial Line on page 64.

For checking and/or clearing the currently applied calibration coefficients on the serial line, see the following sections:

- Show User Calibration Coefficients on page 43.
- Set User Calibration Coefficients on page 43.

Calibration and Adjustment Using MM70 and a Reference Probe

Required equipment:

- A fully charged MI70 indicator (the measurement display that is included in the MM70 package)
- A calibrated MMP70 series probe (included with the MM70 hand-held meter)
- Connection cable for MM70 hand-held meter (219980)

You can check and adjust the MMT162 using the MM70 hand-held meter and a calibrated reference probe. You can perform this procedure while the MMT162 is installed in oil if the environment is stable enough.

1. Plug in the connection cable 219980 to port II of the MMT162, and the other end to port II of the MI70 indicator.
2. Connect the reference probe to port I of the MI70 indicator.
3. Insert the reference probe in the same environment as the MMT162.

AKRIBIS · www.akribis.info · contacto@akribis.info

4. Wait for 30 minutes for temperature and humidity to stabilize.
5. Turn on the MI70.
6. Select **Display → Quantities and units** from the menu of the MI70, and verify that measurements from both ports (I and II) are available. If the MMT162 is not detected, it may be because it is already powered up and using non-default serial line settings. Try the following steps:
   a. Turn off the MI70.
   b. Disconnect the cable from port I of the MMT162.
   c. Turn on the MI70.
7. Select **Functions → Adjustments (II)** from the menu of the MI70 and press **Start**. Make sure the symbol for port II is shown after the word "Adjustments", as your reference probe may also be adjustable using the MI70.
8. The adjustment mode starts. Automatic power off is disabled while in adjustmend mode; press **OK** to acknowledge the message.
9. Select the parameter to calibrate and adjust (RH or T) from the list and press **Select**. This procedure is applicable for both parameters, but the following steps will assume you selected RH.
10. Check and adjust the environment settings of the reference probe if prompted by the MI70.
11. The adjustment mode now shows the value of the selected parameter from both instruments, and a delta parameter (for example, ΔRH) that shows the difference between the two. The difference should be no greater than the combined measurement uncertainty of the MMT162 transmitter and the reference probe. Depending on the result, proceed as follows:
    - If the MMT162 transmitter is within its accuracy specification, there is no need to proceed with the adjustment. Select **Back** and **Exit** to leave the adjustment mode.
    - If adjustment is required, continue with the next step.
12. Select Adjust, and then select **To same as RH (I)**.
13. The MI70 will ask **Do you really want to adjust**? Select **Yes**. MI70 shows the text **Adjustment done** and returns to the adjustment mode after a few seconds. Check the value of the delta parameter to verify that the adjustment has taken effect.
14. Select **Back** to return to the parameter selection screen.
15. Select a new parameter for adjustment and proceed as instructed above, or select **Exit** to leave the adjustment mode.

AKRIBIS · www.akribis.info · contacto@akribis.info

Calibration and Adjustment Using MM70 and a Reference Environment

Required equipment:

- A fully charged MI70 indicator (the hand-held measurement display included in the MM70 package)
- Connection cable for MM70 hand-held meter (219980)
- One or two reference environments that fulfill the requirements listed in section Adjustment Points on page 56.

For example, you can use the Vaisala HMK15 humidity calibrator for a two-point humidity calibration and adjustment. Use the LiCl (11 %RH) and NaCl (75 %RH) salt solutions. You also need the special cover set for HMK15 (230914). For a two-point calibrations using HMK15, use a dedicated cover for each salt chamber to avoid long stabilization times and possible contamination of the salt references.

1. Plug in the connection cable 219980 to port II of the MMT162, and the other end to port II of the MI70 indicator.
2. If any cable is connected to port I of the MMT162, disconnect it.
3. If the MMP70 probe is connected to the MI70 indicator, disconnect it.
4. Remove the filter from MMT162 and insert the probe in the reference environment (for example, the LiCl (11 %RH) salt chamber).
5. Wait for 30 minutes for temperature and humidity to stabilize.
6. Turn on the MI70 indicator.
7. Select **Functions** → **Adjustments** from the menu of the MI70 and press **Start**.

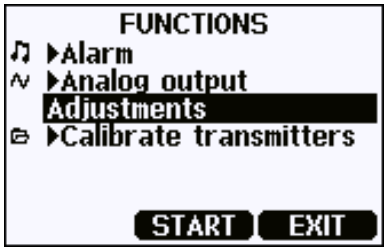

AKRIBIS · www.akribis.info · contacto@akribis.info

8. The adjustment mode starts. Automatic power off is disabled while in adjustmend mode; press **OK** to acknowledge the message.
9. Select the parameter to calibrate and adjust (RH or T) from the list and press **Select**. This procedure is applicable for both parameters, but the following steps will assume you selected RH.
10. The adjustment mode should now show a stable, unchanging RH value. The difference between the measured value and the reference humidity should be no greater than the combined measurement uncertainty of the MMT162 transmitter and the reference environment. Depending on the result, proceed as follows:
    - If the MMT162 transmitter is within its accuracy specification, there is no need to proceed with the adjustment. Select **Back** and **Exit** to leave the adjustment mode.
    - If adjustment is required, continue with the next step.

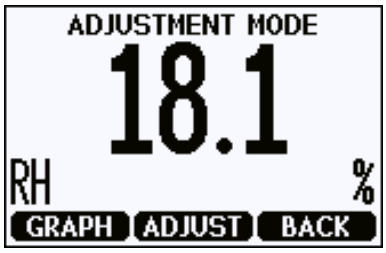

11. Press **Adjust** and select **1-point adjustment** or **2-point adjustment.**
12. Press **Ready** and enter the correct value (the reference value) for the parameter you are adjusting. Press **OK** when done, and **YES** when asked if you really want to adjust.
13. You have now entered the first adjustment point. If you selected **1-point adjustment**, you will see the text **Adjustment done**. You have now completed the 1-point adjustment. Select **Back** and **Exit** to leave the adjustment mode.

    If you are doing a **2-point adjustment**, the indicator shows the screen for the second reference point. Continue with the next step.

    If something went wrong with the adjustment, check that your reference environment fulfills the requirements listed in section Adjustment Points on page 56, and that the measurement had properly stabilized. Retry the adjustment after checking.
14. Transfer the MMT162 to the second reference environment (for example, the NaCl (75 %RH) salt chamber).

AKRIBIS · www.akribis.info · contacto@akribis.info

15. Wait for the measured value to stabilize and press **Ready**. Enter the correct value of the reference point. Press **OK** when done, and **YES** when asked if you really want to adjust.
16. You will see the text **Adjustment done**. You have now completed the 2-point adjustment. Select **Back** to return to the parameter selection screen, and **Exit** to leave the adjustment mode.
17. Remove the MMT162 from the reference environment and reattach the filter.

AKRIBIS · www.akribis.info · contacto@akribis.info

Relative Humidity Adjustment on Serial Line

Required equipment:

- Computer with
    - Windows operating system
    - Terminal application
    - Free USB port
    - Driver for Vaisala USB cable installed
- USB serial interface cable (219690)
- One or two humidity references that fulfill the requirements listed in section Adjustment Points on page 56.

For example, you can use the Vaisala HMK15 humidity calibrator for a two-point humidity calibration and adjustment. Use the LiCl (11 %RH) and NaCl (75 %RH) salt solutions. You also need the special cover set for HMK15 (230914). For two-point calibrations using HMK15, use a dedicated cover for each salt chamber to avoid long stabilization times and possible contamination of the salt references.

1. If any cable is connected to port I of the MMT162, disconnect it.
2. Remove the filter from the MMT162 and insert the sensors into the humidity reference. If you are starting a two-point calibration, start with the dry end reference. If you are using the HMK15, start with the LiCl salt bath (11 %RH).
3. Wait at least 30 minutes for the humidity to stabilize.
4. Connect the MMT162 to a PC, see section Serial Communication on page 23. Then open a terminal program.
5. Enter the **`l`** command to view the currently active calibration coefficients. For more information, see section Show User Calibration Coefficients on page 43.
6. Enter the **`crh`** command and press Enter:

   ```
   crh
   ```

7. Type **`c`** and press Enter to update the reading and verify that the reading has stabilized:

   ```
   RH  :  11.9206 1. ref ? c
   RH  :  11.9206 1. ref ?
   ```

8. When the reading is stable, enter the reference humidity after the question mark and press Enter:

   ```
   RH  :  11.9191 1. ref ? 11.3
   Press any key when ready ...
   ```


AKRIBIS · www.akribis.info · contacto@akribis.info

9. The first adjustment point is now stored. Now you have to choose:
   - Press Enter **once** to continue to the next step of the procedure (two-point adjustment). The adjustment sequence continues to the second reference point:

     ```
     RH  :  11.3143 2. ref ?
     ```

   - Press Enter **twice** to exit the procedure now, completing a one-point adjustment only. The adjustment sequence ends with the text **OK**. Continue to step 12.

     ```
     OK
     ```

10. Transfer the probe to the second humidity reference. If you are using the HMK15, use the NaCl (75 %RH) salt bath. Do not disconnect the cable from the transmitter or the adjustment sequence will be interrupted.
11. Wait for the humidity to stabilize. Type **c** and press Enter to update the reading and verify that the reading has stabilized:

    ```
    RH  :  68.0236 2. ref ? c
    RH  :  71.1774 2. ref ?
    ```

12. When the reading is stable, enter the reference humidity after the question mark and press Enter:

    ```
    RH  :  74.3220 2. ref ? 75.5
    OK
    ```

13. The RH adjustment is now complete. Enter the **l** command to verify that the calibration coefficients for RH have changed.
14. Remove the MMT162 from the reference environment and reattach the filter.

AKRIBIS · www.akribis.info · contacto@akribis.info

Temperature Adjustment on Serial Line

Required equipment:

- Computer with
  - Windows operating system
  - Terminal application
  - Free USB port
  - Driver for Vaisala USB cable installed
- USB serial interface cable (219690)
- One or two temperature references that fulfill the requirements listed in section Adjustment Points on page 56.

1. If any cable is connected to port I of the MMT162, disconnect it.
2. Remove the filter from the MMT162 and insert the sensors into the temperature reference. If you are starting a two-point calibration, start with the lower temperature reference.
3. Wait at least 30 minutes for the temperature to stabilize.
4. Connect the MMT162 to a PC, see section Serial Communication on page 23. Then open a terminal program.
5. Enter the **`l`** command to view the currently active calibration coefficients. For more information, see section Show User Calibration Coefficients on page 43.
6. Enter the **`ct`** command and press Enter:

   ```
   ct
   ```

7. Type **`c`** and press Enter to update the reading and verify that the reading has stabilized:

   ```
   T  :  22.3106 1. ref ? c
   T  :  22.3251 1. ref ?
   ```

8. When the reading is stable, enter the reference temperature after the question mark and press Enter:

   ```
   T  :  22.3261 1. ref ? 22.3
   Press any key when ready ...
   ```


AKRIBIS · www.akribis.info · contacto@akribis.info

9. The first adjustment point is now stored. Now you have to choose:
   - Press Enter **once** to continue to the next step of the procedure (two-point adjustment). The adjustment sequence continues to the second reference point:

     ```
     T  :  22.3009 2. ref ?
     ```

   - Press Enter **twice** to exit the procedure now, completing a one-point adjustment only. The adjustment sequence ends with the text **OK**. Continue to step 12.

     ```
     OK
     ```

10. Transfer the probe to the second temperature reference. Do not disconnect the cable from the transmitter or the adjustment sequence will be interrupted.
11. Wait for the temperature to stabilize. Type **c** and press Enter to update the reading and verify that the reading has stabilized:

    ```
    T  :  54.1243 2. ref ? c
    T  :  54.1442 2. ref ?
    ```

12. When the reading is stable, enter the reference temperature after the question mark and press Enter:

    ```
    T  :  55.1841 2. ref ? 55.1
    OK
    ```

13. The temperature adjustment is now complete. Enter the **l** command to verify that the calibration coefficients for T have changed.
14. Remove the MMT162 from the reference environment and reattach the filter.

Analog Output Adjustment

In the analog output calibration the analog output is forced to the following values:

- Current output: 2 mA and 18 mA.
- Voltage output: 10 % and 90 % of the range.

Connect MMT162 to a calibrated current/voltage meter in order to measure either current or voltage depending on the selected output type.

To calibrate analog output, see section Calibrate Analog Output on page 36.

AKRIBIS · www.akribis.info · contacto@akribis.info

CHAPTER 7

TECHNICAL DATA

This chapter provides the technical data of the product.

Specifications

Table 12 Water Activity / Relative Saturation

Property	Description / Value
Measurement range a_w / %RS	a_w 0...1 (@-40...+180 °C/ -40...+356 °F) %RS 0 … 100 %RS
Accuracy (including nonlinearity, hysteresis and repeatability) when calibrated against salt solutions (ASTM E104-85):	a_w ±0.02 (0...0.9) ±2 %RS (0 ... 90 %RS) a_w ±0.03 (0.9...1.0) ±3 %RS (90 ... 100 %RS)
Response time in oil flow (typical) with stainless steel filter	< 1 min. (dry-wet)
Sensor	HUMICAP®

Table 13 Temperature

Property	Description / Value
Measurement range	-40 ... +80 °C (-40 ... +176 °F)
Typical accuracy at +20 °C (+68 °F)	±0.2 °C (±0.36°F)
Typical temperature dependence of electronics	± 0.005 °C/°C (± 0.003 °F/°F)
Temperature sensor	Pt 100 RTD Class F0.1 IEC 60751

Table 14 Operating Environment

Property	Description / Value
Operating temperature	-40 ... +60 °C (40 ... +140°F)
Pressure range	Metal version: up to 200 bar Plastic version: up to 40 bar
Complies with EMC standard	EN61326-1: Industrial environment
Oil flow	Some flow recommended

AKRIBIS · www.akribis.info · contacto@akribis.info

Table 15 Inputs and Outputs

Property	Description / Value
Minimum operating voltage with current output with voltage output with RS-485	 22 … 28 VDC 16 … 28 VDC 14 … 28 VDC
Supply current normal measurement	 20 mA + load current
External load for current output for voltage output	 max.500 Ω min. 10 kΩ
Analog outputs (2 standard) current output voltage output	 0 ... 20 mA, 4 ... 20 mA 0 ... 5 V, 0 ... 10 V
Accuracy of analog outputs at 20 °C	± 0.05 % full scale
Temperature dependence of analog outputs	Current: ± 0.005 %/°C full scale Voltage:
Digital output	RS-485

Table 16 Mechanics

Property	Description / Value
Interface cable connector	M8 series 4-pin (male) with plug (female) with straight or 90° angle connector
Probe cable diameter	5.5 mm
Probe cable lengths shielded cables 90° angle cable LED cable	 0.32 m, 3 m, 5 m and 10 m 2 m and 5 m 3 m
Housing material metal plastic	 AISI 316L PPS + 40% GF
Housing classification	Metal housing: IP66 Plastic housing: IP65
Mechanical connections Option 1 Option 2	 ISO G1/2" NPT 1/2"
Weight Metal with ISO thread Metal with NPT thread Plastic with ISO thread	 200 g 200 g 65 g

AKRIBIS · www.akribis.info · contacto@akribis.info

Spare Parts and Accessories

Information on spare parts, accessories, and calibration products is available online at www.vaisala.com and store.vaisala.com.

Description	Order code
Connection cable for MM70	219980
USB serial interface cable	219690
CH1 signal + Ch2 LED cable, M8 threaded connector	MP300LEDCBL
Sealing ring set (copper) ISO G1/2, 3 pieces	221524SP
Sealing ring set (U-seal) ISO G1/2, 3 pieces	221525SP
Protection plug for connector	218675
ISO 1/2" plug	218773
NPT 1/2" plug	222507
110 … 240 VAC external power supply	POWER-1
Calibration adapter for HMK15	211302SP
Special cover set for HMK15	230914
Weather shield	ASM245628SP
Filters	
Stainless steel grid filter (with 3 mm holes)	225356SP
Stainless steel grid filter for high flow (with 2 mm holes, for > 1 m/s flow)	221494SP
Analog/RS-485 output cables	
0.32 m (1 ft) shielded cable, M8 threaded connector	HMP50Z032
3 m (9.8 ft) shielded cable, M8 threaded connector	HMP50Z300
5 m (16.4 ft) shielded cable, M8 threaded connector	HMP50Z500
10 m (32.8 ft) shielded cable, M8 threaded connector	HMP50Z1000
2 m (9.8 ft) cable, 90° angle connector	221739
5 m (16.4 ft) cable, 90° angle connector	221740
Sampling cells (available only for ISO G1/2")	
Sampling cell	DMT242SC
Sampling cell with 1/4" male Swagelok connectors	DMT242SC2

AKRIBIS · www.akribis.info · contacto@akribis.info

Dimensions in mm (inches)

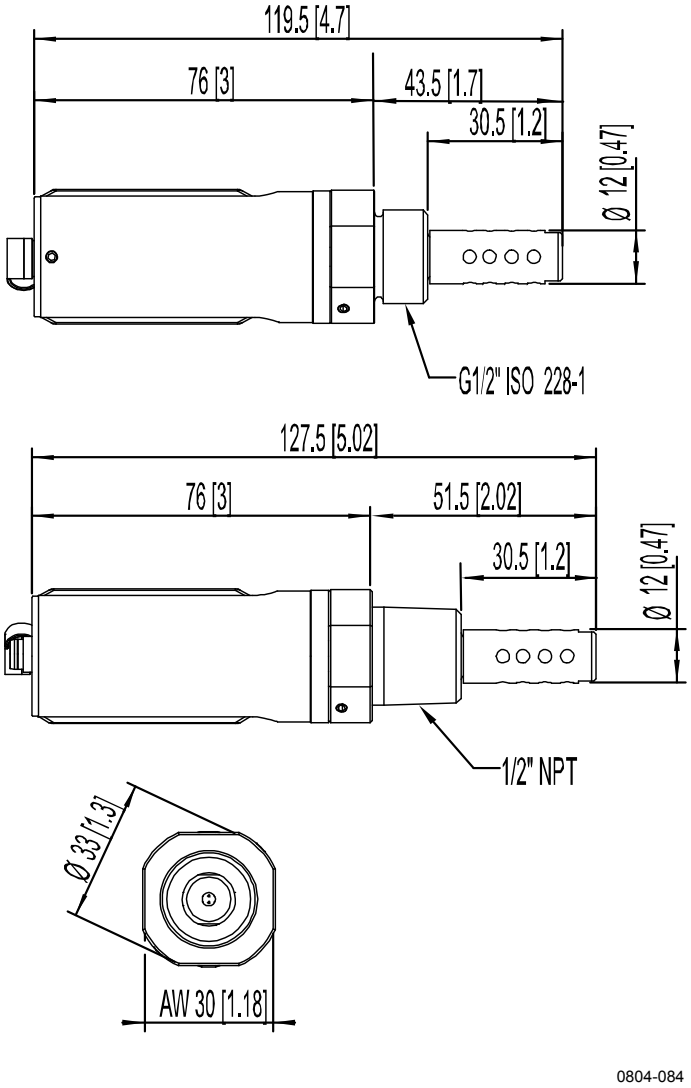

Figure 13 Metal Housing Transmitter Dimensions

AKRIBIS · www.akribis.info · contacto@akribis.info

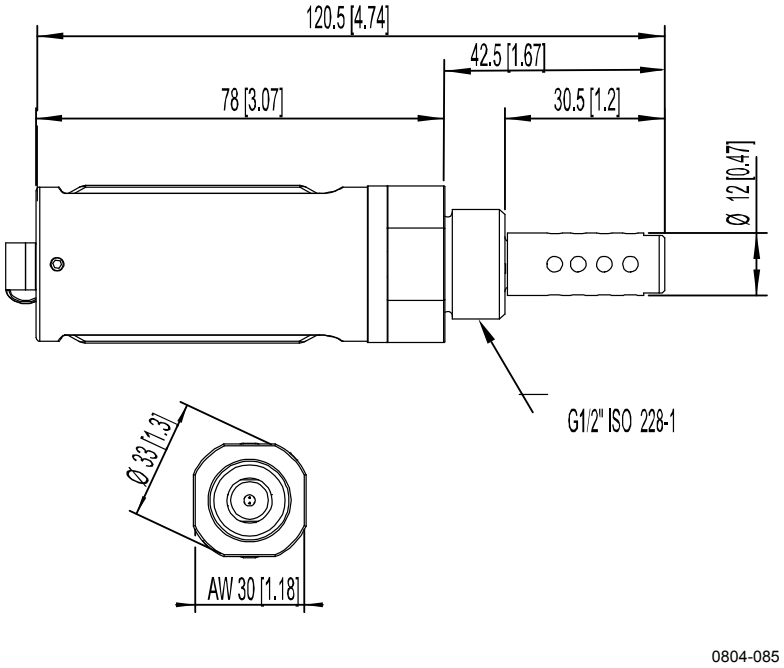

Figure 14 Plastic Housing Transmitter Dimensions

AKRIBIS · www.akribis.info · contacto@akribis.info

APPENDIX A
MODBUS REFERENCE

This appendix describes the Modbus protocol implementation of the MMT162 transmitter.

Default Communication Settings

Table 17 below shows the default communication settings when Modbus is enabled at the factory. For information on how to configure the communication settings using serial line commands, see Table 10 on page 46.

Table 17 Default Communication Settings

Setting	Default Value
Bit rate	19200
Number of data bits	8
Parity	E
Number of stop bits	1
Device address	240
Response delay	0
Communication mode	MODBUS

NOTE You can also change device address with Modbus itself (register 1537).

Supported Modbus Functions

Table 18 Supported Function Codes

Function Code (decimal)	Function Code (hexadecimal)	Function Name (as defined by the specification)	Notes
3	03	Read Holding Registers	See Table 19 on page 72 for available registers.
16	10	Write Multiple Registers	See Table 19 on page 72 for available registers.
43 14	2B 0E	Read Device Identification	See Table 20 on page 73 for available device identification objects.

NOTE After power-up, wait for five seconds before sending Modbus requests.

AKRIBIS · www.akribis.info · contacto@akribis.info

Modbus Register Map

Table 19 Modbus Register Map

Logical Address (decimal)	PDU Address (hexadecimal)	Register Description		Data Format	Register Type	Notes
3	00 02	T (measured)	LSW	32-bit float	read-only	°C
4	00 03		MSW			
29	00 1C	a_w (measured)	LSW	32-bit float	read-only	
30	00 1D		MSW			
35	00 22	H_2O (oil) (measured) *	LSW	32-bit float	read-only	ppm
36	00 23		MSW			
513	02 00	Fault status		16-bit boolean	read-only	1 = no errors
516	02 03	Error Code	LSW	32-bit bit field	read-only	0 = no errors
517	02 04		MSW			
785	03 10	Oil factor A (set value) *	LSW	32-bit float	read/write	
786	03 11		MSW			
787	03 12	Oil factor B (set value) *	LSW	32-bit float	read/write	
788	03 13		MSW			
1537	06 00	Address		16-bit integer	read/write	1…255 (1 … 247 allowed in Modbus)

* Availability of the register depends on the device model.

PDU address	Actual address bytes used in a Modbus Protocol Data unit.
LSW	Least significant word (bits 15 … 0).
MSW	Most significant word (bits 31 … 16).
16-bit integer	Numeric value in range 0 … 65535.
16-bit boolean	Numeric value, 0 or 1.
32-bit bit field	32 individual values, each 0 or 1.
32-bit float	Floating point number encoded according to IEEE 754.
read-only	Register value cannot be changed with Modbus functions.
read/write	Register value can be changed with Modbus functions.

AKRIBIS · www.akribis.info · contacto@akribis.info

Device Identification Objects

Table 20 Device Identification Objects

Object Id (decimal)	Object Id (hexadecimal)	Object Name (as defined by the specification)	Example
0	00	VendorName	Vaisala
1	01	ProductCode	MMT162
2	02	MajorMinorVersion	1.10
3	03	VendorUrl	http://www.vaisala.com
4	04	ProductName	Vaisala HUMICAP® Moisture and Temperature Transmitter for Oil MMT162
128	80	SerialNumber*	H0510038
129	81	CalibrationDate*	2014-08-21
130	82	CalibrationText*	Vaisala/HEL

* Vaisala-specific device information object

NOTE Both stream access and individual access to the device identification objects are supported.

AKRIBIS · www.akribis.info · contacto@akribis.info

www.vaisala.com

M210934EN

AKRIBIS · www.akribis.info · contacto@akribis.info