USER GUIDE

MGP261

Vaisala · Authorized Partner

Distributed by AKRIBIS

M212504EN-C

User Guide

MGP260 Series Multigas Probes for Methane, Carbon Dioxide, and Humidity Measurement

MGP260

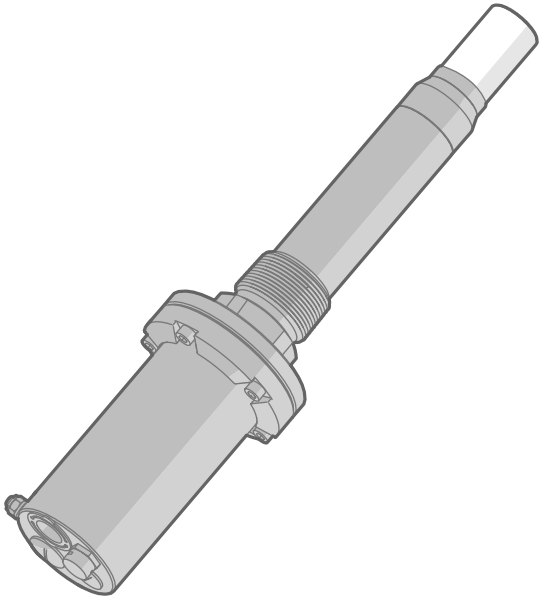

VAISALA

AKRIBIS · www.akribis.info · contacto@akribis.info

PUBLISHED BY

Vaisala Oyj
Vanha Nurmijärventie 21, FI-01670 Vantaa, Finland
P.O. Box 26, FI-00421 Helsinki, Finland
+358 9 8949 1
www.vaisala.com
docs.vaisala.com

© Vaisala 2023

No part of this document may be reproduced, published or publicly displayed in any form or by any means, electronic or mechanical (including photocopying), nor may its contents be modified, translated, adapted, sold or disclosed to a third party without prior written permission of the copyright holder. Translated documents and translated portions of multilingual documents are based on the original English versions. In ambiguous cases, the English versions are applicable, not the translations.

The contents of this document are subject to change without prior notice.

Local rules and regulations may vary and they shall take precedence over the information contained in this document. Vaisala makes no representations on this document's compliance with the local rules and regulations applicable at any given time, and hereby disclaims any and all responsibilities related thereto.

This document does not create any legally binding obligations for Vaisala towards customers or end users. All legally binding obligations and agreements are included exclusively in the applicable supply contract or the General Conditions of Sale and General Conditions of Service of Vaisala.

Table of contents

1. About this document ... 9
1.1 Version information ... 9
1.2 Related manuals ... 10
1.3 Documentation conventions ... 10
1.4 Trademarks ... 10

2. Product overview ... 12
2.1 Introduction to MGP260 series ... 12
2.2 Basic features and options ... 12
2.2.1 Hazardous area safety ... 13
2.2.2 Measurement parameters ... 13
2.2.3 Wet basis and dry basis measurement output ... 13
2.2.4 Connectivity to Vaisala Insight software ... 14
2.3 Probe parts ... 15
2.3.1 Lead-through options and breather plug ... 16
2.4 Measurement principle ... 18

3. MGP260 regional Ex certification overview ... 21
3.1 Regional Ex certification overview ... 21
3.2 EU (ATEX), international (IECEx), and US/CAN (MET) Ex certification information ... 22
3.2.1 Using MGP260 series probes in hazardous locations ... 22
3.2.2 Guidelines for safe use in hazardous conditions ... 23
3.3 UK (UKEX) Ex certification information ... 25
3.3.1 Using MGP260 series probes in hazardous locations ... 26
3.3.2 Guidelines for safe use in hazardous conditions ... 27
3.4 Japan (CML) Ex certification information ... 29
3.4.1 Using MGP260 series probes in hazardous locations ... 29
3.4.2 Guidelines for safe use in hazardous conditions ... 31
3.5 Korea (KCs) Ex certification information ... 33
3.5.1 Using MGP260 series probes in hazardous locations ... 33
3.5.2 Guidelines for safe use in hazardous conditions ... 35

4. Installation ... 38
4.1 Installation overview ... 38
4.1.1 NPT 1.5″ thread test plug 257525SP ... 38
4.1.2 Installation preparations ... 39
4.1.3 Installation option: installation in threaded port ... 39
4.1.4 Installation option: ball valve installation ... 41
4.1.5 Installation option: flow-through adapter installation ... 44
4.1.6 MGP260 dimensions ... 45
4.1.7 Recommended installation position on pipeline ... 45
4.1.8 Gas safety during installation ... 46
4.1.9 Pressure compensation input options ... 46
4.2 Preparing probe for installation ... 47
4.3 Inserting probe into process and opening connection box ... 48

4.4 Wiring 50
4.4.1 Wiring diagram..... 52
4.5 Finalizing installation..... 53
4.6 Attaching flow-through adapter to MGP260..... 53

5. Operating with Insight software..... 56
5.1 Vaisala Insight PC software..... 56
5.1.1 Basic and Advanced user modes..... 56
5.2 Connecting to Insight software..... 57
5.2.1 Installing the driver for the USB service cable..... 58
5.3 Insight main view..... 59

6. Modbus..... 60
6.1 Configuring Modbus communication settings with Insight..... 61

7. Analog output configuration..... 62
7.1 Analog output configuration overview..... 62
7.1.1 Default parameter configuration of output channels..... 62
7.2 Configuring analog outputs with Modbus..... 62
7.3 Configuring analog outputs with Insight..... 63
7.4 Changing units in Insight..... 64
7.5 Wet basis and dry basis measurement parameters..... 64

8. Environmental compensation..... 66
8.1 Environmental compensation overview..... 66
8.1.1 Temperature compensation..... 66
8.1.2 Pressure compensation..... 66
8.1.3 Compensation mode during calibration..... 67
8.2 Configuring environmental compensations with Modbus..... 67
8.3 Configuring environmental compensations with Insight..... 68
8.3.1 Configuring setpoint values for compensations with Insight..... 70
8.3.2 Using probe measurement as temperature compensation..... 70
8.3.3 Using compensation received from external temperature or pressure sensor..... 71
8.3.4 Configuring input from external analog pressure or temperature sensor..... 71
8.3.5 Sending analog input channel value from an analog output channel..... 73

9. Calibration..... 74
9.1 Calibration recommendations..... 74
9.2 Calibration overview..... 74
9.2.1 Compensation mode during calibration..... 75
9.2.2 Flow-through adapter..... 75

9.3 Calibration and adjustment with Insight PC software 77
9.3.1 Example: 2-point adjustment with zero point adjustment 78
9.3.2 Zero point adjustment 78
9.3.3 Calibrating and adjusting methane (CH_4) measurement 80
9.3.4 Calibrating and adjusting carbon dioxide (CO_2) measurement 80
9.3.5 Calibrating and adjusting temperature measurement 81

10. Maintenance 83
10.1 Maintenance overview 83
10.2 Filter change 83
10.3 Removing probe from process 84
10.4 Cleaning the probe 85
10.5 Sending probe to Vaisala 86

11. Technical data 88
11.1 Specifications 88
11.2 Flow-through adapter dimensions 92
11.3 MGP260 dimensions 93
11.4 Wetted parts material information 94
11.5 Recycling instructions 94

Appendix A: Modbus reference 96
A.1 Modbus registers 96
A.1.1 Measurement data registers 96
A.1.2 Configuration registers 98
A.1.3 Status registers 109
A.1.4 Device identification objects 112

Maintenance and calibration services 115

Warranty 115

Technical support 115

Recycling 115

List of figures

Figure 1 MGP261 output parameter selections in Vaisala Insight PC software.... 14
Figure 2 MGP260 probe parts (closed and opened view).... 16
Figure 3 Lead-through options and breather plug 17
Figure 4 Probe cuvette with mirror and sensor chips.... 18
Figure 5 Measurement in the measurement cuvette.... 19
Figure 6 MGP260 Ga/Gb division.... 23
Figure 7 MGP260 Ga/Gb division.... 27
Figure 8 MGP260 Ga/Gb division.... 31
Figure 9 MGP260 Ga/Gb division.... 35
Figure 10 NPT 1.5″ thread test plug.... 38
Figure 11 MGP260 threaded port installation example with wiring routes and recommended orientation and depth.... 40
Figure 12 MGP260 ball valve installation example with wiring routes and recommended orientation and depth.... 42
Figure 13 MGP260 in flow-through adapter 258877.... 44
Figure 14 MGP260 dimensions in millimeters and inches.... 45
Figure 15 Recommended MGP260 installation position on pipeline.... 45
Figure 16 MGP260 screw terminal markings and cable routes.... 50
Figure 17 MGP260 wiring diagram.... 52
Figure 18 Connecting probe to Insight.... 57
Figure 19 Insight main menu and settings.... 59
Figure 20 Modbus communication settings in Insight PC software.... 61
Figure 21 Analog output configuration options in Insight (MGP262 example).... 63
Figure 22 Unit selection in Insight.... 64
Figure 23 Measurement menu view in Insight PC software 69
Figure 24 Analog input 1 configuration menu in Insight.... 72
Figure 25 Input level selection in Insight analog output configuration options (MGP262 example).... 73
Figure 26 Flow-through adapter 258877.... 76
Figure 27 Calibration menu view in Insight PC software.... 77
Figure 28 Zero point adjustment tab.... 79
Figure 29 Temperature adjustment view in Insight.... 81
Figure 30 Replacing filter.... 83
Figure 31 Flow-through adapter dimensions with MGP260 probe.... 92
Figure 32 Flow-through adapter mounting plate dimensions.... 93
Figure 33 MGP260 dimensions in millimeters and inches.... 93
Figure 34 Removing parts for recycling.... 95
Figure 35 Probe body and component board: dispose as electrical and electronic waste.... 95

List of tables

Table 1 Document versions (English) 9
Table 2 Related manuals 10
Table 3 MGP261 measurement parameters 13
Table 4 MGP262 measurement parameters 13
Table 5 Ex classifications by region 21
Table 6 MGP260 series hazardous area classifications 22
Table 7 Screw terminal wiring requirements 24
Table 8 Intrinsic safe IIB output parameters 24
Table 9 MGP260 series hazardous area classifications 26
Table 10 Screw terminal wiring requirements 28
Table 11 Intrinsic safe IIB output parameters 28
Table 12 MGP260 series hazardous area classifications 30
Table 13 Screw terminal wiring requirements 32
Table 14 Intrinsic safe IIB output parameters 32
Table 15 MGP260 series hazardous area classifications 34
Table 16 Screw terminal wiring requirements 36
Table 17 Intrinsic safe IIB output parameters 36
Table 18 Default Modbus serial communication settings 60
Table 19 ... 62
Table 20 Measurement performance 88
Table 21 Measurement performance 89
Table 22 Inputs and outputs 90
Table 23 Compliance 91
Table 24 Operating environment 91
Table 25 Mechanical specification 91
Table 26 Options and accessories 92
Table 27 Modbus measurement data registers (read-only) 96
Table 28 Modbus configuration data registers (writable) 98
Table 29 Modbus status data registers (read-only) 109
Table 30 Error codes in register 0200_{hex} (status code low) 111
Table 31 Error codes in register 0202_{hex} (status code high) 111
Table 32 Device identification objects 112

1. About this document

1.1 Version information

Table 1 Document versions (English)

Document code	Date	Description
M212504EN-C	October 2023	This document. Added information on installation limitations in condensing pipes and different Ex certifications in approval regions. Reliability specification updated. Added information on ball valve installation requirements and updated installation examples. PCEC certification removed. Modbus measurement data registers updated. Unit change from mbar to hPa, minor corrections and improvements. New sections: • Regional Ex certification overview (page 21) • EU (ATEX), international (IECEx), and US/CAN (MET) Ex certification information (page 22) • UK (UKEX) Ex certification information (page 25) • Japan (CML) Ex certification information (page 29) • Korea (KCs) Ex certification information (page 33) Updated sections: • Installation overview (page 38) • Installation preparations (page 39) • Installation option: ball valve installation (page 41) • Inserting probe into process and opening connection box (page 48) • Finalizing installation (page 53) • Specifications (page 88) • Measurement data registers (page 96)
M212504EN-B	April 2021	Previous version. Added MGP262 probe model, clarified pressure compensation requirements, analog output options updated.
M212504EN-A	October 2020	First version of the document.

1.2 Related manuals

Table 2 Related manuals

Document code	Description
M212481EN	MGP260 Series Multilingual ATEX/IECEx/MET Installation and Safety Guide (languages: English, German, French, Dutch, Spanish, Portuguese, Italian, Hungarian, Czech, Polish, Finnish, Estonian, Swedish, Norwegian, Danish)
M212764EN	MGP260 Series UKEX Installation and Safety Guide
M212500EN	MGP260 Series Multilingual Installation and Safety Guide (languages: English, Japanese, Chinese)
M212970	MGP260 Series Multilingual Installation and Safety Guide (languages: English, Korean)
M212538EN	MGP260 Series USB Service Cable 257295 Quick Guide
M212539EN	MGP260 Series Flow-through adapter 258877 Quick Guide
M212540EN	China ROHS disclosure report

1.3 Documentation conventions

WARNING! Warning alerts you to a serious hazard. If you do not read and follow instructions carefully at this point, there is a risk of injury or even death.

CAUTION! Caution warns you of a potential hazard. If you do not read and follow instructions carefully at this point, the product could be damaged or important data could be lost.

Note highlights important information on using the product.

1.4 Trademarks

Vaisala® and CARBOCAP® are registered trademarks of Vaisala Oyj.

All other product or company names that may be mentioned in this publication are trade names, trademarks, or registered trademarks of their respective owners.

2. Product overview

2.1 Introduction to MGP260 series

Vaisala CARBOCAP® MGP260 Series Multigas Probes for Methane, Carbon Dioxide, and Humidity Measurement are compact and durable in-situ probes for methane (CH_4), carbon dioxide (CO_2), and humidity (H_2O vapor) measurements in demanding biogas processing conditions. MGP260 series probes are Ex certified for use in Ex Zone 0 (parts inserted into process) and Ex Zone 1 (parts outside the process).

The MGP260 series includes two probe variants for different biogas process measurement applications. MGP261 is targeted at raw biogas measurement, whereas MGP262 is intended for offgas measurements in biogas upgrading facilities. All MGP260 series instruments are designed to be installed directly in the process gas pipeline, removing the need for sample treatment.

The application areas of the MGP261 variant include anaerobic digestion of industrial and municipal waste and sludge from waste water treatment, landfill gas monitoring, activated carbon filter monitoring in biogas treatment process, and CHP engine feed gas monitoring.

MGP262 probes are optimized for measuring methane concentrations below 5 vol-% and CO_2 concentrations above 90 vol-% in the offgas stream, making them ideal for a wide range of upgrading technologies and processes.

The MGP260 series proprietary infrared technology provides superior stability and repeatability. Thanks to condensation elimination through probe heating and corrosion-resistant steel and plastic materials, the IP66-rated instruments are highly robust and durable.

MGP260 series measurement output options include 3 analog current output channels (4–20 mA) and Modbus RTU over RS-485. The probes also provide a 4–20 mA Ex ia powered input for connecting an external pressure or temperature sensor.

For easy-to-use access to configuration, diagnostics, and calibration and adjustment functionalities, MGP260 probes can be connected to Vaisala Insight PC software with a USB cable accessory.

2.2 Basic features and options

- Available measurement parameters:
  - MGP261: methane (CH_4), carbon dioxide (CO_2), and humidity (H_2O vapor)
  - MGP262: methane (CH_4) and carbon dioxide (CO_2)
- Ex classification: IECEx certified for use in Class I Division 2 and Zone 0/1 environments: for full Ex classifications in different regions, see .Regional Ex certification overview (page 21).
- Operating pressure: -500 ... +500 hPa
- 3 analog outputs (4–20 mA, scalable, isolated)
- Digital output: Modbus RTU over RS-485
- Powered input for external pressure or temperature sensor (4–20 mA, Ex ia)

- Power supply input: 18–30 VDC
- Direct installation into process: for pipeline ports with 1.5″ female NPT thread
- Compatible with Vaisala Insight PC software

2.2.1 Hazardous area safety

CAUTION! Do not install or use MGP260 in a hazardous area before reviewing the safety information appropriate for your region in Regional Ex certification overview (page 21).

2.2.2 Measurement parameters

Table 3 (page 13) shows the units and ranges of MGP261 measurement parameters, and Table 4 (page 13) shows the units and ranges of MGP262 measurement parameters.

For further information on MGP261 and MGP262 measurement parameters, see Specifications (page 88).

Table 3 MGP261 measurement parameters

Parameter	Unit	Measurement range
Methane (CH_4)	Volume-%	0–100 vol-%
Carbon dioxide (CO_2)	Volume-%	0–100 vol-%
Water vapor (H_2O)	• Volume-% • Dew point temperature • Dew point and frost point temperature	• 0–25 vol-% • -10 ... +60 °C (14 ... +140 °F)

Table 4 MGP262 measurement parameters

Parameter	Unit	Measurement range
Methane (CH_4)	Volume-%	0–5 vol-%
Carbon dioxide (CO_2)	Volume-%	0–100 vol-%

2.2.3 Wet basis and dry basis measurement output

MGP261 methane, carbon dioxide, and water vapor measurements can be shown either as wet basis or dry basis values. The wet basis / dry basis measurement output selection is made when ordering the probe, and can be configured with Vaisala Insight PC software or Modbus.

Note that wet basis and dry basis value selection is only applicable to MGP261.

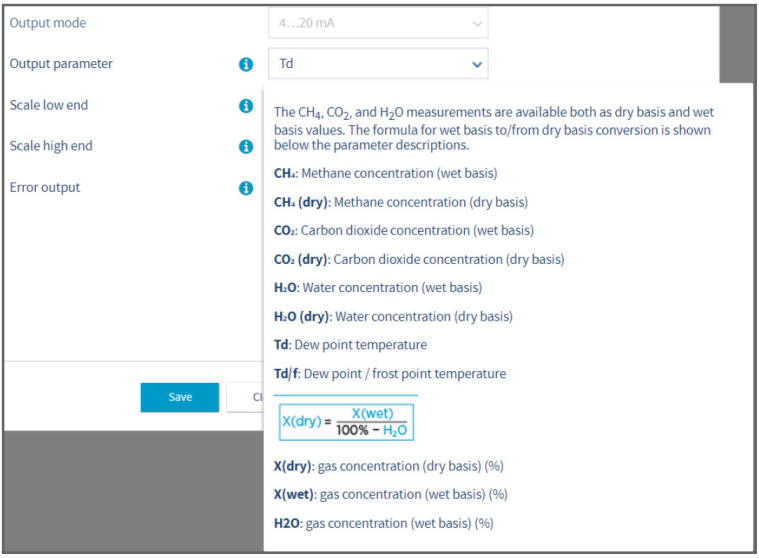

Figure 1 MGP261 output parameter selections in Vaisala Insight PC software

More information

- Configuring analog outputs with Insight (page 63)

2.2.4 Connectivity to Vaisala Insight software

The probe can be connected to Vaisala Insight software using a Vaisala USB cable (item code 257295). With the Insight software, you can:

- Calibrate and adjust the measurement.
- See device information and status.
- See real-time measurement.
- Configure serial communication settings, analog input and output parameters and scaling, and environmental compensations.

More information

- Connecting to Insight software (page 57)

2.3 Probe parts

Figure 2 (page 16) shows the MGP260 main components with the connection box of the probe closed and opened.

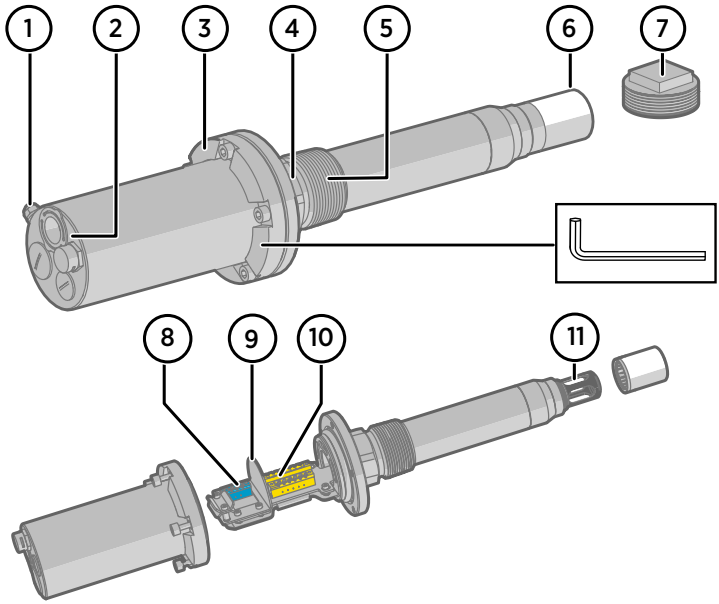

Figure 2 MGP260 probe parts (closed and opened view)

1 Grounding terminal: use a ≥ 4 mm^2 wire to connect to the grounding rail
2 Breather plug and lead-throughs for wiring: install cable glands as required and seal unused lead-throughs (see Lead-through options and breather plug (page 16))
3 Tightening flange of the connection box with captive Allen screws. Loosen the captive screws with a 5 mm (3/16 in) Allen key and open the connection box to access wiring terminals.
4 Tightening nut: only tighten from the tightening nut when installing (wrench size: 50 mm (1.97 in))
5 1.5″ male NPT thread: **never install to any other thread type than 1.5″ female NPT thread**
6 Probe filter. Note that the probe filter must always be fastened for the instrument to function as intended.
7 1.5″ NPT thread test plug
8 Wiring terminals for optional 4–20 mA input from external pressure or temperature sensor (Ex ia). This input is powered by the MGP260 probe.
9 Barrier separating the intrinsically safe (Ex ia) optional external sensor input terminals from the analog output, power supply input, and RS-485 terminals
10 Wiring terminals for 4–20 mA analog outputs, 18–30 V DC power supply input, and RS-485 communication
11 Measurement cuvette with optics and CARBOCAP® sensor inside the probe filter

2.3.1 Lead-through options and breather plug

Figure 3 (page 17) shows the MGP260 lead-through options and breather plug location.

Cable glands are not provided by Vaisala. When selecting cable glands for your application, review the applicable regional requirements in Regional Ex certification overview (page 21).

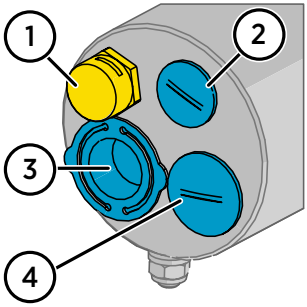

Figure 3 Lead-through options and breather plug

1 Breather plug: do not adjust.
2 M16x1.5 wiring lead-through: used when wiring the optional Ex ia external pressure or temperature sensor input terminal.
3 M20x1.5 wiring lead-through with removable plastic transport cover (fold sides of transport cover together and pull out). Wiring option for analog output, power supply input, and RS-485 terminals, or customer-specific additional wiring.
4 M20x1.5 wiring lead-through for analog output, power supply input, and RS-485 terminals.

CAUTION! Seal unused lead-throughs. Use only Ex compliant seals on the MGP260 lead-throughs.

More information

- Preparing probe for installation (page 47)
- Wiring (page 50)

2.4 Measurement principle

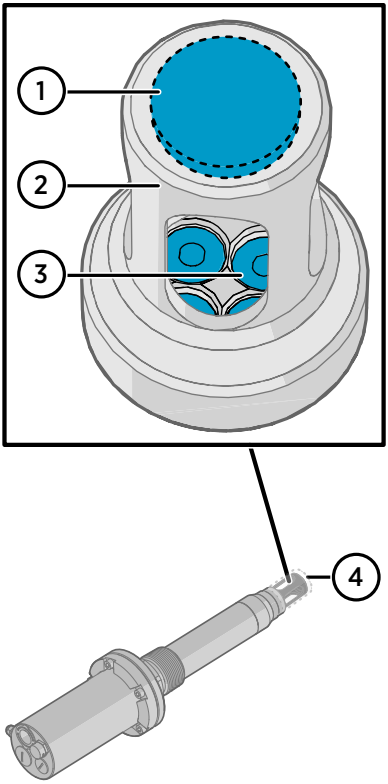

The Vaisala CARBOCAP® sensor used in the probe is a silicon-based, nondispersive infrared (NDIR) sensor for the measurement of methane (CH_4), carbon dioxide (CO_2), and humidity (H_2O).

Figure 4 Probe cuvette with mirror and sensor chips

1 Mirror
2 Cuvette
3 Sensor chips under TO5 packages
4 Probe filter covering the cuvette

CAUTION! Note that the probe filter must be in place when the probe is inserted into the process for the instrument to function as intended.

The sensitivity to gases is based on absorption of infrared light at a characteristic wavelength. During measurement, infrared light is routed through the cuvette that contains the gas to be measured. A mirror reflects the light from the cuvette to thermopile detectors that measure the light intensity at a wavelength determined by a Fabry–Pérot interferometer (FPI) and a band pass filter. One set of optics measures humidity and carbon dioxide, and a second one measures methane.

The measurement consists of two steps: first, the FPI is electrically tuned so that its pass band coincides with the characteristic absorption wavelength of the measured gas and the signal is recorded. Second, the pass band is shifted to a wavelength where no absorption occurs in order to get a reference signal. The ratio of these two signals, one at the absorption wavelength and the other at the reference wavelength, gives the fraction of light absorption from which the gas concentration is calculated. Measuring the reference signal compensates the possible effects of sensor aging and signal attenuation due to dirt on optical surfaces, making the sensor very stable over time.

TO5 packages with hermetic windows are used to protect the sensor chips from moisture and contamination.

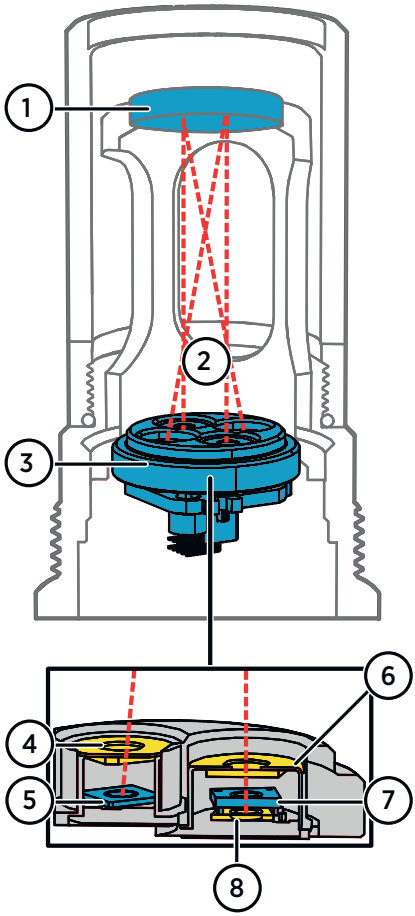

Figure 5 Measurement in the measurement cuvette

1 Mirror
2 Light absorbed by the measured gases
3 Sensor chips under TO5 packages (see items 4 ... 8)
4 Hermetic window
5 Thermopile detector
6 Hermetic window
7 Fabry–Pérot interferometer
8 Light source (Microglow)

More information

- Specifications (page 88)

3. MGP260 regional Ex certification overview

3.1 Regional Ex certification overview

The Ex certification requirements in different regions (for example, ATEX certification in the EU and CML certification in Japan) involve differences in, for example, the specific conditions of use that are applicable to the product in each region. The Ex certification information specific to each region is available in the following chapters:

EU (ATEX), international (IECEx), and US/CAN (MET) Ex certification information (page 22)

UK (UKEX) Ex certification information (page 25)

Japan (CML) Ex certification information (page 29)

Korea (KCs) Ex certification information (page 33)

MGP260 series Ex classification by region

Table 5 (page 21) shows the Ex classifications of MGP260 probes in each MGP260 certification region. For the most up-to-date list of regional certifications, see the MGP261 and MGP262 product pages at www.vaisala.com/MGP261 and www.vaisala.com/MGP262.

Table 5 Ex classifications by region

Certification region	MGP260 classification
IECEx (international) ATEX (EU) UKEX (UK)	Ex II 1/2 (1) G Ex eb mb [ia] IIB T3 Ga/Gb -40 °C ≤ Tamb ≤ +60 °C
USA/Canada (MET)	**NEC 500:** Class I, Division 2, Groups C & D; T3 **NEC 505:** Class I, Zone 0, AEx eb mb [ia] IIB T3 Ga/Gb **CSA 60079:** Ex eb mb [ia] IIB T3 Ga/Gb
Japan (CML)	Ex eb mb [ia] IIB T3 Ga/Gb
Korea (KCs) 인증 : 방호장치 안전인증 고시 2021-22호 인증번호 : 23-KA4BO-0282X	Ex eb mb [ia] IIB T3 Ga/Gb -40 °C ≤ Tamb ≤ +60 °C IECEx EESF 19.0006X 23-KA4BO-0282X

3.2 EU (ATEX), international (IECEx), and US/CAN (MET) Ex certification information

This chapter contains the Ex certification information (for example, specific conditions of use) related to the ATEX (EU), IECEx (international), and US/CAN (MET) certifications.

Translations of the certification information are available in the multilingual *MGP260 Installation and Safety Guide M212481EN* that can be found at the Vaisala documentation portal docs.vaisala.com.

A print copy of the ATEX/IECEx/MET applicable MGP260 Installation and Safety Guide (M212481EN) is delivered with the probe in EU (ATEX), international (IECEx), and CAN/US (MET) deliveries.

3.2.1 Using MGP260 series probes in hazardous locations

WARNING! MGP260 series probes have been designed for use in hazardous locations as specified by the product classification. The personnel installing, using, or maintaining MGP260 probes are responsible for determining the appropriate protection concept for the specific application the probe is used in, and that the hazardous area classification of the probe meets the requirements of the application.

WARNING! If the equipment is used in a manner not specified by Vaisala, the protection provided by the equipment may be impaired.

MGP260 probes are certified for use in hazardous areas as defined by the following classifications:

Table 6 MGP260 series hazardous area classifications

Certification	MGP260 classification
IECEx (international) ATEX (EU) UKEX (UK)	Ex II 1/2 (1) G Ex eb mb [ia] IIB T3 Ga/Gb -40 °C ≤ Tamb ≤ +60 °C
MET (US/CAN)	**NEC 500:** Class I, Division 2, Groups C & D; T3 **NEC 505:** Class I, Zone 0, AEx eb mb [ia] IIB T3 Ga/Gb **CSA 60079:** Ex eb mb [ia] IIB T3 Ga/Gb

CAUTION! The personnel installing, operating, and maintaining MGP260 probes must have the required competencies for working in the hazardous location, as defined by the applicable standards.

For information on the standards that apply to using MGP260 probes based on the classification of the device, see MGP260 certification documentation and the declarations of conformity related to MGP260 probes at www.vaisala.com/declarationofconformity.

3.2.2 Guidelines for safe use in hazardous conditions

Process connection and partition wall

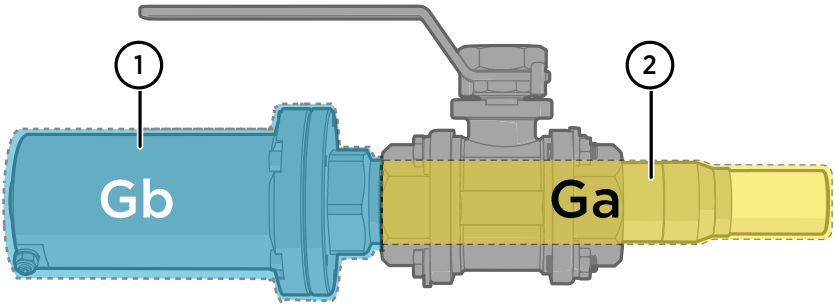

Figure 6 MGP260 Ga/Gb division

1 The part outside of the process (up until to the NPT 1.5″ connection thread) complies with the **Gb** Equipment Protection Level (EPL).
2 The part inside the process (starting from the NPT 1.5″ thread) complies with the **Ga** EPL. The partition wall is made of stainless steel, sapphire glass, and silicone adhesive. The stress limit temperature range of the silicone adhesive is -40 ... +60 °C (-40 ... +140 °F).

WARNING! While installing or uninstalling the device, there is a risk of flammable gas release or flame entrance.

Wiring requirements

- The wiring of the optional intrinsically safe (Ex ia) external pressure or temperature sensor input terminal must be kept separate from the analog output, power supply input, and RS-485 wiring.
  - See the installation overview and installation instructions for more information.
- The cable glands and cables used for wiring the device must not impair the Ex protection.
  - US/CAN: The cables used for wiring must have a flammability rating of UL 2556 VW-1 or equivalent.
  - Unused lead-throughs must be sealed using Ex compliant plugs.

- See Table 7 (page 24) for screw terminal requirements.
- Use an 18 ... 30 VDC power supply with the probe.
  - Permitted supply short-circuit current (I_k): 50 A.
  - US/CAN: only use a UL listed 18 ... 30 VDC (min. 6 W) power supply. The power supply must be UL/CSA 60950-1 certified.
  - MGP260 analog outputs must be externally powered.

CAUTION! Connect only de-energized wires. Never switch on the power supply input before completing the wiring and closing the connection box.

Table 7 Screw terminal wiring requirements

Property	Specification
Connection torque	0.5 Nm ... 0.6 Nm
Wire cross section / connection capacity (solid and flexible)	0.2 mm^2 ... 2.5 mm^2 (AWG 24 ... 12)
Stripping length	7 mm (0.27 in)

Intrinsic safety

The overvoltage category of MGP260 series probes is **I** (non-mains equipment), as defined in IEC 60664-1.

MGP260 probes are in conformance with the IEC 60079-11 dielectric strength requirement. For the intrinsic safe IIB output parameters, see Table 8 (page 24).

Table 8 Intrinsic safe IIB output parameters

Parameter	Value
U_o	25.2 V
I_o	78 mA
P_o	0.5 W
U_m	40 V
C_o	820 nF
L_o	20 mH

The parameters listed in Table 8 (page 24) apply when one of the two conditions below is given:

- the total L_i of the external circuit (excluding the cable) is < 1% of the L_o value; or
- the total C_i of the external circuit (excluding the cable) is < 1% of the C_o value.

The parameters are reduced to 50% when both of the two conditions below are given:

- the total L_i of the external circuit (excluding the cable) is ≥1% of the L_o value; and
- the total C_i of the external circuit (excluding the cable) is ≥1% of the C_o value.

Note: the reduced capacitance of the external circuit (including cable) shall not be greater than 1µF for Groups I, IIA, IIB & IIIC, and 600nF for Group IIC.

The values of L_o and C_o determined by this method shall not be exceeded by the sum of all of the L_i plus cable inductances in the circuit and the sum of all of C_i plus cable capacitances, respectively.

Connecting probe to Insight PC software

The Insight PC software connection cable must only be used outside the explosion hazardous area. Remove the probe from the process for configuration, and use only the Vaisala accessory PC connection cable to connect the probe to Insight.

Maintenance

The probe filter is the only user-replaceable part in MGP260 probes. For other maintenance requirements, contact Vaisala.

CAUTION! Live maintenance is not allowed.

The content in this chapter is maintained in the following separately tracked document:	
Document ID: M212420EN	Revision: B (16 Nov 2021)

3.3 UK (UKEX) Ex certification information

This chapter contains the Ex certification information (for example, specific conditions of use) related to the UK (UKEX) regional certification.

The Ex certification information is included in *MGP260 Installation and Safety Guide M212764EN* that can be found at the Vaisala documentation portal docs.vaisala.com.

A printed version of the UK (UKEX) specific MGP260 Installation and Safety Guide (M212764EN) is delivered with the probe in UK deliveries.

3.3.1 Using MGP260 series probes in hazardous locations

WARNING! MGP260 series probes have been designed for use in hazardous locations as specified by the product classification. The personnel installing, using, or maintaining MGP260 probes are responsible for determining the appropriate protection concept for the specific application the probe is used in, and that the hazardous area classification of the probe meets the requirements of the application.

WARNING! If the equipment is used in a manner not specified by Vaisala, the protection provided by the equipment may be impaired.

MGP260 probes are certified for use in hazardous areas as defined by the following classifications:

Table 9 MGP260 series hazardous area classifications

Certification	MGP260 classification
UKEX / ATEX / IECEx	Ex II 1/2 (1) G Ex eb mb [ia] IIB T3 Ga/Gb -40 °C ≤ Tamb ≤ +60 °C

CAUTION! The personnel installing, operating, and maintaining MGP260 probes must have the required competencies for working in the hazardous location, as defined by the applicable standards.

For information on the standards that apply to using MGP260 probes based on the classification of the device, see MGP260 certification documentation and the declarations of conformity related to MGP260 probes at www.vaisala.com/declarationofconformity.

3.3.2 Guidelines for safe use in hazardous conditions

Process connection and partition wall

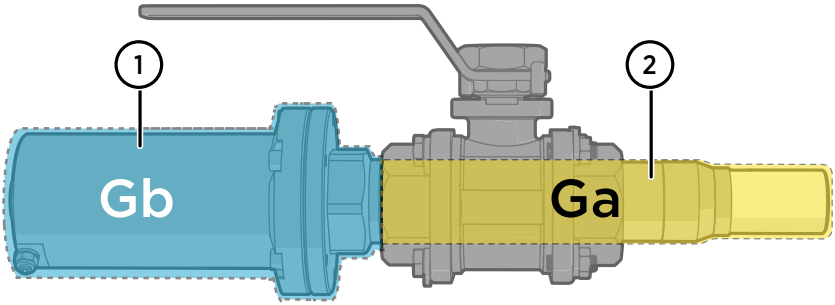

Figure 7 MGP260 Ga/Gb division

1 The part outside of the process (up until to the NPT 1.5″ connection thread) complies with the **Gb** Equipment Protection Level (EPL).
2 The part inside the process (starting from the NPT 1.5″ thread) complies with the **Ga** EPL. The partition wall is made of stainless steel, sapphire glass, and silicone adhesive. The stress limit temperature range of the silicone adhesive is -40 ... +60 °C (-40 ... +140 °F).

WARNING! While installing or uninstalling the device, there is a risk of flammable gas release or flame entrance.

Wiring requirements

- The wiring of the optional intrinsically safe (Ex ia) external pressure or temperature sensor input terminal must be kept separate from the analog output, power supply input, and RS-485 wiring.
  - See the installation overview and installation instructions for more information.
- The cable glands and cables used for wiring the device must not impair the Ex protection.
  - Unused lead-throughs must be sealed using Ex compliant plugs.
- See Table 10 (page 28) for screw terminal requirements.
- Use an 18 ... 30 VDC power supply with the probe.
  - Permitted supply short-circuit current (I_k): 50 A.
  - MGP260 analog outputs must be externally powered.

CAUTION! Connect only de-energized wires. Never switch on the power supply input before completing the wiring and closing the connection box.

Table 10 Screw terminal wiring requirements

Property	Specification
Connection torque	0.5 Nm ... 0.6 Nm
Wire cross section / connection capacity (solid and flexible)	0.2 mm^2 ... 2.5 mm^2 (AWG 24 ... 12)
Stripping length	7 mm (0.27 in)

Intrinsic safety

The overvoltage category of MGP260 series probes is **I** (non-mains equipment), as defined in IEC 60664-1.

MGP260 probes are in conformance with the IEC 60079-11 dielectric strength requirement. For the intrinsic safe IIB output parameters, see Table 11 (page 28).

Table 11 Intrinsic safe IIB output parameters

Parameter	Value
U_o	25.2 V
I_o	78 mA
P_o	0.5 W
U_m	40 V
C_o	820 nF
L_o	20 mH

The parameters listed in Table 11 (page 28) apply when one of the two conditions below is given:

- the total L_i of the external circuit (excluding the cable) is < 1% of the L_o value; or
- the total C_i of the external circuit (excluding the cable) is < 1% of the C_o value.

The parameters are reduced to 50% when both of the two conditions below are given:

- the total L_i of the external circuit (excluding the cable) is ≥1% of the L_o value; and
- the total C_i of the external circuit (excluding the cable) is ≥1% of the C_o value.

Note: the reduced capacitance of the external circuit (including cable) shall not be greater than 1µF for Groups I, IIA, IIB & IIIC, and 600nF for Group IIC.

The values of L_o and C_o determined by this method shall not be exceeded by the sum of all of the L_i plus cable inductances in the circuit and the sum of all of C_i plus cable capacitances, respectively.

Connecting probe to Insight PC software

The Insight PC software connection cable must only be used outside the explosion hazardous area. Remove the probe from the process for configuration, and use only the Vaisala accessory PC connection cable to connect the probe to Insight.

Maintenance

The probe filter is the only user-replaceable part in MGP260 probes. For other maintenance requirements, contact Vaisala.

CAUTION! Live maintenance is not allowed.

The content in this chapter is maintained in the following separately tracked document:	
Document ID: M212763EN	Revision: A (20 Dec 2021)

3.4 Japan (CML) Ex certification information

This chapter contains the Ex certification information (for example, specific conditions of use) related to the MGP260 Ex certification in Japan (CML).

Translations of the certification information are available in the multilingual *MGP260 Installation and Safety Guide M212500EN* that can be found at the Vaisala documentation portal docs.vaisala.com.

A print copy of the Japan (CML) specific MGP260 Installation and Safety Guide (M212500EN) is delivered with the probe in Japan deliveries.

3.4.1 Using MGP260 series probes in hazardous locations

WARNING! MGP260 series probes have been designed for use in hazardous locations as specified by the product classification. The personnel installing, using, or maintaining MGP260 probes are responsible for determining the appropriate protection concept for the specific application the probe is used in, and that the hazardous area classification of the probe meets the requirements of the application.

WARNING! If the equipment is used in a manner not specified by Vaisala, the protection provided by the equipment may be impaired.

MGP260 probes are certified for use in hazardous areas as defined by the following classifications:

Table 12 MGP260 series hazardous area classifications

Certification	MGP260 classification
IECEx (international) ATEX (EU)	Ex II 1/2 (1) G Ex eb mb [ia] IIB T3 Ga/Gb -40 °C ≤ Tamb ≤ +60 °C
MET (US/CAN)	**NEC 500:** Class I, Division 2, Groups C & D; T3 **NEC 505:** Class I, Zone 0, AEx eb mb [ia] IIB T3 Ga/Gb **CSA 60079:** Ex eb mb [ia] IIB T3 Ga/Gb
CML (Japan)	Ex eb mb [ia] IIB T3 Ga/Gb
PCEC (China)	Ex eb mb [ia] IIB T3 Ga/Gb CE19.2461X
KCs (Korea) 인증 : 방호장치 안전인증 고시 2021-22호 인증번호 : 23-KA4BO-0282X	Ex II 1/2 (1) G Ex eb mb [ia] IIB T3 Ga/Gb -40 °C ≤ Tamb ≤ +60 °C IECEx EESF 19.0006X 21-KA4BO-XXXX

CAUTION! The personnel installing, operating, and maintaining MGP260 probes must have the required competencies for working in the hazardous location, as defined by the applicable standards.

For information on the standards that apply to using MGP260 probes based on the classification of the device, see MGP260 certification documentation and the declarations of conformity related to MGP260 probes at www.vaisala.com/declarationofconformity.

3.4.2 Guidelines for safe use in hazardous conditions

Process connection and partition wall

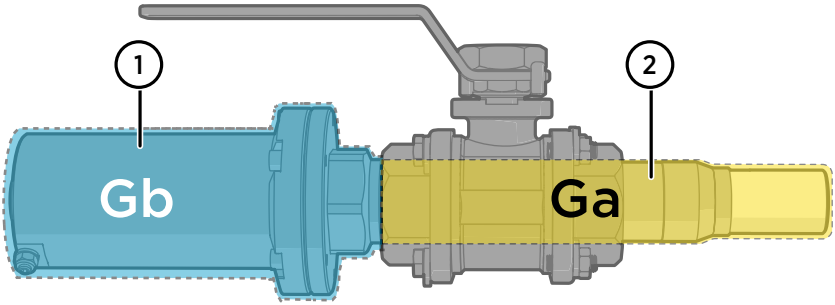

Figure 8 MGP260 Ga/Gb division

1 The part outside of the process (up until to the NPT 1.5″ connection thread) complies with the **Gb** Equipment Protection Level (EPL).
2 The part inside the process (starting from the NPT 1.5″ thread) complies with the **Ga** EPL. The partition wall is made of stainless steel, sapphire glass, and silicone adhesive. The stress limit temperature range of the silicone adhesive is -40 ... +60 °C (-40 ... +140 °F).

WARNING! While installing or uninstalling the device, there is a risk of flammable gas release or flame entrance.

Wiring requirements

- The wiring of the optional intrinsically safe (Ex ia) external pressure or temperature sensor input terminal must be kept separate from the analog output, power supply input, and RS-485 wiring.
  - See the installation overview and installation instructions for more information.
- The cable glands and cables used for wiring the device must not impair the Ex protection.
  - US/CAN: The cables used for wiring must have a flammability rating of UL 2556 VW-1 or equivalent.
  - Unused lead-throughs must be sealed using Ex compliant plugs.
- See Table 13 (page 32) for screw terminal requirements.
- Use an 18 ... 30 VDC power supply with the probe.
  - Permitted supply short-circuit current (I_k): 50 A.
  - US/CAN: only use a UL listed 18 ... 30 VDC (min. 6 W) power supply. The power supply must be UL/CSA 60950-1 certified.
  - MGP260 analog outputs must be externally powered.

CAUTION! Connect only de-energized wires. Never switch on the power supply input before completing the wiring and closing the connection box.

Table 13 Screw terminal wiring requirements

Property	Specification
Connection torque	0.5 Nm ... 0.6 Nm
Wire cross section / connection capacity (solid and flexible)	0.2 mm^2 ... 2.5 mm^2 (AWG 24 ... 12)
Stripping length	7 mm (0.27 in)

Intrinsic safety

The overvoltage category of MGP260 series probes is **I** (non-mains equipment), as defined in IEC 60664-1.

MGP260 probes are in conformance with the IEC 60079-11 dielectric strength requirement. For the intrinsic safe IIB output parameters, see Table 14 (page 32).

Table 14 Intrinsic safe IIB output parameters

Parameter	Value
U_o	25.2 V
I_o	78 mA
P_o	0.5 W
U_m	40 V
C_o	820 nF
L_o	20 mH

The parameters listed in Table 14 (page 32) apply when one of the two conditions below is given:

- the total L_i of the external circuit (excluding the cable) is < 1% of the L_o value; or
- the total C_i of the external circuit (excluding the cable) is < 1% of the C_o value.

The parameters are reduced to 50% when both of the two conditions below are given:

- the total L_i of the external circuit (excluding the cable) is ≥1% of the L_o value; and
- the total C_i of the external circuit (excluding the cable) is ≥1% of the C_o value.

Note: the reduced capacitance of the external circuit (including cable) shall not be greater than 1µF for Groups I, IIA, IIB & IIIC, and 600nF for Group IIC.

The values of L_o and C_o determined by this method shall not be exceeded by the sum of all of the L_i plus cable inductances in the circuit and the sum of all of C_i plus cable capacitances, respectively.

Connecting probe to Insight PC software

The Insight PC software connection cable must only be used outside the explosion hazardous area. Remove the probe from the process for configuration, and use only the Vaisala accessory PC connection cable to connect the probe to Insight.

Maintenance

The probe filter is the only user-replaceable part in MGP260 probes. For other maintenance requirements, contact Vaisala.

CAUTION! Live maintenance is not allowed.

The content in this chapter is maintained in the following separately tracked document:	
Document ID: M212501EN	Revision: B (3-30-2023)

3.5 Korea (KCs) Ex certification information

This chapter contains the Ex certification information (for example, specific conditions of use) related to the Korea (KCs) certification.

Translated Ex certification information is included in the multilingual (EN, KO) *MGP260 Installation and Safety Guide M212970EN* that can be found at the Vaisala documentation portal docs.vaisala.com.

A printed version of the Korea (KCs) specific MGP260 Installation and Safety Guide (M212970EN) is delivered with the probe in Korea (KCs) deliveries.

3.5.1 Using MGP260 series probes in hazardous locations

WARNING! MGP260 series probes have been designed for use in hazardous locations as specified by the product classification. The personnel installing, using, or maintaining MGP260 probes are responsible for determining the appropriate protection concept for the specific application the probe is used in, and that the hazardous area classification of the probe meets the requirements of the application.

WARNING! If the equipment is used in a manner not specified by Vaisala, the protection provided by the equipment may be impaired.

MGP260 probes are certified for use in hazardous areas as defined by the following classifications:

Table 15 MGP260 series hazardous area classifications

Certification	MGP260 classification
IECEx (international) ATEX (EU)	Ex II 1/2 (1) G Ex eb mb [ia] IIB T3 Ga/Gb -40 °C ≤ Tamb ≤ +60 °C
MET (US/CAN)	**NEC 500:** Class I, Division 2, Groups C & D; T3 **NEC 505:** Class I, Zone 0, AEx eb mb [ia] IIB T3 Ga/Gb **CSA 60079:** Ex eb mb [ia] IIB T3 Ga/Gb
CML (Japan)	Ex eb mb [ia] IIB T3 Ga/Gb
KCs (Korea) 인증 : 방호장치 안전인증 고시 2021-22호 인증번호 : 23-KA4BO-0282X	Ex eb mb [ia] IIB T3 Ga/Gb -40 °C ≤ Tamb ≤ +60 °C IECEx EESF 19.0006X 23-KA4BO-0282X

CAUTION! The personnel installing, operating, and maintaining MGP260 probes must have the required competencies for working in the hazardous location, as defined by the applicable standards.

For information on the standards that apply to using MGP260 probes based on the classification of the device, see MGP260 certification documentation and the declarations of conformity related to MGP260 probes at www.vaisala.com/declarationofconformity.

3.5.2 Guidelines for safe use in hazardous conditions

Process connection and partition wall

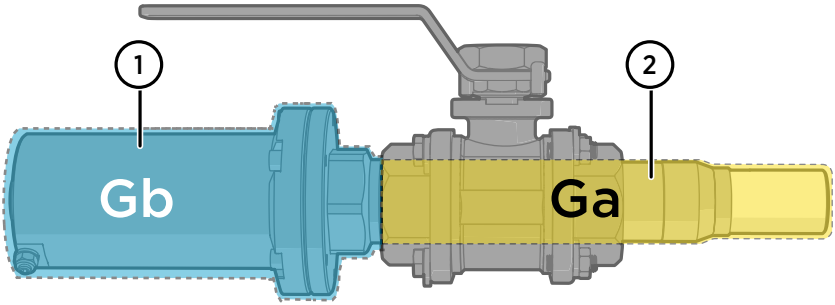

Figure 9 MGP260 Ga/Gb division

1 The part outside of the process (up until to the NPT 1.5″ connection thread) complies with the **Gb** Equipment Protection Level (EPL).
2 The part inside the process (starting from the NPT 1.5″ thread) complies with the **Ga** EPL. The partition wall is made of stainless steel, sapphire glass, and silicone adhesive. The stress limit temperature range of the silicone adhesive is -40 ... +60 °C (-40 ... +140 °F).

WARNING! While installing or uninstalling the device, there is a risk of flammable gas release or flame entrance.

Wiring requirements

- The wiring of the optional intrinsically safe (Ex ia) external pressure or temperature sensor input terminal must be kept separate from the analog output, power supply input, and RS-485 wiring.
  - See the installation overview and installation instructions for more information.
- The cable glands and cables used for wiring the device must not impair the Ex protection.
  - US/CAN: The cables used for wiring must have a flammability rating of UL 2556 VW-1 or equivalent.
  - Unused lead-throughs must be sealed using Ex compliant plugs.
- See Table 16 (page 36) for screw terminal requirements.
- Use an 18–30 V DC power supply with the probe.
  - Permitted supply short-circuit current (I_k): 50 A.
  - US/CAN: only use a UL listed 18–30 V DC (min. 6 W) power supply. The power supply must be UL/CSA 60950-1 certified.
  - MGP260 analog outputs must be externally powered.

CAUTION! Connect only de-energized wires. Never switch on the power supply input before completing the wiring and closing the connection box.

Table 16 Screw terminal wiring requirements

Property	Specification
Connection torque	0.5–0.6 Nm
Wire cross section / connection capacity (solid and flexible)	0.2–2.5 mm^2 (AWG 24–12)
Stripping length	7 mm (0.27 in)

Intrinsic safety

The overvoltage category of MGP260 series probes is **I** (non-mains equipment), as defined in IEC 60664-1.

MGP260 probes are in conformance with the IEC 60079-11 dielectric strength requirement. For the intrinsic safe IIB output parameters, see Table 17 (page 36).

Table 17 Intrinsic safe IIB output parameters

Parameter	Value
U_o	25.2 V
I_o	78 mA
P_o	0.5 W
U_m	40 V
C_o	820 nF
L_o	20 mH

The parameters listed in Table 17 (page 36) apply when one of the two conditions below is given:

- the total L_i of the external circuit (excluding the cable) is < 1% of the L_o value; or
- the total C_i of the external circuit (excluding the cable) is < 1% of the C_o value.

The parameters are reduced to 50% when both of the two conditions below are given:

- the total L_i of the external circuit (excluding the cable) is ≥1% of the L_o value; and
- the total C_i of the external circuit (excluding the cable) is ≥1% of the C_o value.

Note: the reduced capacitance of the external circuit (including cable) shall not be greater than 1µF for Groups I, IIA, IIB & IIIC, and 600nF for Group IIC.

The values of L_o and C_o determined by this method shall not be exceeded by the sum of all of the L_i plus cable inductances in the circuit and the sum of all of C_i plus cable capacitances, respectively.

Connecting probe to Insight PC software

The Insight PC software connection cable must only be used outside the explosion hazardous area. Remove the probe from the process for configuration, and use only the Vaisala accessory PC connection cable to connect the probe to Insight.

Maintenance

The probe filter is the only user-replaceable part in MGP260 probes. For other maintenance requirements, contact Vaisala.

CAUTION! Live maintenance is not allowed.

The content in this chapter is maintained in the following separately tracked document:	
Document ID: M212991EN	Revision: A (10-06-2023)

4. Installation

4.1 Installation overview

MGP260 can be installed either directly into the process (for example, into a threaded port or through a ball valve in the actual process pipeline), or using a flow-through adapter (for example, in a sampling line installation or when performing a field calibration).

For an example of installing MGP260 directly in the process through a threaded port, see Installation option: installation in threaded port (page 39).

For an example of installing MGP260 directly in the process using a ball valve, see Installation option: ball valve installation (page 41).

For an overview of the flow-through adapter installation option, see Installation option: flow-through adapter installation (page 44).

CAUTION! Note that the pressure compensation input must be set up in order to receive accurate measurements. For pressure input options, see Pressure compensation input options (page 46).

Note that when installing MGP260 series probes into pipes with condensing gas, it is typical for the probe to require some time to heat up and recover from condensation. Installing MGP260 series probes into pipes with condensing gas and intermittent flow is not recommended.

4.1.1 NPT 1.5″ thread test plug 257525SP

CAUTION! The correct thread type in which to install MGP260 is **1.5″ female NPT**. Installing into any other thread type can damage the equipment and compromise the leak tightness of the connection. If unsure, verify the thread type with the NPT 1.5″ thread test plug.

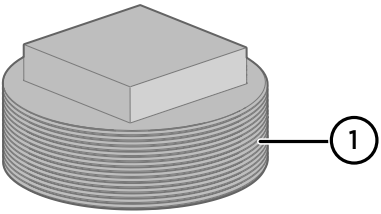

Figure 10 NPT 1.5″ thread test plug

1 NPT 1.5″ male thread (same as on MGP260 connector)

MGP260 comes shipped with an NPT 1.5″ male thread test plug (Vaisala order code: 257525SP). If you are uncertain about the thread type of the process connector you want to install MGP260 into, use the thread test plug to check that it fits into the process connector threads (that is, that the process connector thread type is **NPT 1.5″ female**).

More information

- Inserting probe into process and opening connection box (page 48)

4.1.2 Installation preparations

Before starting the installation, check the following:

- Make sure that your installation site suits the Ex classification of the probe: for classification information relevant to your region, see Regional Ex certification overview (page 21).
  - Review the hazardous area information relevant to the Ex certification in your region and make sure that the conditions for safe use are met.
- Review the wiring diagram (Figure 17 (page 52)) for power supply requirements: MGP260 probes require a dedicated 18–30 V DC power supply. Note that in addition to the power supply input for the probe, each analog output must be externally powered.
- Review the information in Pressure compensation input options (page 46) and make sure that you are using a pressure compensation input source that matches the settings of your MGP260 probe.
- Inspect the probe for any possible damage or dirt that could compromise the leak tightness of the device (for example, bent or punctured parts of the probe body, or dirt that prevents the connection box from closing fully).
- When selecting the cable glands and plugs for your application, make sure they are Ex compliant.
- If you install MGP260 to the process using a ball valve, note that it is necessary to use a 2″ ball valve and a reducer in order to accommodate the probe head (diameter 1.57″).
- Note that installing MGP260 series probes into pipes with condensing gas and intermittent flow is not recommended. When the probe is installed into a pipe with condensing gas, it is typical for the probe to require some time to heat up and recover from condensation.

The NPT threads of the probe can have sharp edges. To avoid injury when touching the threads, wear protective gloves.

The probe can cause a foot injury if dropped. To avoid foot injuries, wear protective shoes.

4.1.3 Installation option: installation in threaded port

Figure 11 (page 40) shows an example of installing MGP260 in a threded port on the process pipeline. The figure highlights the correct wiring routes and shows the recommended installation depth and orientation.

An external pressure measurement instrument (item **5**) is shown as an example of pressure compensation input options. For a description of alternative pressure compensation options, see Pressure compensation input options (page 46) .

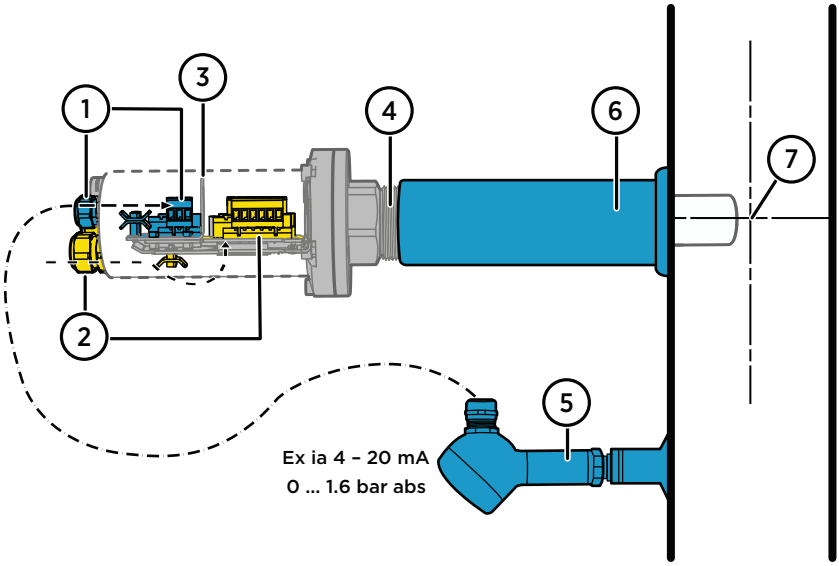

Figure 11 MGP260 threaded port installation example with wiring routes and recommended orientation and depth

1 External pressure or temperature sensor input wiring (Ex ia): use the M16x1.5 lead-through and route the cable directly to the terminal.
2 Standard analog output, power supply input, and RS-485 communication wiring: use the M20x1.5 lead-throughs and route the cables to the terminals through the openings below the component board.
3 Metal barrier separating the intrinsically safe external sensor input terminals (optional, for environmental compensation input) from the analog output, power supply input, and RS-485 terminals on the component board.
4 1.5″ male NPT thread on MGP260: **never install to any other thread type than 1.5″ female NPT**.
5 Example pressure compensation input option: an external measurement instrument connected to the MGP260 Ex ia input terminals (item **1**).
6 Threaded installation port with 1.5″ female NPT thread on the process pipe.
7 For best results, install MGP260 horizontally. The recommended position for the tip of the filter is within 1/3 of the pipe's diameter from the pipe centerline. If this is not achievable, other positions inside the pipe can be used as well. In smaller pipes, the installation depth can be adjusted by using an adapter such as a ball valve.

CAUTION! Always use a separate cable for the external pressure or temperature sensor input (Ex ia) wiring (1), and make sure the wiring remains separated from the terminals and wiring (2) on the other side of the metal barrier (3) on the component board.

4.1.4 Installation option: ball valve installation

Figure 12 (page 42) shows an example MGP260 ball valve installation. The figure highlights the correct wiring routes and shows the recommended installation depth and orientation.

An external pressure measurement instrument (item **5**) is shown as an example of pressure compensation input options. For a description of alternative pressure compensation options, see Pressure compensation input options (page 46) .

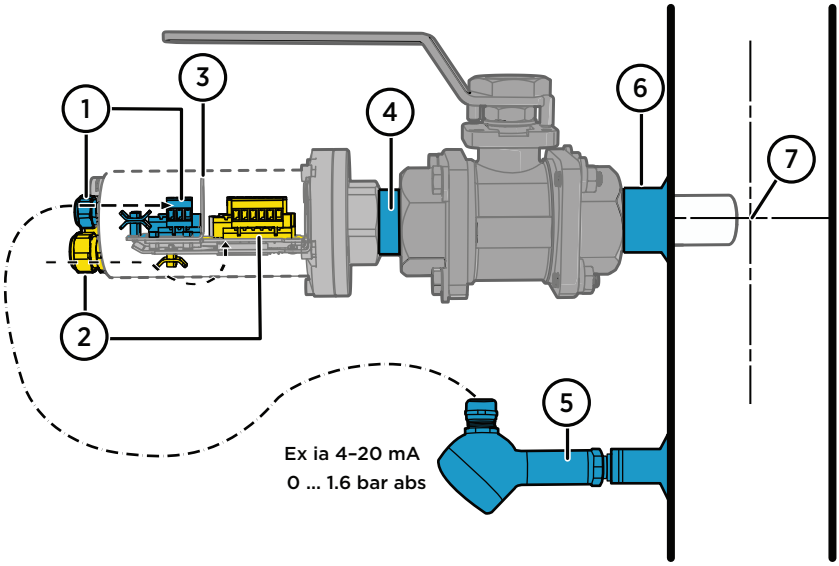

Figure 12 MGP260 ball valve installation example with wiring routes and recommended orientation and depth

1 External pressure or temperature sensor input wiring (Ex ia): use the M16x1.5 lead-through and route the cable directly to the terminal.
2 Standard analog output, power supply input, and RS-485 communication wiring: use the M20x1.5 lead-throughs and route the cables to the terminals through the openings below the component board.
3 Metal barrier separating the intrinsically safe external sensor input terminals (optional, for environmental compensation input) from the analog output, power supply input, and RS-485 terminals on the component board.
4 1.5″ male NPT thread on MGP260: **never install to any other thread type than 1.5″ female NPT**. Note that when installing through a ball valve, it is necessary to use a 2″ ball valve with a 1.5″ thread reducer in order to accommodate the probe head (diameter 1.57″).
5 Example pressure compensation input option: an external measurement instrument connected to the MGP260 Ex ia input terminals (item **1**).
6 Threaded stub welded to the pipe wall for ball valve process connection.
7 For best results, install MGP260 horizontally. The recommended position for the tip of the filter is within 1/3 of the pipe's diameter from the pipe centerline. If this is not achievable, other positions inside the pipe can be used as well. In smaller pipes, the installation depth can be adjusted by using an adapter such as the ball valve in this example.

Note that when using a ball valve to install MGP260, it is necessary to use a 2″ ball valve and a reducer in order to accommodate the probe head (diameter 1.57″).

CAUTION! Always use a separate cable for the external pressure or temperature sensor input (Ex ia) wiring (1), and make sure the wiring remains separated from the terminals and wiring (2) on the other side of the metal barrier (3) on the component board.

More information

- Recommended installation position on pipeline (page 45)

4.1.5 Installation option: flow-through adapter installation

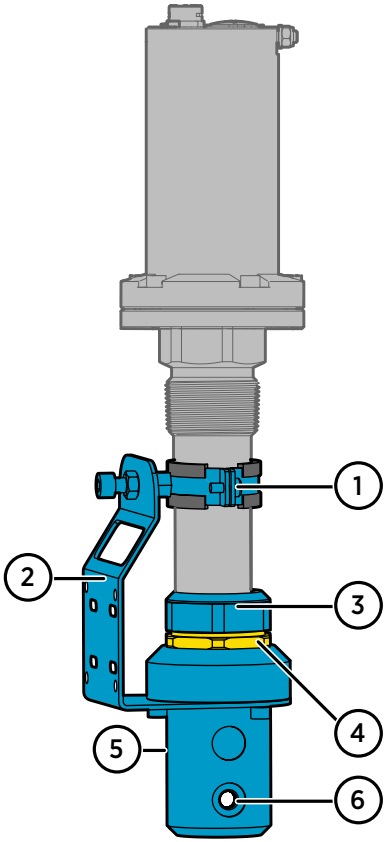

Figure 13 (page 44) shows MGP260 attached into the MGP260 flow-through adapter accessory (Vaisala order code: 258877). For instructions on attaching MGP260 to the flow-through adapter, see Attaching flow-through adapter to MGP260 (page 53).

For an example of connecting a pressure input instrument, see Figure 12 (page 42).

Figure 13 MGP260 in flow-through adapter 258877

1 Clamp with 2 screws
2 Mounting plate (attach to mounting surface with screws or ties)
3 Probe gland tightening nut
4 Probe gland locknut: **do not turn**
5 Gas tube inlet port, G 1/8 (on the other side of the adapter)
6 Gas tube outlet port, G 1/8

More information

- Attaching flow-through adapter to MGP260 (page 53)
- Flow-through adapter dimensions (page 92)

4.1.6 MGP260 dimensions

Figure 14 (page 45) shows the MGP260 dimensions.

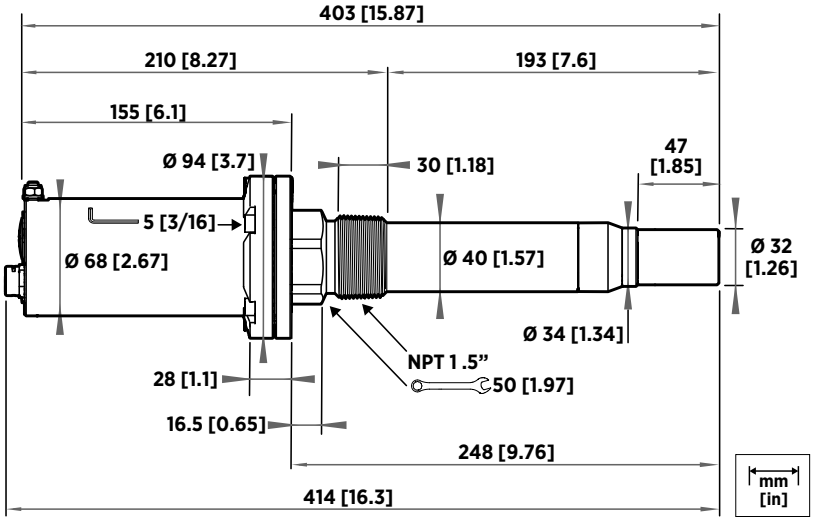

Figure 14 MGP260 dimensions in millimeters and inches

4.1.7 Recommended installation position on pipeline

Figure 15 (page 45) shows the recommended installation position for MGP260. Install the probe in a straight run of pipeline, ≥ 5 pipe diameters downstream of the closest bend or other feature affecting gas flow, and ≥ 2 pipe diameters upstream to the next bend or similar feature. For best results, use the orientation and installation depth shown in Figure 12 (page 42).

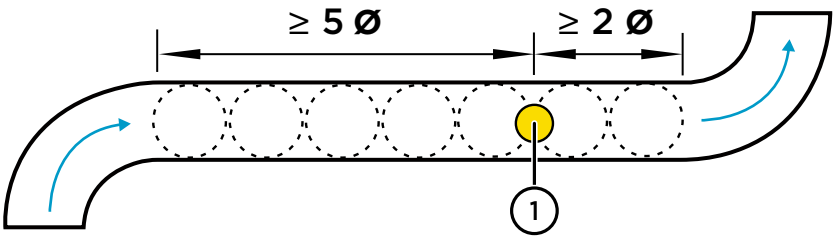

Figure 15 Recommended MGP260 installation position on pipeline

1 Recommended MGP260 probe installation position on pipeline.

4.1.8 Gas safety during installation

WARNING! While installing or uninstalling the device, there is a risk of flammable gas release or flame entrance.

WARNING! Exposure to hazardous gases (for example, hydrogen sulfide (H_2S)) is possible when installing or removing the probe from the process.

- Always follow local safety guidelines. Ensure that the work area is safe and meets local regulations (for example, related to ventilation and personal protective equipment).
- Use a personal gas detector to monitor the safety of the area you are working in.
- After installation, use a gas detector to ensure that process connections are leak-free.

CAUTION! To avoid compromising the leak tightness of the installation:

- Ensure that the thread type of the installation port is 1.5″ female NPT. If unsure, verify the thread type with the 1.5″ NPT thread test plug.
- Apply PTFE tape to the 1.5″ male NPT thread of the probe as instructed in Preparing probe for installation (page 47), and make sure that the PTFE tape seal has not been damaged by rotating the probe open (counter-clockwise) in the installation port.

4.1.9 Pressure compensation input options

Accurate measurement readings require compensating for the pressure of the measured process. MGP260 series probes do not measure pressure, meaning that it is mandatory to set up a pressure compensation input source. The following pressure input options are available:

- Pressure measurement received from an external pressure measurement instrument through the Ex ia (4–20 mA) input terminals on the MGP260 component board. This is the recommended option: for an example, see Figure 12 (page 42). The wiring of the external pressure instrument input is shown in Figure 17 (page 52).

  Note that the Ex ia input of the MGP260 series probes is internally powered and isolated. Compatible Ex ia pressure instruments can be directly connected to the MGP260 input terminal.

  - The external pressure instrument connected to MGP260 must output 4–20 mA and use absolute pressure units. The default range for the input is 1 ... 1.6 bar(a).
- Pressure measurement received from a Modbus master through a serial line connection.
- If the process pressure is constant, a fixed pressure compensation value can be configured into use.

The pressure compensation input settings (for example, input type selection and input scaling) of MGP260 must match the pressure input source used in your application. For more information and configuration instructions on pressure compensation, see Environmental compensation overview (page 66).

4.2 Preparing probe for installation

The following tools are required when installing:
- Adjustable wrench (or a similar suitable tool) for turning the tightening nut
- 5 mm (3/16 in) Allen key for tightening flange
- 2.5 mm (3/32 in) Allen key for strain relief clamps
- Input and output cables for wiring
- Cable glands and plugs for unused lead-throughs
- Small slotted screwdriver for screw terminals
- PTFE tape (wide) for the probe threads

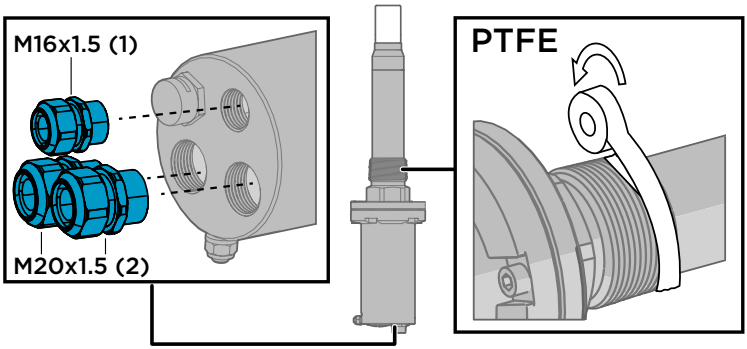

1. Attach cable glands (not provided by Vaisala) to the wiring lead-throughs as required. Note the cable gland requirements applicable in your region (see Regional Ex certification overview (page 21)). For more information on lead-through options, see Lead-through options and breather plug (page 16).
   - Use an M16x1.5 gland for the optional external sensor input wiring (Ex ia).
   - Use 1 or 2 M20x1.5 glands for wiring the 4 ... 20 mA analog output, power supply input and RS-485 terminals (as required in your application).
   - Seal unused lead-throughs using Ex compliant seals.
2. Apply PTFE tape on the probe threads.
   - Inspect the threads and remove any possible dirt.
   - Wrap 2-3 revolutions of tape in the direction of the thread spiral, starting from the first thread. Keep the edge of tape parallel to the face of the thread while wrapping.
   - Do not tape beyond the edge of the threads or leave loose tape hanging.

4.3 Inserting probe into process and opening connection box

CAUTION! The correct thread type in which to install MGP260 is **1.5″ female NPT**. Installing into any other thread type can damage the equipment and compromise the leak tightness of the connection. If unsure, verify the thread type with the NPT 1.5″ thread test plug.

Note that when using a ball valve to install MGP260, it is necessary to use a 2″ ball valve and a reducer in order to accommodate the probe head (diameter 1.57″).

1. Insert the probe into the **1.5″ female NPT** installation port and rotate it clockwise until it sits firmly in the port. Do not tighten the probe to full tightness, only enough to keep it securely in place when wiring.

   An external pressure measurement instrument is shown here as an example of pressure compensation input options: for a description of alternative options, see Pressure compensation input options (page 46).

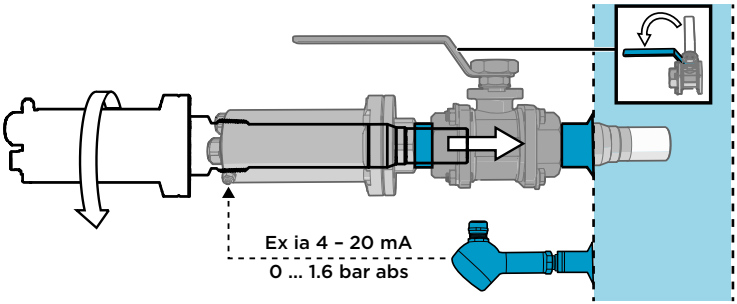

CAUTION! Rotating the probe open (counter-clockwise) after it has been installed into the port can tear the PTFE tape. Only adjust the position of the probe in the installation port by tightening (rotating clockwise).

2. Open the captive screws on the connection box flange with a 5 mm (3/16 in) Allen key. After loosening the captive screws, pull the connection box cover off to access the wiring terminals.

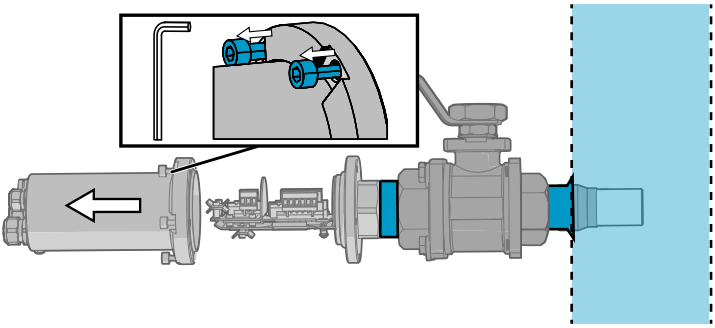

If necessary, use a wrench to hold the probe in place by gripping the tightening nut.

3. Pull the connection box cover open to access the wiring terminals.

4.4 Wiring

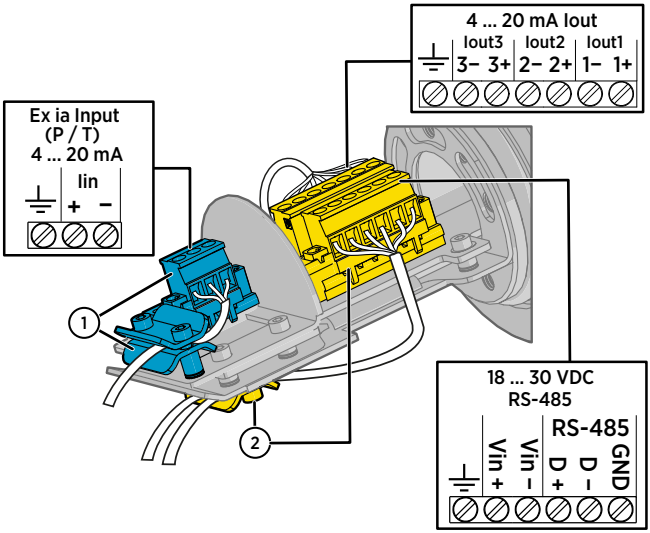

Figure 16 MGP260 screw terminal markings and cable routes

CAUTION! The Ex ia external sensor input wiring (**1**) must be kept separate from the analog output, power supply, and RS-485 wiring (**2**). Always use separate cables on each side of the metal barrier.

CAUTION! Connect only de-energized wires. Never switch on the power supply input before completing the wiring and closing the connection box.

1. Connect the input, output, and power supply wiring as required in your application. Figure 17 (page 52) shows an example of wiring the device when all inputs and outputs are used.
   - **1**: External pressure or temperature sensor input wiring (Ex ia): route the cable to the terminal through the M16x1.5 lead-through and through the strain relief cable clamp above the component board.
   - **2**: Analog output, power supply input and RS-485 wiring: route the cables to the terminals through the M20x1.5 lead-throughs (1 or 2) and through the strain relief cable clamp below the component board.
   - After connecting the wiring, adjust cable length and fasten the cables with the strain relief clamps.

2. See Finalizing installation (page 53) for instructions on attaching grounding to the probe grounding terminal.

4.4.1 Wiring diagram

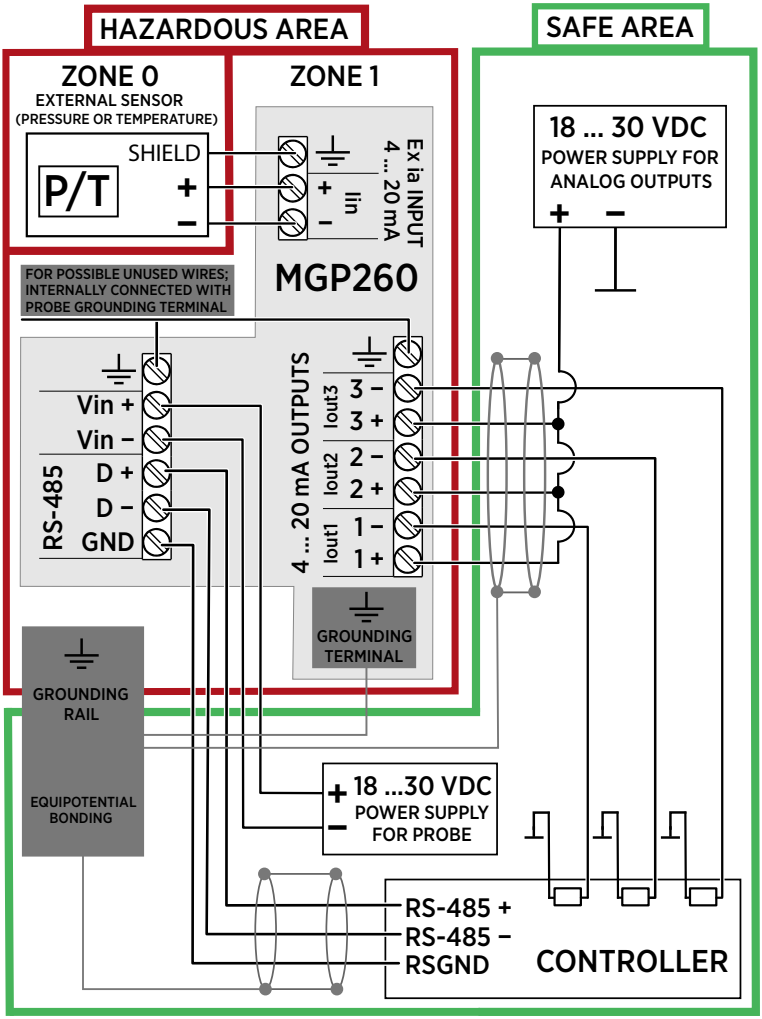

Note: Power supply for probe is required for either analog or digital outputs.

Figure 17 MGP260 wiring diagram

4.5 Finalizing installation

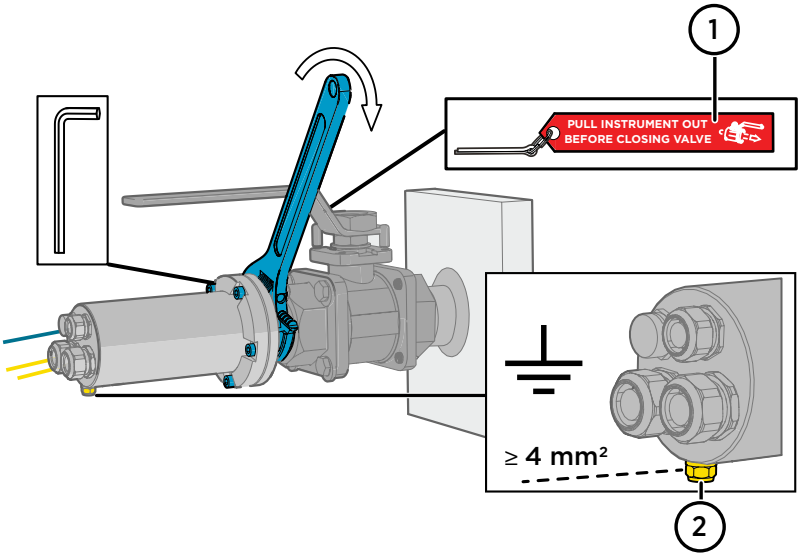

1 Safety pin: in ball valve installations, lock the handle of the ball valve in the open position with the safety pin to prevent damage caused by closing the valve with the instrument inside.
2 Probe grounding terminal.

1. Close the connection box and tighten the captive Allen screws on the connection box flange. Tighten the cable glands, and then tighten the probe to final tightness on the installation port by turning the tightening nut with a 50 mm (1.97 in) wrench.
2. Connect the MGP260 grounding terminal to the grounding rail of the installation site with a $\geq$ 4 mm^2 wire.
3. **Ball valve installations only:** lock the handle of the ball valve in the open position with the safety pin.
4. When done, switch on the power supply input.

4.6 Attaching flow-through adapter to MGP260

The MGP260 flow-through adapter 258877 is delivered assembled and is intended to be used with the probe installed in an upright position. For an overview of the flow-through adapter, see Installation option: flow-through adapter installation (page 44).

To attach the adapter to MGP260:

1. Loosen the 2 screws on the clamp.

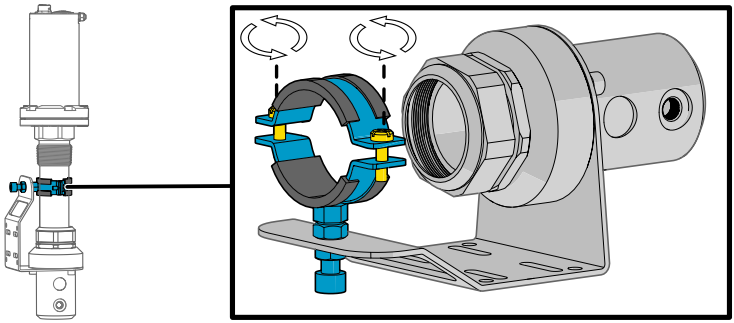

2. Loosen the probe gland.

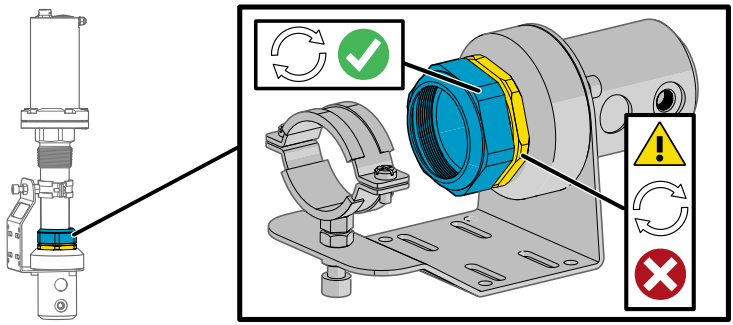

CAUTION! Only rotate the tightening nut of the probe gland. Never turn from the locknut of the probe gland (below the tightening nut). The threads of the locknut are glued onto the adapter with a sealant, and rotating the locknut will compromise the leak tightness of the adapter.

3. Insert the probe head into the adapter through the clamp and probe gland. Push the probe into the adapter until the shoulder of the probe head meets the slot inside the adapter and stops. The probe filter should cover both the inlet and outlet ports from the inside. Check the installation depth measurement as shown in Figure 31 (page 92).
4. Tighten the probe gland.

5. After tightening the probe gland, tighten the 2 screws on the clamp.

> **WARNING!** A high process pressure can cause the probe to detach from the adapter if the clamp and gland have been left loose. Always fully tighten the clamp and probe gland.

6. Attach the mounting plate to the mounting surface with screws or ties. For mounting plate dimensions, see Figure 32 (page 93).
7. Check that the probe sits closely in the clamps after mounting. The mounting kit and the flow-through adapter have been aligned so that the probe sits in the adapter in a straight angle. A gap between the probe body and clamp indicates that the mounting alignment is incorrect and must be adjusted.

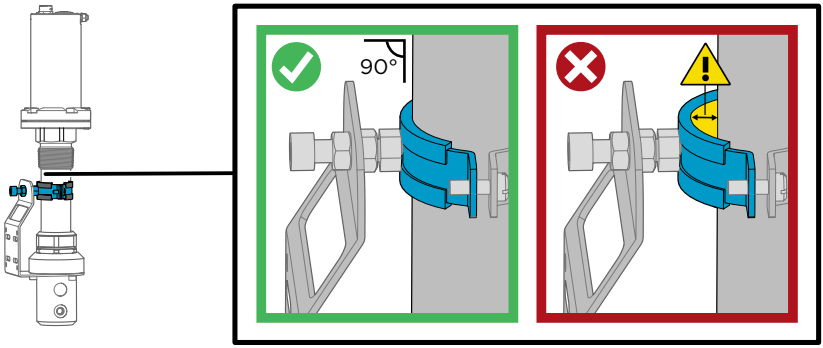

> **CAUTION!** Ensure the adapter mounting does not pull the probe out of a straight angle. If the mounting pulls the probe to the side, the leak tightness of the gland O-ring can be affected.

8. Connect the gas inlet tube to the upper port of the adapter and the gas outlet tube to the lower port. Adapter port size: G 1/8.

More information

- Installation option: flow-through adapter installation (page 44)
- Flow-through adapter dimensions (page 92)

5. Operating with Insight software

5.1 Vaisala Insight PC software

Vaisala Insight PC software is a configuration software for Indigo-compatible probes and other supported devices. Insight is available for Microsoft Windows® operating systems (64-bit only).

With the Insight software, you can:

- See device information and status.
- See real-time measurement data.
- Configure serial communication settings, analog input and output parameters and scaling, and environmental compensations.
- Calibrate and adjust the device.

Download Insight at www.vaisala.com/insight.

The probe can be connected to Vaisala Insight software using a Vaisala USB cable (item code 257295).

More information

- Connecting to Insight software (page 57)
- Insight main view (page 59)
- Configuring Modbus communication settings with Insight (page 61)
- Configuring analog outputs with Insight (page 63)
- Configuring environmental compensations with Insight (page 68)
- Calibration and adjustment with Insight PC software (page 77)

5.1.1 Basic and Advanced user modes

You can switch between the **Basic mode** and **Advanced mode** user modes in the **Settings** menu.

Depending on the connected device, switching to **Advanced mode** may provide access to additional configuration options. Use these options only as described in the product documentation or as instructed by Vaisala support.

More information

- Insight main view (page 59)

5.2 Connecting to Insight software

CAUTION! When connecting several devices at the same time, note that your computer may not be able to supply enough power through its USB ports. Use an externally powered USB hub that can supply >2 W for each port.

- Computer with Vaisala Insight software installed
- USB connection cable (no. 257295)
- Small flat head screwdriver for opening the screw terminal block screws

CAUTION! The Insight PC software connection cable must be used only outside the explosion hazardous area. Remove the probe from the process for configuration, and use only the Vaisala accessory PC connection cable 257295 to connect the probe to Insight.

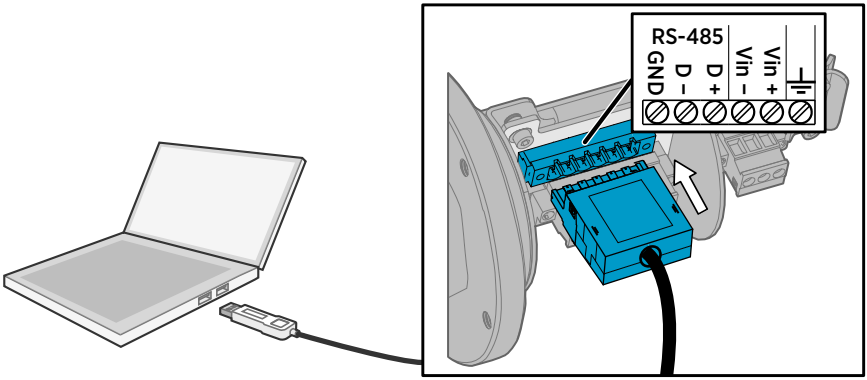

Figure 18 Connecting probe to Insight

1. Open the Insight software on your PC.
2. Connect the USB cable to a free USB port on the PC.
3. Open the MGP260 connection box.
4. Unscrew the 6-pin screw terminal block on the MGP260 component board and lift the block out.
5. Plug the USB cable into the open port as shown in the illustration.
6. Wait for Insight software to detect the probe.

More information

- Installing the driver for the USB service cable (page 58)
- Removing probe from process (page 84)

5.2.1 Installing the driver for the USB service cable

Only Windows® operating systems are supported by the driver of the USB service cable.

1. Connect the USB service cable to a USB port on your computer. Windows® detects the new device and installs the appropriate driver.
2. Open **Devices and Printers** from the Windows® Start menu. Use search to find it if necessary (search for "devices").
3. Locate the cable in the list of devices:
   - If the device is listed as **Vaisala USB Device** with a COM port number in brackets, the cable is ready for use. Take note of the COM port number for later use.
   - If the device is listed as **Vaisala USB Instrument Cable** without a COM port number listed, you must install the driver manually.

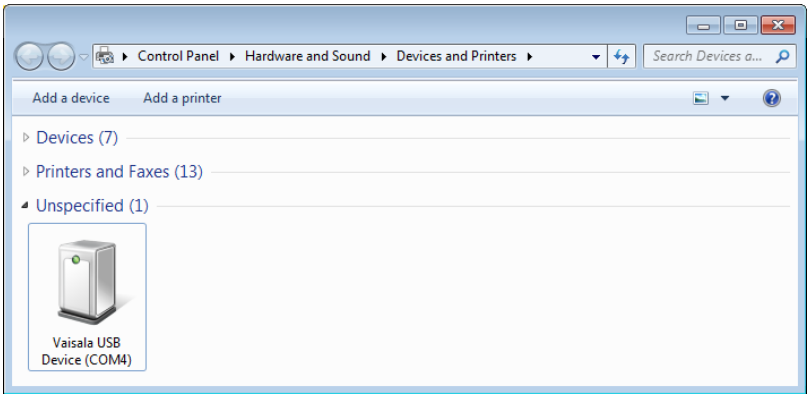

4. To install the driver manually:
   a. Disconnect the USB service cable from the computer.
   b. Download the Vaisala USB driver at www.vaisala.com/software (search and select the appropriate USB Instrument Driver Setup for your cable).
   c. Run the USB driver installation program *`Vaisala USB Device Driver Setup.exe`*. Accept the installation defaults.
   d. Go back to step 1 and verify that the driver installation works as expected.

5.3 Insight main view

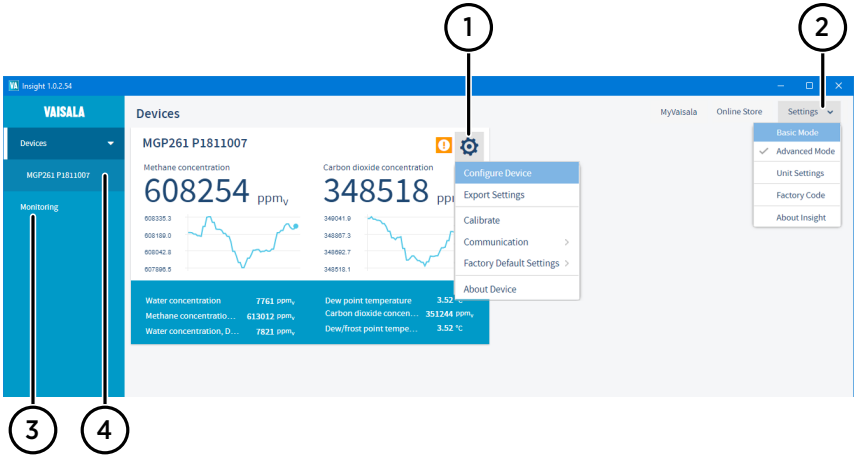

Figure 19 Insight main menu and settings

1 Select ⚙ to access Insight main menu.
   - **Configure Device**: environmental compensation settings, analog input and output settings, Modbus configuration, error limits and general settings.
   - **Export Settings**: creates a text file export of the device settings.
   - **Calibrate**: options for calibrating and adjusting methane, carbon dioxide, and water vapor output, viewing adjustment data, and restoring factory adjustments.
   - **Communication**: contains a quick access selection for restarting the device.
   - **Factory default settings**: restores the probe back to default settings, clears any user adjustments, and restores the latest factory calibration.
   - **About Device**: general device information such as serial number and software version.
2 Select **Settings** to switch between the **Basic Mode** and **Advanced Mode** user modes, change the units of parameters (metric/non-metric), enter a factory code to access restricted functionalities, or view information about the Insight software.
3 **Monitoring** provides options for monitoring and recording selected parameters, and exporting the monitoring data as a CSV (comma-separated values) file.
4 Device information menu with the following tabs:
   - **Measurements**: measurement graph view with parameter drop-down selection.
   - **Calibration information**: read-only information about the latest stored calibration.
   - **Diagnostics**: troubleshooting and administrative information about the device status. Also includes an option to export the device error log as a text file. When contacting Vaisala support, it is recommended to include an up-to-date export of the error log with the support request.

6. Modbus

The probe can be accessed using the Modbus serial communication protocol. The supported Modbus variant is Modbus RTU (Serial Modbus) over RS-485 interface.

The pre-configured default Modbus serial settings are presented in the following table. Modbus communication settings can also be configured using Vaisala Insight PC software.

For a description of MGP260 Modbus registers, see Modbus registers (page 96).

Table 18 Default Modbus serial communication settings

Description	Default value
Serial bit rate	19200
Parity	N
Number of data bits	8
Number of stop bits	2
Modbus device address	240

More information

- Configuring Modbus communication settings with Insight (page 61)
- Modbus registers (page 96)

6.1 Configuring Modbus communication settings with Insight

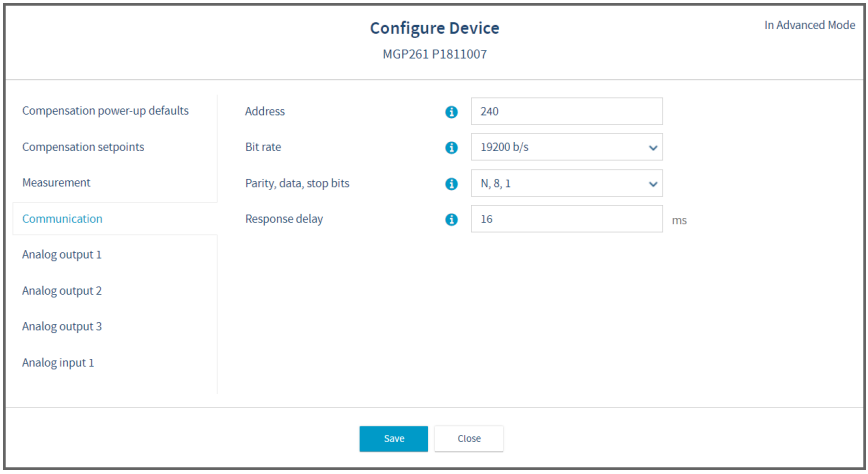

Figure 20 Modbus communication settings in Insight PC software

You can configure the following Modbus communication settings with Insight PC software:

- Device address
- Communication bit rate
- Parity, data bits, and stop bits
- Response delay

To configure the Modbus communication settings with Insight:

1. Connect to Insight and select ⚙ **> Configure Device > Communication**.
2. Enter the communication values as needed: see the instructions in the Insight interface for allowed ranges and additional information.
3. Select **Save** to store the settings.

More information

- Connecting to Insight software (page 57)

7. Analog output configuration

7.1 Analog output configuration overview

MGP260 series probes have 3 scalable 4 ... 20 mA analog output channels. Each output has the following configuration options:

- Output parameter selection
- Output scale low end and high end
- Clipping and error limits
- Error output level

The configuration of the outputs (output parameter selection and scaling) is selected when ordering the probe, and can be changed with Modbus or Vaisala Insight PC software.

7.1.1 Default parameter configuration of output channels

By default, the analog output channels of MGP260 probes have been set to the parameter configuration shown in Table 19 (page 62).

Table 19

MGP260 analog output channel	Default parameter
Channel 1 (CH1)	Methane (CH_4)
Channel 2 (CH2)	Carbon dioxide (CO_2)
Channel 3 (CH3)	**MGP261**: water concentration (H_2O) **MGP262**: by default, CH3 output is disabled.

You can change the configuration of the analog outputs with Vaisala Insight PC software or Modbus. For instructions, see Configuring analog outputs with Insight (page 63) and Configuring analog outputs with Modbus (page 62).

7.2 Configuring analog outputs with Modbus

The Modbus implementation of MGP260 series probes includes configuration registers for analog output measurement parameter selection, scaling, and error output level.

For a description of MGP260 Modbus registers, see Modbus registers (page 96).

7.3 Configuring analog outputs with Insight

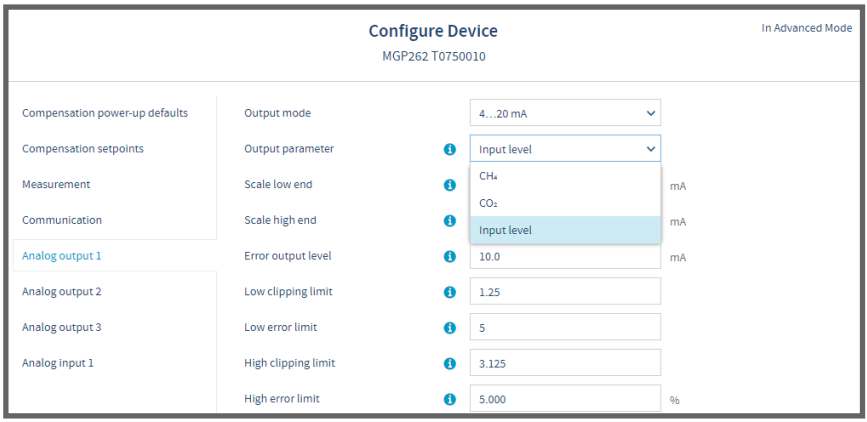

Figure 21 Analog output configuration options in Insight (MGP262 example)

You can configure the measurement parameter sent on each analog output, the scaling of the parameter, clipping and error limits, and the error output level. All 3 outputs have the same configuration options.

In addition to measurement parameter output, you can also configure an analog output to send the current value (mA) of the analog input channel.

1. Connect to Insight (see Connecting to Insight software (page 57)).
2. Select ⚙ **> Configure device**, and then one of the 3 analog outputs.
3. Select the measurement parameter that is sent on the output channel you are configuring, set the scaling for the output, define clipping and error limits, and set the output level that indicates an error.
4. Store the selections with **Save** and exit with **Close**.
5. Repeat the configuration for each output (analog outputs 1, 2, and 3) as required.

More information

- Wet basis and dry basis measurement parameters (page 64)

7.4 Changing units in Insight

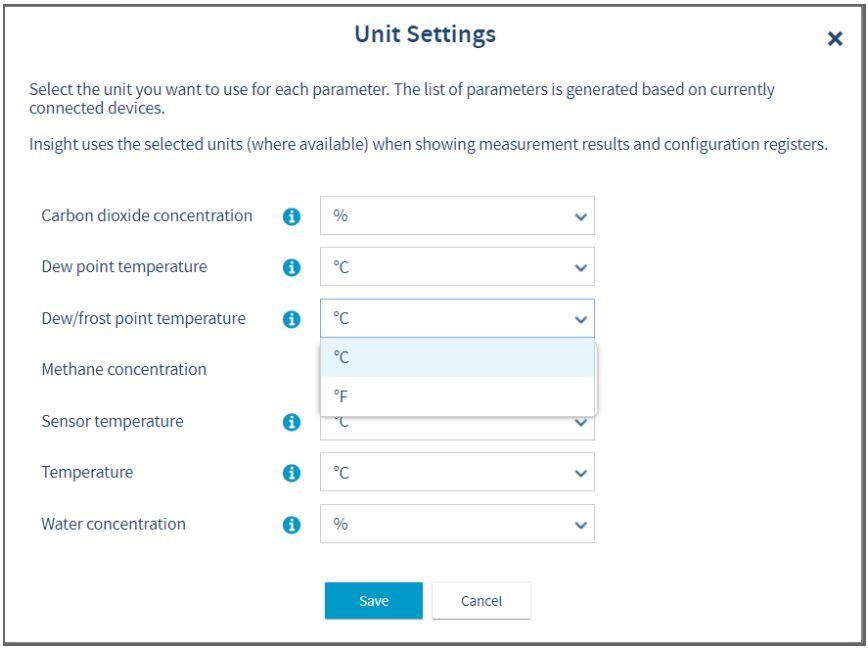

Figure 22 Unit selection in Insight

You can change the units of parameters (for example, metric or non-metric temperature) in the **Unit settings** menu in Insight.

1. Connect to Insight (see Connecting to Insight software (page 57)).
2. In the **Settings** dropdown menu (upper right corner of the main view), select **Unit settings**.
3. Select the units for the parameters and store the selections with **Save**.

7.5 Wet basis and dry basis measurement parameters

MGP261 methane, carbon dioxide, and water vapor measurements can be shown either as wet basis or dry basis values. The wet basis / dry basis measurement output selection is made when ordering the probe, and can be configured with Vaisala Insight PC software or Modbus.

The following formula shows the conversion between wet basis and dry basis values.

$$X(dry) = \frac{X(wet)}{100\,\% \ - \ H_2O}$$

where:

X(dry)	gas concentration (dry basis) (%)
X(wet)	gas concentration (wet basis) (%)
H_2O	gas concentration (wet basis) (%)

8. Environmental compensation

8.1 Environmental compensation overview

When necessary, environmental compensations can be applied to improve the measurement accuracy (for example, to provide the probe with a real-time pressure reading from the measurement environment by using input from an external sensor).

The probe can compensate for the effects of the following parameters:
- Temperature (°C)
- Pressure (hPa)

Environmental compensation parameters can be provided to the probe from the following sources:
- The internal temperature sensor of the probe can be used for temperature compensation.
- An external sensor can be connected to the probe (4–20 mA analog input, Ex ia) to provide temperature or pressure compensation values. Note the external pressure sensor requirements listed in Pressure compensation input options (page 46).
- If the temperature and pressure values are known and remain constant, they can be entered as fixed setpoint values.
- If the probe is integrated in a system that measures either temperature or pressure, they can be updated to the probe continuously.

The method used for environmental compensation is configured on the order form when ordering the probe, and can later be updated using Vaisala Insight PC software or Modbus protocol.

8.1.1 Temperature compensation

MGP260 can measure the approximate temperature of the CARBOCAP® sensor for compensation, use a fixed setpoint value as the temperature compensation, or receive the temperature compensation value from an external temperature sensor.

Unless a dedicated temperature measurement is available and can be regularly updated to the probe, it is strongly recommended to use the probe's internal temperature compensation to ensure real-time accurate measurements. If the measurement is made in a constant temperature, the constant temperature can be set as the compensation value (fixed setpoint option).

8.1.2 Pressure compensation

The probe does not have on-board pressure measurement. You can either configure a fixed setpoint value that is used as the pressure compensation, or set the probe to receive the pressure compensation value from an external pressure sensor.

CAUTION! Note that the pressure compensation input must be set up in order to receive accurate measurements. For pressure input options, see Pressure compensation input options (page 46).

For pressure compensation, the recommended option is to receive the pressure measurement from an external pressure measurement instrument through the Ex ia (4–20 mA) input terminals on the MGP260 component board.

When using an external pressure sensor to provide the pressure compensation values to MGP260, note the following requirements:

- The external pressure instrument connected to MGP260 must output 4–20 mA and use absolute pressure units. The default range for the input is 1 ... 1.6 bar(a).
- The analog input settings of MGP260 must be configured to match with the connected external pressure instrument. For instructions on configuring the MGP260 analog input settings with Vaisala Insight PC software, see Configuring environmental compensations with Insight (page 68) and Configuring input from external analog pressure or temperature sensor (page 71).

8.1.3 Compensation mode during calibration

When you start to calibrate the probe with Insight, the probe enters calibration mode, and the compensation mode is automatically switched to **Setpoint**. In this compensation mode, you must enter the conditions of your calibration environment as temporary setpoint values in the **Compensation setpoints** tab of the calibration menu.

When you exit calibration mode, the values you have entered in the **Compensation setpoints** tab remain in use as the current setpoint values, but the compensation mode switches back to the selection that was in place before starting calibration (either **Off**, **Setpoint**, **Measured**, or **External**).

More information

- Configuring environmental compensations with Insight (page 68)

8.2 Configuring environmental compensations with Modbus

The Modbus implementation of MGP260 includes configuration registers for pressure and temperature compensation setpoints. You can also configure the temperature and pressure compensation mode (**External**, **Setpoint**, **Measured** (temperature only), or **Off**).

For a description of MGP260 Modbus registers, see Modbus registers (page 96).

More information

- Modbus (page 60)
- Modbus registers (page 96)

8.3 Configuring environmental compensations with Insight

Using Insight, you can configure the following temperature and pressure compensation settings:

- Temperature or pressure compensation mode (select the source where the compensation value is received from)
- The setpoint values for temperature or pressure compensation
- The scaling of the analog input channel (**Analog input 1**) that is used to receive temperature or pressure values from an external sensor.

Figure 23 (page 69) describes the different environmental compensation selections in Insight.

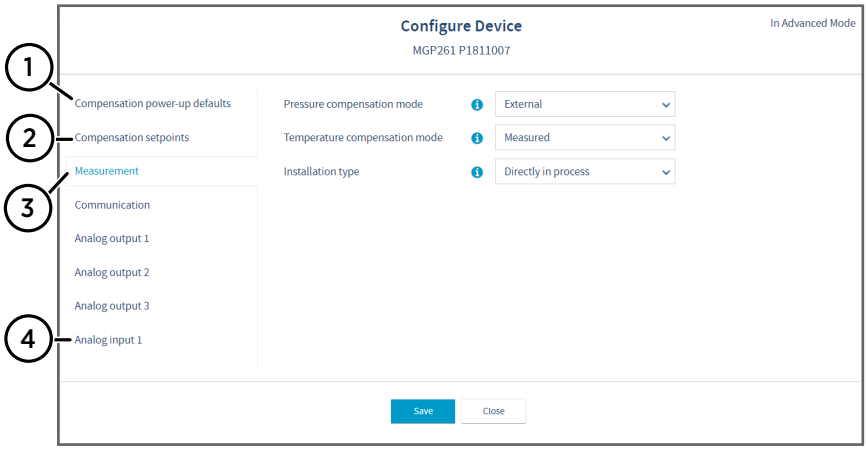

Figure 23 **Measurement** menu view in Insight PC software

1 **Compensation power-up defaults**: configure the setpoint compensation values that are taken into use at device reset. Used when the temperature or pressure compensation mode is set as **Setpoint**.
2 **Compensation setpoints**: configure the temporary setpoint compensation values that are in use while the device is powered on, but revert back to power-up defaults when the device is reset. Used when the temperature or pressure compensation mode is set as **Setpoint**.
3 **Measurement** (shown in figure): configure the pressure and temperature compensation modes (available options: **Setpoint**, **External**, **Measured** (temperature only), and **Off**.
4 **Analog input 1**: configure the input from the external pressure or temperature sensor (used when the pressure or temperature compensation mode is set as **External**).

The external pressure instrument connected to MGP260 must output 4–20 mA and use absolute pressure units. The default range for the input is 1 ... 1.6 bar(a). Note that the pressure unit used in Insight is hPa. The default input scale for the external pressure instrument is 0 ... 1.6 bar(a), which corresponds to 0 ... 1600 hPa.

1. Connect to Insight (see Connecting to Insight software (page 57)).
2. Select ⚙ **> Configure Device**.
3. Select one of the compensation modes in the **Measurement** menu.

4. See the separate instructions for configuring the compensations in each compensation mode:
   - Configuring setpoint values for compensations with Insight (page 70)
   - Using probe measurement as temperature compensation (page 70)
   - Using compensation received from external temperature or pressure sensor (page 71)
   - Configuring input from external analog pressure or temperature sensor (page 71)

More information

- Compensation mode during calibration (page 67)

8.3.1 Configuring setpoint values for compensations with Insight

To configure a fixed setpoint value for pressure or temperature compensation in Insight:

1. Select ⚙ > **Configure Device**.
2. Open the **Measurement** menu, set the compensation mode of the compensation parameter (temperature, pressure, or both) as **Setpoint** from the mode selection dropdown list, and select **Save** when done.
3. Open the **Compensation setpoints** menu, enter the setpoint value in the text field, and select **Save** when done.

   Note that the setpoint value you enter in the **Compensation setpoints** is temporary and resets back to the power-up default at device reset.

4. Optional: If you want to keep the setpoint value in use also after device reset, enter the same value in the **Compensation power-up defaults** menu and store the setting by selecting **Save**.

8.3.2 Using probe measurement as temperature compensation

To set the internal temperature measurement of the probe as the temperature compensation source:

1. Select ⚙ > **Configure Device**.
2. Open the **Measurement** menu.
3. Select **Measured** from the **Temperature compensation mode** dropdown list, and then select **Save**.

8.3.3 Using compensation received from external temperature or pressure sensor

If you have connected an external pressure or temperature sensor to the 4–20 mA Ex ia analog input channel of MGP260 (see Wiring (page 50)), you can use the measurement received from the sensor as the environmental compensation.

> You can receive the compensation value from an external sensor for only one parameter (temperature or pressure) at a time.

To use an external sensor for temperature or pressure compensation:

1. Select ⚙ **> Configure Device**.
2. Open the **Measurement** menu.
3. Select **External** from either the **Pressure compensation mode** or the **Temperature compensation mode** dropdown list, and then select **Save**.
4. Open the **Analog input 1** menu and configure the scaling of the external sensor input. See Configuring input from external analog pressure or temperature sensor (page 71).

> The external pressure instrument connected to MGP260 must output 4–20 mA and use absolute pressure units. The default range for the input is 1 ... 1.6 bar(a). Note that the pressure unit used in Insight is hPa. The default input scale for the external pressure instrument is 0 ... 1.6 bar(a), which corresponds to 0 ... 1600 hPa.

8.3.4 Configuring input from external analog pressure or temperature sensor

When you set either the **Temperature compensation mode** or **Pressure compensation mode** to use measurement from an **External** sensor, you can configure the scale of the external sensor input in the **Analog input 1** menu.

The **Input mode** and **Input parameter** selections are set automatically based on the external compensation parameter selection.

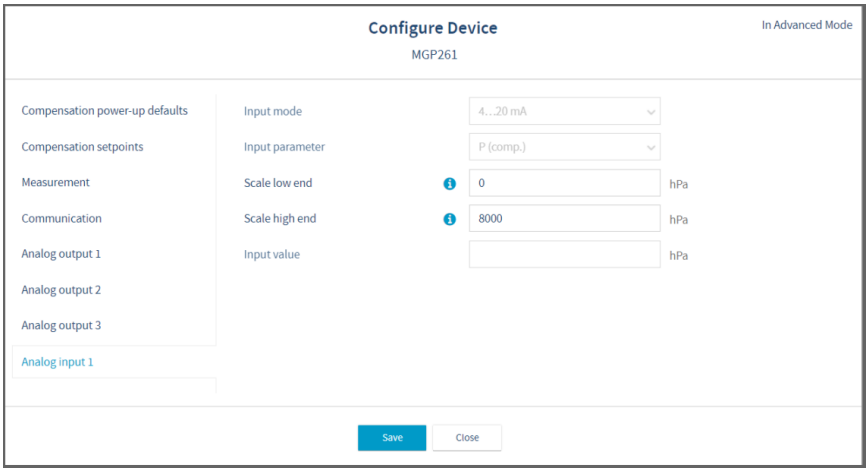

Figure 24 Analog input 1 configuration menu in Insight

1. In the **Measurement** menu, set either the pressure or temperature compensation mode as **External** to use input from a connected sensor. See Using compensation received from external temperature or pressure sensor (page 71).

> You can receive the compensation value from an external sensor for only one parameter (temperature or pressure) at a time.

2. Store the setting with **Save**.
3. In the **Analog input 1** menu, enter the scaling for the temperature or pressure input from the external sensor.

> The external pressure instrument connected to MGP260 must output 4–20 mA and use absolute pressure units. The default range for the input is 1 ... 1.6 bar(a). Note that the pressure unit used in Insight is hPa. The default input scale for the external pressure instrument is 0 ... 1.6 bar(a), which corresponds to 0 ... 1600 hPa.

4. Store the setting with **Save**.

8.3.5 Sending analog input channel value from an analog output channel

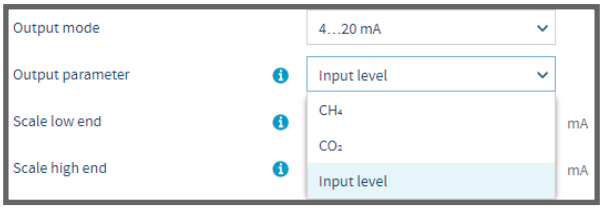

Figure 25 Input level selection in Insight analog output configuration options (MGP262 example)

In addition to measurement parameter output, you can also configure an analog output to send the current value (mA) of the analog input channel.

1. Connect to Insight (see Connecting to Insight software (page 57)).
2. Select ⚙ **> Configure device**, and then one of the 3 analog outputs.
3. Select **Input level** from the **Output parameter** dropdown.
4. Store the selection with **Save** and exit with **Close**.
5. Repeat the configuration for each output (analog outputs 1, 2, and 3) as required.

9. Calibration

9.1 Calibration recommendations

The recommended calibration interval for MGP260 probes is 1 year.

To reach the best calibration and adjustment accuracy, it is recommended to use the traceable calibration and adjustment services provided by Vaisala. For an overview of the available calibration options, see Calibration overview (page 74).

9.2 Calibration overview

The methane (CH_4) and carbon dioxide (CO_2) measurements of MGP260 can be calibrated and adjusted using gas references with known values. You can also calibrate and adjust the probe's internal temperature measurement (used for environmental compensation only). The H_2O measurement can only be adjusted at the low end (simultaneously with CH_4 and CO_2 when a zero point adjustment is made).

Note that H_2O selections apply only to MGP261. When calibrating and adjusting MGP262, the Insight interface options include only MGP262 parameters.

Carrying out calibrations and adjustments requires connecting MGP260 to Vaisala Insight PC software (requires Vaisala USB cable 257295). For instructions on connecting the probe to Insight, see Connecting to Insight software (page 57).

To feed reference gases to MGP260 in a controlled manner when calibrating and adjusting, use a flow-through adapter. An MGP260 flow-through adapter is available as an optional accessory: for more information, see Flow-through adapter (page 75).

WARNING! Before removing the probe from the process for calibration and adjustment, review the instructions in Removing probe from process (page 84).

The following calibration and adjustment options are available when the probe is connected to Vaisala Insight PC software:

- Methane (CH_4) and carbon dioxide (CO_2) measurement calibration and adjustment (1-point or 2-point adjustments).
- Temperature measurement adjustment (probe's internal sensor measurement used only for environmental compensation).
- Zero point adjustment for all gas measurement parameters (CH_4, CO_2, and H_2O: adjusts all parameters simultaneously). Zero point adjustment replaces the low end adjustment of all gas parameters in 2-point adjustments.
- Reset to factory adjustment (given separately for each parameter).

The accuracy of field calibration and adjustment is dependent on a number of factors such as sufficient stabilization time, calibration setup conditions, and reference quality. To ensure fully accurate calibration and adjustment results, use the traceable calibration and adjustment services provided by Vaisala.

More information

- Connecting to Insight software (page 57)
- Flow-through adapter (page 75)
- Removing probe from process (page 84)

9.2.1 Compensation mode during calibration

When you start to calibrate the probe with Insight, the probe enters calibration mode, and the compensation mode is automatically switched to **Setpoint**. In this compensation mode, you must enter the conditions of your calibration environment as temporary setpoint values in the **Compensation setpoints** tab of the calibration menu.

When you exit calibration mode, the values you have entered in the **Compensation setpoints** tab remain in use as the current setpoint values, but the compensation mode switches back to the selection that was in place before starting calibration (either **Off**, **Setpoint**, **Measured**, or **External**).

More information

- Configuring environmental compensations with Insight (page 68)

9.2.2 Flow-through adapter

The MGP260 flow-through adapter (Vaisala order code: 258877) is used in sampling line installations and field calibration and adjustment to achieve a controlled flow of gas to the probe.

The flow-through adapter is delivered assembled with a mounting clamp, mounting plate, and a gland for attaching the probe to the adapter. Figure 26 (page 76) shows the main parts of the flow-through adapter and mounting kit.

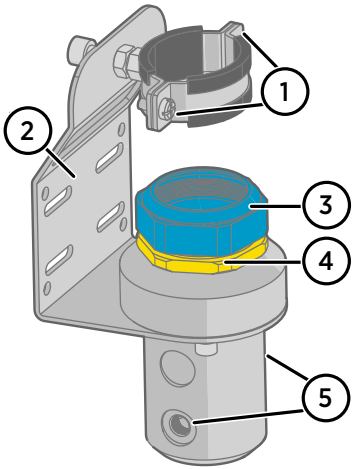

Figure 26 Flow-through adapter 258877

1 Probe clamp (industrial M8, 38 - 44 mm, insulated) and tightening screws
2 Mounting plate for screw or cable mounting
3 Probe gland (M50/9x1.5, 37 - 42 mm) tightening nut for inserting and removing the probe: **only open and tighten from the tightening nut**
4 Probe gland locknut: locked to the threads with Loctite threadlocker, **do not rotate**
5 Gas tube inlet and outlet ports (G 1/8) on opposite sides of the adapter body

For instructions on attaching the flow-through adapter, see Attaching flow-through adapter to MGP260 (page 53).

More information

- Installation option: flow-through adapter installation (page 44)
- Attaching flow-through adapter to MGP260 (page 53)
- Flow-through adapter dimensions (page 92)

9.3 Calibration and adjustment with Insight PC software

Figure 23 (page 69) describes the calibration and adjustment selections in Insight.

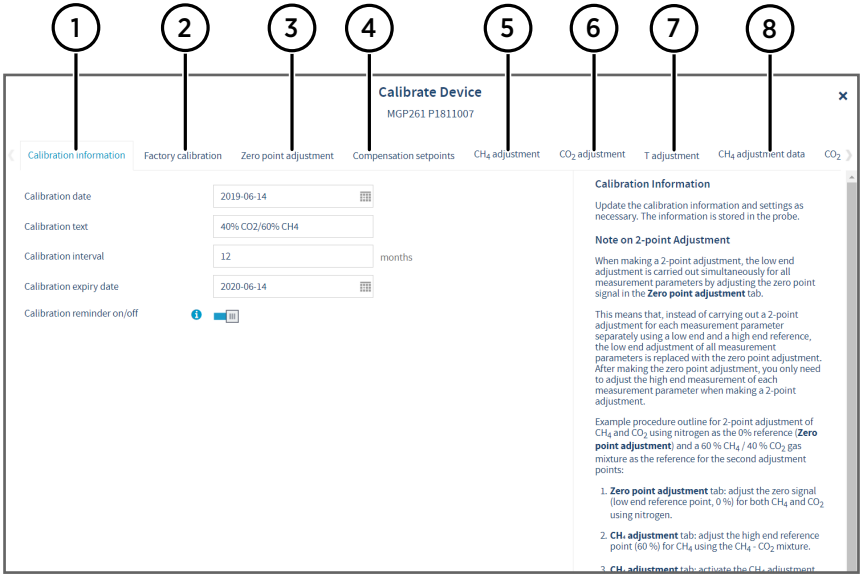

Figure 27 Calibration menu view in Insight PC software

1 Calibration information: enter information about the latest calibration (date, text description) in this tab. Also includes the calibration interval and calibration reminder selections.
2 Factory calibration: shows read-only information about the factory calibration.
3 Zero point adjustment: adjusts the zero point signal (simultaneously for all gas measurement parameters). This adjustment replaces the low end adjustment in 2-point adjustments.
4 Compensation setpoint configuration for the calibration and adjustment environment.
5 Methane (CH_4) measurement adjustment tab. In 2-point adjustments, use this tab for high end adjustment and the zero point adjustment for low end adjustment.
6 Carbon dioxide (CO_2) measurement adjustment tab. In 2-point adjustments, use this tab for high end adjustment and the zero point adjustment for low end adjustment.
7 Temperature measurement adjustment tab.
8 Adjustment data tabs show the latest stored adjustment for each parameter. Use the scroll arrows next to the menu tabs on the left and right edge of the view to view all tabs.

1. Connect to Insight (see Connecting to Insight software (page 57)),

2. Select ⚙ **> Calibrate > Yes**.
3. Select one of the adjustment options in the **Calibrate** menu and see the separate instructions for each option.

9.3.1 Example: 2-point adjustment with zero point adjustment

When making a 2-point adjustment, the low end adjustment is carried out simultaneously for all measurement parameters by adjusting the zero point signal in the **Zero point adjustment** tab.

This means that, instead of carrying out a 2-point adjustment for each measurement parameter separately using a low end and a high end reference, the low end adjustment of all measurement parameters is replaced with the zero point adjustment. After making the zero point adjustment, you only need to adjust the high end measurement of each measurement parameter when making a 2-point adjustment.

Example procedure outline for 2-point adjustment of CH_4 and CO_2 using nitrogen as the 0% reference (**Zero point adjustment**) and a 60 % CH_4 / 40 % CO_2 gas mixture as the reference for the second adjustment points:

1. **Zero point adjustment** tab: adjust the zero signal (low end reference point, 0 %) for both CH_4 and CO_2 using nitrogen.
2. **CH_4 adjustment** tab: adjust the high end reference point (60 %) for CH_4 using the CH_4 - CO_2 mixture.
3. **CH_4 adjustment** tab: activate the CH_4 adjustment.
4. **CO_2 adjustment** tab: adjust the high end reference point (40 %) for CO_2 using the CH_4 - CO_2 mixture.
5. **CO_2 adjustment** tab: activate the CO_2 adjustment.

> The reference gas concentration examples presented here apply to MGP261. When calibrating and adjusting MGP262, refer to the Insight PC software help text instructions for MGP262-specific information.

9.3.2 Zero point adjustment

The zero point adjustment adjusts the zero output signal of the probe and applies simultaneously to all gas measurement parameters (CH_4, CO_2, and H_2O,). This means that, instead of carrying out a 2-point adjustment for each gas measurement parameter separately using a low end and high end reference, the low end adjustment of all gas measurement parameters is replaced with the zero point adjustment.

After carrying out the zero point adjustment, you only need to adjust the high end measurement of each gas measurement parameter when carrying out a 2-point adjustment.

Always use nitrogen as the reference gas for the zero point adjustment.

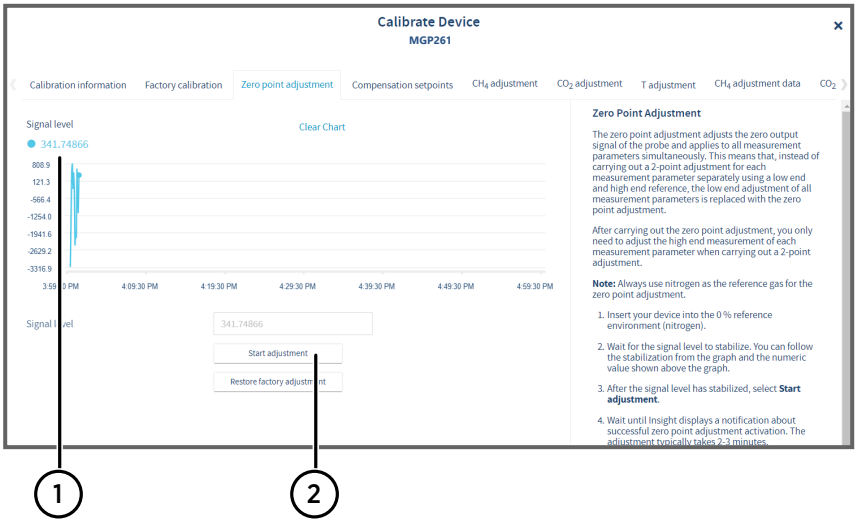

Figure 28 Zero point adjustment tab

1 Follow the signal stabilization from the graph and the numeric value shown above the graph.
2 After the signal has stabilized, select **Start adjustment** and wait for the notification message about successful zero point adjustment activation. The adjustment is saved automatically.

1. Insert your device into the 0 % reference environment (nitrogen).
2. Wait for the signal level to stabilize. You can follow the stabilization from the graph and the numeric value shown above the graph.
3. After the signal level has stabilized, select **Start adjustment**.
4. Wait until Insight displays a notification about successful zero point adjustment activation. The adjustment typically takes 2-3 minutes.
5. The zero point adjustment is saved automatically after it has been successfully activated. To remove an incorrect adjustment, select **Restore factory adjustment**.
6. For a 2-point adjustment, carry out the high end adjustments for each measurement parameter in the separate adjustment tabs using appropriate references (for example, a 60 % CH_4 / 40 % CO_2 gas mixture).

The reference gas concentration examples presented here apply to MGP261. When calibrating and adjusting MGP262, refer to the Insight PC software help text instructions for MGP262-specific information.

9.3.3 Calibrating and adjusting methane (CH_4) measurement

Prepare the calibration gases required to create the reference condition for the adjustment, and the setup for controlled calibration gas feed to the probe.

When making a 2-point adjustment, first carry out the zero signal adjustment in the **Zero point adjustment** tab. The zero signal adjustment replaces the low end adjustment in a 2-point adjustment.

1. Reset any possible existing adjustments with the **Restore factory adjustment** button. This prevents earlier adjustments from having an effect on the current adjustment.
2. Insert your device in the reference environment.
3. Before starting the adjustment, make sure that your environmental compensation settings are correct for your present environment. You can review and change the settings for pressure and temperature compensation setpoints in the **Compensation setpoints** tab.
4. Wait for the measurement (shown in the graph) to stabilize fully.
5. When the measurement has stabilized, click the **Reference value, point 1** text box and enter the known CH_4 level of the calibration point. Press **ENTER** or click outside the text box when done.
6. Check that the measured value for point 1 is automatically inserted.
7. Check the difference between the reference and the measured value. Very large differences may be due to insufficient stabilization time or unsuitable calibration setup.
   a. If you want to apply the adjustment you have made, select **Activate adjustment**.
   b. To exit without taking the adjustment in use, select **Close**.
8. After completing the adjustment, update the information in the **Calibration information** tab.

9.3.4 Calibrating and adjusting carbon dioxide (CO_2) measurement

Prepare the calibration gases required to create the reference condition for the adjustment, and the setup for controlled calibration gas feed to the probe.

When making a 2-point adjustment, first carry out the zero signal adjustment in the **Zero point adjustment** tab. The zero signal adjustment replaces the low end adjustment in a 2-point adjustment.

1. Reset any possible existing adjustments with the **Restore factory adjustment** button. This prevents earlier adjustments from having an effect on the current adjustment.
2. Insert your device in the reference environment.
3. Before starting the adjustment, make sure that your environmental compensation settings are correct for your present environment. You can review and change the settings for pressure and temperature compensation setpoints in the **Compensation setpoints** tab.
4. Wait for the measurement (shown in the graph) to stabilize fully.
5. When the measurement has stabilized, click the **Reference value, point 1** text box and enter the known CO_2 level of the calibration point. Press **ENTER** or click outside the text box when done.
6. Check that the measured value for point 1 is automatically inserted.
7. Check the difference between the reference and the measured value. Very large differences may be due to insufficient stabilization time or unsuitable calibration setup.
   a. If you want to apply the adjustment you have made, select **Activate adjustment**.
   b. To exit without taking the adjustment in use, select **Close**.
8. After completing the adjustment, update the information in the **Calibration information** tab.

9.3.5 Calibrating and adjusting temperature measurement

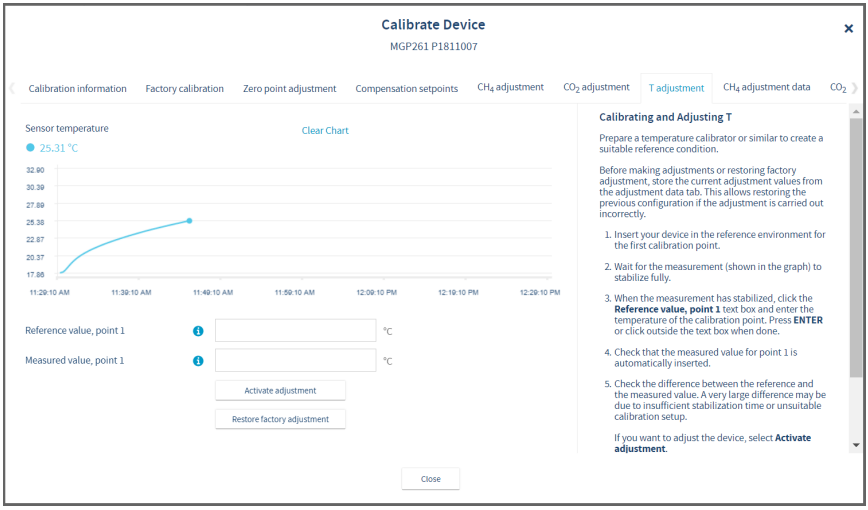

Figure 29 Temperature adjustment view in Insight

Prepare a temperature calibrator or similar to create a suitable reference condition.

You can adjust temperature either in nitrogen or in air.

1. Insert your device in the reference environment.
2. Wait for the measurement (shown in the graph) to stabilize fully.
3. When the measurement has stabilized, click the **Reference value, point 1** text box and enter the known temperature of the calibration point. Press **ENTER** or click outside the text box when done.
4. Check that the measured value for point 1 is automatically inserted.
5. Check the difference between the reference and the measured value. Very large differences may be due to insufficient stabilization time or unsuitable calibration setup.
   a. If you want to apply the adjustment you have made, select **Activate adjustment**.
   b. To exit without taking the adjustment in use, select **Close**.
6. After completing the adjustment, update the information in the **Calibration information** tab.

10. Maintenance

10.1 Maintenance overview

If the probe requires maintenance due to damage or malfunction (for example, if the probe is dropped or bent), contact Vaisala technical support for instructions.

CAUTION! The probe filter is the only user-replaceable part in MGP260 probes. Do not carry out maintenance or repairs without contacting Vaisala technical support.

CAUTION! If you suspect that the probe may have been damaged, for example, after being dropped, always inspect the condition of the sensor package window. If the window is visibly broken, the probe must not be used.

If the probe needs to be sent to Vaisala for maintenance or repairs, see the following instructions:

- Removing probe from process (page 84)
- Cleaning the probe (page 85)
- Sending probe to Vaisala (page 86)

The recommended calibration interval for MGP260 probes is 1 year. For information on calibration and adjustment options, see Calibration overview (page 74).

10.2 Filter change

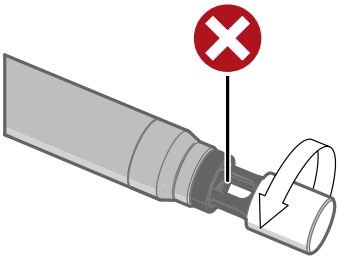

Figure 30 Replacing filter

Replacement filters are available from Vaisala (order code: DRW249919SP). Remove the filter by rotating counter-clockwise.

CAUTION! Do not touch the optical surfaces inside the measurement cuvette when replacing the filter.

The probe filter is the only user-replaceable part in MGP260. For other maintenance requirements, contact Vaisala.

10.3 Removing probe from process

WARNING! When installed in situ, the surface of the probe is in direct contact with the biogas process. Bacteria, viruses, or fungi can be carried from the process on the probe surface.

- Always wear appropriate personal protective equipment when handling items that have been in contact with the biogas process. Follow local regulations and site-specific guidelines.
- Ensure the area where you place the probe after removing it from the process is suitable for working with items that have been in contact with the biogas process.

WARNING! While installing or uninstalling the device, there is a risk of flammable gas release or flame entrance.

WARNING! Exposure to hazardous gases (for example, hydrogen sulfide (H_2S)) is possible when installing or removing MGP260 from the process.

- Always follow local safety guidelines. Ensure that the work area is safe and meets local regulations (for example, related to ventilation and personal protective equipment).
- Use a personal gas detector to monitor the safety of the area you are working in.
- After installing or removing the probe, use a gas detector to ensure that process connections are leak-free.

1. Prepare an area where you can place the probe after removing it from the process.
   a. Clear other items and equipment away from the area.
   b. Cover surfaces around the area with protective material as necessary.
2. Switch off the probe power supply input.

3. If necessary, open the connection box and remove the wiring cables. See Inserting probe into process and opening connection box (page 48).
   a. Hold the probe in place by gripping the tightening nut with a wrench. Then open the connection box by turning the cover counter-clockwise with the connection box key.
   b. Loosen the cable glands and pull the connection box open.
   c. Open the screw terminals inside the connection box with a small screwdriver and remove the wiring cables.
   d. Close the connection box.
4. Rotate the tightening nut of the probe counter-clockwise with a wrench to release the probe. See Inserting probe into process and opening connection box (page 48).

> **CAUTION!** The PTFE tape seal on the probe threads will tear when you rotate the probe open, and must be replaced when reinstalling the probe.

5. Pull the probe out of the process connection and place it on the area you prepared for handling the probe. Hold the probe from the connection box when handling it, and avoid touching the parts that have been inserted into the process.

> Use a cloth or similar to prevent dripping when pulling out the probe.

6. **Ball valve installations only**: remove the safety pin that locks the handle of the ball valve in the open position and close the ball valve.
7. Clean the probe as instructed in Cleaning the probe (page 85) and move the probe to a clean area for further handling.
8. When reinstalling the probe, repeat the installation steps starting from Preparing probe for installation (page 47).

10.4 Cleaning the probe

> **WARNING!** Removing the probe from the process can expose you to biological and chemical hazards due to the nature of the biogas process environment. Review the warnings and instructions listed in Removing probe from process (page 84).

- Moist cloth for wiping the probe
- Running water
- Standard cleaning agents can be used in cleaning

1. Prepare an area for cleaning the probe.
2. To remove the probe from process, follow the instructions in Removing probe from process (page 84).
3. Clean the probe with running water and a cloth. Standard cleaning agents can be used.

CAUTION! Do not clean the probe with a pressure washer.

CAUTION! Do not immerse the probe in liquid to clean it.

4. To install the probe back into the process after cleaning, follow the installation instructions starting from Preparing probe for installation (page 47).
5. If you are sending the probe to Vaisala for maintenance, allow it to dry fully before packing it. See the instructions in Sending probe to Vaisala (page 86).

10.5 Sending probe to Vaisala

If you need to return the probe for maintenance or replacement, contact Vaisala technical support.

CAUTION! Do not ship the probe to Vaisala without contacting technical support. Technical support will provide you with return authorization and up-to-date shipping instructions.

1. Read the warranty information.
2. Contact Vaisala technical support and request a Return Material Authorization (RMA) and shipping instructions.

For information on product warranties, technical support, and repair services, see www.vaisala.com/support.

Always request the RMA before returning any material to Vaisala.

3. Follow the return instructions received from Vaisala technical support. When packing the probe for shipping, ensure that you use sufficient padding, the probe has dried completely after cleaning, and that the probe is tightly sealed in a plastic bag.

11. Technical data

11.1 Specifications

MGP261 measurement performance

Table 20 Measurement performance

Property	Methane CH_4	Carbon dioxide CO_2	Water vapor H_2O
Sensor	CARBOCAP®	CARBOCAP®	CARBOCAP®
Measurement unit	Volume-%	Volume-%	Volume-%, dew point °C
Measurement range	0–100 vol-%	0–100 vol-%	0–25 vol-%, −10 ... +60 °C (14 ... +140 °F)
Accuracy at +25 °C (+77 °F) and 1013 hPa [1) 2)]	• 0–40 vol-%: **±2 vol-%** • 40–70 vol-%: **±1 vol-%** • 70–100 vol-%: **±2 vol-%**	• 0–30 vol-%: **±2 vol-%** • 30–50 vol-%: **±1 vol-%** • 50–100 vol-%: **±2 vol-%**	0–25 vol-%: **±0.5 vol-%**
Repeatability [2)]	±0.5 vol-% at 60 vol-%	±0.3 vol-% at 40 vol-%	±0.1 vol-% at 2.5 vol-%
Temperature dependence, compensated	Compensated, 0–100 vol-%: ±0.1 % of reading/°C	Compensated, 0–100 vol-%: ±0.1 % of reading/°C	Compensated, 0–25 vol-%: ±0.1 % of reading/°C
Temperature dependence, uncompensated	Uncompensated, 0–100 vol-%: -0.9 % of reading/°C	Uncompensated, 0–100 vol-%: -0.9 % of reading/°C	Uncompensated, 0–25 vol-%: -0.4 % of reading/°C
Pressure dependence, compensated	Compensated, 0–100 vol-%: ±0.015 % of reading/hPa	Compensated, 0–100 vol-%: ±0.01 % of reading/hPa	Compensated, 0–25 vol-%: ±0.06 % of reading/hPa
Pressure dependence, uncompensated	Uncompensated, 0–100 vol-%: +0.2 % of reading/hPa	Uncompensated, 0–100 vol-%: +0.2 % of reading/hPa	Uncompensated, 0–25 vol-%: +0.2 % of reading/hPa
Long-term stability	±2 vol-%/year	±2 vol-%/year	±2 vol-%/year
Start-up time [3)]	30 s		
Warm-up time [4)]	2 min [5)]		
Response time (T_{90})	90 s [6)]		

Property	Methane CH_4	Carbon dioxide CO_2	Water vapor H_2O
Response time with flow-through adapter	90 s at ≥ 0.5 l/min [6)] (recommended: 0.5–1 l/min)		

1) *Excluding cross-interferences to other gases.*
2) *Accuracy specification at 25 °C (+77 °F) and 1013 hPa including non-linearity, calibration uncertainty, and repeatability; temperature and pressure compensated.*
3) *Time to first reading*
4) *Time to specified accuracy*
5) *At +20 °C (+68 °F) ambient temperature*
6) *With standard PTFE filter*

MGP262 measurement performance

Table 21 Measurement performance

Property	Methane CH_4	Carbon dioxide CO_2
Sensor	CARBOCAP®	CARBOCAP®
Measurement unit		Volume-%
Measurement range	0–5 vol-%	0–100 vol-%
Accuracy at +25 °C (+77 °F) and 1013 hPa [1) 2)]	0–2 vol-%: **±0.1 vol-%CH_4** 2–5 vol-%: **±5% of reading**	90–100 vol-%: **±1 vol-%** 0–90 vol-%: **±2 vol-%**
Repeatability [2)]	< ±0.1 vol-% at 1% CH_4	±0.4 vol-% at 95 vol-%
Temperature dependence (typical)	Compensated: 0–2 vol-%: **±0.05%CH_4** 2–5 vol-%: **±0.2%CH_4**	Compensated, 0–100 vol-%: **±0.4 vol-%**
	Uncompensated: **±0.7 % of reading / °C**	Uncompensated, 0–100 vol-%: **±0.1 % of reading / °C**
Pressure dependence (typical)	Compensated: 0–2 vol-%: **±0.05%CH_4** 2–5 vol-%: **±0.1%CH_4**	Compensated, 0–100 vol-%: **±1 vol-%CO_2**
	Uncompensated: **±0.2 % of reading / hPa**	Uncompensated, 0–100 vol-%: **±0.15 % of reading / hPa**

Property	Methane CH_4	Carbon dioxide CO_2
Long-term stability	0–2 vol-%: **±0.1 vol-%CH_4 / year** 2–5 vol-%: **±5% of reading / year**	±2 vol-%/year
Start-up time [3]	30 s	
Warm-up time [4]	2 min [5]	
Response time (T_{90})	90 s [6]	
Response time with flow-through adapter	90 s at ≥ 0.5 l/min [6] (recommended: 0.5–1 l/min)	

1) *Excluding cross-references to other gases.*
2) *Accuracy specification at 25 °C (+77 °F) and 1013 hPa including non-linearity, calibration uncertainty, and repeatability; temperature and pressure compensated.*
3) *Time to first reading.*
4) *Time to specified accuracy.*
5) *At +20 °C (+68 °F) ambient temperature.*
6) *With standard PTFE filter.*

MGP260 series common specifications

Table 22 Inputs and outputs

Property	Specification
Operating voltage	18–30 V DC
Power consumption	Typical: 3 W Maximum: 6 W
Digital output	RS-485 (Modbus RTU)
Analog output	3 × 4–20 mA scalable, isolated
Analog output load	Minimum: 0 Ω Maximum: 500 Ω
Analog output accuracy	±0.2 % of full scale at 25 °C (77 °F)
Analog output temperature dependence	0.005 %/°C (0.003 %/°F) full scale
Analog input (optional)	1 × 4–20 mA (Ex ia) for external pressure or temperature sensor [1]

1) *The optional analog input is galvanically isolated and provides power for the connected external pressure sensor.*

Table 23 Compliance

Property	Specification
Electromagnetic compatibility (EMC)	EN 61326-1, industrial environment
Compliance marks	CE, China RoHS, RCM
Ex approval marks	EU (ATEX), international (IECEx), US/CAN (cMETus), Japan (CML), UK(UKEX), Korea (KCs) [1]
Ex classification	Ex II 1/2 (1) G Ex eb mb [ia] IIB T3 Ga/Gb -40 °C ≤ Tamb ≤ +60 °C Class I, Division 2, Groups C, D; T3

1) See product documentation for full Ex classifications for each region.

Table 24 Operating environment

Property	Specification
Operating temperature range	−40 ... +60 °C (−40 ... +140 °F)
Operating humidity range	0–100 %RH
Storage temperature range	−40 ... +60 °C (−40 ... +140 °F)
Storage humidity range	0–90 %RH
Process pressure range	−500 ... +500 hPa
Process temperature range	+0 ... +60 °C (+32 ... +140 °F)
Process flow range	0–20 m/s

Table 25 Mechanical specification

Property	Specification
Weight	3 kg (6.6 lb)
Thread type	1.5″ male NPT
Mechanical pressure tolerance	20 bar(g)
Cable lead-throughs	1 × M16×1.5 2 × M20×1.5
IP rating	IP66
Materials	
Probe body	AISI316L stainless steel, PPS
Filter cap	Sintered PTFE

Table 26 Options and accessories

Item	Order Code
Configuration cable (RS-485/USB) [1)]	257295
Flow-through adapter	258877
Sintered PTFE filter (includes O-ring)	DRW249919SP
NPT 1.5″ thread test plug	257525SP

1) Vaisala Insight software for Windows® available at www.vaisala.com/insight

11.2 Flow-through adapter dimensions

Figure 31 (page 92) shows the dimensions of the MGP260 flow-through adapter 258877 with MGP260 installed into the adapter. The dimension figure also shows the measurement (from the edge of the adapter mounting plate to the edge of the connection box) that can be used to verify that the probe has been inserted to correct installation depth. The dimensions are given in millimeters and [inches].

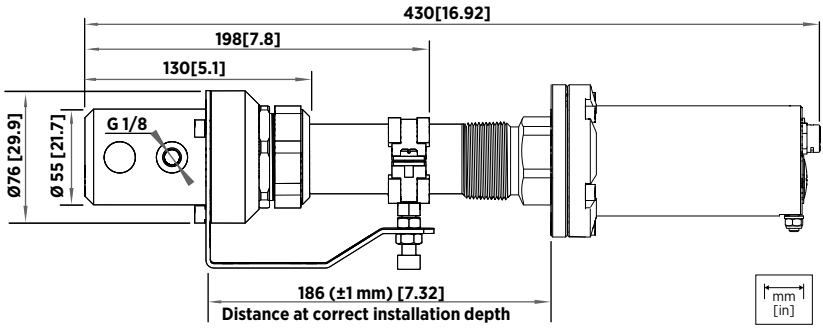

Figure 31 Flow-through adapter dimensions with MGP260 probe

Figure 32 (page 93) shows the dimensions and screw hole sizes of the flow-through adapter mounting plate.

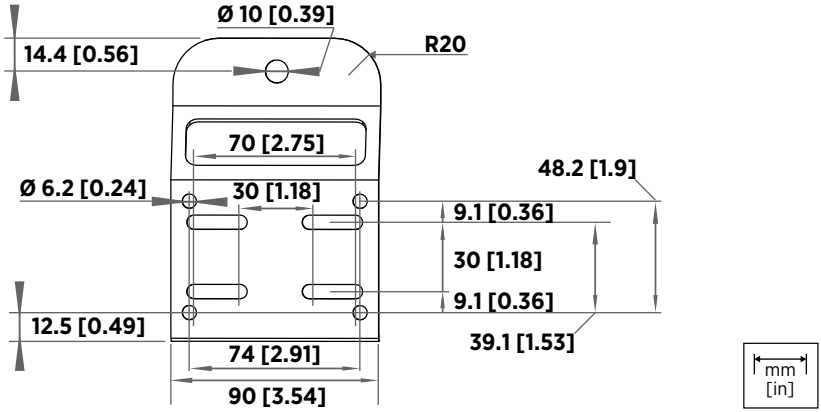

Figure 32 Flow-through adapter mounting plate dimensions

11.3 MGP260 dimensions

Figure 33 (page 93) shows the MGP260 dimensions.

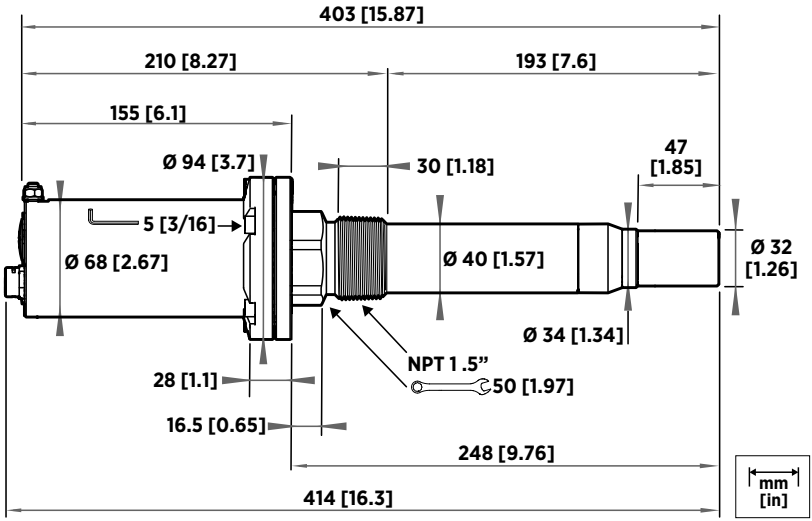

Figure 33 MGP260 dimensions in millimeters and inches

11.4 Wetted parts material information

Vaisala Oyj, as a manufacturer of the Vaisala MGP260 Series CARBOCAP® Multigas Probes, certifies that the materials used in the wetted parts of MGP260 probes are the following:

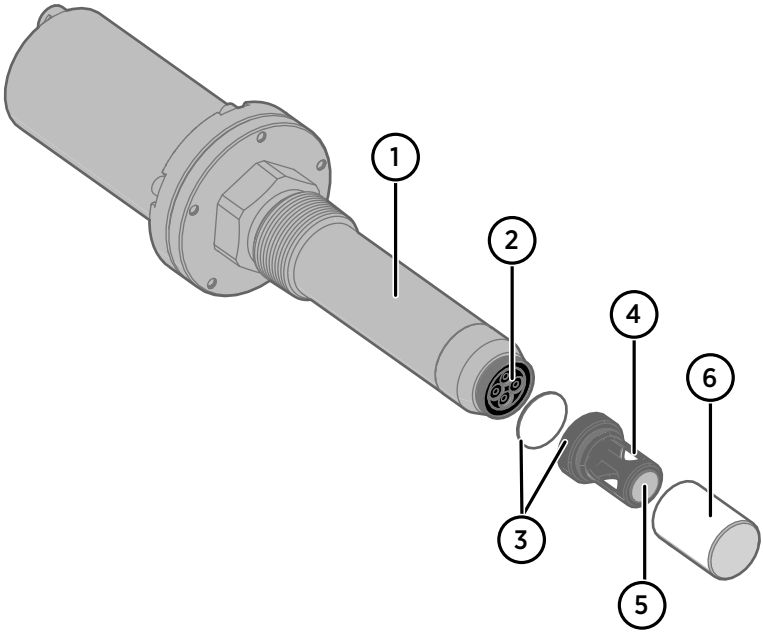

1 **Probe body**: AISI 316L, EN 1.4404 (X2CrNiMo17-12-2) (AISI 316L)
2 **Sensor package window**: polished sapphire
3 **O-ring**: ethylene-propylene rubber, black
4 **Measurement cuvette**: PPS GF40 (polyphenylene sulfide, 40 % glass fibers, black)
5 **Infrared measurement mirror**: optical borosilicate glass, class BK7
6 **Filter cap**: PTFE (polytetrafluoroethylene, porous/solid structure)

11.5 Recycling instructions

These recycling instructions guide you on the end-of-life treatment of this Vaisala product. As waste regulations and infrastructure vary in each country, these instructions only indicate the different components to be separated and common ways to handle them. Always follow local requirements when disposing of the product. Vaisala encourages to use the best available recycling practices to minimize related environmental impacts.

Vaisala is committed to meeting the requirements of the EU Waste Electrical and Electronic Equipment (WEEE) Directive. This directive aims to minimize the impact of electrical and electronic goods on the environment, by increasing reuse and recycling, and reducing the amount of WEEE going to landfill. This symbol indicates that the product should be collected separately from other waste streams and treated appropriately.

MGP260 probes have metal, plastic, and rubber parts that can be removed for recycling. Figure 34 (page 95) highlights the metal parts (connection box, metal barrier, strain relief plates, and screws), plastic parts (filter and cuvette), and the rubber O-ring.

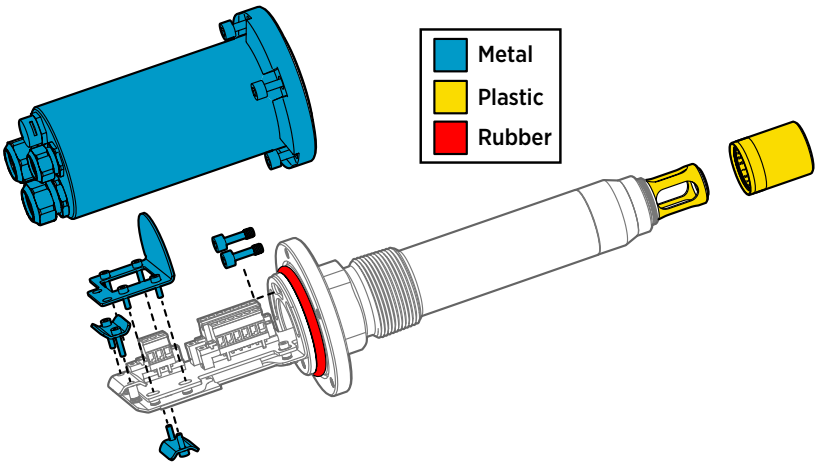

Figure 34 Removing parts for recycling

After removing the parts highlighted in Figure 34 (page 95), dispose of the remaining probe body and component board (shown in Figure 35 (page 95)) as electrical and electronic waste.

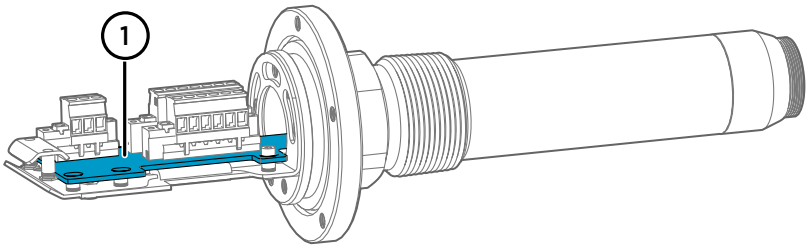

Figure 35 Probe body and component board: dispose as electrical and electronic waste

1 Printed circuit board

Appendix A. Modbus reference

A.1 Modbus registers

CAUTION! Registers are numbered in decimal, starting from one. Register addresses in actual Modbus messages (Modbus Protocol Data Unit (PDU) are in hexadecimal and start from zero. Subtract 1 from the register number presented in this manual to get the address used in the Modbus message. For example, the register number 769 (Modbus address) corresponds to address 0300_{hex} in the Modbus message.

Accessing unavailable (temporarily missing) measurement data does not generate an exception. “Unavailable” value (a quiet NaN for floating point data or 0000_{hex} for integer data) is returned instead. An exception is generated only for any access outside the applicable register ranges.

A.1.1 Measurement data registers

Table 27 Modbus measurement data registers (read-only)

Register number (decimal)	Address (hexadecimal)	Register description	Data format	Unit
Floating point values				
1	0000_{hex}	Methane (CH_4) concentration	32-bit float	ppm_v
	0001_{hex}			
3	0002_{hex}	Methane (CH_4) concentration, dry basis [1)]	32-bit float	ppm_v
	0003_{hex}			
5	0004_{hex}	Carbon dioxide (CO_2) concentration	32-bit float	ppm_v
	0005_{hex}			
7	0006_{hex}	Carbon dioxide (CO_2) concentration, dry basis [1)]	32-bit float	ppm_v
	0007_{hex}			
9	0008_{hex}	Water (H_2O) concentration [1)]	32-bit float	ppm_v
	0009_{hex}			
11	$000A_{hex}$	Water (H_2O) concentration, dry basis [1)]	32-bit float	ppm_v
	$000B_{hex}$			

Register number (decimal)	Address (hexadecimal)	Register description	Data format	Unit
Floating point values				
13	$000C_{hex}$	Dew point temperature [1]	32-bit float	T_d °C
	$000D_{hex}$			
15	$000E_{hex}$	Dew / frost point temperature [1]	32-bit float	T_{df} °C
	$000F_{hex}$			
17	0010_{hex}	Sensor temperature	32-bit float	Ts °C
	0011_{hex}			

1) MGP261 only

Integer values				
257	0100_{hex}	Methane (CH_4) concentration	16-bit integer	ppm_v / 100 (parts per ten thousand)
258	0101_{hex}	Methane (CH_4) concentration, dry basis [1]	16-bit integer	ppm_v / 100 (parts per ten thousand)
259	0102_{hex}	Carbon dioxide (CO_2) concentration	16-bit integer	ppm_v / 100 (parts per ten thousand)
260	0103_{hex}	Carbon dioxide (CO_2) concentration, dry basis [1]	16-bit integer	ppm_v / 100 (parts per ten thousand)
261	0104_{hex}	Water (H_2O) concentration [1]	16-bit integer	ppm_v / 100 (parts per ten thousand)
262	0105_{hex}	Water (H_2O) concentration, dry basis [1]	16-bit integer	ppm_v / 100 (parts per ten thousand)
263	0106_{hex}	Dew point temperature [1]	16-bit integer (× 10)	T_{df} °C
264	0107_{hex}	Dew / frost point temperature [1]	16-bit integer (× 10)	T_{df} °C

A.1.2 Configuration registers

Table 28 Modbus configuration data registers (writable)

Register number (decimal)	Address (hexadecimal)	Register description	Data format	Unit / Valid range
Environmental compensation				
769	0300_{hex}	Power-up value for pressure compensation	32-bit float	hPa Range: 450 ... 1550 Init/default: 1013.25
771	0302_{hex}	Power-up value for temperature compensation	32-bit float	°C Range: -10 ... +70 Init/default: 25
773	0304_{hex}	Volatile pressure compensation (value cleared at probe reset)	32-bit float	hPa Range 450–1550 hPa Init/default: 1013.25
775	0306_{hex}	Volatile temperature compensation (value cleared at probe reset)	32-bit float	°C Range: -10 ... +70 Init/default: 25
Function control				
1281	0500_{hex}	Pressure compensation mode selection	Enum	**0** = Off **1** = Setpoint **2** = External
1282	0501_{hex}	Temperature compensation mode selection	Enum	**0** = Off **1** = Setpoint **2** = Measured **3** = External
Communication				
1537	0600_{hex}	Serial address	16-bit integer	Valid range 1–255 Default: 240

Communication				
1538	0601_{hex}	Bit rate	Enum	Valid range 4800–115200 **4** = 4800 **5** = 9600 **6** = 19200 **7** = 38400 **8** = 57600 **9** = 115200 (default: **6** (19200))
1539	0602_{hex}	Parity, data, stop bits	Enum	**0** = N,8,1 **1** = N,8,2 **2** = E,8,1 **3** = E,8,2 **4** = O,8,1 **5** = O,8,2
1540	0603_{hex}	Response delay	16-bit integer	Valid range 0–1000
1541	0604_{hex}	Restart device	Function	
Analog output 1				
1793	0700_{hex}	Analog output 1 mode selection	Enum	**0** = Disabled **1** = 4–20 mA

Analog output 1				
1794	0701_{hex}	Analog output 1 measurement parameter selection. When written, scalings are reset.	Reg	0000_{hex} (CH_4 wet basis) 0002_{hex} (CH_4 dry basis) [1)] 0004_{hex} (CO_2 wet basis) 0006_{hex} (CO_2 dry basis) [1)] 0008_{hex} (H_2O wet basis) [1)] $000A_{hex}$ (H_2O dry basis) [1)] $000C_{hex}$ (T_d) [1)] $000E_{hex}$ (T_{df}) [1)] See Table 27 (page 96)

Analog output 1				
1795	0702_{hex}	Scale low end for analog output 1 measurement parameter. Minimum and maximum values vary for different parameters.	Float	Output parameters 0000_{hex} (CH_4 wet basis) 0002_{hex} (CH_4 dry basis) [1)] 0004_{hex} (CO_2 wet basis) 0006_{hex} (CO_2 dry basis) [1)]: Minimum: 0 Maximum: 1000000
				Output parameters 0008_{hex} (H_2O wet basis) [1)] $000A_{hex}$ (H_2O dry basis) [1)]: Minimum: 0 Maximum: 250000
				Output parameters $000C_{hex}$ (T_d) [1)] $000E_{hex}$ (T_{df}) [1)]: Minimum: -10 Maximum: 60

Analog output 1				
1797	0704_{hex}	Scale high end for analog output 1 measurement parameter. Minimum and maximum values vary for different parameters.	Float	Output parameters 0000_{hex} (CH_4 wet basis) 0002_{hex} (CH_4 dry basis) [1)] 0004_{hex} (CO_2 wet basis) 0006_{hex} (CO_2 dry basis) [1)]: Minimum: 0 Maximum: 1000000
				Output parameters 0008_{hex} (H_2O wet basis) [1)] $000A_{hex}$ (H_2O dry basis) [1)]: Minimum: 0 Maximum: 250000
				Output parameters $000C_{hex}$ (T_d) [1)] $000E_{hex}$ (T_{df}) [1)]: Minimum: -10 Maximum: 60
1799	0706_{hex}	Error output level (mA)	Float	Min. 0.5 mA Max. 24 mA
1801	0708_{hex}	Low clipping limit	Float	0–2.5 %
1803	$070A_{hex}$	Low error limit	Float	0–1025 %
1805	$070C_{hex}$	High clipping limit	Float	0–12.5 %
1807	$070E_{hex}$	High error limit	Float	0–1025 %

1) MGP261 only.

Analog output 2				
2049	0800_{hex}	Analog output 2 mode selection	Enum	**0** = Disabled **1** = 4–20 mA
2050	0801_{hex}	Analog output 2 measurement parameter selection. When written, scalings are reset.	Reg	0000_{hex} (CH_4 wet basis) 0002_{hex} (CH_4 dry basis) [1)] 0004_{hex} (CO_2 wet basis) 0006_{hex} (CO_2 dry basis) [1)] 0008_{hex} (H_2O wet basis) [1)] $000A_{hex}$ (H_2O dry basis) [1)] $000C_{hex}$ (T_d) [1)] $000E_{hex}$ (T_{df}) [1)] See Table 27 (page 96)

Analog output 2				
2051	0802_{hex}	Scale low end for analog output 2 measurement parameter. Minimum and maximum values vary for different parameters.	Float	Output parameters 0000_{hex} (CH_4 wet basis) 0002_{hex} (CH_4 dry basis) [1)] 0004_{hex} (CO_2 wet basis) 0006_{hex} (CO_2 dry basis) [1)]: Minimum: 0 Maximum: 1000000
				Output parameters 0008_{hex} (H_2O wet basis) [1)] $000A_{hex}$ (H_2O dry basis) [1)]: Minimum: 0 Maximum: 250000
				Output parameters $000C_{hex}$ (T_d) [1)] $000E_{hex}$ (T_{df}) [1)]: Minimum: -10 Maximum: +60

Analog output 2				
2053	0804_{hex}	Scale high end for analog output 2 measurement parameter. Minimum and maximum values vary for different parameters.	Float	Output parameters 0000_{hex} (CH_4 wet basis) 0002_{hex} (CH_4 dry basis) [1)] 0004_{hex} (CO_2 wet basis) 0006_{hex} (CO_2 dry basis) [1)]: Minimum: 0 Maximum: 1000000
				Output parameters 0008_{hex} (H_2O wet basis) [1)] $000A_{hex}$ (H_2O dry basis) [1)]: Minimum: 0 Maximum: 250000
				Output parameters $000C_{hex}$ (T_d) [1)] $000E_{hex}$ (T_{df}) [1)]: Minimum: -10 Maximum: +60
2055	0806_{hex}	Error output level (mA)	Float	Min. 0.5 mA Max. 24 mA
2057	0808_{hex}	Low clipping limit	Float	0–2.5 %
2059	$080A_{hex}$	Low error limit	Float	0–1025 %
2061	$080C_{hex}$	High clipping limit	Float	0–12.5 %
2063	$080E_{hex}$	High error limit	Float	0–1025 %

Analog output 3				
2305	0900_{hex}	Analog output 3 mode selection	Enum	**0** = Disabled **1** = 4–20 mA
2306	0901_{hex}	Analog output 3 measurement parameter selection. When written, scalings are reset.	Reg	0000_{hex} (CH_4 wet basis) 0002_{hex} (CH_4 dry basis) [1)] 0004_{hex} (CO_2 wet basis) 0006_{hex} (CO_2 dry basis) [1)] 0008_{hex} (H_2O wet basis) [1)] $000A_{hex}$ (H_2O dry basis) [1)] $000C_{hex}$ (T_d) [1)] $000E_{hex}$ (T_{df}) [1)] See Table 27 (page 96)

Analog output 3				
2307	0902_{hex}	Scale low end for analog output 3 measurement parameter. Minimum and maximum values vary for different parameters.	Float	Output parameters 0000_{hex} (CH_4 wet basis) 0002_{hex} (CH_4 dry basis) [1)] 0004_{hex} (CO_2 wet basis) 0006_{hex} (CO_2 dry basis) [1)]: Minimum: 0 Maximum: 1000000
				Output parameters 0008_{hex} (H_2O wet basis) [1)] $000A_{hex}$ (H_2O dry basis) [1)]: Minimum: 0 Maximum: 250000
				Output parameters $000C_{hex}$ (T_d) [1)] $000E_{hex}$ (T_{df}) [1)]: Minimum: -10 Maximum: +60

Analog output 3				
2309	0904_{hex}	Scale high end for analog output 3 measurement parameter. Minimum and maximum values vary for different parameters.	Float	Output parameters 0000_{hex} (CH_4 wet basis) 0002_{hex} (CH_4 dry basis) [1)] 0004_{hex} (CO_2 wet basis) 0006_{hex} (CO_2 dry basis) [1)]: Minimum: 0 Maximum: 1000000
				Output parameters 0008_{hex} (H_2O wet basis) [1)] $000A_{hex}$ (H_2O dry basis) [1)]: Minimum: 0 Maximum: 250000
				Output parameters $000C_{hex}$ (T_d) [1)] $000E_{hex}$ (T_{df}) [1)]: Minimum: -10 Maximum: +60
2311	0906_{hex}	Error output level (mA)	Float	Min. 0.5 mA Max. 24 mA
2313	0908_{hex}	Low clipping limit	Float	0–2.5 %
2315	$090A_{hex}$	Low error limit	Float	0–1025 %
2317	$090C_{hex}$	High clipping limit	Float	0–12.5 %
2319	$090E_{hex}$	High error limit	Float	0–1025 %

Analog input 1				
2562	$0A01_{hex}$	Analog input 1 compensation parameter. Read-only: controlled by the pressure and temperature compensation mode registers.	Reg	0204_{hex} (pressure) 0206_{hex} (temperature)
2563	$0A02_{hex}$	Scale low end for analog input 1 compensation parameter. Minimum and maximum values vary for different parameters.	Float	0204_{hex} (pressure) Minimum: 0 Maximum: 20 000
				0206_{hex} (temperature) Minimum: -200 Maximum: +400
2565	$0A04_{hex}$	Scale high end for analog input 1 compensation parameter. Minimum and maximum values vary for different parameters.	Float	0204_{hex} (pressure) Minimum: 0 Maximum: 20 000
				0206_{hex} (temperature) Minimum: -200 Maximum: +400
2567	$0A06_{hex}$	Input value (read-only)	Float	

A.1.3 Status registers

Table 29 Modbus status data registers (read-only)

Register number (decimal)	Address (hexadecimal)	Register description	Data format	Bitmask
513	0200_{hex}	Error code	32-bit signed integer	0201_{hex} (status code low): see Table 30 (page 111).
	0202_{hex}			0202_{hex} (status code high): see Table 31 (page 111).

Register number (decimal)	Address (hexadecimal)	Register description	Data format	Bitmask
517	0204_{hex}	Pressure compensation values in use	Float	
519	0206_{hex}	Temperature compensation values in use	Float	
521	0208_{hex}	CH_4 measurement status	16-bit signed integer	**0000_{hex}**: Unsupported **0001_{hex}**: Reading is not reliable **0002_{hex}**: Under range **0003_{hex}**: Over range **0004_{hex}**: Noisy **0005_{hex}**: Value locked **0006_{hex}**: Calibration expired **0007_{hex}**: Sensor failure **0008_{hex}**: Measurement not ready
522	0209_{hex}	CH_4 measurement status (dry basis) 1)	16-bit signed integer	
523	$020A_{hex}$	CO_2 measurement status	16-bit signed integer	
524	$020B_{hex}$	CO_2 measurement status (dry basis) 1)	16-bit signed integer	
525	$020C_{hex}$	H_2O measurement status 1)	16-bit signed integer	
526	$020D_{hex}$	T_{df} measurement status 1)	16-bit signed integer	
527	$020E_{hex}$	T_s measurement status 1)	16-bit signed integer	
528	$020F_{hex}$	Device status	16-bit signed integer	**0000_{hex}**: Critical failure **0001_{hex}**: Error **0002_{hex}**: Warning **0003_{hex}**: Notification
529	0210_{hex}	Clear error log: the error log is cleared if 1 is written, other values are ignored. Register always reads as 0.	Function	
530	0211_{hex}	Analog input level	Float	
532	0213_{hex}	Analog input value	Float	

1) MGP261 only

Table 30 Error codes in register 0200_{hex} (status code low)

Bitmask	Error message	Severity
0000_{hex}	Firmware checksum mismatch.	Critical
0001_{hex}	Device settings corrupted.	Critical
0009_{hex}	Infrared source temperature too high.	Error
0010_{hex}	Infrared source failure.	Error
0011_{hex}	Infrared source failure.	Error
0012_{hex}	Supply voltage out of range.	Error
0013_{hex}	Internal voltage out of range.	Error
0014_{hex}	Sensor signal low.	Error
0015_{hex}	Sensor signal low.	Error
0016_{hex}	Internal voltage out of range.	Error
0017_{hex}	Sensor signal distorted.	Error
0018_{hex}	Sensor signal distorted.	Error
0019_{hex}	CH_4 measurement out of range.	Error
0020_{hex}	CO_2 measurement out of range.	Error
0021_{hex}	H_2O measurement out of range.	Error
0022_{hex}	T_d measurement out of range.	Error
0023_{hex}	Sensor heater failure.	Error
0024_{hex}	Infrared source temperature too high.	Error
0025_{hex}	Internal temperature too high.	Error
0026_{hex}	Temperature measurement error.	Error
0027_{hex}	Supply power insufficient for analog input.	Error
0028_{hex}	Analog input 1 out of range.	Error
0030_{hex}	Internal temperature error.	Error
0031_{hex}	Supply power insufficient for operation.	Error

Table 31 Error codes in register 0202_{hex} (status code high)

Bitmask	Error message	Severity
0032_{hex}	Sensor signal low.	Warning

Bitmask	Error message	Severity
0033_{hex}	Sensor signal low.	Warning
0034_{hex}	Internal temperature high.	Warning
0035_{hex}	Sensor signal distorted.	Warning
0036_{hex}	Sensor signal distorted.	Warning
0037_{hex}	Sensor signal distorted.	Warning
0038_{hex}	Unexpected device restart.	Warning
0039_{hex}	Calibration has expired.	Warning
0042_{hex}	Infrared source temperature out of range.	Warning
0043_{hex}	Supply power insufficient for analog input.	Warning
0044_{hex}	Infrared source temperature out of range.	Warning
0048_{hex}	Heater off.	Info
0049_{hex}	Calibration is about to expire.	Info

A.1.4 Device identification objects

Table 32 Device identification objects

Object ID (decimal)	Object ID (hexadecimal)	Object name	Example contents
0	00_{hex}	VendorName	"Vaisala"
1	01_{hex}	ProductCode	"MGP261 "
2	02_{hex}	MajorMinorVersion	Software version (for example "1.2.3")
3	03_{hex}	VendorUrl	"http://www.vaisala.com/"
4	04_{hex}	ProductName	"Vaisala Multigas Probe MGP261"
128	80_{hex}	SerialNumber [1)]	Probe serial number (for example, "R0710040")
129	81_{hex}	Calibration date [1)]	Date of the factory calibration

Object ID (decimal)	Object ID (hexadecimal)	Object name	Example contents
130	82_{hex}	Calibration text [1)]	Information text of the factory calibration

1) Vaisala-specific device information object.

Maintenance and calibration services

Vaisala offers comprehensive customer care throughout the life cycle of our measurement instruments and systems. Our factory services are provided worldwide with fast deliveries. For more information, see www.vaisala.com/calibration.

- Vaisala Online Store at store.vaisala.com is available for most countries. You can browse the offering by product model and order the right accessories, spare parts, or maintenance and calibration services.
- To contact your local maintenance and calibration expert, see www.vaisala.com/contactus.

Warranty

For standard warranty terms and conditions, see www.vaisala.com/warranty.
Please observe that any such warranty may not be valid in case of damage due to normal wear and tear, exceptional operating conditions, negligent handling or installation, or unauthorized modifications. Please see the applicable supply contract or Conditions of Sale for details of the warranty for each product.

Technical support

Contact Vaisala technical support at helpdesk@vaisala.com. Provide at least the following supporting information as applicable:

- Product name, model, and serial number
- Software/Firmware version
- Name and location of the installation site
- Name and contact information of a technical person who can provide further information on the problem

For more information, see www.vaisala.com/support.

Recycling

Recycle all applicable material. For information on recycling the different materials used in MGP260, see Recycling instructions (page 94).

Follow the statutory regulations for disposing of the product and packaging.

VAISALA

www.vaisala.com

AKRIBIS · www.akribis.info · contacto@akribis.info