USER GUIDE

MGP241

Vaisala · Authorized Partner

Distributed by AKRIBIS

M213080EN-D

User Guide

Multigas probe for carbon dioxide and humidity measurement

MGP241

VAISALA

AKRIBIS · www.akribis.info · contacto@akribis.info

PUBLISHED BY

Vaisala Oyj
Vanha Nurmijärventie 21, FI-01670 Vantaa, Finland
P.O. Box 26, FI-00421 Helsinki, Finland
+358 9 8949 1
vaisala.com
docs.vaisala.com

© Vaisala 2026

No part of this document may be reproduced, published, or publicly displayed in any form or by any means, electronic or mechanical (including photocopying), nor may its contents be modified, translated, adapted, sold, or disclosed to a third party without prior written permission of the copyright holder. Translated document and translated portions of the document are based on the original English version. Parts of the translation may have been created using machine-assisted translation. In ambiguous cases, the English version is applicable, not the translation.

The contents of this document are subject to change without prior notice.

Local rules and regulations applicable to the products and services may vary, and they shall take precedence over the information contained in this document. Vaisala makes no representations on this document's compliance with the local rules and regulations applicable at any given time, and hereby disclaims any and all responsibilities related thereto. You are instructed to confirm the applicability of the local rules and regulations and their effect on the intended use of the products and services.

This document does not create any legally binding obligations for Vaisala towards customers or end users. All legally binding obligations are set forth exclusively in the applicable contract or in the relevant set of General Conditions of Vaisala (vaisala.com/policies).

This product contains software developed by Vaisala or third parties. Use of the software is governed by license terms and conditions included in the applicable contract or, in the absence of separate license terms and conditions, by the General License Conditions of Vaisala Group.

This product may contain open-source software (OSS) components. In the event this product contains OSS components, then such OSS is governed by the terms and conditions of the applicable OSS licenses, and you are bound by the terms and conditions of such licenses in connection with your use and distribution of the OSS in this product. Applicable OSS licenses are included in the product itself or provided to you on any other applicable media, depending on each individual product and the product items delivered to you.

Table of contents

1. About this document ... 9
1.1 Version information ... 9
1.2 Related manuals ... 10
1.3 Documentation conventions ... 11
1.4 Trademarks ... 11

2. Product overview ... 12
2.1 Introduction to MGP241 Multigas Probe ... 12
2.2 MGP241 basic features and options ... 12
2.2.1 Measurement parameters ... 13
2.2.2 Wet basis and dry basis measurement output ... 13
2.3 MGP241 probe parts ... 14
2.3.1 Cable connectors ... 14
2.4 Measurement principle ... 15
2.5 Connectivity to Vaisala Insight software ... 16
2.6 Analog outputs ... 17
2.7 Analog input ... 17
2.8 Safety ... 18
2.9 Regulatory statements ... 18
2.9.1 FCC Part 15 compliance statement ... 18
2.9.2 Canada ICES-3 / NMB-3 compliance statement ... 18

3. Installation ... 20
3.1 Installation overview ... 20
3.1.1 NPT 1.5 in thread test plug 257525SP ... 20
3.1.2 Installation preparations ... 21
3.1.3 MGP241 dimensions ... 22
3.1.4 Recommended installation position on pipeline ... 22
3.1.5 Gas safety during installation ... 23
3.1.6 Pressure compensation input options ... 23
3.2 Installing the probe ... 23
3.2.1 Installation into threaded port ... 26
3.2.2 Ball valve installation ... 27
3.2.3 Flow-through adapter installation ... 28
3.3 Wiring ... 28
3.3.1 Wiring examples ... 31
3.4 Finalizing installation ... 32

4. Using probe with Insight PC software ... 34
4.1 Vaisala Insight PC software ... 34
4.1.1 Insight software user modes ... 34
4.2 Connecting to Insight software ... 34
4.3 Insight main view ... 36

5. Using probe with Indigo transmitters 37
5.1 Using probe with Indigo transmitters 37

6. Analog output configuration 40
6.1 Analog output configuration overview 40
6.1.1 Default parameter configuration of output channels 40
6.1.2 Default analog output configuration with Indigo transmitters 40
6.2 Configuring analog outputs with Insight 41

7. Environmental compensation 43
7.1 Environmental compensation overview 43
7.1.1 Temperature compensation 43
7.1.2 Pressure compensation 43
7.2 Configuring environmental compensations with Insight 44
7.2.1 Configuring analog input from external analog pressure or temperature sensor 46
7.2.2 Sending analog input channel value from an analog output channel 47

8. Calibration 49
8.1 Calibration overview 49
8.1.1 Compensation mode during calibration 49
8.2 Calibration and adjustment with Insight PC software 50
8.2.1 Zero point adjustment 51
8.2.2 Calibrating and adjusting carbon dioxide (CO_2) measurement 51
8.2.3 Calibrating and adjusting temperature measurement 52

9. Modbus 53
9.1 Modbus 53
9.2 Configuring Modbus communication settings with Insight 53

10. Technical data 55
10.1 MGP241 specifications 55
10.2 Recycling instructions 59

Appendix A: Modbus reference 60
A.1 Data encoding 60
A.2 32-bit floating point or 32-bit integer format 60
A.3 16-bit integer format 60
A.4 Modbus registers 61
A.4.1 Measurement data registers 61
A.4.2 Configuration registers 62
A.4.3 Status registers 71
A.4.4 Test value registers 74
A.4.5 Device identification objects 74

Index 76

Service centers.....79

Technical support.....79

Warranty.....79

List of figures

Figure 1 MGP241 probe parts....14
Figure 2 MGP241 cable connectors....14
Figure 3 Probe cuvette with mirror and sensor chips.... 15
Figure 4 Measurement in the measurement cuvette....16
Figure 5 NPT 1.5 in thread test plug.... 20
Figure 6 MGP241 dimensions....22
Figure 7 Recommended MGP241 installation position on pipeline....22
Figure 8 MGP241 threaded port installation example with recommended orientation and depth....26
Figure 9 MGP241 ball valve installation example with recommended orientation and depth.... 27
Figure 10 MGP241 in flow-through adapter 258877....28
Figure 11 M12 4-pin A-coded female connector pinout....29
Figure 12 M12 5-pin A-coded male connector pinout....29
Figure 13 M12 8-pin A-coded male connector pinout.... 30
Figure 14 Wiring with Vaisala cable, separate loop-powering and galvanic isolation of analog outputs....31
Figure 15 Wiring with 2 power supplies, common loop-powering and galvanic isolation of analog outputs.... 32
Figure 16 Insight main menu and settings....36
Figure 17 Connecting MGP241 probe to Indigo520 transmitter....38
Figure 18 Connecting MGP241 probe to Indigo300 transmitter....39
Figure 19 Analog output configuration options in Insight....41
Figure 20 Configure device view in Insight PC software 45
Figure 21 Analog input 1 configuration view in Insight.... 47
Figure 22 Calibration menu in Insight PC software....50
Figure 23 Modbus communication settings in Insight PC software....53

List of tables

Table 1 Document versions (English) 9
Table 2 Related manuals 11
Table 3 MGP241 measurement parameters 13
Table 4 Analog output default parameter configuration 40
Table 5 Default analog output configuration per output parameter 41
Table 6 Default Modbus serial communication settings 53
Table 7 Measurement performance 55
Table 8 Powering 56
Table 9 Inputs and outputs 56
Table 10 Mechanical specification 56
Table 11 Operating environment 57
Table 12 Compliance 57
Table 13 Compatible devices 58
Table 14 Accessories and spare parts 58
Table 15 Interpretation of 16-bit signed integer values 61
Table 16 Modbus measurement data registers (read-only) 61
Table 17 Modbus configuration data registers (writable) 62
Table 18 Modbus status data registers (read-only) 71
Table 19 Error codes in register 0x0200 (status code low) 72
Table 20 Error codes in register 0x0202 (status code high) 73
Table 21 Modbus test registers (read-only) 74
Table 22 Device identification objects 74

1. About this document

1.1 Version information

This document provides instructions for installing, using, and maintaining Vaisala MGP241 Multigas Probe for carbon dioxide and humidity measurement.

Table 1 Document versions (English)

Document code	Date	Description
M213080EN-D	July 2026	Added wiring examples and corrected Modbus register information. Analog output, cable spare parts, and power supply requirements information updated. Updated sections: • Wiring (page 28) • MGP241 specifications (page 55) • 32-bit floating point or 32-bit integer format (page 60) • Status registers (page 71) • Test value registers (page 74) Added sections: • Wiring examples (page 31) • Default analog output configuration with Indigo transmitters (page 40)
M213080EN-C	October 2025	Updated section Wiring (page 28).

Document code	Date	Description
M213080EN-B	January 2025	Added sections: • Related manuals (page 10) • Analog outputs (page 17) • Analog input (page 17) • Vaisala Insight PC software (page 34) • Insight software user modes (page 34) • Connecting to Insight software (page 34) • Insight main view (page 36) • Using probe with Indigo transmitters (page 37) • Analog output configuration overview (page 40) • Default parameter configuration of output channels (page 40) • Configuring analog outputs with Insight (page 41) • Environmental compensation overview (page 43) • Temperature compensation (page 43) • Pressure compensation (page 43) • Configuring environmental compensations with Insight (page 44) • Configuring analog input from external analog pressure or temperature sensor (page 46) • Sending analog input channel value from an analog output channel (page 47) • Calibration overview (page 49) • Compensation mode during calibration (page 49) • Calibration and adjustment with Insight PC software (page 50) • Zero point adjustment (page 51) • Calibrating and adjusting carbon dioxide (CO_2) measurement (page 51) • Calibrating and adjusting temperature measurement (page 52) • Modbus (page 53) • Configuring Modbus communication settings with Insight (page 53) Updated sections: • Wet basis and dry basis measurement output (page 13) • Cable connectors (page 14)

1.2 Related manuals

For the latest versions of these documents, see docs.vaisala.com.

Table 2 Related manuals

Document code	Name
M212849EN	Vaisala Indigo300 Transmitter User Guide
M212287EN	Vaisala Indigo500 Series Transmitters User Guide

1.3 Documentation conventions

WARNING! Alerts you to a hazardous situation that, if not avoided, could result in death or serious injury.

CAUTION! Alerts you to a hazardous situation that, if not avoided, could result in minor or moderate injury.

NOTICE! Alerts you to a situation that, if not avoided, could result in the product to be damaged, or important data to be lost.

Highlights important information on using the product.

1.4 Trademarks

Vaisala® and CARBOCAP® are registered trademarks of Vaisala Oyj.

All other product or company names that may be mentioned in this publication are trade names, trademarks, or registered trademarks of their respective owners.

2. Product overview

2.1 Introduction to MGP241 Multigas Probe

The MGP241 probe measures carbon dioxide (CO_2) and humidity (H_2O vapor) in demanding conditions. MGP241 measures carbon dioxide and humidity in vol-% or ppm by volume units, or alternatively dew point temperature (T_d) and frost point temperature (T_f). The patented CARBOCAP infrared technology enables simultaneous detection of multiple gases unlike the traditional non-dispersive infrared (NDIR) measurement technique. This allows compensation for sensor drift, sensor aging, and for any cross-interference effects between measured gases. Calibration gases are not needed for routine operation; a functional check and drift check every 12 months is recommended.

MGP241 measures gases directly in the process without a need for drying or other sample treatment. This simplifies the installation and minimizes the footprint of the measurement solution compared to traditional gas analyzers. The rapid measurement cycle takes only seconds, providing direct real time measurements for process control and monitoring. The CO_2 measurement can be shown either as wet basis or dry basis values. Thanks to the built in temperature and pressure compensation algorithms, and the CARBOCAP infrared technology, the measurement is stable and reliable across a wide range of process and environmental conditions.

The MGP241 probe has 3 4–20 mA analog outputs for CO_2 and H_2O vapor concentrations and for retransmission of analog input, as well as a 4–20 mA analog input for external pressure or temperature signal used for compensation. The probe also offers Modbus RTU protocol for digital connectivity. For easy-to-use access to configuration, diagnostics, and calibration and adjustment functionalities, the MGP241 probe can be connected to Vaisala Insight PC software with a USB cable accessory, and it can also be connected to Indigo devices: Indigo80, Indigo300, and Indigo520.

2.2 MGP241 basic features and options

- Available measurement parameters: carbon dioxide (CO_2) and humidity (H_2O vapor)
- Standalone probe with digital Modbus® RTU over RS-485 and 3 analog outputs (4–20 mA)
- Analog input (4–20 mA) for external temperature or pressure compensation for more accurate measurement
- Compatible with Vaisala Insight PC software and Vaisala Indigo80, Indigo300, and Indigo520

2.2.1 Measurement parameters

Table 3 MGP241 measurement parameters

Parameter	Unit	Measurement range
Carbon dioxide (CO_2)	Volume-%	0–100 vol-%
Water vapor (H_2O)	• Volume-% • Dew point and frost point temperature	• 0–25 vol-% • -10 ... +60 °C (+14 ... +140 °F)

2.2.2 Wet basis and dry basis measurement output

MGP241 carbon dioxide and water vapor measurements can be shown either as wet basis or dry basis values. The wet basis / dry basis measurement output selection is made when ordering the probe, and can be configured with Vaisala Insight PC software or Modbus.

The following formula shows the conversion between wet basis and dry basis values.

$$X(dry) = \frac{X(wet)}{100\,\% \ - \ H_2O}$$

where:

X(dry) gas concentration (dry basis) (%)
X(wet) gas concentration (wet basis) (%)
H_2O gas concentration (wet basis) (%)

2.3 MGP241 probe parts

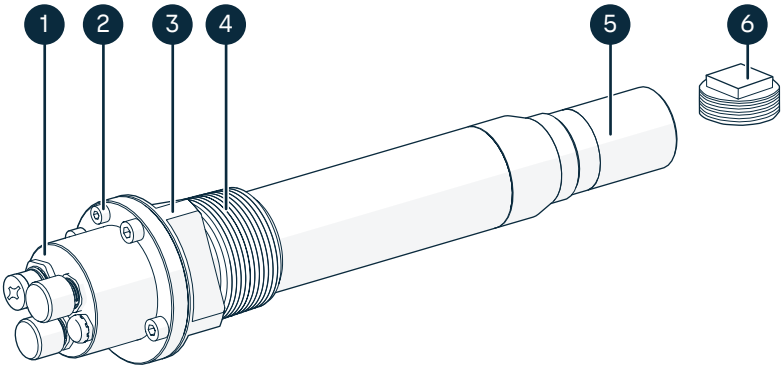

Figure 1 MGP241 probe parts

1 Cable connectors
2 Grounding point
3 Tightening nut: only tighten from the tightening nut when installing (wrench size: 50 mm (1.97 in))
4 1.5 in male NPT thread: **never install to any other thread type than 1.5 in female NPT thread**
5 Probe filter
6 1.5 in NPT thread test plug

2.3.1 Cable connectors

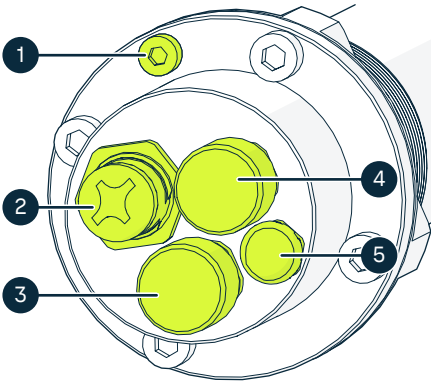

Figure 2 MGP241 cable connectors

1 M4 ring terminal: grounding point
2 M12 4-pin female connector: analog input
3 M12 8-pin male connector: used for powering and analog outputs
4 M12 5-pin male connector: used for powering and digital output
5 Breather plug: do not adjust

2.4 Measurement principle

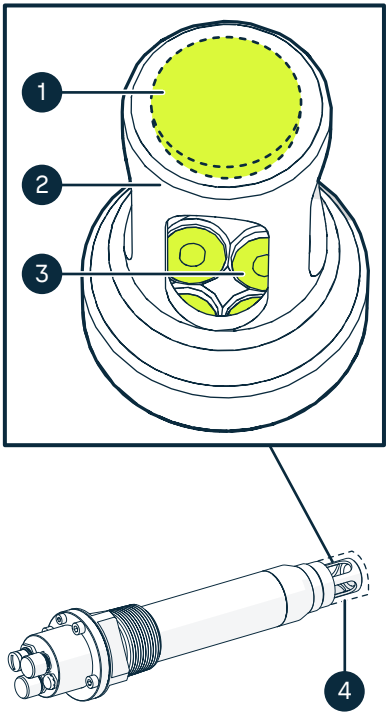

The Vaisala CARBOCAP® sensor used in the probe is a silicon-based, non-dispersive infrared (NDIR) sensor for the measurement of carbon dioxide (CO_2), and humidity (H_2O).

Figure 3 Probe cuvette with mirror and sensor chips

1 Mirror
2 Cuvette
3 Sensor chips under TO5 packages
4 Probe filter covering the cuvette

NOTICE! The probe filter must be in place when the probe is inserted into the process for the instrument to function as intended.

The sensitivity to gases is based on absorption of infrared light at a characteristic wavelength. During measurement, infrared light is routed through the cuvette that contains the gas to be measured. A mirror reflects the light from the cuvette to thermopile detectors that measure the light intensity at a wavelength determined by Fabry–Pérot interferometer (FPI) and a band pass filter.

The measurement consists of two steps: first, the FPI is electrically tuned so that its pass band coincides with the characteristic absorption wavelength of the measured gas and the signal is recorded. Second, the pass band is shifted to a wavelength where no absorption occurs in order to get a reference signal. The ratio of these two signals, one at the absorption

wavelength and the other at the reference wavelength, gives the fraction of light absorption from which the gas concentration is calculated. Measuring the reference signal compensates the possible effects of sensor aging and signal attenuation due to dirt on optical surfaces, making the sensor very stable over time.

TO5 packages with hermetic windows are used to protect the sensor chips from moisture and contamination.

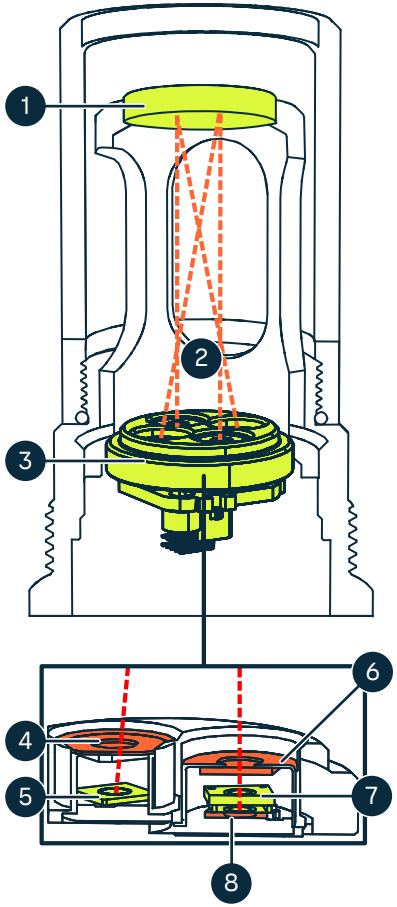

Figure 4 Measurement in the measurement cuvette

1 Mirror
2 Light absorbed by the measured gases
3 Sensor chips under TO5 packages (see items 4–8)
4 Hermetic window
5 Thermopile detector
6 Hermetic window
7 Fabry–Pérot interferometer
8 Light source (microglow)

2.5 Connectivity to Vaisala Insight software

The probe can be connected to Vaisala Insight software using a Vaisala USB cable (item code 242659). With the Insight software, you can:

- Calibrate and adjust the measurement.
- See device information and status.
- See real-time measurement.
- Configure serial communication settings, analog input and output parameters and scaling, and environmental compensations.

More information

- Connecting to Insight software (page 34)
- Insight main view (page 36)

2.6 Analog outputs

The MGP241 probe has 3 scalable, isolated 4–20 mA analog output channels. Each output has the following configuration options:

- Output parameter selection
- Output scale low end and high end
- Clipping and error limits
- Error output level

The configuration of the outputs (output parameter selection and scaling) is selected when ordering the probe, and can be changed with Modbus or Vaisala Insight PC software.

More information

- Analog output configuration overview (page 40)
- Default parameter configuration of output channels (page 40)
- Configuring analog outputs with Insight (page 41)

2.7 Analog input

The MGP241 probe has 1 isolated analog input channel with current input. The analog input range is 4-20 mA and the range can be scaled.

The input channel can be used for pressure or temperature compensation. The configuration of the inputs (input parameter and scaling) is selected when ordering the probe, and can be changed with Modbus or Vaisala Insight PC software.

MGP241 powers your 2-wire current loop analog input device. Do not power analog input with an external power supply.

More information

- Configuring analog input from external analog pressure or temperature sensor (page 46)

2.8 Safety

This product has been type-tested for safety. Note the following precautions:

CAUTION! To avoid compromising the leak tightness of the installation:
- Ensure that the thread type of the installation port is 1.5 in female NPT. If unsure, verify the thread type with the 1.5 in NPT thread test plug.
- Apply PTFE tape to the 1.5 in male NPT thread of the probe as instructed in Installing the probe (page 23), and make sure that the PTFE tape seal has not been damaged by rotating the probe open (counter-clockwise) in the installation port.

2.9 Regulatory statements

2.9.1 FCC Part 15 compliance statement

This equipment has been tested and found to comply with the limits for a Class B digital device, pursuant to Part 15 of the FCC rules. These limits are designed to provide reasonable protection against harmful interference in a residential installation. This equipment generates, uses and can radiate radio frequency energy and, if not installed and used in accordance with the instructions, may cause harmful interference to radio communications. However, there is no guarantee that the interference will not occur in a particular installation. If this equipment does cause harmful interference to radio or television reception, which can be determined by turning the equipment off and on, the user is encouraged to try to correct the interference by one or more of the following measures:

- Reorient or relocate the receiving antenna.
- Increase the separation between the equipment and receiver.
- Connect the equipment into an outlet on a circuit different from that to which the receiver is connected.
- Consult the dealer or an experienced radio/TV technician for help.

Changes or modifications to this equipment not expressly approved by the party responsible for compliance could void the user's authority to operate the equipment.

CAUTION! This device complies with part 15 of the FCC Rules. Operation is subject to the following two conditions: (1) This device may not cause harmful interference, and (2) this device must accept any interference received, including interference that may cause undesired operation.

2.9.2 Canada ICES-3 / NMB-3 compliance statement

This Class B digital apparatus complies with Canadian ICES-003.

Cet appareil numérique de classe B est conforme à la norme canadienne NMB-003.

3. Installation

3.1 Installation overview

MGP241 can be installed either directly into the process (for example, through a flange or ball valve in the actual process pipeline), or using a flow-through adapter (for example, in a sampling line installation or when performing a field calibration).

When installing MGP241 series probes into pipes with condensing gas, it is typical for the probe to require some time to heat up and recover from condensation. Installing the MGP241 probe into pipes with condensing gas and intermittent flow is not recommended.

More information

- Installing the probe (page 23)
- Installation into threaded port (page 26)
- Ball valve installation (page 27)
- Flow-through adapter installation (page 28)

3.1.1 NPT 1.5 in thread test plug 257525SP

NOTICE! The correct thread type in which to install MGP241 is **1.5 in female NPT**. Installing into any other thread type can damage the equipment and compromise the leak tightness of the connection. If unsure, verify the thread type with the NPT 1.5 in thread test plug.

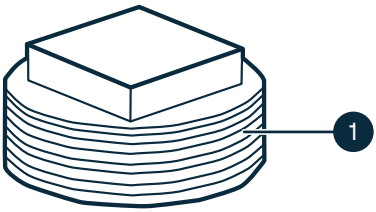

Figure 5 NPT 1.5 in thread test plug

1. NPT 1.5 in male thread (same as on MGP241 connector)

MGP241 comes shipped with an NPT 1.5 in male thread test plug (Vaisala order code: 257525SP). If you are uncertain about the thread type of the process connector you want to install MGP241 into, use the thread test plug to check that it fits into the process connector threads (that is, that the process connector thread type is **NPT 1.5 in female**).

3.1.2 Installation preparations

Before starting the installation, check the following:

Installing the MGP241 probe into pipes with condensing gas and intermittent flow is not recommended. When the probe is installed into a pipe with condensing gas, it is typical for the probe to require some time to heat up and recover from condensation.

- The MGP241 probe requires a dedicated 19–30 V DC power supply. In addition to the power supply input for the probe, each analog output must be externally powered.
- Review the information in Pressure compensation input options (page 23) and make sure that you are using a pressure compensation input source that matches the settings of your MGP241 probe.
- Inspect the probe for any possible damage or dirt that could compromise the leak tightness of the device.
- If you install MGP241 to the process using a ball valve, note that it is necessary to use a 2 in ball valve and a reducer in order to accommodate the probe head (diameter 1.58 in).

The NPT threads of the probe can have sharp edges. To avoid injury when touching the threads, wear protective gloves.

The probe can cause a foot injury if dropped. To avoid foot injuries, wear protective shoes.

3.1.3 MGP241 dimensions

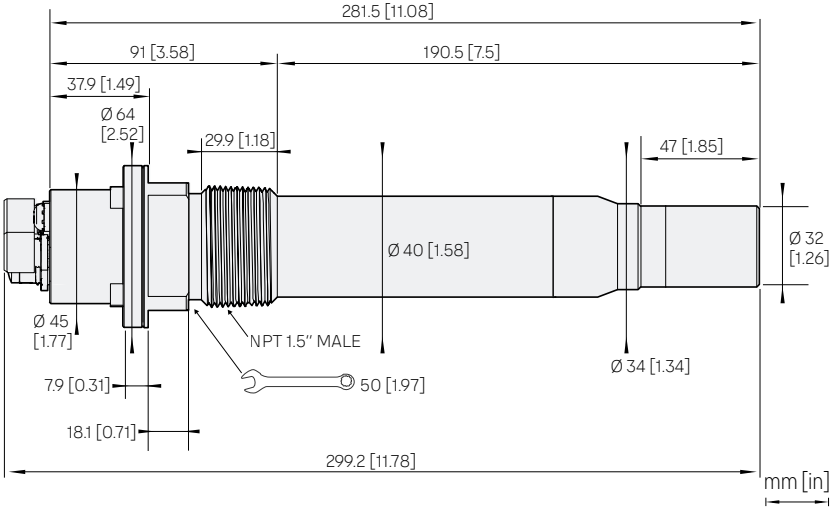

Figure 6 MGP241 dimensions

3.1.4 Recommended installation position on pipeline

Install the probe in a straight run of pipeline, ≥ 5 pipe diameters downstream of the closest bend or other feature affecting gas flow, and ≥ 2 pipe diameters upstream to the next bend or similar feature. For best results, use the orientation and installation depth of Figure 8 (page 26).

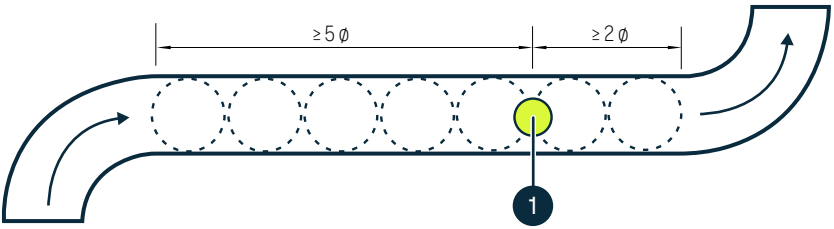

Figure 7 Recommended MGP241 installation position on pipeline

1 Recommended MGP241 installation position on pipeline.

3.1.5 Gas safety during installation

CAUTION! To avoid compromising the leak tightness of the installation:

- Ensure that the thread type of the installation port is 1.5 in female NPT. If unsure, verify the thread type with the 1.5 in NPT thread test plug.
- Apply PTFE tape to the 1.5 in male NPT thread of the probe as instructed in Installing the probe (page 23), and make sure that the PTFE tape seal has not been damaged by rotating the probe open (counter-clockwise) in the installation port.

3.1.6 Pressure compensation input options

Accurate measurement readings require compensating for the pressure of the measured process. MGP241 does not measure pressure, meaning that it is mandatory to set up a pressure compensation input source. The following pressure input options are available:

- Pressure measurement received from a Modbus client through a serial line connection.
- Pressure measurement received from an external pressure measurement instrument through the M12 4-pin female connector.
  - The external pressure instrument connected to MGP241 must output 4–20 mA and use absolute pressure units. The default range for the input is 1–1.6 bar (absolute).
- If the process pressure is constant, a fixed pressure compensation value can be configured into use.

The pressure compensation input settings (for example, input type selection and input scaling) of MGP241 must match the pressure input source used in your application.

More information

- Environmental compensation overview (page 43)
- Pressure compensation (page 43)

3.2 Installing the probe

- Adjustable wrench (or a similar suitable tool) for turning the tightening nut
- PTFE tape (wide) for the probe threads

NOTICE! The correct thread type in which to install MGP241 is **1.5 in female NPT**. Installing into any other thread type can damage the equipment and compromise the leak tightness of the connection. If unsure, verify the thread type with the NPT 1.5 in thread test plug.

When you use a ball valve to install MGP241, it is necessary to use a 2 in ball valve and a reducer in order to accommodate the probe head (diameter 40 mm (1.58 in)).

1. Inspect the probe threads and remove any possible dirt.
2. Wrap PTFE tape in the direction of the thread spiral, starting from the first thread. Keep the edge of the tape parallel to the face of the thread while wrapping.

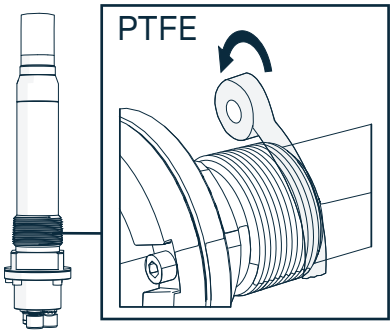

Do not tape beyond the edge of the threads or leave loose tape hanging.

3. Insert the probe into the **1.5 in female NPT** installation port and rotate it clockwise until it sits firmly in the port. Do not tighten the probe to full tightness, only enough to keep it securely in place when wiring.

> An external pressure measurement instrument is shown here as an example of pressure compensation input options: for a description of alternative options, see Pressure compensation input options (page 23).

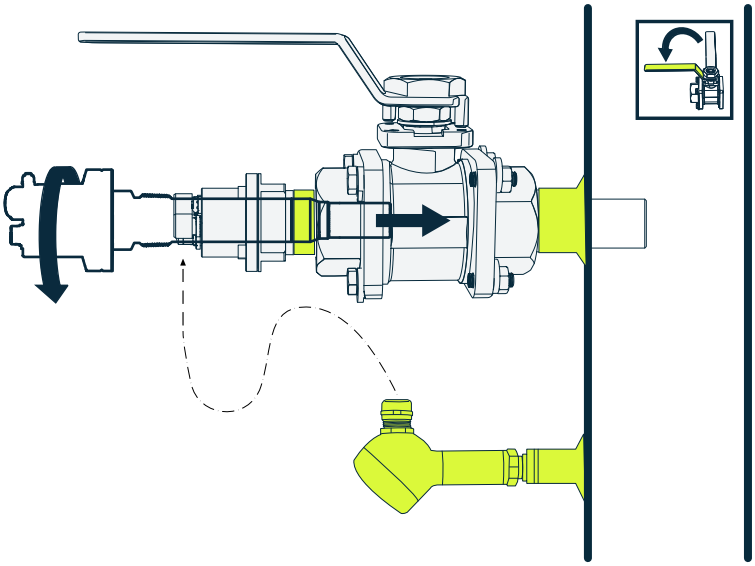

> **NOTICE!** Rotating the probe open (counter-clockwise) after it has been installed into the port can tear the PTFE tape. Only adjust the position of the probe in the installation port by tightening (rotating clockwise).

4. Connect input, output, and power supply cables to the cable connectors as required in your application.
5. See Finalizing installation (page 32) for instructions on attaching grounding to the probe grounding point.

More information

- Installation into threaded port (page 26)
- Ball valve installation (page 27)
- Flow-through adapter installation (page 28)

3.2.1 Installation into threaded port

You can install the MGP241 probe in a threaded port on the process pipeline.

An external pressure measurement instrument (item **5**) is shown as an example of pressure compensation input options. For a description of alternative pressure compensation options, see Pressure compensation input options (page 23).

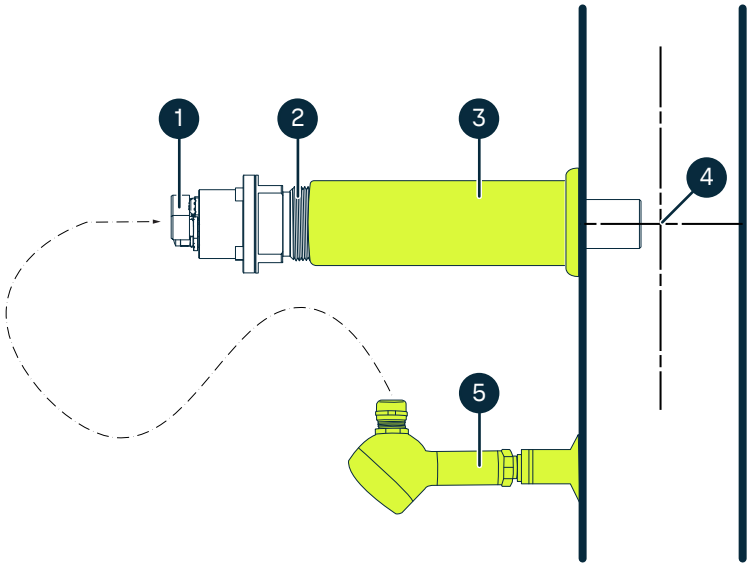

Figure 8 MGP241 threaded port installation example with recommended orientation and depth

1. External pressure or temperature sensor input wiring: use the M12 4-pin female connector. Power supply input, and RS-485 communication wiring: use the M12 5-pin male connector. Standard analog output, and power supply input: use the M12 8-pin male connector.
2. 1.5 in male NPT thread on MGP241: **never install to any other thread type than 1.5 in female NPT**.
3. Threaded installation port with 1.5 in female NPT thread on the process pipe.
4. For best results, install MGP241 horizontally. The recommended position for the tip of the filter is within 1/3 of the pipe's diameter from the pipe centerline. If this is not achievable, other positions inside the pipe can be used as well. In smaller pipes, the installation depth can be adjusted by using an adapter such as a ball valve.
5. Example pressure compensation input option: an external measurement instrument connected to the MGP241 input terminals.

More information

- Recommended installation position on pipeline (page 22)

3.2.2 Ball valve installation

You can use a ball valve to install MGP241.

An external pressure measurement instrument (item **5**) is shown as an example of pressure compensation input options. For a description of alternative pressure compensation options, see Pressure compensation input options (page 23).

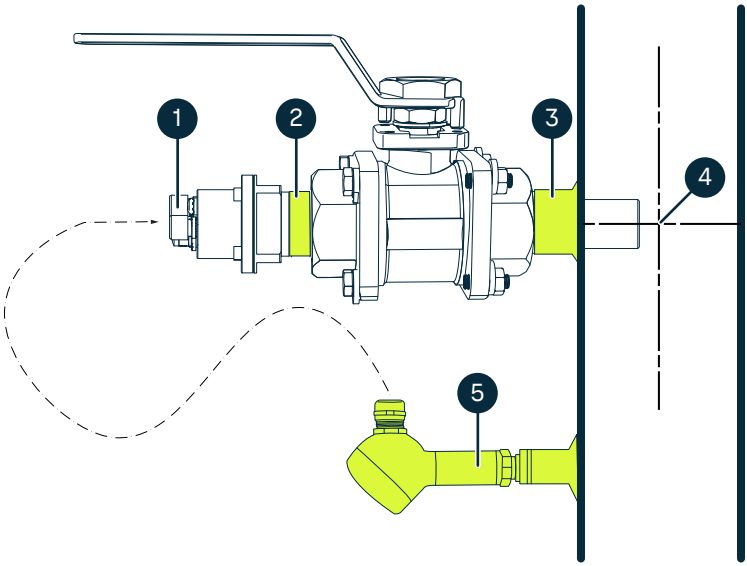

Figure 9 MGP241 ball valve installation example with recommended orientation and depth

1. External pressure or temperature sensor input wiring: use the M12 4-pin female connector. Power supply input, and RS-485 communication wiring: use the M12 5-pin male connector. Standard analog output, and power supply input: use the M12 8-pin male connector.
2. 1.5 in male NPT thread on MGP241: **never install to any other thread type than 1.5 in female NPT**. When you use a ball valve to install MGP241, it is necessary to use a 2 in ball valve with a 1.5 in thread reducer in order to accommodate the probe head (diameter 1.57 in).
3. Threaded stub welded to the pipe wall for ball valve process connection.
4. For best results, install MGP241 horizontally. The recommended position for the tip of the filter is within 1/3 of the pipe's diameter from the pipe centerline. If this is not achievable, other positions inside the pipe can be used as well. In smaller pipes, the installation depth can be adjusted by using an adapter such as the ball valve in this example.
5. Example pressure compensation input option: an external measurement instrument connected to the MGP241 input terminals.

When you use a ball valve to install MGP241, it is necessary to use a 2 in ball valve and a reducer in order to accommodate the probe head (diameter 40 mm (1.58 in)).

More information

- Recommended installation position on pipeline (page 22)

3.2.3 Flow-through adapter installation

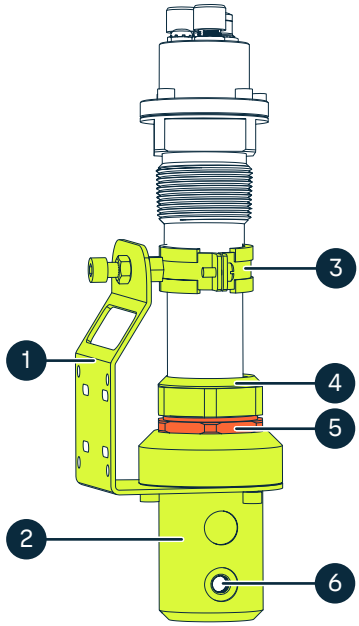

You can install MGP241 with an flow-though adapter accessory (Vaisala order code: 258877).

Figure 10 MGP241 in flow-through adapter 258877

1 Mounting plate (attach to mounting surface with screws or ties)
2 Gas tube inlet port, G 1/8 (on the other side of the adapter)
3 Clamp with 2 screws
4 Probe gland tightening nut
5 Probe gland locknut: **do not turn**
6 Gas tube outlet port, G 1/8

More information

- Recommended installation position on pipeline (page 22)

3.3 Wiring

WARNING! Make sure that you prepare and connect only de-energized wires.

CAUTION! Always choose a power supply unit that conforms to local standards and requirements, and device input specifications. The specified device power supply voltage range must never be exceeded. For MGP241 specifications, see MGP241 specifications (page 55).
Note that approved power supplies may have output limits that exceed the device input specification. Ensure that the power supply you are using is providing power according to the device input specification.

CAUTION! Canada: Only connect the device to the output of an approved power supply that meets either of the following requirements:

- An approved Class 2 power supply (certified to CAN/CSA-C22.2 No. 223, or both CAN/CSA C22.2 No. 66.1 and CAN/CSA C22.2 No. 66.3). The output of this power supply may not exceed 100 VA, with the operating voltage not more than 30 V rms, 42.4 V peak, or 60 V DC.
- A limited power supply (LPS) certified to CAN/CSA-C22.2 No. 60950-1. The output of this power supply may not exceed 100 VA, with the operating voltage not more than 30 V rms, 42.4 V peak, or 60 V DC.

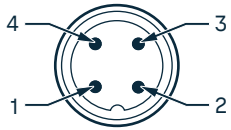

Figure 11 M12 4-pin A-coded female connector pinout

Pin #	Function	Notes	Wire colors in Vaisala cables
1	Analog input +	4–20 mA, isolated, for external pressure or temperature sensor	Brown
2	Not connected		White
3	Analog input -	4–20 mA, isolated, for external pressure or temperature sensor	Blue
4	Not connected		Black

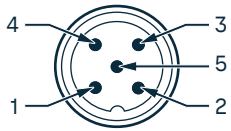

Figure 12 M12 5-pin A-coded male connector pinout

Pin #	Function	Notes	Wire colors in Vaisala cables
1	Voltage supply +	Operating voltage: 19–30 V Current consumption: 80 mA typical, 500 mA max.	Brown
2	RS-485 -		White
3	Voltage supply -		Blue
4	RS-485 +		Black
5	RS GND		Gray

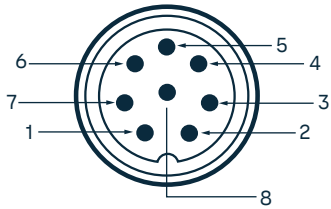

Figure 13 M12 8-pin A-coded male connector pinout

Pin #	Function	Notes	Wire colors in Vaisala cables
1	Analog output 1 +	Loop power voltage: 19–30 V [1)]	White
2	Analog output 3 -		Brown
3	Analog output 1 -		Green
4	Analog output 2 +	Loop power voltage: 19–30 V [1)]	Yellow
5	Analog output 2 -		Gray
6	Analog output 3 +	Loop power voltage: 19–30 V [1)]	Pink
7	Voltage supply +	Operating voltage: 19–30 V	Blue
8	Voltage supply -		Red or shield

1) *In addition to the power supply input for the probe, each analog output must be externally powered. See Wiring examples (page 31).*

3.3.1 Wiring examples

Figure 14 (page 31) shows a wiring example with a Vaisala cable when using separate loop-powering and galvanic isolation of analog outputs.

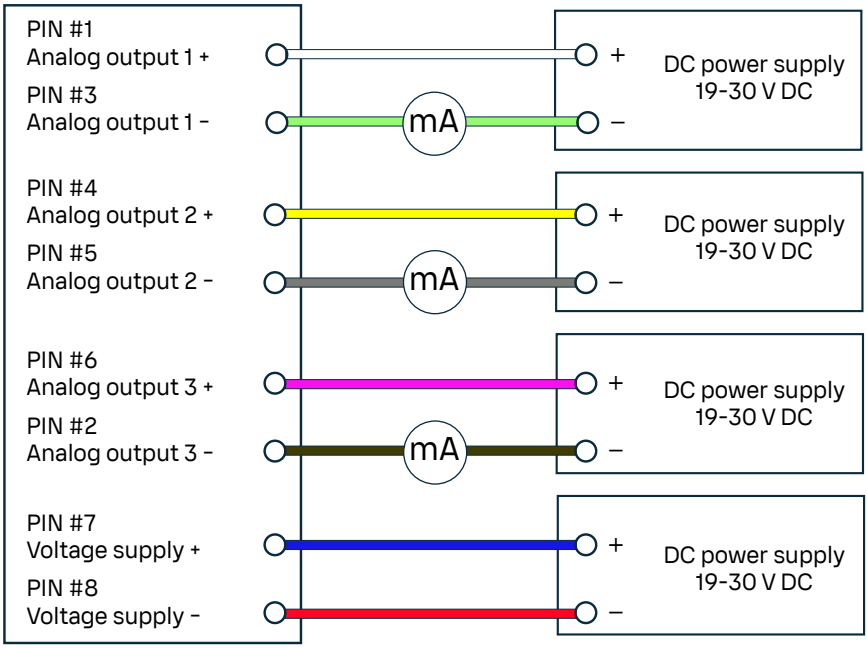

Figure 14 Wiring with Vaisala cable, separate loop-powering and galvanic isolation of analog outputs

Figure 15 (page 32) shows a wiring example when using 2 power supplies with common loop-powering and galvanic isolation of analog outputs.

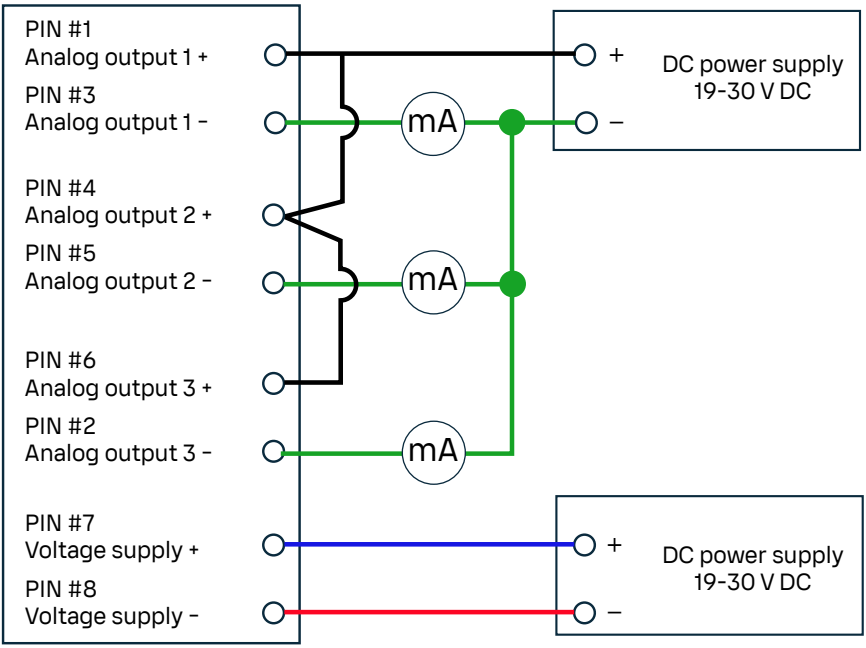

Figure 15 Wiring with 2 power supplies, common loop-powering and galvanic isolation of analog outputs

3.4 Finalizing installation

- Allen key (3 mm)
- Grounding screw set (screw, washer, ring terminal), provided
- $\geq 4\ mm^2$ wire

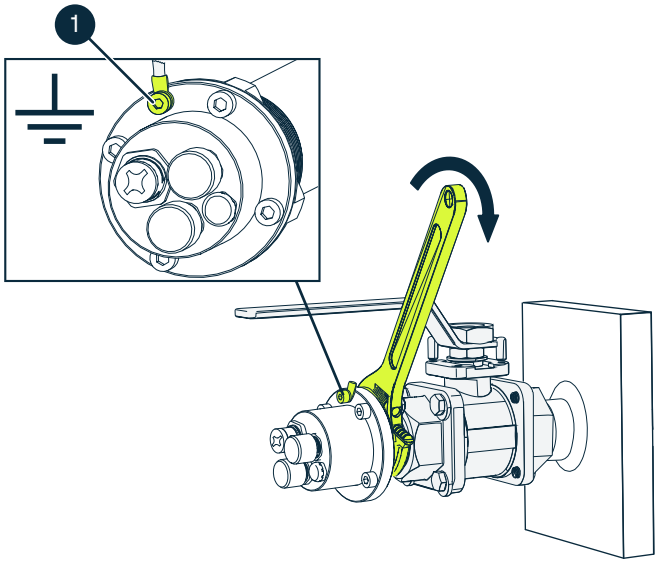

1 Probe grounding point

1. Attach the mounting screw set to the probe grounding point. The correct order for the mounting screw set installation is ring terminal, washer, and screw. Tightening torque for the screw is 3 Nm.
2. Connect the MGP241 grounding point to the grounding rail of the installation site with a $\geq 4\ mm^2$ wire. Attach the wire to the ring terminal and press the terminal shut tightly.
3. Switch on the power supply input.

4. Using probe with Insight PC software

4.1 Vaisala Insight PC software

Vaisala Insight PC software is a configuration and calibration software for Vaisala devices. Insight is available for the Windows operating system (64-bit only). For a full list of supported operating system versions, see vaisala.com/insight.

With Insight, you can:

- See device information and status.
- See real-time measurement data.
- Configure serial communication settings, analog input and output parameters and scaling, and environmental compensations.
- Calibrate and adjust the device.
- Perform short-term data logging for laboratory testing or evaluation purposes, for example.

To ensure support for your device, download the latest version of Insight at vaisala.com/insight.

The probe can be connected to Insight using a Vaisala USB cable (item code 242659).

4.1.1 Insight software user modes

You can switch between the **Basic mode** and **Advanced mode** user modes in the **Settings** menu.

Depending on the connected device, switching to **Advanced mode** may provide access to additional configuration options. Use these options only as described in the product documentation or as instructed by Vaisala support.

4.2 Connecting to Insight software

- Computer with Vaisala Insight software installed
- USB service cable (item code 242659)

When connecting several devices at the same time, note that your computer may not be able to supply enough power through its USB ports. Use an externally powered USB hub that can supply >2 W for each port.

1. Open the Insight software on your computer.
2. Connect the USB cable to a free USB port on the PC.
3. Connect the USB cable to the M12 5-pin connector of the probe.
4. Wait for Insight software to detect the probe.

4.3 Insight main view

Figure 16 Insight main menu and settings

1 Select ⚙ to access Insight main menu.
   - **Configure Device**: environmental compensation settings, analog input and output settings, and Modbus configuration.
   - **Export Settings**: creates a text file export of the device settings.
   - **Calibrate**: options for calibrating and adjusting carbon dioxide, and water vapor output, viewing adjustment data, and restoring factory adjustments.
   - **Communication**: contains a quick access selection for restarting the device.
   - **Factory default settings**: restores the probe back to default settings, clears any user adjustments and restores the latest factory calibration.
   - **About Device**: general device information such as serial number and software version.
2 Select **Settings** to switch between the **Basic Mode** and **Advanced Mode** user modes, change the units of parameters (metric/non-metric), enter a factory code to access restricted functionalities, or view information about the Insight software.
3 **Monitoring** provides options for monitoring and recording selected parameters, and exporting the monitoring data as a CSV (comma-separated values) file.
4 Device information menu with the following tabs:
   - **Measurements**: measurement graph view with parameter drop-down selection.
   - **Calibration information**: read-only information about the latest stored calibration.
   - **Diagnostics**: troubleshooting and administrative information about the device status.

5. Using probe with Indigo transmitters

5.1 Using probe with Indigo transmitters

MGP241 can be connected to Vaisala Indigo300 transmitter and Indigo520 transmitter.

With MGP241 connected to the Indigo520 transmitter, you can:

- See device information and status.
- See real-time measurement data.
- Configure the device features and settings:
  - Adjust analog output and input.
  - Change output parameters.
  - Change environmental compensation settings.
- Log measurement data from the probes connected to the transmitter.
- Calibrate and adjust the device.

With MGP241 connected to the Indigo300 transmitter, you can:

- See device information and status.
- See real-time measurement data.

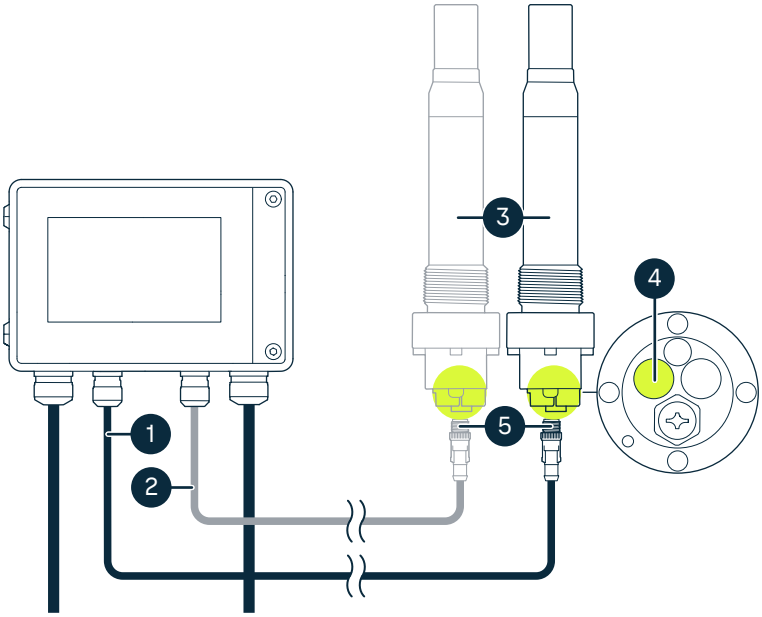

Figure 17 Connecting MGP241 probe to Indigo520 transmitter

1 Connection cable, probe 1
2 Connection cable, probe 2
3 MGP241 can be connected either as probe 1 or probe 2
4 Cable connector (M12 5-pin A-coded male)
5 The connector of the connection cable (M12 5-pin A-coded female)

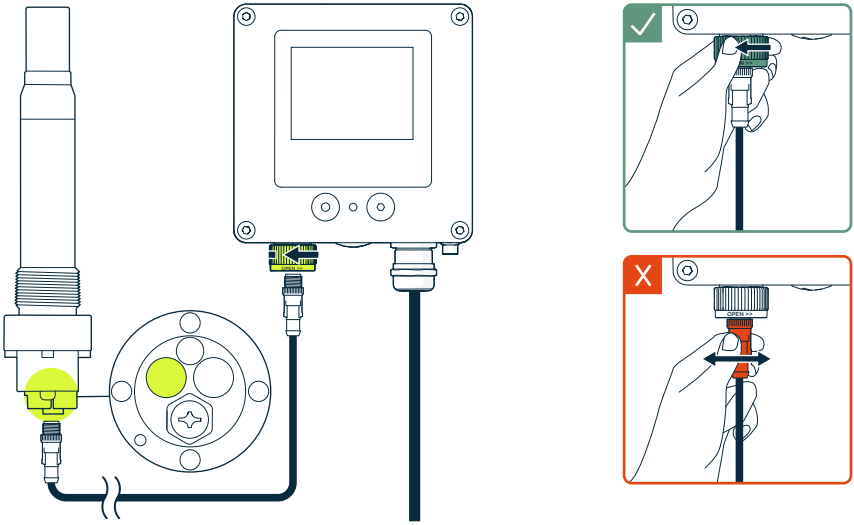

Figure 18 Connecting MGP241 probe to Indigo300 transmitter

1 Probes are locked in place with the locking wheel. **Never turn from the probe body.**
2 Probe connection cables are connected in the same way as probes: insert the cable in the connector and hold in place while turning the locking wheel.

For more information on using your Indigo host device, see your device's user documentation at docs.vaisala.com.

6. Analog output configuration

6.1 Analog output configuration overview

The MGP241 probe has 3 scalable 4–20 mA analog output channels. Each output has the following configuration options:

- Output parameter selection
- Output scale low end and high end
- Clipping and error limits
- Error output level

The configuration of the outputs (output parameter selection and scaling) is selected when ordering the probe, and can be changed with Modbus or Vaisala Insight PC software.

6.1.1 Default parameter configuration of output channels

The analog output channels of MGP241 have been set to a default parameter configuration. You can change the configuration of the analog outputs with Vaisala Insight PC software or Modbus.

Table 4 Analog output default parameter configuration

MGP241 analog output channel	Default parameter
Channel 1 (CH1)	Carbon dioxide (CO_2)
Channel 2 (CH2)	Water concentration (H_2O)
Channel 3 (CH3)	Retransmission of 4–20 mA input

6.1.2 Default analog output configuration with Indigo transmitters

When you connect the probe to an Indigo transmitter for the first time, the following analog output values per output parameter are used for automatic analog output configuration. Automatic analog output configuration requires that there are no existing analog configurations on the Indigo transmitter. Refer to transmitter-specific user instructions for further information.

Note that the MGP241 parameters are set to the transmitter in the order they are presented here. The number of parameters that can be shown in an Indigo transmitter at one time varies between different transmitter models.

Table 5 Default analog output configuration per output parameter

Output parameter	Output unit	AOUT min	AOUT max
CO_2 wet	ppmv	0	1000000
H_2O wet	ppmv	0	1000000
Td	°C	-20	100

6.2 Configuring analog outputs with Insight

You can configure the measurement parameter sent on each analog output, the scaling of the parameter, clipping and error limits, and the error output level. All 3 outputs have the same configuration options.

In addition to measurement parameter output, you can also configure an analog output to send the current value (mA) of the analog input channel.

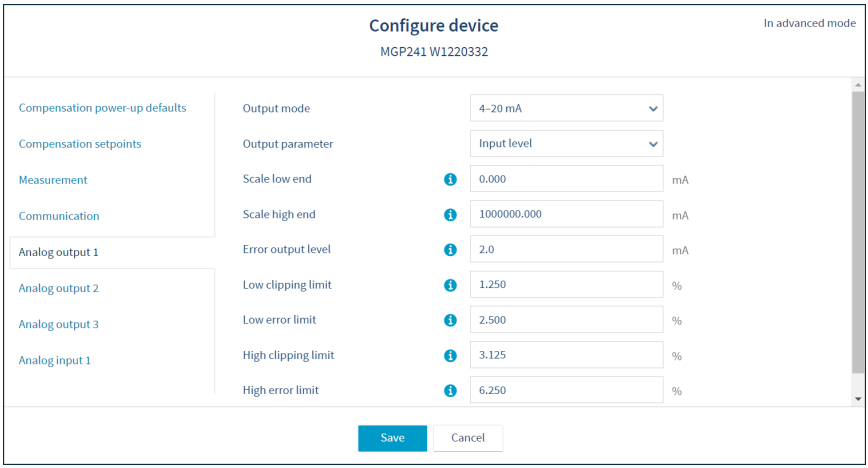

Figure 19 Analog output configuration options in Insight

1. Connect to Insight.
2. Select ⚙ **> Configure device**, and then one of the 3 analog outputs.
3. Select the measurement parameter that is sent on the output channel you are configuring, set the scaling for the output, define clipping and error limits, and set the output level that indicates an error.
4. Store the selections with **Save** and exit with **Cancel**.

5. Repeat the configuration for each output (analog outputs 1, 2, and 3) as required.

More information

- Connecting to Insight software (page 34)

7. Environmental compensation

7.1 Environmental compensation overview

When necessary, environmental compensations can be applied to improve the measurement accuracy (for example, to provide the probe with a real-time pressure reading from the measurement environment by using input from an external sensor).

The probe can compensate for the effects of the following parameters:
- Temperature (°C)
- Pressure (hPa)

Environmental compensation parameters can be provided to the probe from the following sources:
- The internal temperature sensor of the probe can be used for temperature compensation.
- An external sensor can be connected to the probe (4–20 mA analog input) to provide temperature or pressure compensation values.
- If the temperature and pressure values are known and remain constant, they can be entered as fixed setpoint values.
- If the probe is integrated in a system that measures either temperature or pressure, they can be updated to the probe continuously.

The method used for environmental compensation is configured on the order form when ordering the probe, and can later be updated using Vaisala Insight PC software or Modbus protocol.

More information

- Pressure compensation input options (page 23)
- Configuring environmental compensations with Insight (page 44)

7.1.1 Temperature compensation

MGP241 can measure the approximate temperature of the CARBOCAP® sensor for compensation, use a fixed setpoint value as the temperature compensation, or receive the temperature compensation value from an external temperature sensor.

Unless a dedicated temperature measurement is available and can be regularly updated to the probe, it is strongly recommended to use the probe's internal temperature compensation to ensure real-time accurate measurements. If the measurement is made in a constant temperature, the constant temperature can be set as the compensation value (fixed setpoint option).

7.1.2 Pressure compensation

The probe does not have on-board pressure measurement. You can either configure a fixed setpoint value that is used as the pressure compensation, or set the probe to receive the pressure compensation value from an external pressure sensor.

NOTICE! The pressure compensation input must be set up in order to receive accurate measurements.

For pressure compensation, the recommended option is to receive the pressure measurement from an external pressure measurement instrument through M12 4-pin female connector of the probe.

When using an external pressure sensor to provide the pressure compensation values to MGP241, note the following requirements:

- The external pressure instrument connected to MGP241 must output 4–20 mA and use absolute pressure units. The default range for the input is 1–1.6 bar (absolute).
- The analog input settings of MGP241 must be configured to match with the connected external pressure instrument.

More information

- Pressure compensation input options (page 23)

7.2 Configuring environmental compensations with Insight

Using Insight, you can configure the following temperature and pressure compensation settings:

- Temperature or pressure compensation mode (select the source where the compensation value is received from)
- The setpoint values for temperature or pressure compensation
- The scaling of the analog input channel (**Analog input 1**) that is used to receive temperature or pressure values from an external sensor.

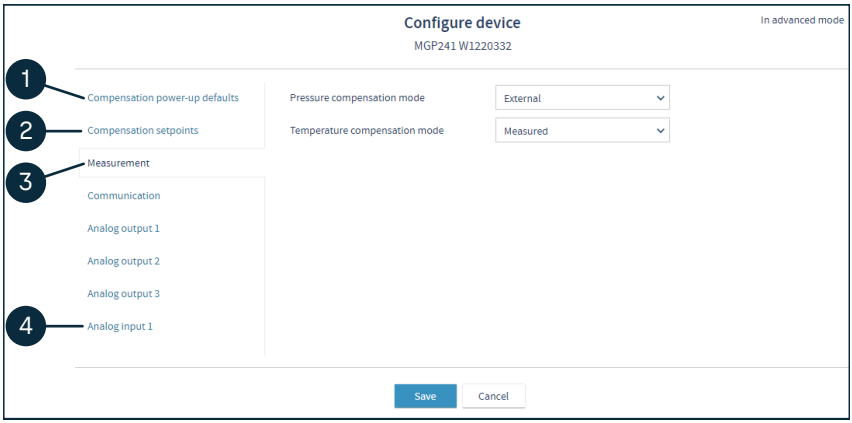

Figure 20 **Configure device** view in Insight PC software

1 **Compensation power-up defaults**: configure the setpoint compensation values that are taken into use at device reset. Used when the temperature or pressure compensation mode is set as **Setpoint**.
2 **Compensation setpoints**: configure the temporary setpoint compensation values that are in use while the device is powered on, but revert back to power-up defaults when the device is reset. Used when the temperature or pressure compensation mode is set as **Setpoint**.
3 **Measurement**: configure the pressure and temperature compensation modes (available options: **Setpoint**, **External**, **Measured** (temperature only), and **Off**.
4 **Analog input 1**: configure the input from the external pressure or temperature sensor (used when the pressure or temperature compensation mode is set as **External**).

The external pressure instrument connected to MGP241 must output 4–20 mA and use absolute pressure units. The default range for the input is 1–1.6 bar (absolute). Note that the pressure unit used in Insight is hPa. The default input scale for the external pressure instrument is 0–1.6 bar (absolute), which corresponds to 0–1600 hPa.

You can receive the compensation value from an external sensor for only one parameter (temperature or pressure) at a time.

1. Connect to Insight.

2. Select ⚙ **> Configure Device > Measurement**, and choose one of the following options:

   - To set the internal temperature measurement of the probe as the temperature compensation source, in **Temperature compensation mode**, select **Measured**, and then select **Save**.
   - To use an external sensor for temperature or pressure compensation, set the compensation mode of one the compensation parameter (temperature or pressure) as **External**, and then select **Save**. Open the **Analog input 1** tab and configure the scaling of the external sensor input.
   - To configure a fixed setpoint value for pressure or temperature compensation, set the compensation mode of the compensation parameter (temperature, pressure, or both) as **Setpoint**, and then select **Save**. Open the **Compensation setpoints** menu, enter the setpoint value in the text field, and select **Save** when done.

     Note that the setpoint value you enter in the **Compensation setpoints** is temporary and resets back to the power-up default at device reset.

     If you want to keep the setpoint value in use also after device reset, enter the same value in the **Compensation power-up defaults** menu and store the setting by selecting **Save**.

More information

- Connecting to Insight software (page 34)

7.2.1 Configuring analog input from external analog pressure or temperature sensor

When you set either the **Temperature compensation mode** or **Pressure compensation mode** to use measurement from an **External** sensor, you can configure the scale of the external sensor input in the **Analog input 1** tab.

The **Input mode** and **Input parameter** selections are set automatically based on the external compensation parameter selection.

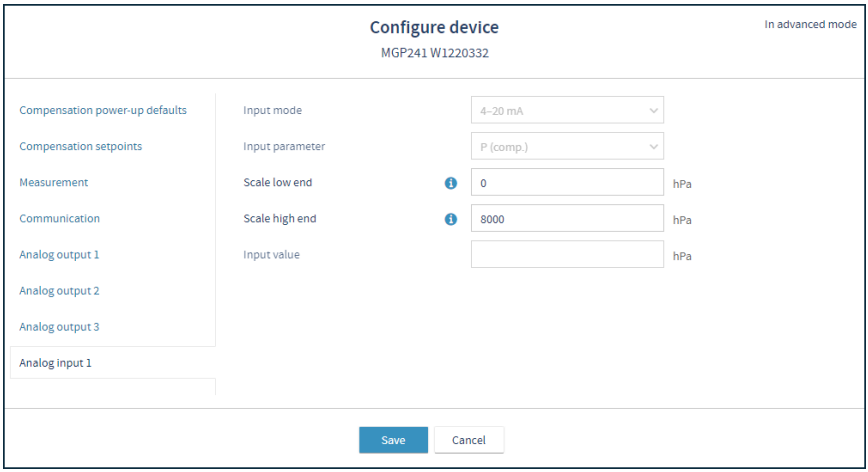

Figure 21 **Analog input 1** configuration view in Insight

1. In the **Measurement** menu, set either the pressure or temperature compensation mode as **External** to use input from a connected sensor.

> You can receive the compensation value from an external sensor for only one parameter (temperature or pressure) at a time.

2. Select **Save**.
3. In the **Analog input 1** tab, enter the scaling for the temperature or pressure input from the external sensor.

> The external pressure instrument connected to MGP241 must output 4–20 mA and use absolute pressure units. The default range for the input is 1–1.6 bar (absolute). Note that the pressure unit used in Insight is hPa. The default input scale for the external pressure instrument is 0–1.6 bar (absolute), which corresponds to 0–1600 hPa.

4. Select **Save**.

7.2.2 Sending analog input channel value from an analog output channel

In addition to measurement parameter output, you can also configure an analog output to send the current value (mA) of the analog input channel.

1. Connect to Insight.
2. Select ⚙ **> Configure device**, and then one of the 3 analog outputs.
3. In **Output parameter**, select **Input level**.
4. Store the selection with **Save**.
5. Repeat the configuration for each output (analog outputs 1, 2, and 3) as required.

8. Calibration

8.1 Calibration overview

The recommended calibration interval for the MGP41 probe is 1 year.

To reach the best calibration and adjustment accuracy, it is recommended to use the traceable calibration and adjustment services provided by Vaisala.

The carbon dioxide (CO_2) measurement of MGP241 can be calibrated and adjusted using gas references with known values. You can also calibrate and adjust the probe's internal temperature measurement (used for environmental compensation only). The H_2O measurement can only be adjusted at the low end (simultaneously with CO_2 when a zero point adjustment is made).

Carrying out calibrations and adjustments requires connecting MGP241 to Vaisala Insight PC software with Vaisala USB cable 242659.

To feed reference gases to MGP241 in a controlled manner when calibrating and adjusting, use a flow-through adapter. An MGP241 flow-through adapter is available as an optional accessory.

The following calibration and adjustment options are available when the probe is connected to Vaisala Insight PC software:

- Carbon dioxide (CO_2) measurement calibration and adjustment (1-point or 2-point adjustments)
- Temperature measurement adjustment (probe's internal sensor measurement used only for environmental compensation)
- Zero point adjustment for all gas measurement parameters (CO_2, and H_2O: adjusts all parameters simultaneously). Zero point adjustment replaces the low end adjustment of all gas parameters in 2-point adjustments
- Reset to factory adjustment (given separately for each parameter)

The accuracy of field calibration and adjustment is dependent on a number of factors such as sufficient stabilization time, calibration setup conditions, and reference quality. To ensure fully accurate calibration and adjustment results, use the traceable calibration and adjustment services provided by Vaisala.

8.1.1 Compensation mode during calibration

When you start to calibrate the probe with Insight, the probe enters calibration mode, and the compensation mode is automatically switched to **Setpoint**. In this compensation mode, you must enter the conditions of your calibration environment as temporary setpoint values in the **Compensation setpoints** tab of the calibration menu.

When you exit calibration mode, the values you have entered in the **Compensation setpoints** tab remain in use as the current setpoint values, but the compensation mode switches back to the selection that was in place before starting calibration (either **Off**, **Setpoint**, **Measured**, or **External**).

8.2 Calibration and adjustment with Insight PC software

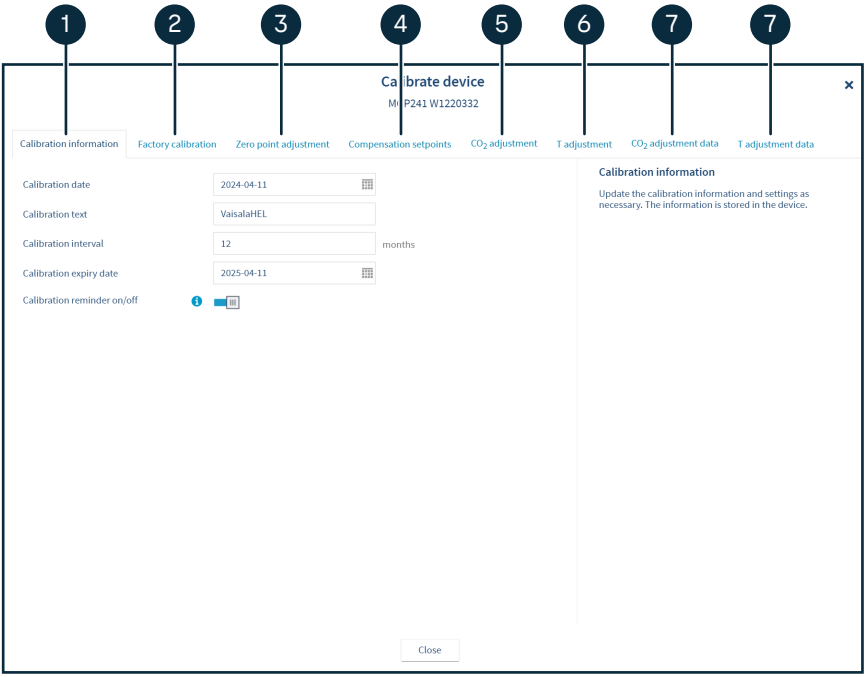

Figure 22 Calibration menu in Insight PC software

1 Calibration information: enter information about the latest calibration (date, text description) in this tab. Also includes the calibration interval and calibration reminder selections.
2 Factory calibration: shows read-only information about the factory calibration.
3 Zero point adjustment: adjusts the zero point signal (simultaneously for all gas measurement parameters). This adjustment replaces the low end adjustment in 2-point adjustments.
4 Compensation setpoint configuration for the calibration and adjustment environment.
5 Carbon dioxide (CO_2) measurement adjustment tab. In 2-point adjustments, use this tab for high end adjustment and the zero point adjustment for low end adjustment.
6 Temperature measurement adjustment tab.
7 Adjustment data tabs show the latest stored adjustment for each parameter.

1. Connect to Insight.
2. Select ⚙ **> Calibrate > Yes**.

3. Select one of the adjustment options in the **Calibrate** menu and see the separate instructions for each option.

More information

- Connecting to Insight software (page 34)

8.2.1 Zero point adjustment

The zero point adjustment adjusts the zero output signal of the probe and applies simultaneously to all gas measurement parameters (CO_2 and H_2O,). This means that instead of carrying out a 2-point adjustment for each gas measurement parameter separately using a low end and high end reference, the low end adjustment of all gas measurement parameters is replaced with the zero point adjustment.

After carrying out the zero point adjustment, you only need to adjust the high end measurement of each gas measurement parameter when carrying out a 2-point adjustment.

Always use nitrogen as the reference gas for the zero point adjustment.

1. Insert your device into the 0 % reference environment (nitrogen).
2. Wait for the signal level to stabilize. You can follow the stabilization from the graph and the numeric value shown above the graph.
3. After the signal level has stabilized, select **Start adjustment**.
4. Wait until Insight displays a notification about successful zero point adjustment activation. The adjustment typically takes 2-3 minutes.
5. The zero point adjustment is saved automatically after it has been successfully activated. To remove an incorrect adjustment, select **Restore factory adjustment**.
6. For a 2-point adjustment, carry out the high end adjustments for each measurement parameter in the separate adjustment tabs using appropriate references (for example 90 % CO_2).

8.2.2 Calibrating and adjusting carbon dioxide (CO_2) measurement

Prepare the calibration gases required to create the reference condition for the adjustment, and the setup for controlled calibration gas feed to the probe.

When making a 2-point adjustment, first carry out the zero point adjustment in the **Zero point adjustment** tab. The zero point adjustment replaces the low end adjustment in a 2-point adjustment.

1. Reset any possible existing adjustments with the **Restore factory adjustment** button. This prevents earlier adjustments from having an effect on the current adjustment.
2. Insert your device in the reference environment.
3. Before starting the adjustment, make sure that your environmental compensation settings are correct for your present environment. You can review and change the settings for pressure and temperature compensation setpoints in the **Compensation setpoints** tab.
4. Wait for the measurement (shown in the graph) to stabilize fully.
5. When the measurement has stabilized, click the **Reference value, point 1** text box and enter the known CO_2 level of the calibration point. Press **Enter** or click outside the text box when done.
6. Check that the measured value for point 1 is automatically inserted.
7. Check the difference between the reference and the measured value. Very large differences may be due to insufficient stabilization time or unsuitable calibration setup.
   a. If you want to apply the adjustment you have made, select **Activate adjustment**.
   b. To exit without taking the adjustment in use, select **Close**.
8. After completing the adjustment, update the information in the **Calibration information** tab.

8.2.3 Calibrating and adjusting temperature measurement

Prepare a temperature calibrator or similar to create a suitable reference condition.

> You can adjust temperature either in nitrogen or in air.

1. Insert your device in the reference environment.
2. Wait for the measurement (shown in the graph) to stabilize fully.
3. When the measurement has stabilized, click the **Reference value, point 1** text box and enter the known temperature of the calibration point. Press **Enter** or click outside the text box when done.
4. Check that the measured value for point 1 is automatically inserted.
5. Check the difference between the reference and the measured value. Very large differences may be due to insufficient stabilization time or unsuitable calibration setup.
   a. If you want to apply the adjustment you have made, select **Activate adjustment**.
   b. To exit without taking the adjustment in use, select **Close**.
6. After completing the adjustment, update the information in the **Calibration information** tab.

9. Modbus

9.1 Modbus

The probe can be accessed using the Modbus serial communication protocol. The supported Modbus variant is Modbus RTU (Serial Modbus) over RS-485 interface.

The preconfigured default Modbus serial settings are presented in the following table. Modbus communication settings can also be configured using Vaisala Insight PC software.

Table 6 Default Modbus serial communication settings

Description	Default value
Serial bit rate	19200
Parity	N
Number of data bits	8
Number of stop bits	2
Modbus device address	240

9.2 Configuring Modbus communication settings with Insight

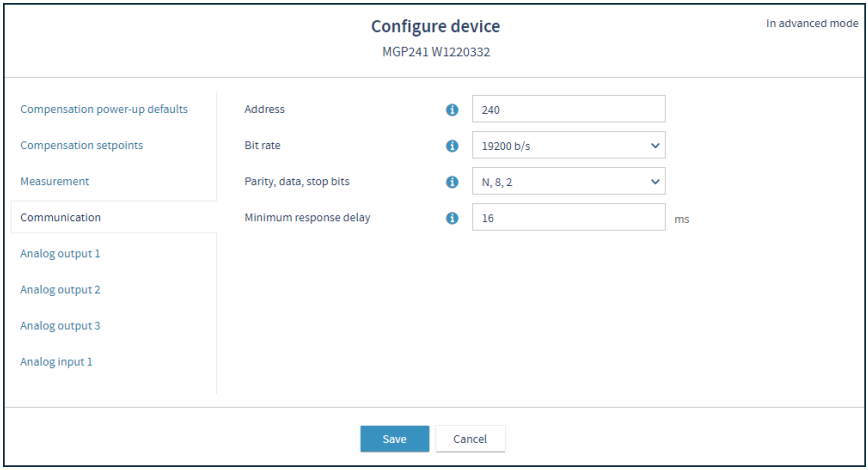

Figure 23 Modbus communication settings in Insight PC software

You can configure the following Modbus communication settings with Insight PC software:

- Device address
- Communication bit rate
- Parity, data bits, and stop bits
- Response delay

To configure the Modbus communication settings with Insight:

1. Connect to Insight and select ⚙ **> Configure Device > Communication**.
2. Enter the communication values as needed: see the instructions in the Insight interface for allowed ranges and additional information.
3. Select **Save** to store the settings.

10. Technical data

10.1 MGP241 specifications

Table 7 Measurement performance

Property	Carbon dioxide CO_2	Water vapor H_2O
Sensor	CARBOCAP®	CARBOCAP®
Measurement unit	Volume-%, ppm_v	Volume-%, ppm_v, dew point °C, dew point °F
Measurement range	0–100 vol-%	0–25 vol-%, –10 ... +60 °C (+14 ... +140 °F)
Accuracy at +25 °C (+77 °F) and 1013 mbar [1] [2]	0–90 vol-%: **±2 vol-%** 90–100 vol-%: **±1 vol-%**	0–25 vol-%: **±0.5 vol-%**
Repeatability [2]	±0.4 vol-% at 95 vol-%	±0.1 vol-% at 2.5 vol-%
Temperature dependence (typical)	Compensated, 0–100 vol-%: **±0.1 % of reading / °C**	Compensated, 0–25 vol-%: **±0.1 % of reading / °C**
	Uncompensated, 0–100 vol-%: **±0.6 % of reading / °C**	Uncompensated, 0–25 vol-%: **±0.4 % of reading / °C**
Pressure dependence (typical)	Compensated, 0–100 vol-%: **±0.015 % of reading / mbar**	Compensated, 0–25 vol-%: **±0.01 % of reading / mbar**
	Uncompensated, 0–100 vol-%: **±0.25 % of reading / mbar**	Uncompensated, 0–25 vol-%: **±0.20 % of reading / mbar**
Long-term stability	±2 vol-% / year	±2 vol-% / year
Startup time [3]	3 min	
Warm-up time [4]	30 s [5]	
Response time (T_{90})	90 s [6]	
Response time with flow-through adapter	90 s at ≥ 0.5 l/min [6] (recommended: 0.5–1 l/min)	

1) Excluding cross-interferences to other gases.

2) *Accuracy and repeatability specification at +25 °C (+77 °F) and 1013 mbar including non-linearity, calibration uncertainty, and repeatability; temperature and pressure compensated.*
3) *Time to first reading.*
4) *Time to specified accuracy.*
5) *At +20 °C (+68 °F) ambient temperature.*
6) *With standard PTFE filter.*

Table 8 Powering

Property	Description/Value
Operating voltage	19–30 V DC
Power consumption	Typical: 3 W Maximum: 6 W
Current consumption	100–300 mA

Table 9 Inputs and outputs

Property	Description/Value
Analog inputs	
Number of analog inputs	1
Input type	4–20 mA, isolated, for external pressure or temperature sensor [1)]
Analog outputs	
Number of analog outputs	3
Output type	4–20 mA, scalable, isolated
Accuracy	±0.2 % F.S. at 25 °C
Temperature dependence	±0.005% / °C full scale
External loads	R_L: 0 Ω R_L: 500 Ω
Digital communication	
Serial communication	RS-485 (Modbus RTU)

1) *The optional analog input is galvanically isolated and provides power for the connected external pressure sensor.*

Table 10 Mechanical specification

Property	Description/Value
Weight	1.4 kg (3.09 lb)

Property	Description/Value
Connectors	M12 5-pin male for digital output M12 8-pin male for analog output M12 4-pin female for analog input
Materials	
Probe body	AISI316L stainless steel, PPS
Filter cap	Sintered PTFE

Table 11 Operating environment

Property	Description/Value
Operating environment	Outdoor use
IP rating	IP65: Dust-tight. Protected from water jets from any direction.
Operating temperature	−40 ... +60 °C (−40 ... +140 °F)
Operating humidity	0–100 %RH
Operating pressure	−500 ... +500 mbar (gauge)
Storage temperature	−40 ... +60 °C (−40 ... +140 °F)
Storage humidity	0–90 %RH
Process pressure	−500 ... +500 mbar (gauge)
Process temperature	+0 ... +60 °C (+32 ... +140 °F)
Process flow	0–20 m/s

Table 12 Compliance

Property	Description/Value
EU directives and regulations	EMC Directive (2014/30/EU) REACH Regulation (EC 1907/2006) RoHS Directive (2011/65/EU) as amended by 2015/863
Electromagnetic compatibility (EMC)	EN 61326-1, industrial environment
Compliance marks	CE, China RoHS, FCC, ICES, RCM

Table 13 Compatible devices

Device or series	Models
Indigo80 Handheld Indicator	Indigo80
Indigo300 Transmitter	Indigo300
Indigo500 Series Transmitters	Indigo520

Table 14 Accessories and spare parts

Item	Order code
Sintered PTFE filter (includes O-ring)	DRW249919SP
Flow-through adapter	258877
NPT 1.5 in thread test plug	257525SP
USB Service Cable M12-5F, RS-485	242659
Connection cable, M12-5F, open wires (1.5 m (4.92 ft))	223263SP
Connection cable, M12-8F, open wires (10 m (32 ft 10 in))	216546SP
Connection cable, M12-5F, open wires (10 m (32 ft 10 in))	GMP343Z1000SP
Moulded cable, spare female plug (2 m (6.56 ft))	GMP343Z200SP
Moulded cable, spare female plug (2 m (6.56 ft))	GMP343Z600SP
Probe connection cable for Indigo transmitters, M12-open wires, 1 m (3 ft 3 in)	CBL210896-1MSP
Probe connection cable for Indigo transmitters, M12-open wires, 3 m (9 ft 11 in)	CBL210896-3MSP
Probe connection cable for Indigo transmitters, M12-open wires, 5 m (16 ft 5 in)	CBL210896-5MSP
Probe connection cable for Indigo transmitters, M12-open wires, 10 m (32 ft 10 in)	CBL210896-10MSP
Probe connection extension cable for Indigo transmitters, M12-M12, 1 m (3 ft 3 in)	INDIGOCABLE1M
Probe connection extension cable for Indigo transmitters, M12-M12, 3 m (9 ft 11 in)	INDIGOCABLE3M
Probe connection extension cable for Indigo transmitters, M12-M12, 5 m (16 ft 5 in)	INDIGOCABLE5M
Probe connection extension cable for Indigo transmitters, M12-M12, 10 m (32 ft 10 in)	INDIGOCABLE10M

10.2 Recycling instructions

These recycling instructions guide you on the end-of-life treatment of this Vaisala product. As waste regulations and infrastructure vary in each country, these instructions only indicate the different components to be separated and common ways to handle them. Always follow local requirements when disposing of the product. Vaisala encourages to use the best available recycling practices to minimize related environmental impacts.

Vaisala is committed to meeting the requirements of the EU Waste Electrical and Electronic Equipment (WEEE) Directive. This directive aims to minimize the impact of electrical and electronic goods on the environment, by increasing reuse and recycling, and reducing the amount of WEEE going to landfill. This symbol indicates that the product should be collected separately from other waste streams and treated appropriately.

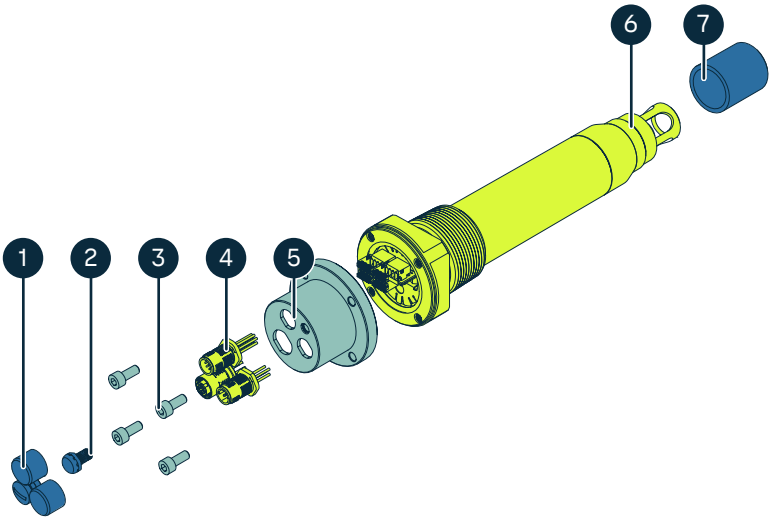

Recycling	Part	Material
Electrical and electronic waste	4, 6	Various
Metal waste	3, 5	Stainless steel
Plastic waste	1, 2	Polyamide 6
	7	Polytetrafluoroethylene (PTFE)

Appendix A. Modbus reference

A.1 Data encoding

In the data registers, the numeric values are available in one or two formats with separate register addresses: 32-bit IEEE floating point format and/or 16-bit signed integer format.

A.2 32-bit floating point or 32-bit integer format

Registers using **32-bit float** data format are encoded using the **binary32** encoding defined in IEEE 754. The format is also known as "single-precision floating point format".

The least significant 16 bits of a floating point number are placed at the Modbus register listed in the table, while the most significant 16 bits are placed in the register with number/address + 1, as specified in Open Modbus TCP Specification, Release 1.0. This is also known as "little-endian" or "Modicon" word order.

Despite the specification, some Modbus clients[1)] may expect a "big-endian" word order (most significant word first). In such case, you must select "word-swapped" floating point format in your Modbus client for the Modbus registers of the device.

A complete 32-bit floating point or 32-bit integer value should be read and written in a single Modbus transaction.

CAUTION! Reading the measurement data registers with incorrect floating point format setting may occasionally result in correct-looking, but nevertheless incorrect values.

It is highly recommended to verify that you have configured the floating point format correctly on your Modbus host system by reading a floating point value from a test value register.

A.3 16-bit integer format

Some 16-bit integer values in the data registers are scaled to include the necessary decimals. The scaling factors for those values are shown in the register tables.

1) *Formerly 'master'.*

Table 15 Interpretation of 16-bit signed integer values

Value (decimal)	Value (hexadecimal)	Description
0–32766	0x0000–0x7FFE	Value in range 0–32766
32767	0x7FFF	Value is 32767 or larger
32768	0x8000	Value is not available
32769	0x8001	Value is −32767 or smaller
32770–65535	0x8002–0xFFFF	Value in range −32766 ... −1 (2's complement)

A.4 Modbus registers

Registers are numbered in decimal, starting from 1. Register addresses in actual Modbus messages (Modbus Protocol Data Unit (PDU)) are in hexadecimal and start from zero. Register number 1 corresponds to address 0x0 in the actual Modbus message.

CAUTION! Reading the wrong register(s) may result in correct-looking values. Check the reference documentation of your Modbus host (PLC) to verify which notation it uses for Modbus register addresses.

A.4.1 Measurement data registers

Table 16 Modbus measurement data registers (read-only)

Register number (decimal)	Address (hexadecimal)	Register description	Data format	Unit
Floating point values				
5	0x0004	Carbon dioxide (CO_2) concentration	32-bit float	ppm_v
7	0x0006	Carbon dioxide (CO_2) concentration, dry basis	32-bit float	ppm_v
9	0x0008	Water (H_2O) concentration	32-bit float	ppm_v
11	0x000A	Water (H_2O) concentration, dry basis	32-bit float	ppm_v
13	0x000C	Dew point temperature	32-bit float	T_d °C
15	0x000E	Dew / frost point temperature	32-bit float	T_{df} °C

Register number (decimal)	Address (hexadecimal)	Register description	Data format	Unit
Floating point values				
17	0x0010	Sensor temperature	32-bit float	Ts °C
Integer values				
259	0x0102	Carbon dioxide (CO_2) concentration	16-bit integer	ppm_v / 100 (parts per ten thousand)
260	0x0103	Carbon dioxide (CO_2) concentration, dry basis	16-bit integer	ppm_v / 100 (parts per ten thousand)
261	0x0104	Water (H_2O) concentration	16-bit integer	ppm_v / 100 (parts per ten thousand)
262	0x0105	Water (H_2O) concentration, dry basis	16-bit integer	ppm_v / 100 (parts per ten thousand)
263	0x0106	Dew point temperature	16-bit integer (× 10)	T_{df} °C
264	0x0107	Dew / frost point temperature	16-bit integer (× 10)	T_{df} °C

A.4.2 Configuration registers

Table 17 Modbus configuration data registers (writable)

Register number (decimal)	Address (hexadecimal)	Register description	Data format	Valid range
Environmental compensation				
769	0x0300	Power-up value for pressure compensation	32-bit float	Range: 450–1550 hPa Init/default: 1013.25
771	0x0302	Power-up value for temperature compensation	32-bit float	Range: -10 ... +70 °C Init/default: 25

Register number (decimal)	Address (hexadecimal)	Register description	Data format	Valid range
Environmental compensation				
773	0x0304	Volatile pressure compensation (value cleared at probe reset)	32-bit float	Range 450–1550 hPa Init/default: 1013.25
775	0x0306	Volatile temperature compensation (value cleared at probe reset)	32-bit float	Range: -10 ... +70 °C Init/default: 25
Function control				
1281	0x0500	Pressure compensation mode selection	Enum	**0** = Off **1** = Setpoint **2** = External
1282	0x0501	Temperature compensation mode selection	Enum	**0** = Off **1** = Setpoint **2** = Measured **3** = External
Communication				
1537	0x0600	Serial address	16-bit integer	Valid range 1–255 Default: 240
1538	0x0601	Bit rate	Enum	Valid range 4800–115200 **4** = 4800 **5** = 9600 **6** = 19200 **7** = 38400 **8** = 57600 **9** = 115200 (default: **6** (19200))

Communication				
1539	0x0602	Parity, data, stop bits	Enum	**0** = N,8,1 **1** = N,8,2 **2** = E,8,1 **3** = E,8,2 **4** = O,8,1 **5** = O,8,2
1540	0x0603	Response delay	16-bit integer	Valid range 0–1000
1541	0x0604	Restart device	Function	
Analog output 1				
1793	0x0700	Analog output 1 mode selection	Enum	**0** = Disabled **1** = 4–20 mA
1794	0x0701	Analog output 1 measurement parameter selection. When written, scalings are reset.	Reg	0x0004 (CO_2 wet basis) 0x0006 (CO_2 dry basis) 0x0008 (H_2O wet basis) 0x000A (H_2O dry basis) 0x000C (T_d) 0x000E (T_{df})

Analog output 1				
1795	0x0702	Scale low end for analog output 1 measurement parameter. Minimum and maximum values vary for different parameters.	Float	Output parameters 0x0004 (CO_2 wet basis) 0x0006 (CO_2 dry basis): Minimum: 0 Maximum: 1000000
				Output parameters 0x0008 (H_2O wet basis) 0x000A (H_2O dry basis): Minimum: 0 Maximum: 250000
				Output parameters 0x000C (T_d) 0x000E (T_{df}): Minimum: -10 Maximum: 60

Analog output 1				
1797	0x0704	Scale high end for analog output 1 measurement parameter. Minimum and maximum values vary for different parameters.	Float	Output parameters 0x0004 (CO_2 wet basis) 0x0006 (CO_2 dry basis): Minimum: 0 Maximum: 1000000
				Output parameters 0x0008 (H_2O wet basis) 0x000A (H_2O dry basis) Minimum: 0 Maximum: 250000
				Output parameters 0x000C (T_d) 0x000E (T_{df}): Minimum: -10 Maximum: +60
1799	0x0706	Error output level (mA)	Float	Min. 0.5 mA Max. 24 mA
1801	0x0708	Low clipping limit	Float	0–2.5 %
1803	0x070A	Low error limit	Float	0–1025 %
1805	0x070C	High clipping limit	Float	0–12.5 %
1807	0x070E	High error limit	Float	0–1025 %
Analog output 2				
2049	0x0800	Analog output 2 mode selection	Enum	**0** = Disabled **1** = 4–20 mA

Analog output 2				
2050	0x0801	Analog output 2 measurement parameter selection. When written, scalings are reset.	Reg	0x0004 (CO_2 wet basis) 0x0006 (CO_2 dry basis) 0x0008 (H_2O wet basis) 0x000A (H_2O dry basis) 0x000C (T_d) 0x000E (T_{df})
2051	0x0802	Scale low end for analog output 2 measurement parameter. Minimum and maximum values vary for different parameters.	Float	Output parameters 0x0004 (CO_2 wet basis) 0x0006 (CO_2 dry basis): Minimum: 0 Maximum: 1000000
				Output parameters 0x0008 (H_2O wet basis) 0x000A (H_2O dry basis): Minimum: 0 Maximum: 250000
				Output parameters 0x000C (T_d) 0x000E (T_{df}): Minimum: -10 Maximum: +60

Analog output 2				
2053	0x0804	Scale high end for analog output 2 measurement parameter. Minimum and maximum values vary for different parameters.	Float	Output parameters 0x0004 (CO_2 wet basis) 0x0006 (CO_2 dry basis): Minimum: 0 Maximum: 1000000
				Output parameters 0x0008 (H_2O wet basis) 0x000A (H_2O dry basis): Minimum: 0 Maximum: 250000
				Output parameters 0x000C (T_d) 0x000E (T_{df}): Minimum: -10 Maximum: +60
2055	0x0806	Error output level (mA)	Float	Min. 0.5 mA Max. 24 mA
2057	0x0808	Low clipping limit	Float	0–2.5 %
2059	0x080A	Low error limit	Float	0–1025 %
2061	0x080C	High clipping limit	Float	0–12.5 %
2063	0x080E	High error limit	Float	0–1025 %
Analog output 3				
2305	0x0900	Analog output 3 mode selection	Enum	**0** = Disabled **1** = 4–20 mA

Analog output 3				
2306	0x0901	Analog output 3 measurement parameter selection. When written, scalings are reset.	Reg	0x0004 (CO_2 wet basis) 0x0006 (CO_2 dry basis) 0x0008 (H_2O wet basis) 0x000A (H_2O dry basis) 0x000C (T_d) 0x000E (T_{df})
2307	0x0902	Scale low end for analog output 3 measurement parameter. Minimum and maximum values vary for different parameters.	Float	Output parameters 0x0004 (CO_2 wet basis) 0x0006 (CO_2 dry basis): Minimum: 0 Maximum: 1000000
				Output parameters 0x0008 (H_2O wet basis) 0x000A (H_2O dry basis): Minimum: 0 Maximum: 250000
				Output parameters 0x000C (T_d) 0x000E (T_{df}): Minimum: -10 Maximum: +60

Analog output 3				
2309	0x0904	Scale high end for analog output 3 measurement parameter. Minimum and maximum values vary for different parameters.	Float	Output parameters 0x0004 (CO_2 wet basis) 0x0006 (CO_2 dry basis): Minimum: 0 Maximum: 1000000
				Output parameters 0x0008 (H_2O wet basis) 0x000A (H_2O dry basis): Minimum: 0 Maximum: 250000
				Output parameters 0x000C (T_d) 0x000E (T_{df}): Minimum: -10 Maximum: +60
2311	0x0906	Error output level (mA)	Float	Min. 0.5 mA Max. 24 mA
2313	0x0908	Low clipping limit	Float	0–2.5 %
2315	0x090A	Low error limit	Float	0–1025 %
2317	0x090C	High clipping limit	Float	0–12.5 %
2319	0x090E	High error limit	Float	0–1025 %
Analog input 1				
2562	0x0A01	Analog input 1 compensation parameter. Read-only: controlled by the pressure and temperature compensation mode registers.	Reg	0x0204 (pressure) 0x0206 (temperature)

Analog input 1				
2563	0x0A02	Scale low end for analog input 1 compensation parameter. Minimum and maximum values vary for different parameters.	Float	0x0204 (pressure) Minimum: 0 Maximum: 20 000
				0x0206 (temperature) Minimum: -200 Maximum: +400
2565	0x0A04	Scale high end for analog input 1 compensation parameter. Minimum and maximum values vary for different parameters.	Float	0x0204 (pressure) Minimum: 0 Maximum: 20 000
				0x0206 (temperature) Minimum: -200 Maximum: +400
2567	0x0A06	Input value (read-only)	Float	

A.4.3 Status registers

Table 18 Modbus status data registers (read-only)

Register number (decimal)	Address (hexadecimal)	Register description	Data format	Bitmask
513	0x0200	Device status code low	32-bit signed integer	See Table 19 (page 72).
515	0x0202	Device status code high	32-bit signed integer	See Table 20 (page 73).
517	0x0204	Pressure compensation values in use	Float	
519	0x0206	Temperature compensation values in use	Float	

Register number (decimal)	Address (hexadecimal)	Register description	Data format	Bitmask
523	0x020A	CO_2 measurement status	16-bit signed integer	**0x0000**: Status OK **0x0001**: Unsupported **0x0002**: Reading is not reliable **0x0004**: Under range **0x0008**: Over range **0x0010**: Noisy **0x0020**: Value locked **0x0040**: Calibration expired **0x0080**: Sensor failure **0x0100**: Measurement not ready
524	0x020B	CO_2 measurement status (dry basis)	16-bit signed integer	
525	0x020C	H_2O measurement status	16-bit signed integer	
526	0x020D	T_{df} measurement status	16-bit signed integer	
527	0x020E	T_s measurement status	16-bit signed integer	
528	0x020F	Device status	16-bit signed integer	**0x0000**: Status OK **0x0001**: Critical failure **0x0002**: Error **0x0004**: Warning **0x0008**: Notification
529	0x0210	Clear error log: the error log is cleared if 1 is written, other values are ignored. Register always reads as 0.	Function	
530	0x0211	Analog input level	Float	
532	0x0213	Analog input value	Float	

Table 19 Error codes in register 0x0200 (status code low)

Bitmask	Error message	Severity
0x00000001	Firmware checksum mismatch.	Critical
0x00000002	Device settings corrupted.	Critical
0x00000200	Infrared source temperature too high.	Error
0x00000400	Infrared source failure.	Error
0x00000800	Infrared source failure.	Error
0x00001000	Supply voltage out of range.	Error
0x00002000	Internal voltage out of range.	Error

Bitmask	Error message	Severity
0x00004000	Sensor signal low.	Error
0x00008000	Sensor signal low.	Error
0x00010000	Internal voltage out of range.	Error
0x00020000	Sensor signal distorted.	Error
0x00040000	Sensor signal distorted.	Error
0x00100000	CO_2 measurement out of range.	Error
0x00200000	H_2O measurement out of range.	Error
0x00400000	T_d measurement out of range.	Error
0x00800000	Sensor heater failure.	Error
0x01000000	Infrared source temperature too high.	Error
0x02000000	Internal temperature too high.	Error
0x04000000	Temperature measurement error.	Error
0x08000000	Supply power insufficient for analog input.	Error
0x10000000	Analog input out of range.	Error
0x40000000	Internal temperature error.	Error
0x80000000	Supply power insufficient for operation.	Error

Table 20 Error codes in register 0x0202 (status code high)

Bitmask	Error message	Severity
0x00000001	Sensor 1 signal low.	Warning
0x00000002	Sensor 2 signal low.	Warning
0x00000004	Internal temperature high.	Warning
0x00000008	Sensor signal distorted.	Warning
0x00000010	Sensor signal distorted.	Warning
0x00000020	Sensor signal distorted.	Warning
0x00000040	Unexpected device restart.	Warning
0x00000080	Calibration has expired.	Warning
0x00000400	Infrared source 1 temperature out of range.	Warning
0x00000800	Supply power insufficient for analog input.	Warning
0x00001000	Infrared source 2 temperature out of range.	Warning

Bitmask	Error message	Severity
0x00010000	Heater off.	Info
0x00020000	Calibration is about to expire.	Info

A.4.4 Test value registers

Read the known test values from the test registers to verify the functionality of your Modbus implementation.

Modbus test value registers listed in Table 21 (page 74) are available starting from MGP241 firmware version 1.3.3.

Table 21 Modbus test registers (read-only)

Register number	Address	Description	Data format	Test value
4097	0x1000	Signed integer	16-bit integer	−12345
4098	0x1001	Floating point	Float	−123.45
4100	0x1003	Text string	8-character ASCII string	Text string "−123.45"

A.4.5 Device identification objects

Table 22 Device identification objects

Object ID (decimal)	Object ID (hexadecimal)	Object name	Example contents
0	0x00	VendorName	"Vaisala"
1	0x01	ProductCode	"MGP241 "
2	0x02	MajorMinorVersion	Software version (for example "1.2.3")
3	0x03	VendorUrl	"http://www.vaisala.com/"
4	0x04	ProductName	"Vaisala Multigas Probe MGP241"
128	0x80	SerialNumber [1)]	Probe serial number (for example, "R0710040")
129	0x81	Calibration date [1)]	Date of the factory calibration

Object ID (decimal)	Object ID (hexadecimal)	Object name	Example contents
130	0x82	Calibration text [1)]	Information text of the factory calibration

1) Vaisala-specific device information object.

Index

A
analog input....17, 47
analog output....17, 47
analog outputs.... 40
configuration....41
default parameter configuration....40

C
cable connectors....14
calibration....49, 50
calibrating temperature measurement....52
carbon dioxide measurement calibration.... 51
zero point adjustment.... 51
compensation
pressure....43
temperature.... 43
compensation mode during calibration.... 49
configuring
analog input....46
compensation....44
external pressure sensor.... 46
external temperature sensor....46

D
dimensions....22
dry basis measurement....13

E
environmental compensation....43

F
features....12

G
grounding....32

I
Indigo300....37
Indigo520.... 37
Insight software
calibration....50
main view....36
Modbus communication settings....53
user modes....34
installation....20, 21, 23
ball valve....27
finalizing installation....32
flow-through adapter....28
gas safety....23
installation position....22
threaded port....26

M
measurement parameters.... 13
measurement principle.... 15
Modbus.... 53, 61
configuration registers....62
device identification objects....74
measurement data.... 61
status registers.... 71
test value registers.... 74

N
NPT 1.5 in thread test plug.... 20

P
parts.... 14
pressure compensation input options....23
product overview....12

R
recycling.... 59
regulatory statements....18

S
safety....18
service centers....

specifications..... 55

T

trademarks.....11

W

wet basis measurement..... 13
wiring.....28
wiring examples..... 31

Service centers

Vaisala offers comprehensive customer care throughout the life cycle of our products. Our service centers offer maintenance, calibration, upgrade, and repair services. All the services are provided worldwide with fast deliveries. For more information, go to vaisala.com/services.
The services are available from:

- Vaisala Online Store, store.vaisala.com
- Vaisala Services, helpdesk@vaisala.com

The provided services vary product by product.

Technical support

You can contact Vaisala technical support at vaisala.my.site.com/myvaisala or helpdesk@vaisala.com. You can find all our support channels at vaisala.com/support.
When contacting technical support, provide the following as applicable:

- Product name, model, and serial number
- Software/Firmware version
- Name and location of the installation site
- Name and contact information of a technical person who can provide further information
- Diagnostics package for the application

If applicable, also provide the following details:

- What failed (what worked / did not work)?
- Where did it fail (location and environment)?
- When did it fail (date, immediately / after a while / periodically / randomly)?
- How many failed (only one defect / other same or similar defects / several failures in one unit)?
- What was done when the failure was noticed?
- What was connected to the product and to which connectors?
- What is the input power source type, voltage, and what else (such as lighting, heaters, and motors) was connected to the same power output?
- Are all parts connected and grounded properly? Take a photo to help the troubleshooting.

Warranty

For warranty terms and conditions and the warranty claim process, see vaisala.com/warranty. Note that warranty coverage may not apply if the product is damaged due to normal wear and tear, exceptional operating conditions, negligent handling or installation, or unauthorized modifications. See the applicable supply contract or Conditions of Sale for details of the warranty for each product.

VAISALA

vaisala.com

AKRIBIS · www.akribis.info · contacto@akribis.info