USER GUIDE

MA 50.R.WH

Radwag

Distributed by AKRIBIS

User manual

IMMU-14-17-05-25-EN

MA.R
Moisture Analyzer

radwag.com

Scan the QR code to view additional scientific material that may be of interest to you.
There you will find more useful information in an accessible format!

AKRIBIS www.akribis.info contacto@akribis.info

Headquarters:

RADWAG Wagi Elektroniczne

Toruńska 5, 26-600 Radom
Phone: +48 (48) 386 60 00,
Service: +48 (48) 386 64 16,
Fax: +48 (48) 385 00 10
radom@radwag.pl
radwag.com

If you are reading this, it means that you are bound to achieve success. You have purchased a device that was designed and manufactured to give you years of service.
Congratulations and thank you for selecting RADWAG product.

MAY 2025

TABLE OF CONTENTS

1. GENERAL INFORMATION 6
2. TECHNICAL SPECYFICATION 7
3. GENERAL SAFETY PRECAUTIONS 7
3.1. Warning symbols and signals 7
3.1.1. Warning Descriptions 8
3.1.2. Warning Symbols 8
3.2. Precautions 8
3.3. Intended use 9
3.4. Warranty conditions 10
3.5. Safety precautions 10
3.6. Warranty 10
3.7. Metrological parameters monitoring 11
3.8. Manual-provided information 11
3.9. Staff competence 11
3.9.1. Protective clothing 11
4. TRANSPORT AND STORAGE 11
4.1. Delivery checklist 11
4.2. Package 12
5. UNPACKING AND INSTALLATION 12
5.1. The moisture analyser workplace 12
5.2. Unpacking 12
5.3. Balance level setting 13
5.4. Standard components list 13
5.5. Maintenance activities 13
5.6. Powering the device 16
5.7. Connecting additional hardware 16
6. KEYBOARD – BUTTONS FUNCTIONS 16
7. START-UP 17
7.1. Temperature stabilization period 17
7.2. User menu 17
7.3. Logging 19
8. MISCELLANEOUS PARAMETERS 19
9. ADJUSTMENT 21
9.1. Extrenal adjustemnt 22
9.2. User adjustment 22
9.3. Adjustment report printout 22
9.4. Temperature adjustment 23
9.5. Drying process test 25
10. DETERMINING PRINTOUT CONTENT 26
10.1. Adjustment report 26
10.2. Header, footer, GLP printouts 27
10.3. Drying process report printout 29
10.4. Non-standard printouts 30
10.4.1. Inserting Text 30
10.5. Variables 32

11. DATABASES 32
11.1. Users 33
11.2. Products 34
11.3. Drying programs 34
11.4. Tares 34
11.5. Weighings 35
11.6. Reports on drying pprocess 36
12. EXPORT AND IMPORT OF DATABASES 38
12.1. Database esport 39
12.2. Database import 39
12.3. Measurement data printout 40
13. PREPARING SAMPLES FOR DRYING 40
13.1. Rules for measurement of moisture analyser humidity content 41
13.2. Sampling and preparation 41
14. SELECTION OF DRYING PARAMETERS 43
14.1. Selecting Optimum Mass for a Sample 43
14.2. Influence of Sample Weight on Measurement Result Repeatability 44
14.3. Drying Temperature 44
14.4. Selecting Drying Mode 44
14.5. Drying Time 45
14.6. Drying Mode Analysis 46
15. FUNCTIONS 46
16. WEIGHING 47
16.1. Good Weighing Practice 47
16.2. Balance Zeroing 48
16.3. Balance Taring 49
16.3.1. Weighing Profiles 50
16.4. WEIGHING Mode Settings 51
16.4.1. Autotare 53
16.4.2. Print Mode 53
16.4.3. Information 54
16.4.4. Non-standard Information 55
16.4.5. F Shortcut Keys 56
17. DRYING PROCESS PERFORMED BY MEANS OF QUICK MENU 57
17.1.1. Additional Settings for Drying Mode 57
17.1. Drying Process Mode and Drying Parameters 58
17.2. Automatic Finish Mode 60
17.3. Unit of Displayed and Printed Measurement 60
17.4. Measurement Printout Interval 61
18. DRYING PROCESS PERFORMED WITH USE OF DRYING PROGRAM LIBRARY 61
19. DRYING PROCESS 62
20. COMMUNICATION 64
20.1. RS 232 Ports Settings (COM) 65
20.2. WIFI Port Settings 65
20.3. USB Port 66
21. PERIPHERAL DEVICES 69
21.1. Computer 69

21.1.1. Computer Connection Port 69
21.1.2. Continuous Transmission 70
21.1.3. Printouts Interval for Continuous Transmission 70
21.2. Printer 71
21.3. Barcode Reader 73
22. COOPERATION WITH PERIPHERALS 73
22.1.1. Response Format 74
23. COMMUNICATION PROTOCOL 75
23.1. List of Commands 75
23.2. Response Format 76
23.3. Manual Printout / Automatic Printout 89
24. ERROR MESSAGES 90
25. USING MOISTURE ANALYSER 90
26. MAINTENANCE ACTIVITIES 90
26.1. Cleaning moisture analyser components 91
26.2. Troubleshooting 92
27. ADDITIONAL EQUIPMENT 92
28. INFORMATION ON THE MOISTURE ANALYSER 92

1. GENERAL INFORMATION

Dimensions

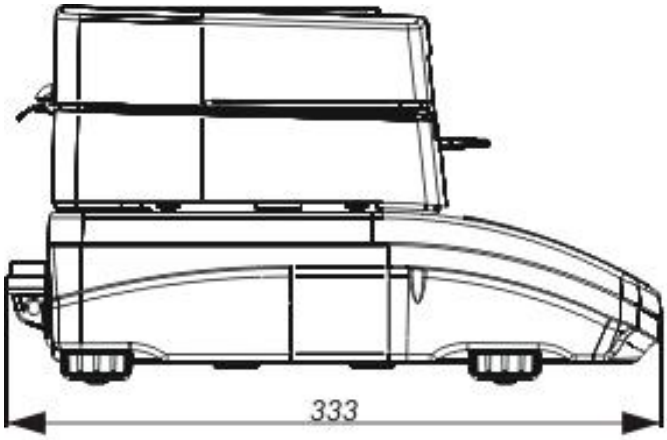

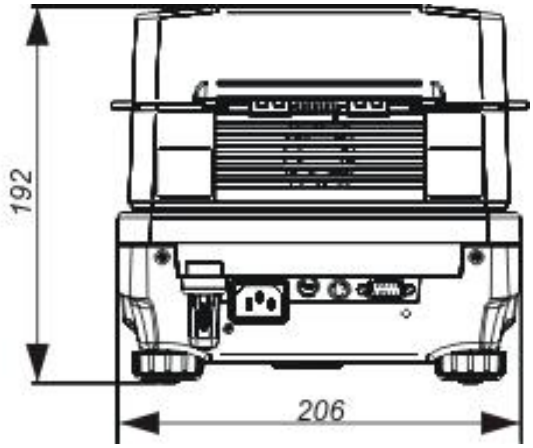

Connectors

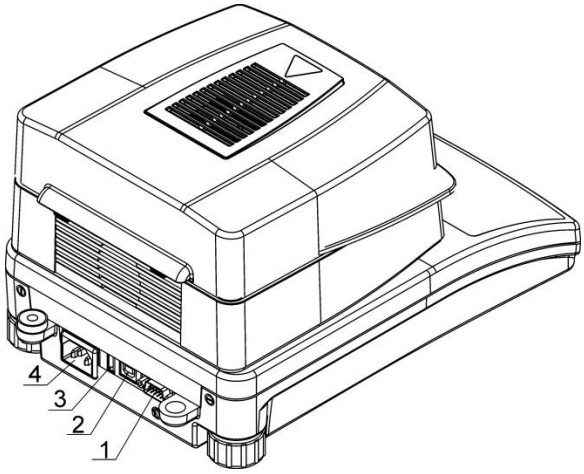

1.COM connector
2.USB 2 type B connector
3.USB 1 type A connector
4.Power supplier connector

Diagrams of connection cables

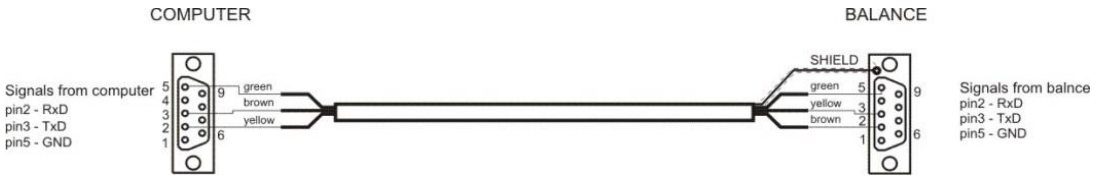

Balance - computer cable (RS232)

2. TECHNICAL SPECYFICATION

Moisture analyzer type	MA 50/1.R	MA 50.R	MA 110.R	MA 210.R
Max capacity	50 g	50 g	110 g	210 g
Reading unit	0.1 mg	1 mg	1 mg	1 mg
Tare range	- 50 g	- 50 g	- 110 g	- 210 g
Maximum sample weight	50 g	50 g	110 g	210 g
Moisture content readability	0.0001%	0.001 %		
Moisture content repeatability	+/- 0.05% (sample ~2g), +/- 0.01% (sample ~10g)			
Drying temperature range	Max. 160 °C Max. 250 °C (WH)			
Heating module	IR emitter (NP) halogen lamp (NH or WH) metal heater (NS)			
Drying method	4 drying profiles: standard, fast, step, mild			
Finish mode	3 modes: automatic, time-defined, manual			
Operating temperature	+10 °C - +40 °C			
Power supply	230V 50Hz AC			
Display	LCD			
Weighing pan dimensions	ø 90 mm, h = 8 mm			
Drying chamber dimensions	120 x 120 x 20 mm			
Net/gross weight	~4.8 / 6 kg			
Packaging dimensions	476×381×346 mm			
Power consumption	4W during weighing max 450W during drying			
Ingress protection	IP 43			
Overvoltage catergory	II			
Polution category	2			

3. GENERAL SAFETY PRECAUTIONS

3.1. Warning symbols and signals

Safety precautions are marked with special descriptions and warning symbols. They inform on potential risk and danger. Neglecting the safety precautions may lead to injuries, moisture analyser damage or faulty operation and measurement errors.

3.1.1. Warning Descriptions

WARNING	Medium risk danger that can lead to a serious injury or death.
CAUTION	Low risk danger that can lead to moisture analyser damage or dysfunction, loss of data or minor or moderate injury.
NOTE	Critical information on the moisture analyser.

3.1.2. Warning Symbols

Electric shock

Acid / Corrosion

Potential danger

Flammable or explosive substances

Toxic substances

Hot surface

Mind your hands, crush injury risk

3.2. Precautions

WARNING!
Adherence to safety information and user manual guidelines is required in order to prevent risk of health damage and even death.

WARNING:
Nominal voltage for a moisture analyser is 230 VAC. It means that safety usage precautions for low voltage devices must be abided by while operating the device. The moisture analyser is equipped with a three-core power supply cable with grounding pin. If necessary, an extension cord can be used provided that it meets the applicable standards and has a protective ground conductor. Intended disconnection of the grounding cable is forbidden.

CAUTION:
Drying chamber cannot be opened during operation (drying process). It is due to the fact that a halogen lamp and its glass shield may reach the temperature of up to 400 C. When setting up the moisture analyser leave enough space to prevent heat from building up and to keep your analyser from overheating. Leave about 20 cm around the instrument and about 1 m above. Air vents that are located in the housing cannot be covered, sealed or blocked in any other way. Do not put any flammable substances on, under or near the moisture analyser. Be particularly careful when removing the sample from the drying chamber: the sample itself, the drying chamber, shields and the pan can still be extremely hot.

In case of any maintenance work (cleaning the inside of the drying chamber), the moisture analyser must be switched off. Wait until all the components have cooled down. Do not perform any modification to the heating module.

Same types of samples require taking particular safety precautions.
They can pose a danger for people and objects. It is always the user who is liable for possible damages caused by the use of an inappropriate sample.

CAUTION:
Corrosion: substances that release aggressive vapours (e.g. acids) during the heating process. While drying such substances it is recommended to work with small samples. Otherwise, vapours can condense on cold housing parts and cause corrosion.

WARNING:
Fire or explosion: flammable or explosive substances, substances containing solvents or releasing flammable or explosive gases or vapours. When in doubt as for the sample's characteristics perform risk analysis before carrying out the procedure. For the said type of samples, apply as low drying temperatures as possible, thus preventing flames or explosion. During the analysis it is necessary to wear protective glasses and gloves. The samples should be relatively small. **Under no circumstances can the instrument be left unsupervised!**

WARNING:
Substances containing toxic and caustic or corrosive components: substances that release toxic gases or vapours can cause irritations (eyes, skin or respiratory system), illnesses or even death. Dry such substances only in fume cupboards.

WARNING:
Moisture analyzers are equipped with a mechanism for drying chamber lid closing and opening. Be extremely careful while operating the device so as to prevent potential crush injury during lid closing/opening.

Under no circumstances should the instrument be used within an explosion endangered area. The moisture analyser is designed to be operated outside hazardous areas exclusively.

3.3. Intended use

Moisture analyser is designed to verify relative moisture content in small samples of various substances, dry mass content in small samples and mass of weighed objects. The device ensures fast and precise process of determination of water content in a tested sample whereas application of touch screen display considerably simplifies operation and improves functionality of the moisture analyser. The device can be used to determine humidity content of different materials.
At the initial stage of the measurement, the moisture analyser precisely determines mass of an object placed on a weighing pan. As the mass reading is stabilized, the sample is quickly heated by a halogen lamp, an IR emitter or a metal heater causing humidity evaporation from the tested sample. While sampling, the moisture analyser is continuously checking loss of mass, and on calculation, it displays current moisture content of a tested sample. Compared to conventional methods of humidity content determination of various substances, application of moisture analyser considerably shortens measurement time and simplifies testing procedure. Moisture analyser facilitates setting multiple parameters which influence the procedure of moisture content determination in a sample (temperature, time, drying modes, etc.).

3.4. Warranty conditions

CAUTION!
Do not open the drying chamber during the drying process. The moisture analyser features a halogen lamp which is a very powerful heat source. Pay special attention not to touch those elements of a moisture analyser that get hot while the drying procedure (i.e.: disposable pan, pan handle, and inner shields of the drying chamber).
Remember that some tested samples may become dangerous when heated (emission of poisoning vapours, danger of ignition or explosion).
The moisture analyser is not intended for dynamic weighing. Even if small amounts of a sample are added to or taken off the weighing pan, the mass readout should be taken only on stabilization of the measurement result (appearance of stability pictogram ◣◢ on the display).
Do not place any magnetic materials on the weighing pan, as this can cause damage of the measuring system of the instrument.
Be sure to avoid impact shock and overloading of the moisture analyser in excess of the prescribed maximum measuring range (max capacity), minus any possible tare weight that has been applied).
Never use the moisture analyser in an environment endangered by an explosion!
This moisture analyser is not adjusted for operation in explosive areas. Remember that it is forbidden to make any modification to the moisture analyser.

3.5. Safety precautions

RADWAG moisture analyser adheres to all binding safety regulations. Nevertheless there are exceptional circumstances that may cause danger.
Do not open the instrument's housing. Inside there are no parts that would require maintenance, repair or replacement carried out by a user. In case of any problems, contact RADWAG service or a distributor.
Remember to use the device in accordance with this user manual, especially to follow instructions on installation and configuration of a new device.
Since use of the moisture analyser conversely to safety precautions and user manual guidelines may be hazardous to operator's health and life, it is obligatory to read them carefully:

- use the moisture analyser to determine humidity content in samples and to determine mass of a tested sample; any other use of the moisture analyser may be dangerous both to the device and the user,
- before commissioning the moisture analyser, make sure that the nominal power of the device specified on its data plate is compatible with the supply in the mains to which the moisture analyser is to be plugged in,
- **halogen lamps can only be changed by an authorized service employee**,
- protect moisture analyser against contacts with liquids, it might lead to electrocution, fire, emission of substances containing toxic or caustic vapour, emission of explosive substances.

3.6. Warranty

Warranty does not cover the following cases:

- not observing the user manual regulations,
- using the moisture analyser conversely to its intended use,

- any modifications of a moisture analyser or cases when its housing has been opened (damaged protective stickers),
- mechanical defects and defects caused by media, liquids, water and natural wearing off,
- inappropriate working environment or electrical installations defects,
- overloading of measuring mechanism.

3.7. Metrological parameters monitoring

Moisture analyser metrological parameters shall be monitored in specified time intervals. Checks frequency is determined by ambient conditions, performed weighing processes and adopted system for quality monitoring.

3.8. Manual-provided information

Read the user manual carefully before plugging your instrument to the mains and prior the start-up. Familiarizing the manual is necessary even for users experienced with this type of moisture analysers.

3.9. Staff competence

The moisture analyser should only be operated and maintained by personnel who is trained and experienced in using this type of instruments.
In order to use the moisture analyser, first read the user manual. Keep these instructions for the future reference.

Do not make any design modifications. Additional equipment compatible with the moisture analyser and spare parts should be supplied by RADWAG or an authorized distributor.

3.9.1. Protective clothing

While working with the instrument use protective clothing, this is to take safety precautions against potential hazards source of which might be tested samples and ingredients.

Use the following while carrying out tests:
- protective apron,
- protective glasses,
- protective gloves (while working with hazardous chemical substances).

Before the use of the above-mentioned protective clothing, make sure that it has been designed to be used with specific samples and that it is not damaged.

4. TRANSPORT AND STORAGE

4.1. Delivery checklist

Upon delivery it is necessary to check the package, make sure that your package bears no signs of damage.

4.2. Package

Keep all package elements should your device be transported in a future. Remember that only original packaging can be used for shipping purposes. Prior packing uncouple any cables, remove any separable components (weighing pan, shields, inserts). The device components shall be packed into an original packaging, thus being protected against potential damage during transportation.

5. UNPACKING AND INSTALLATION

5.1. The moisture analyser workplace

- Store and use your moisture analyser in locations free of vibrations and shakes, and free of air movement and dust, make sure that it is located at the max altitude of 2000 above sea level.
- Make sure that the moisture analyser’s workplace ensures good air circulation around the instrument (approximately 20 cm free space around the moisture analyser and 1 m free space over it).
- Pay attention to the ambient air temperature in the weighing room, it should not be out of the specified range, i.e. +10 °C - +40 °C.
- Pay attention to the ambient relative humidity, for temperature ranging up to 31°C it should be 80% maximum, and it should decrease linearly to 50 % for temperature of 40°C.
- Make sure that the moisture analyser is placed away from heat sources on a stable wall console desk or on a stable table which is not affected by vibrations.
- Make sure that the moisture analyzer's power supply plug is easily accessed and can be quickly disconnected from the mains if necessary.
- Since part of the balance is a strong magnet take special safety measures when weighing magnetic objects.

5.2. Unpacking

Carefully take the device out of the packaging, remove the transport lock and gently place the moisture analyser at its workplace. Install the weighing pan and accessories following the diagram below:

Accessories installation:

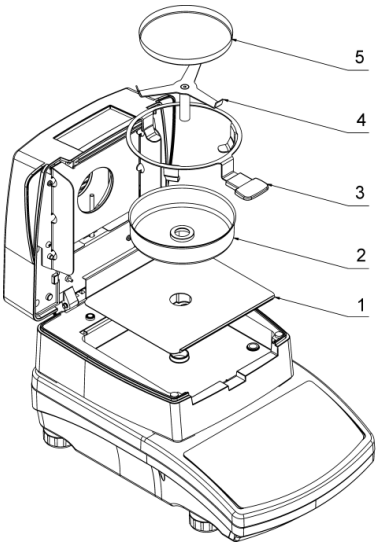

Install:

- drying chamber base insert (1),
- drying pan shield (2),
- drying pan handle (3),
- cross-shaped holder (4),
- disposable pan (5).

Positioning the bracket.

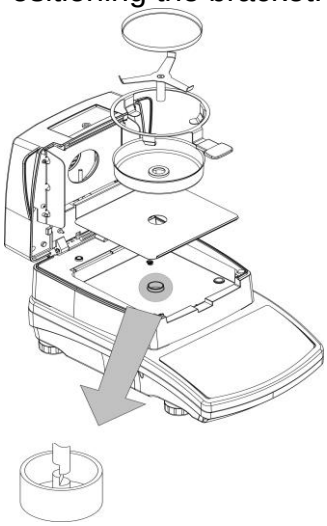

When installing the cross-shaped holder (pan supported) pay special attention to the correct positioning of its mandrel. The mandrel features a cut providing unique positioning of the holder against the pan handle, thus preventing their contact and friction.

Setting the cross-shaped holder:

- assemble the holder onto the mandrel and turn it slightly so that the mandrel cuts are located in their unique and correct position,
  CAUTION: turn the mandrel gently so as not to damage moisture analyser's measuring system.

5.3. Balance level setting

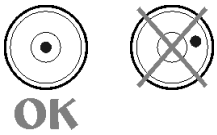

It is necessary to level the balance prior connecting it to the mains. To level the balance turn its feet until an air bubble takes central position.

5.4. Standard components list

- Moisture analyser,
- Drying chamber base insert,
- Drying pan shield,
- Drying pan handle,
- Cross-shaped holder,
- Disposable pan,
- Power cord,

5.5. Maintenance activities

Maintenance activities:

1. Disassemble the weighing pan and other detachable components (the components differ depending on the weighing instrument model, read section: *UNPACKING AND INSTALLATION)*. Be careful while installing the components so as not to cause any damage to the moisture analyzer mechanism.
2. In order to ease cleaning of glass anti-draft chamber panes, it is permissible to remove them following the below instruction.

Caution:
In case of heavy dust occurring at the place of moisture analyzer operation, it is recommended to commission an inspection of the device to be carried out by RADWAG service every 6 months.
Cleaning the weighing pan while still installed may cause damage of the measuring system.

Cleaning ABS components:

To clean dry surfaces and avoid smudging, use clean non-colouring cloths made of cellulose or cotton. You can use a solution of water and detergent (soap, dishwashing detergent, glass cleaner). Gently rub the cleaned surface and let it dry. Repeat cleaning process if needed.

In the case of hard to remove contamination, e.g. residues of adhesive, rubber, resin, polyurethane foam etc., you can use a special cleaning agents based on a mixture of aliphatic hydrocarbons that do not dissolve plastics. Before using the cleanser for all surfaces we recommend carrying out tests. Do not use cleansers containing abrasive substances.

Cleaning anti-draft chamber panes:

Select dissolvent depending on a dirt. Never soak the glass panes in alkaline solutions since they interact with glass and may cause damage. Do not use cleansers containing abrasive substances.

For organic dirt use acetone first, next use water or detergent. For other than organic dirt use diluted acid solutions (soluble salts of hydrochloric or nitric acid) or base solutions (ammonium or sodium base).

To remove ACIDS use protophilic solvent (sodium carbonate), to remove BASE use protogenic solvent (mineral acid of various concentration).

In case of heavy contamination use brush and detergent, nevertheless avoid detergents containing large and hard molecules which could potentially scratch glass panes.

At the end of the cleaning process rinse the pane using distilled water.

Use soft brush with wooden or plastic handle exclusively in order to avoid risk of scratches. Do not use wire brush.

Rinsing is a necessary cleaning process stage allowing to remove remaining soap, detergents and other cleansers from the panes prior their reinstallation.

After preliminary cleaning process stage, rinse the pane using running water first, distilled next.

Avoid drying the panes either using paper towel or forced air circulation since some fibres, grains or contamination of other type could permeate into the panes thus causing weighing errors.

We do not recommend using driers when drying measuring glass tools.

It is a frequent treatment to leave glass components on a rack to dry.

Cleaning stainless steel components

When cleaning stainless steel components, the following table should be followed, which lists the types of contamination and ways of removing it.

Fingerprints	*Clean with alcohol or dilutant.* *Rinse with clean water and wipe dry.*
Oils, fats, greases	*Wash with organic solvents and then clean with warm water with soap or mild detergent.* *Rinse with clean water and wipe dry.*
Temperature stains and discolorations	*Wash with a gentle abrasive cleaner, clean lightly according to the direction of the surface structure.* *Rinse with clean water and wipe dry.*
Strong discoloration	*Clean lightly according to the direction of the surface structure.* *Rinse with clean water and wipe dry.*
Traces of rust	*Moisten with oxalic acid solution and leave for about 15-20 minutes, then wash with warm water with soap or mild detergent. Rinse with clean water and wipe dry.*
Paints	*Wash with paint solvent and then rinse with warm water with soap or mild detergent.* *Rinse with clean water and wipe dry.*
Scratches on the surface	*Gently polish the surface with a non-woven fabric (iron-free) according to the direction of the surface structure. Wash with a gentle abrasive cleaner. Rinse with clean water and wipe dry.*

Cleaning powder-coated components:

For preliminary cleaning process stage you need running water or wet sponge featuring large holes, this will help you to remove loose, heavy dirt.

Do not use cleansers containing abrasive substances.

Next, using cloth and cleanser-water solution (soap, dishwashing liquid) gently rub the cleaned surface.

Avoid using cleanser without water since it may result with damage of the cleaned surface, please mind that large amount of water mixed with cleanser is a must.

Cleaning Aluminium Components

While cleaning aluminium components use products acid by nature, e.g. spirit vinegar, lemon. Do not use cleansers containing abrasive substances. Avoid using hard brush, this may cause scratches. It is recommended to use microfibre cloth.

While polishing the surface use circular movements. Use clean, dry cloth to make the surface shine.

5.6. Powering the device

A moisture analyser can be plugged to the mains only by means of an original power cord, which comes standard with the moisture analyser. Rated voltage (specified on the device's data plate) must be compatible with the mains rated voltage.
Make sure that the moisture analyzer's power supply plug is easily accessed and can be quickly disconnected from the mains if necessary.
The power cord can be connected only to a socket with a ground contact. Plug the power cord to the moisture analyser. The moisture analyser's power plug is located at the back of its housing.
Moisture analyser display shows name and program number first, next an indication 0.000 g (balances with readability of 1 mg) or 0.0000 g (balances with readability of 0,1 mg). If the indication does not equal zero, press [→0← Delete] button.

5.7. Connecting additional hardware

CAUTION:
It is possible to connect only SELV (Safety Extra-Low Voltage) and limited energy devices to the moisture analyzer interfaces.

Use only accessories and peripheral equipment recommended by the manufacturer. The balance must be disconnected from the mains before connecting or disconnecting any peripherals (printer, PC computer, computer keyboard). On connecting the peripherals, plug the balance to the mains.

6. KEYBOARD – BUTTONS FUNCTIONS

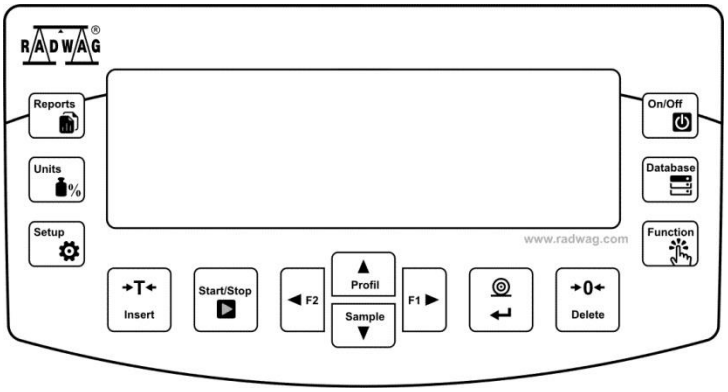

Button	Overview
On/Off	Press to switch the balance display ON/OFF With switched off display other components remain powered, the balance is in a stand-by mode ***F9*** *button of the computer keyboard*
Database	Press to access data stored in databases: user, product, tare, drying mode. ***F10*** *button of the computer keyboard*
Function	Function key, press to access current working mode functions. ***F11*** *button of the computer keyboard*

AKRIBIS · www.akribis.info · contacto@akribis.info

Press to access drying process reports database
***F5** button of the computer keyboard*

Press to change measuring units in the course of the drying process: %M, %D, %R, g

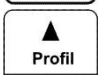

Press to access drying parameters settings directly (button active only for moisture analyser mode)

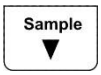

Press to access sample database directly

Press to send current display status to a peripheral device (PRINT) or to accept selected value of a parameter or function (ENTER).

Press to zero balance indication

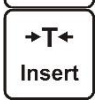

Press to tare balance indication

Press to launch/abort drying process
***F6** button of the computer keyboard*

Press to enter the main menu
***F7** button of the computer keyboard*

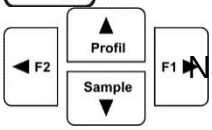

Navigating arrows for operating balance menu or changing parameter value.

7. START-UP

When plugged to the mains, the balance displays program name and number, next it proceeds to the weighing mode.

7.1. Temperature stabilization period

It is necessary to wait until the balance reaches thermal stabilization before the measuring processes starts.
The thermal stabilization period shall take at least 4 hours for balances that before being plugged to the mains were stored in much lower temperatures (e.g. during winter period). During the thermal stabilization, the indications on the display panel can change.
It is recommended that ambient temperature changes at place of use were insignificant (slow to change).

7.2. User menu

User menu is divided into 7 basic function groups. Each group has its symbol starting with capital letter **P**.

P1 CALIBRATION

P1.1	EXT. CALIB.	[external adjustment]
P1.2	USER CALIBRATION	[user adjustment]

P1.3	THERM.CAL	[adjustment of control thermometer]
P1.4	TEMPERATURE TEST	[test of control thermometer]

P2 WORKING MODES

P2.1	WEIGHING	[settings for the weighing function]
P2.2	MOISTURE ANALYSER	[setting for the drying function]

P3 COMMUNICATION

P3.1	COM1	[transmission parameters port COM 1]
P3.2	WIFI	[transmission parameters port WIFI]

P4 DEVICES

P4.1	COMPUTER	[PC connection port]
P4.2	PRINTER	[printer connection port]
P4.3	BARCODE READER	[barcode connection port]

P5 PRINTOUTS

P5.1	CAL. REPORT	[contents of the adjustment report]
P5.2	HEADER	[contents of the header printout]
P5.3	GLP PRNT.	[contents of the weighing result printout]
P5.4	FOOTER	[contents of the footer printout]
P5.5	DRYING PROCESS REPORT	HEADER, MEASUREMENT, FOOTER
P5.6	NSD.PRN.1	[project of non-standard printout 1]
P5.7	NSD.PRN.2	[project of non-standard printout 2]
P5.8	NSD.PRN.3	[project of non-standard printout 3]
P5.9	NSD.PRN.4	[project of non-standard printout 4]
P5.10	VARIABLE1	[project of variable 1]
P5.11	VARIABLE2	[project of variable 2]

P6 OTHER

P6.1	LANGUAGE	[menu language]
P6.2	ACCESS LEV.	[access levels for editing menu]
P6.3	KEY SOUND	[key sound]
P6.4	BACKLIGHT	[display backlight level]
P6.5	STAND-BY MODE	[backlight turn-off time interval]
P6.6	AUTO SWITCH-OFF	[display turn-off time interval]
P6.7	DATE	[date settings]
P6.8	TIME	[time settings]
P6.9	DATE FORM.	[date format]
P6.10	TIME FORM.	[time format]

P7 INFO

P7.1 BALANCE ID
P7.2 SCALE TYPE
P7.3 SOFT. VER.
P7.4 TEMP.
P7.5 CHAMB.TEMP.
P7.5 SETUP PRNT. [balance parameters printout]

CAUTION
Balance memory modifications are saved upon abandoning the menu (i.e. on return to weighing operation). Press ESC button several Times.

7.3. Logging

In order to have full access to user parameters and be enabled to edit databases, the balance operator should log in as **<ADMINISTRATOR>** each time running the balance. The software enables the entry of 100 users with various access rights.

First Log In operation - procedure:

- Run home screen and press Function button, next select <**LOG IN**> option, operators database window opens with list of available users, or press function button with <**LOG IN**> function assigned, or press Database button, enter users database and select <**ADMIN**> user.
- Press button for confirmation, wait to be asked for a password.
- Enter the password: „1111", next press for confirmation.
- Home screen of the software is displayed again automatically.
- When logged, add users and set the permissions levels (for the procedure of assigning permissions levels read section 10.1).

On future Logging In, select a user from the list and enter the password, the software initiates operation with permissions level set for the selected user.
If any user is logged in, a pictogram is displayed.

Log out operation – procedure:

- Select <**NONE**> position out of the list of available users
- Home screen of the software is displayed again, and the display shows no logged-in user. (no logged-in user, no pictogram on the display).

8. MISCELLANEOUS PARAMETERS

You can set up parameters which influence balance operation. These parameters are to be found in parameters group **P6 OTHER**.
Settings modification for particular parameters of this parameter group proceeds likewise as described in the previous section.

Menu language
Language parameter enables selecting the language of the balance menu descriptions.
Available languages: POLISH, ENGLISH, GERMAN, SPANISH, FRENCH, TURKISH, CZECH, ITALIAN, HUNGARIAN.

Permissions
Permissions parameter enables choosing access level for a particular user, one that is not logged in.
Available access levels: ADMIN. / USER. / ADV.
Balance parameters and settings can be entered and modified by any user, the scope of modification depends on the user's permissions level.

„Beep" sound – reaction to operation of pressing a key
Sound parameter enables switching on/off a 'beep' sound responsible for informing a user about pressing any key of balance overlay.

NO - 'beep' sound off
YES - 'beep' sound on.

Backlight, and display brightness adjustment
The parameter enables setting the brightness of the backlight or switching off the display brightness completely.
100 - maximum brightness of the backlight
10 - minimum brightness of the backlight
NONE - display brightness switched off

Backlight turn-off time
Parameter <P6.5 STAND-BY MODE> enables use of function responsible for activation of the display stand-by mode when weighing process is not being performed (stable indication is a necessary condition for activation of the stand-by mode).
NONE – backlit turn-off time not activated
0.5; 1; 2; 3; 5 – time given in minutes
If the software registers stable indication for a specified time interval, set in parameter <P6.5 STAND-BY MODE>, than the display goes out immediately.
The backlight activates upon change of indication (no stability pictogram on the display) or pressing any key on the balance keypad. Blanking works also when balance menu is entered.

Auto switch-off
Parameter <P6.6 AUTO OFF> enables use of function responsible for automatic display deactivation (functions as On/Off button). Upon display deactivation the other subassemblies are powered and the balance turns to stand-by mode.
NONE – auto switch-off not activated
0.5; 1; 2; 3; 5 – time given in minutes
If the software registers stable indication for a specified time interval, set in parameter <P6.6 AUTO OFF> settings, than the display is turned-off immediately (inactive backlight function, no indication on the display, clock displayed).
To start-up the balance it is necessary to press On/Off button located on the balance keypad. The balance will automatically return to weighing.
The balance cannot be turned off if any process is started or if balance menu is entered.

Date

Date parameter enables setting the current date.
Procedure:

Time

Date parameter enables setting the current time.
Procedure:

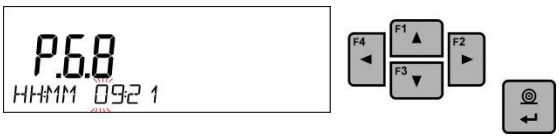

Date format

Date form. parameter enables altering the date format on the printout [YYYY.MM.DD / YYYY.DD.MM / DD.MM.YYYY / MM.DD.YYYY], where: YYYY – year; MM – month; DD – day.

Time format

Time form. parameter enables specifying time format for a printout [12h / 24h].
For [**12h**] option selected, <**A**> or <**P**> letter is displayed next to presented time value, where: **A** stands for hours before noon; **P** stands for hours after noon.

9. ADJUSTMENT

In order to ensure the highest weighing accuracy, it is recommended to periodically introduce a corrective factor of indications to balance memory, the said factor must be referred to a mass standard. In other words, balance adjustment shall be performed from time to time.

Adjustment should be carried out:

- Before the beginning of weighing procedure,
- If long breaks between following measuring series occur,

Types of adjustment:

- Adjustment performed by means of an external adjustment weight
  * of declared mass, which cannot be modified
  * of mass within balance range, freely chosen but not lower than 30% of Max range.

CAUTION!
In case of verified balances (with an internal automatic adjustment system) only automatic internal adjustment and manual internal adjustment are available. Remember to carry out the adjustment process when there is no load on the pan! When the weighing pan is loaded, command ***<RANGE EXCEEDED>*** *is displayed. In such a case remove the load and restart the the adjustment process. Adjustment process can be aborted if necessary by pressing* ***Esc*** *button at any time during the process.*

9.1. Extrenal adjustemnt

The external adjustment should be carried out with an external mass standard of class F_1.
Run an external adjustment process, the balance displays a command ordering to unload the weighing pan, **<REMOVE MASS>** (the weighing pan must be empty). When the weighing pan is unloaded, press button. The balance determines mass of an empty pan, message <**CALIBRATION**> is displayed in the bottom line. Next, message <**PLACE MASS**> and mass value to be placed on the weighing pan are displayed, **e.g. 200.000g** (depending on the type of the balance). Place an external adjustment weight of displayed mass value and press button**.** The balance determines the mass, message <**CALIBRATION**> is displayed in the bottom line. On completing adjustment process the balance returns to submenu **P1.2 EXT.CALIB.**

CAUTION:
Extrenal adjustment is disabled for verified balances.

9.2. User adjustment

The external adjustment should be carried out with an external mass standard of class F_1.
Run an external adjustment process, the first step of the process is to declare the mass of a weight that is to be used for adjustment. The mass must be ≥ 30% Max capacity.

Once the mass of the weight is entered and confirmed, the message prompting the user to remove the weight from the pan is displayed: **<REMOVE MASS>** (the weighing pan must be empty). Unload the pan and press button, the balance determines the weight of an unloaded pan, message <**CALIBRATION**> is shown in the bottom line. Next, message <**PLACE MASS**> and mass value to be placed on the weighing pan are displayed, **e.g. 200.000g** (depending on the type of balance). Place an external adjustment weight of displayed mass value and press button**.** The balance determines the mass, message <**CALIBRATION**> is displayed in the bottom line. On completing adjustment process the balance returns to submenu **P1.2 EXT.CALIB.**

9.3. Adjustment report printout

At the end of each adjustment process or adjustment test, an adjustment report is generated automatically and sent to a communication port COM 1. The content of the report is declared in menu P5.1 CAL REPORT.
The instruction on how to declare settings for this option is described in section about printouts.
The report can be printed out via a printer connected to the balance or it can be sent to the computer and saved as a file for archiving purposes.

9.4. Temperature adjustment

Temperature adjustment is carried out by means of a dedicated kit, that is an optional equipment of the moisture analyser.

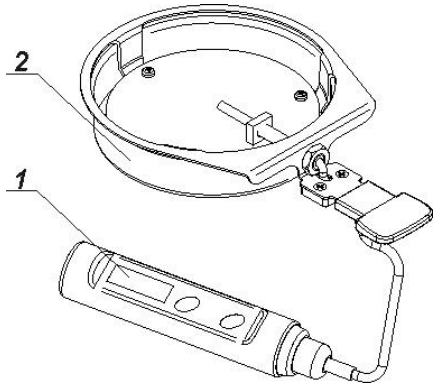

1. Thermometer
2. Thermometer holder and drying chamber shield

Adjustment of the drying chamber temperature is a process carried out for the purpose of adjusting the temperature sensor assembled inside the drying chamber of a moisture analyser. Before starting temperature adjustment process, place the temperature calibration kit inside the drying chamber, following below instructions.

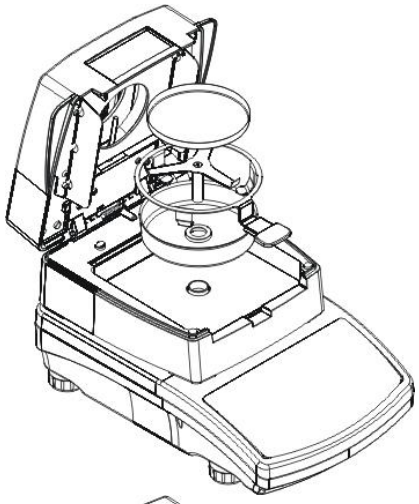

Step 1.

Remove:

- disposable pan,
- drying pan handle,
- cross-shaped holder,
- drying pan shield,

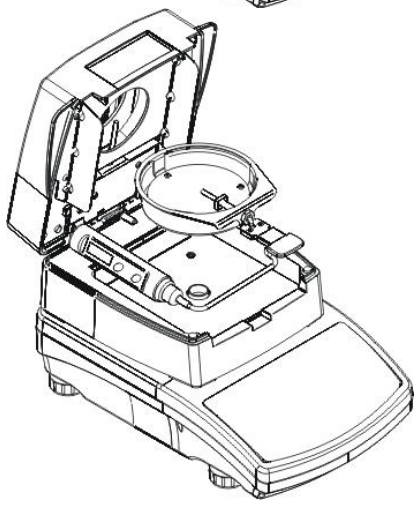

Step 2.

Install:

- drying chamber shield, and
- thermometer

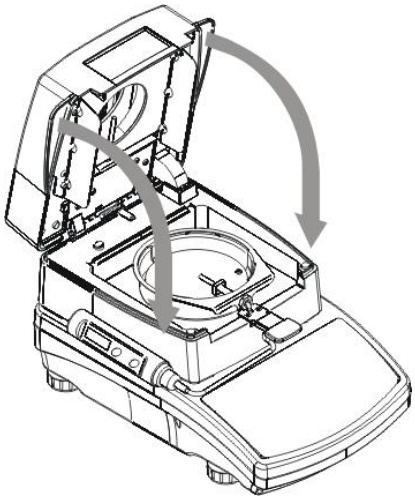

Step 3.

With the kit installed close the drying chamber and start the temperature adjustment process.

CAUTION
All the activities must be carried out with great caution so as not to damage the measuring mechanism of the moisture analyser.

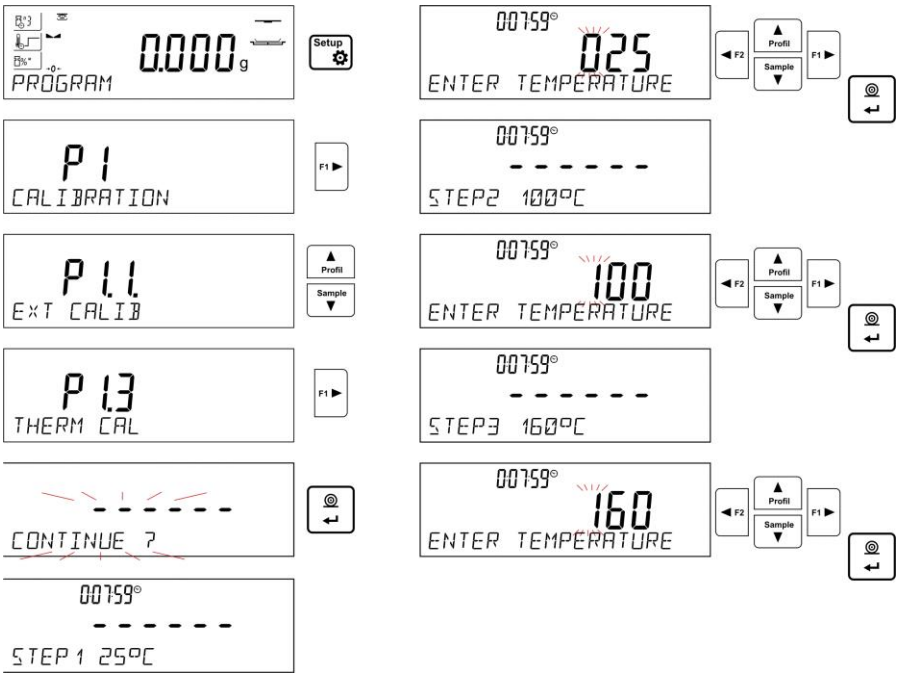

Go to menu <**P1.3 THERM CAL.>**, a message <**Continue?**> shall be displayed, confirm, upon confirmation temperature sensor adjustment starts.
After 8 minutes the display indicates a pulsating temperature value. Use navigating buttons (up and down arrow) of you moisture analyser's overlay and set the temperature value, make it equal to the current temperature displayed on the control thermometer. Use **Print/Enter** button to proceed to the second step of the temperature adjustment process. The moisture analyser halogen lamp starts to operate and the drying chamber is heated as long as necessary to provide specified temperature, which is next maintained for 8 minutes.
After 8 minutes the display indicates a new pulsating temperature value. Like before, use the moisture analyser navigating buttons to set the temperature value, make it equal to the current temperature displayed on the control thermometer. Upon entering the new temperature value accept it by pressing **Print/Enter** button, the last step of the temperature adjustment process starts.
The moisture analyser heats the drying chamber again, the new temperature is maintained for 8 minutes again. After 8 minutes the display indicates a new pulsating temperature value,

which should be changed to be equal to the one indicated on the control thermometer (as previously). On entering temperature value, accept it by pressing **Print/Enter** key. Temperature adjustment process is completed, and the display indicates name of the parameter: < **P1.3 THERM CAL.>.**

For moisture analysers with maximum heating temperature of 250 °C, the temperature adjustment process is likewise, only the temperature values are higher for each part of the process.

9.5. Drying process test

<TEMPERATURE TEST> parameter allows to control correctness of thermometer indications. In order to test the drying chamber and the drying process you need to use a special adjustment set (thermometer and the thermometer holder). The set is an optional accessory of a moisture analyser (the same that is used for temperature adjustment of the drying chamber). For information on how to assemble the set go to *Temperature adjustment section*.

To start the procedure, first install the adjustment set into the drying chamber, next enter <CAL> menu and run the process **<P1.4 TEMPERATURE TEST>** following the instruction below.
After the thermometer has been assembled, close the drying chamber and proceed to the test.

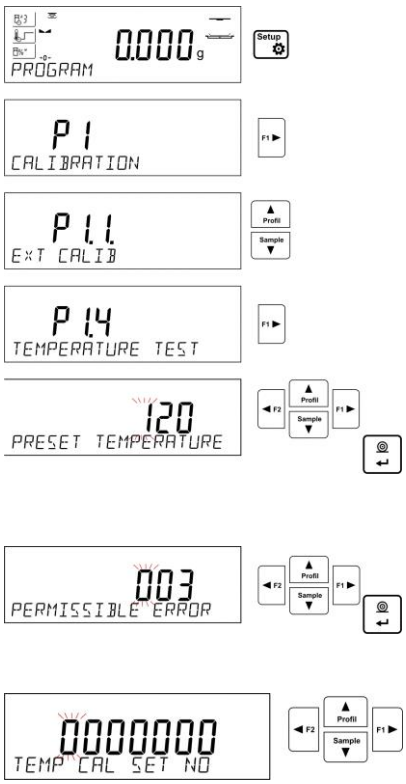

Enter P1 CAL menu, next run <P1.4 TEMPERATURE TEST> procedure. Following the below instruction set the temperature test parameters, next run the test.

Use navigating arrows to set specified test temperature, press ENTER to confirm.
Enter permissible temperature error (user approved). Use navigating arrows to enter the specified error value, press ENTER to confirm.

Enter serial number of the temperature adjustment set, which will be used for the test.
Use navigating arrows to set the number, press ENTER to confirm.

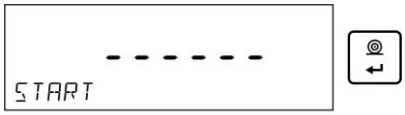

START message is displayed, press ENTER, the drying process starts and it continues until the specified temperature is reached.

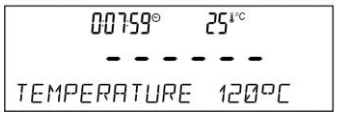

Time and sensor temperature information is displayed. The temperature is maintained for 8 minutes (like for temperature adjustment procedure)

8 minutes later you shall see a window for entering temperature read from the installed adjustment set. Use navigating arrows to set the temperature, press ENTER to confirm.

----------Temperature test----------
User
ADMIN
Date
02.01.2000
Time
4:53:16
Scale Type
MAR_NP
Balance ID
12345678
Temp. cal. Set. no.
721
Preset temperature
120°C
End temperature
120°C
Measured temperature
119°C
Permissible error
+/- 3°C
Status
OK ----

Signature

The result of the test may be printed on a printer conected to the balance.
Look left to see an example of a report.

10. DETERMINING PRINTOUT CONTENT

10.1. Adjustment report

P5.1 CAL. REPORT, is a group of parameters enabling user to declare data that is to be printed on an adjustment printout.

Variable	Overview
PROJECT	Option enables naming the project (name associated with a particular type of weighing). The name may consist of 16 characters maximum.
CALIB TYPE	Option enables printing out the type of the adjustment being carried out.
USER	Option enables printing out the name of a logged-in user.

PROJECT	Option enables printing out the name of the project (see parameter Project).
DATE	Option enables printing out the date of the carried out adjustment.
TIME	Option enables printing out the time of the carried out adjustment.
BALANCE ID	Option enables printing out the balance ID number.
CAL. DIFFER	Option enables printing out the difference between mass of an adjustment weight measured during the last adjustment and the current measured mass of this weight.
DASHES	Option enables printing out dashes that separate the date of a printout from a signature.
SIGNATURE	Option enables providing an area for the signature of a user performing the adjustment.

For the parameters described above, one of these values must be selected:

NO - do not print
YES - print

An exemplary report:

```
--------------Cal.  Report---------------
Calib. type                    Internal
User                             Admin
Project              Project name-1
Date                        04.06.2013
Time                      10:54:27 AM
Balance ID                     353870
Cal. differ.                   0.045 g
----------------------------------------
Signature:

.......................................
```

10.2. Header, footer, GLP printouts

HEADER	group of parameters enabling to declare data that is to be printed on a header printout.
GLP PRINTOUT	group of parameters enabling to declare data that is to be printed on a measurement result printout
FOOTER	group of parameters enabling to declare data that is to be printed on a footer printout

Printout variables list:

Variable	Overview	Active for
WORKING MODE	Option enables printing out the name of a working mode.	Header Footer
BALANCE TYPE	Option enables printing out the balance type.	Header Footer
BALANCE ID	Option enables printing out the balance ID number.	Header Footer
USER	Option enables printing out the name of a logged-in user.	Header GLP printout Footer

PRODUCT	Option enables printing out the name of a currently selected product.	Header GLP printout Footer
DATE	Option enables printing out the printout date.	Header GLP printout Footer
TIME	Option enables printing out the printout time.	Header GLP printout Footer
VARIABLE 1	Option enables printing out the value of VARIABLE 1.	Header GLP printout Footer
VARIABLE 2	Option enables printing out the value of VARIABLE 2.	Header GLP printout Footer
NET	Option enables printing out net weight value in a basic unit (calibration unit).	GLP printout
TARE	Option enables printing out the tare value in the current unit.	GLP printout
GROSS	Option enables printing out the gross mass value in the current unit.	GLP printout
CURR.RES	Option enables printing out the current measurement result (NET weight) **in a current unit**.	GLP printout
CAL.REPORT	Option enables printing out a report from the last adjustment, according to the settings declared for the adjustment report printout (see sec. 14.1 of this user manual).	Header GLP printout Footer
DASHES	Option enables printing out separating dashes.	Header Footer
EMPTY LINE	Option enables printing out an empty separating line.	Header Footer
SIGNATURE	Option enables providing an area for the signature of a user performing the adjustment.	Footer
PROFILE	Option enables printing out selected profile name.	Header GLP printout Footer
NSTD. PRNT.	Option enables printing out one of 100 non-standard printouts on the footer printout. The way of entering non-standard printouts is described further down this user manual.	Header GLP printout Footer

For the parameters described above, one of these values must be selected:

NO - do not print
YES - print

Exemplary reports:

Header

```
----------------------------------------
Working modes                  Weighing
Date                         24.07.2013
Time                            7:37:30
ScaleType                            AS
Balance ID                     10353870
User                         ADMIN ENG
Product                         Tablet
```

GLP printout

```
Date                         04.06.2013
Time                        11:11:24 AM
Product                          NAZWA
    0.000 g
```

Footer

```
----------------------------------------
Date                         24.07.2013
Time                             7:41:10
User                         ADMIN ENG

Signature

.........................................
```

10.3. Drying process report printout

P5.5 DRYING PROCESS REPORT, is a group of parameters enabling user to declare data that is to be printed on a Drying Process Report printout.
The Drying Process Report is divided into three individually customized sections: the header, the measurement, the footer.
The settings are valid for Drying Process mode exclusively.

Printout variables list:

Variable	Overview	Active for
DATE	Option enables printing out the printout date.	Header
TIME	Option enables printing out the printout time.	Header
SCALE TYPE	Option enables printing out the balance type.	Header
BALANCE ID	Option enables printing out the balance ID number.	Header
USER	Option enables printing out the name of a logged-in user.	Header
PRODUCT	Option enables printing out the name of a currently selected product.	Header
PROGRAM	Option enables printing out the name of a currently selected drying program.	Header
DRY. PARAM.	Option enables printing out the drying parameters with accordance to which the sample is to be dried.	Header
VARIABLE 1	Option enables printing out the value of VARIABLE 1.	Header
VARIABLE 2	Option enables printing out the value of VARIABLE 2.	Header
START MASS	Option enables printing out net weight value in a basic unit (calibration unit).	Header
BLANK LINE	Option enables printing out an empty separating line.	Header Footer

TIME/RESULT	Option enables printing out time of the drying process result, the value is printed at real time in the course of the drying process, time interval for the printout is set in drying process parameters	Measurement
STATUS	Option enables printing out the status of drying process summary (Competed/Aborted).	Footer
DRYING TIME	Option enables printing out the total drying time.	Footer
END MASS	Option enables printing out the output mass of a tested sample.	Footer
RESULT	Option enables printing out the final result of the drying process.	Footer
SIGNATURE	Option enables providing an area for the signature of a user performing the measurement.	Footer
NSTD. PRNT.	Option enables printing out one of 100 non-standard printouts. The way of entering non-standard printouts is described further down this user manual.	Header Footer

For the parameters described above, one of these values must be selected:

NO - do not print
YES - print

10.4. Non-standard printouts

The balance software enables entering 4 non-standard printouts. Each of them can consist of approximately 160 characters.

Non-standard printout may include:

- variables dependent on the working mode and other needs (mass, date etc.)
- permanent text from the user menu, remember to use capital letters exclusively, no polish signs allowed
- Non-standard printout can consist of 160-character long string.

10.4.1. Inserting Text

List of variables mutual for all working modes, having the same values:

%%	Printout of a “%” character
%V	Current net mass in the current unit
%N	Current net mass in the basic unit
%G	Current gross mass in the basic unit
%T	Current tare mass in the basic unit
%D	Current date
%M	Current time
%I	Balance number
%R	Program number
%P	Project number
%U	User number
%F	Name of a current function – working mode

%C	Date and time of the last adjustment
%K	Type of the last adjustment
%S	Currently weighed product
%Y	Deviation for the last adjustment
%1	Variable 1
%2	Variable 2

Non-standard characters used in designing non-standard printouts

\\	a single „\” character
\C	CRLF
\R	CR
\N	LF
\T	Tabulator
\F	Form feed (for PCL printers)
%E	Paper crop for EPSON printers

Every single printout can contain max 160 characters (letters, numerals, non-standard characters, spaces). You can apply non-standard characters depending on type of data that is to be printed out.

Example 1:

“RADWAG”
DATE: <current measurement date>
TIME: <current measurement time>
PRODUCT MASS: <current mass indication>

******SIGNATURE:.....*

<current working mode>

Enter printout content settings and design the printout using respective data variables and characters for text format.

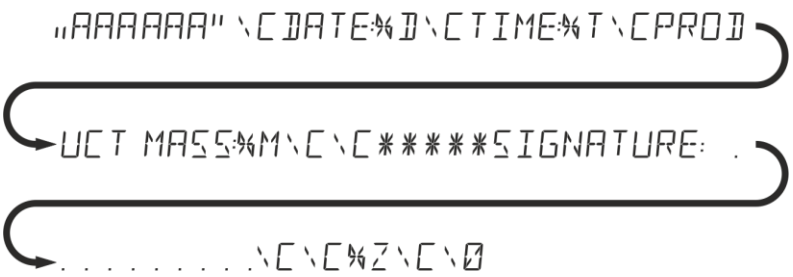

Example 2:

To crop the paper after the printout had been carried out by EPSON printer (if the printer is equipped with an autocutter blade) the user must select (for a given printout: HEADER, GLP PRINTOUT or FOOTER) an option of non-standard printout 1,2,3 or 4 with <%E> value available and select this printout for a given printout settings.
In such case <SUFFIX> command should stay empty.

Paper must be cropped underneath the FOOTER.
Example settings:
P5.4.14 STANDARD PRINTOUT | NSD. PRN. 1
P5.5 NSD. PRN. 1 | %E

Options for inserting texts:

- **By means of balance keyboard**

F2 ►	Press to select a character to be replaced or to move a cursor or an active (blinking) character to the right.
F4 ◄	Press to select a character to be replaced or to move a cursor or an active (blinking) character to the left.
F3 ▼	Press to change the character by one value down
F1 ▲	Press to change the character by one value up
→0← Delete	Press to delete a character
→T← Insert	Press to insert a character

- **By the means of computer keyboard of the USB type**
  A computer keyboard of USB type can be connected to a balance, this enables easier and quicker editing of the printouts.
  Willing to insert any text, it is necessary to select a respective menu option and, using the keyboard, type the text. Next the text must be confirmed by means of Enter button.

  CAUTION: It is important to type variables, used for non-standard printouts, in capital letters.

10.5. Variables

Variable is defined as alphanumeric data which can be linked to printouts, products or other information related to weighing. Every variable is characterized by its content, the content must be given. Variables are used for entering various data during the weighing process, e.g. serial number or batch number. The program allows to enter two variables. Each can consist of max 32 characters.
In order to input a variable content, the user needs to enter variable settings (parameter P5.9 – VARIABLE 1 or P5.10 – VARIABLE 2) and enter the respective values using direction keys (arrows) on the balance keypad or a computer keyboard. Procedure for entering texts is the same as for non-standard printouts.

11. DATABASES

The balance software has 3 databases that can be edited (USERS, PRODUCTS, TARES) as well as 2 databases (WEIGHINGS AND ALIBI), to which all the measurements, carried out by means of the balance, are saved.

Data saved within particular databases:
USERS – 10 different users.
PRODUCTS – 1000 different products.
PROGRAMS – 100 different drying programs.

TARES – 10 different masses of the packaging.
WEIGHINGS – 1 000 consecutive measurements
DRYING PROCESS REPORTS – 1 000 consecutive measurements

11.1. Users

Each user is characterized by the following data:
NAME (30 characters), **CODE** (6 characters), **PASSWORD** (8 characters, digits only), **ACCESS** (USER, ADVANCED, ADMIN), **LANGUAGE** (any of the available).

Access levels
The balance software has three access levels: USER, ADVANCED, ADMINISTRATOR.
Once the balance is switched on, the display stays active all the time, this enables carrying out mass measurements even when no user is logged-in.
User parameters, databases and software functions may be edited depending on the access level granted to a particular user. Access levels are presented in the table below.

Access levels	Permissions
USER	Access to parameters of the submenu <Reading>, permission to change settings for parameter group <Other> except for <Date and Time>. Permission to start and carry out all the weighing processes. You can preview information in <Databases> and define universal variables.
ADV	Access to editing parameters of the submenu: <Reading>; <Working modes>; <Communication>; <Devices>; <Other> except for <Date and Time>. Permission to start and carry out all the weighing processes.
ADMIN	Access to all user parameters and functions, permission to edit databases.

In order to add a user, follow the scheme shown below, add a user and assign a name to him/her.

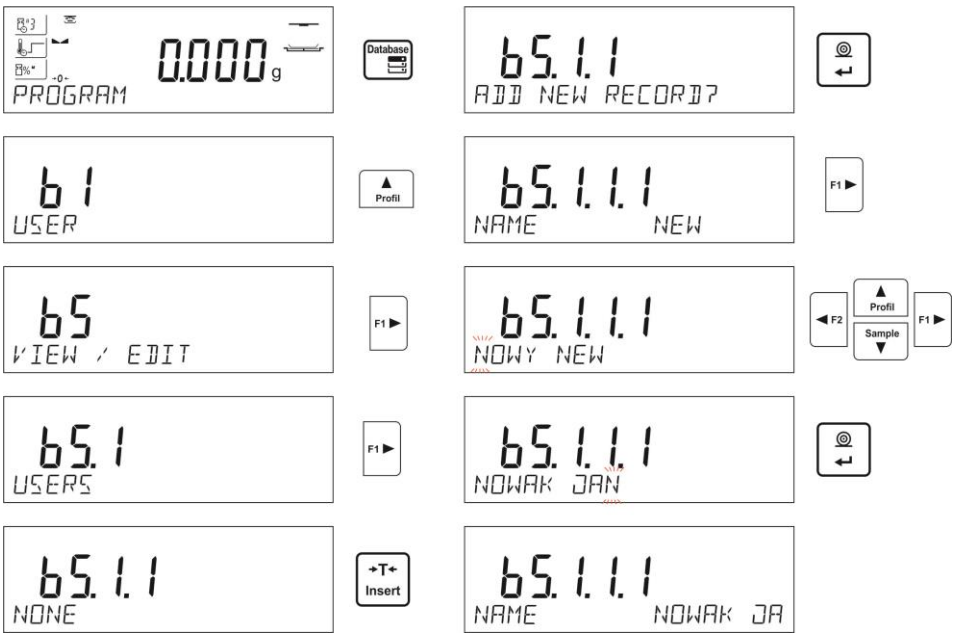

Once the user name is added, enter the following:
User code – Max 6 characters,
User password – Max 8 numbers.

Next select:

- Access level (USER, ADV, ADMIN)
- Language

In order to remove a user, follow the below procedure:

- Enter the user database
- Select the user that is to be removed from the list
- Press [→0← Delete] button
- The software shows <DELETE?> message in the bottom line
- Confirm by pressing [◎ ↵] button
- When confirmed, the software removes the selected user from the list

11.2. Products

PRODUCTS – 1000 different products. The following data can be inserted for each product: NAME (30 characters), CODE (6 characters), EAN (16 characters), MASS (with the accuracy of a reading unit), TARE (mass of the packaging relating to a particular product with the accuracy of a reading unit), MIN (low limit, to be inserted with the accuracy of a reading unit), MAX (high limit, to be inserted with the accuracy of a reading unit), TOLERANCE (tolerance limits to [±], entered as a % of the target mass).
In order to add a product, enter products database and add name of the product along with respective data (follow the procedure as in the section above).

11.3. Drying programs

PROGRAMS – 100 different drying programs. The following data can be inserted for each program: NAME (30 characters), CODE (6 characters), DRYING MODES (drying mode: STANDARD/QUICK/MILD/STEP), DRYING PAR. (drying parameters to be valid when drying a sample, these are temperature, time, the parameters must be completed depending on a selected mode), FINISH MODE (auto switch-off options for a drying process: AUTO1, AUTO2, AUTO3, AUTO4, AUTO5, MANUAL, TIME-DEFINED, DEFINED), FINISH PAR. (parameters for finishing the process, the parameters are to be valid when drying a sample, these are time, difference of weight, the parameters must be completed depending on a selected auto switch-off option>, RESULT (unit for a weighing result obtained during drying process: %M. %D, %R, G, the unit is to be displayed and printed while drying a sample), PRINTOUT INTERVAL (time interval between successive measurement printouts performed during the drying process, it is given in seconds, range 0-120s).

In order to add a program, you should enter programs database and add name of the program (follow the procedure as in the section above).

11.4. Tares

TARES – 10 different weights of the packaging. The following data can be inserted for each packaging: NAME (30 characters), TARE (packaging weight, enter a value with the accuracy of a reading unit).
In order to add tare – packaging weight, enter tare database and add name of the tare along with respective data (follow the procedure as in Users section).

11.5. Weighings

Weighings database is non-editable i.e. the data relating to the weighings is saved automatically. A user has a possibility of viewing this data and printing it out or exporting it to a PENDRIVE (if such a need occurs go to later sections for more information on export).
The balance software allows you to save and store up to 5 000 measurements carried out on the balance. This occurs automatically, after pressing the <PRINT> button, no additional actions or settings change is needed.
Additional data is saved along with the measurement.

- Date of the measurement
- Time of the measurement
- Measurement result (mass)
- Tare value
- Name of the product that has been weighed
- Person carrying out the measurement (logged-in user)
- Working mode for which the measurement has been carried out
- Value of variable 1 and 2

The software saves the measurements in a so called loop, i.e. when the measurement 5 001 is saved, the measurement 1 is automatically deleted from the balance's memory.

The measurements saved in the balance's memory cannot be deleted.
It is possible for a user to view and print out the data saved in the memory.

Procedure:

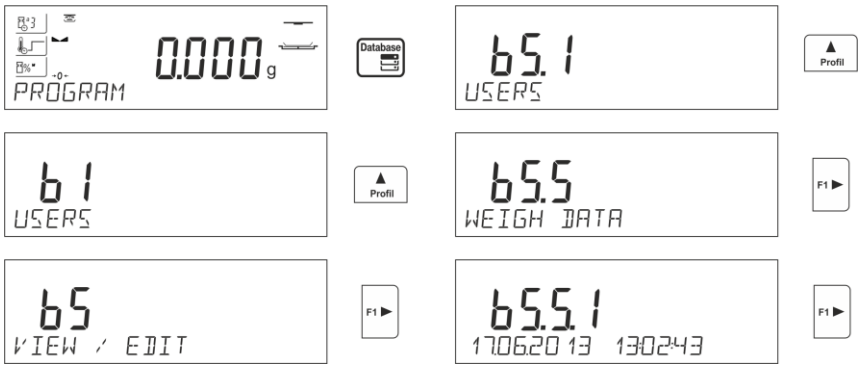

Each measurement is saved with its individual number. The format is: b4.4.n, where <n> is the consecutive number of the saved measurement. In the bottom line the date and time are displayed for every single measurement.

To swap between measurements recorded in database, use the arrow buttons, F1 ▲ or F3 ▼. Pressing one of these buttons lets the user move to the next measurement either up or down the list.
To view the remaining data relating to a respective measurement, first select the measurement in question, next press F2 ► button:

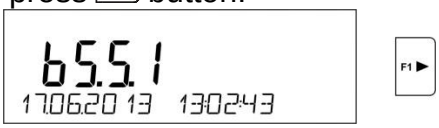

The software automatically shows the data relating to the measurement, data is presented in the bottom line of the balance display.

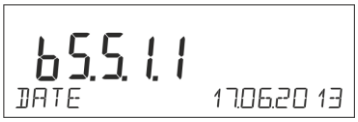

To swap between data relating to the measurement, press F1 ▲ or F3 ▼. The data relating to the measurement can be printed out by selecting the option <PRINT> and pressing button.

An exemplary printout:

Date 21.06.2013
Time 13:05:02
User
Product

Tare 0.000 g
Gross 0.000 g
0.000 g
----------Cal. report.----------
Cal. Type Internal
User
Project 1234567890123459
Date 16.07.2013
Time 13:27:09
Balance ID 10353870
Cal. diff. -0.004 g

Signature
…….....

The data that is to be printed out, depends on the settings of parameter P5.3 GLP PRINTOUT. Parameters selected for the printout (<YES> option), are printed out also on measurement result printout for WEIGHINGS database (*see sec. 9.2.)*

11.6. Reports on drying pprocess

The balance memory allows the user to save and store up to 1 000 reports on drying processes performed by means of the moisture analyser.
The reports are saved automatically upon completion of each drying process, no additional action needs to be taken, no settings modification performed.
Additional data is saved along with the measurement.

- Date of the measurement
- Time of the measurement
- Initial sample weight
- Status
- Time of the drying process
- Output sample weight
- Measurement result (mass)
- Product
- User

- Program
- Value of variable 1 and 2

The software saves the measurements in a so called loop, i.e. when the measurement 1 001 is saved, the measurement 1 is automatically deleted from the balance memory.

The measurements saved in the balance's memory cannot be deleted.
It is possible for a user to view and print out the data saved in the memory.

Procedure:

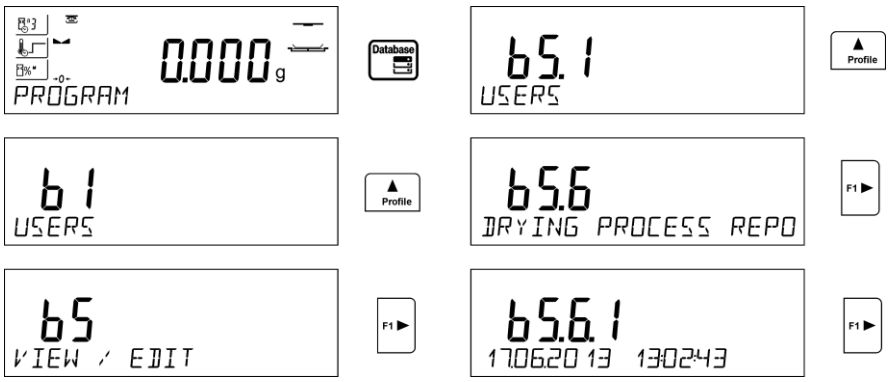

Each measurement is saved with its individual number. The format is: b5.6.n, where <n> is the consecutive number of the saved measurement. In the bottom line the date and time are displayed for every single measurement.

To swap between measurements recorded in database, use the arrow buttons, ▲ Profil or Sample ▼. Pressing one of these buttons lets the user move to the next measurement either up or down the list.
To view the remaining data relating to a respective measurement, first select the measurement in question, next press F1 ▶ button:

The software automatically shows the data relating to the measurement, data is presented in the bottom line of the balance display.

To swap between data relating to the measurement, press ▲ Profil or Sample ▼. The data relating to the measurement can be printed out by selecting the option <PRINT> and pressing button.

An exemplary printout for a particular record:

-------Report on drying process------

Date	21.06.2013
Time	13:05:02
User	John Smith
Product	Tea
Program	Test
Drying parameters	
Drying mode	Standard
	120°C
Auto off	Auto3
	1mg/60s
Result	g
Interval	20s
Input weight	0.537
0:00:00	*0.537 g*
0:00:20	*0.536 g*
0:00:40	*0.518 g*
0:01:00	*0.509 g*
0:01:20	*0.508 g*
0:01:40	*0.507 g*
0:02:00	*0.507 g*
0:02:01	*0.507 g*
Status	*Completed*
Output weight	*0.507 g*
Result	*0.507 g*

To return to the weighing mode press [Units Esc] button repeatedly.

12. EXPORT AND IMPORT OF DATABASES

This option allows the user to:

- Archive data relating to the carried out weighings – WEIGHINGS database and ALIBI database.
- Copy the products, tares and users databases between balances of this series.

This can be performed by using external USB flash drive, which shall feature <**FAT files system**>
Plug the flash drive into USB 1 Type A port.

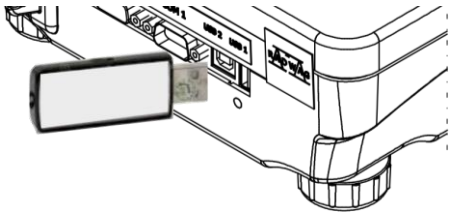

The balance automatically detects the flash drive, the message enabling operations relating to the export or import of the database is displayed.

The following options are available when entering this parameter:

- Database EXPORT
- Database IMPORT

12.1. Database esport

To export the database, select an option EXPORT.

The following functions are available:

- Export of all the databases
- Export of users databases
- Export of product databases
- Export of tares databases
- Export of weighings
- Export of weighings saved in ALIBI memory
- Export of user parameters

After selecting <ALL DATABASES> option, the balance software creates files on the flash drive. The files are of relevant names, data from individual databases is recorded in them. The files are characterized by special extensions, saved data is encoded in a way that the files cannot be read or viewed by standard computer programs.
Special computer software manufactured by RADWAG company is used to read data from database files: ALIBI and WEIGHINGS. The data from files storing information from PRODUCTS, USERS, and TARES databases is read automatically by the balance software when option <IMPORT> is enabled.

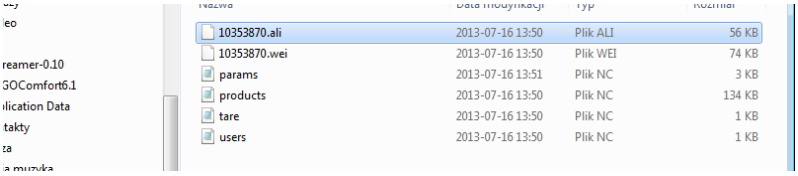

12.2. Database import

<IMPORT> function allows transfer of data, recorded in balance databases, from one balance to another. This is a quick and reliable way for entering the data without any mistakes.
To import the database, plug a flash drive to USB port, next select IMPORT option and choose one of the following:

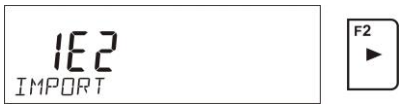

The following options are available:

- Import of all databases
- Import of users databases
- Import of products databases
- Import of tares databases
- Import of user parameters

The data from ALIBI and WEIGHINGS databases cannot be imported.

12.3. Measurement data printout

Balance software allows the user to save data, relating to a measurement, on an external USB flash drive.
The operation can be performed as follows:

- Plug a flash drive into USB port.
- Press [Units Esc] button to abandon automatically started <IMPORT/EXPORT> option.
- Set parameter P4.2.1 <DEVICES/PRINTER/PORT> to <PENDRIVE> option.
- Return to the weighing mode.
- From this moment on, every single pressing of the button [◎ ↵] results with record of measurement data (compatible with the settings for GLP0 PRINTOUT) in a text file, the text file is automatically created by the balance software. The file name is: *printout.txt*.
- Press [On/Off ⏻] button to switch the balance off, next remove the pendrive from the port and read the data on a computer. Keeping to this sequence of actions you are guaranteed that the data is saved.

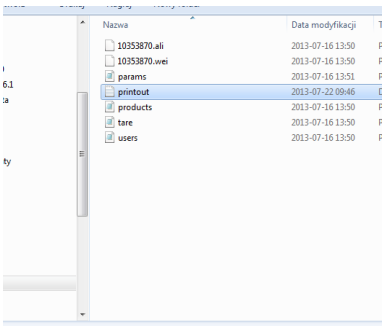

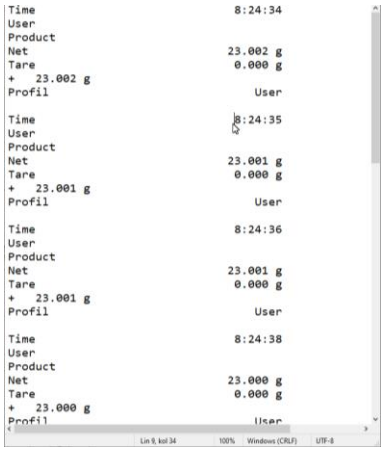

More data can be recorded in the same file. The balance software will add the data to the file that has already been created on a flash drive. Consequently, you can continue saving measurements in the same file once created.

*CAUTION: USB flash drive shall feature <**FAT file system**>.*

13. PREPARING SAMPLES FOR DRYING

This part of the manual contains information on how parameters shall be set if the user wants to obtain optimal results when carrying out tests. Rules concerning drying parameters setup are presented, which setup depends on the tested sample material.

13.1. Rules for measurement of moisture analyser humidity content

Measurement of moisture content in a tested sample is carried out by determining loss of mass in a sample by its heating (humidity evaporation from a sample).
RADWAG moisture analyser comprises two components: a precision balance and a drying chamber. Compared to standard moisture content determining methods, the measurements with application of RADWAG moisture analyser is much quicker and does not require additional mathematical calculations (a result of moisture content is previewed on an ongoing basis during product testing process).
Independently on moisture content determining method, the measurement accuracy is highly influenced by means of sample preparation and selection of testing parameters, such as:

- Sample size
- Sample type
- Drying temperature
- Drying time

In practice, the measurement accuracy is not as important as the speed of obtaining measurement result (control over technological process). Thus, heating a sample (with application of a halogen filament) carried out by a moisture analyser, makes the measurement process very time efficient and short. Measurement speed can be additionally increased by optimization of moisture analyser's parameters, which optimization is referred to tested substances.
Optimum temperature and drying time depend on sample type and size, and anticipated measuring accuracy. Selection of drying parameters can only be carried out on basis of test measurements.

13.2. Sampling and preparation

Sample features, its preparation and size are very important factors influencing the speed and accuracy of measurement process.
Means of sampling and preparation are extremely important for repeatability of measurement results, as a sample should be a representative part of tested substance.

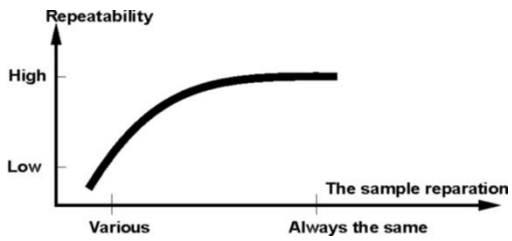

Final measurement result is conditioned by precise and considered sample preparation. A sample used for analysis has to represent the total structure of tested material. Sampling process should determine: sampling means, sample disintegrating, particle size after disintegration, sample uniformity and other. The sampling process should be carried out as quickly as possible, so that a sample does not loose or absorb humidity from surrounding area.
Applied sampling standards should match individual user needs and requirements of tested material, its consistence and sample size.

Number of samples
Increasing number of tested samples also increases statistic measurement certainty. Number of samples depends on uniformity of tested material, its purity, accuracy of applied measuring method and anticipated accuracy of obtained results.

Material mechanical disintegrating for measurements
Applied disintegrating method should be selected appropriately to tested material. Substances that are hard and brittle (crisp) can be disintegrated by cutting. Grinding such substances may cause their heating and thus humidity vaporization, resulting in unreliable measurement results. Unless a substance can be prepared for measurement otherwise than grinding, any possible moisture content loss should be calculated.

Use of high-silica sand
Ensuring optimum substance drying requires that a sample has the largest possible surface for moisture content vaporization. Test results of moisture content for substance with surface in a form of a shell (e.g. glucose syrup) or doughy (e.g. butter), can be much more reliable if a sample is mixed with a dried high-silica sand (improvement of measurement accuracy and repeatability). While using mixture, disposable weighing pan with extended brim must be applied (greater volume of a sample).

Grease in a form of paste or melting substances
Such substance requires testing with use of a filter made of glass fibre, which considerably increases active evaporation surface by separating the substance between the fibre. Initial filter drying is necessary only in case of measurements which require very high accuracy.

Liquid substances
It refers to liquid substances, which by creation of drops on their surface, caused by surface tension, may render difficulties in drying process. In such cases, it is proved to use a glass fibre filter to shorten measurement time. The filter causes separating tested liquid around the fibres, and increasing active evaporating surface. Initial filter drying is necessary only in case of measurements which require very high accuracy.

Substances with structure of leather, or temperature sensitive
In case of such substances it is proved to use a glass fibre filter. While testing, a substance is placed on a drying pan, and sample surface is covered with a filter, which protects the sample from direct heat radiation. In such case, the sample is heated by convection (which is milder than radiation).

Substances containing sugar
The surface of such substances often may caramelize during testing procedure. Therefore, it is recommended to use thin layer of a sample, and moderate drying temperature.

Sample distribution on a drying pan:

Loose materials Dried in their natural state, i.e. in their natural form or disintegrated. Sample disintegration causes smaller dispersion between the following measurements. Sample mass should not be too high, and the sample should be evenly spread on whole surface of the drying pan.	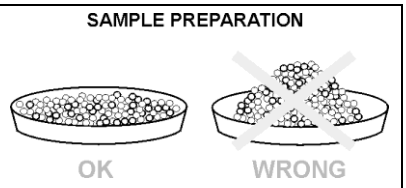

Liquid substances Semi-fluid substances are dried in their natural form. Large amount of grease (fat) occurring in some of substances makes moisture content determination difficult. In such case it is recommended to use additional components, which increase sample's active surface and aid moisture content releasing process from a sample. Such components are high silica sand, blotting paper or filter. Before drying a tested substance, initially dry the additional component, so that its humidity is close to zero.	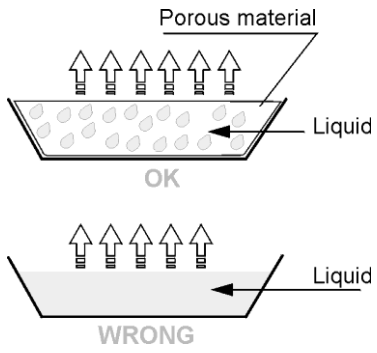
Solid objects Depending on solid object's structure (dense or loose), moisture content determining process may take short or long time. The size of solid's surface determines the speed of drying process, and measurement reliability. Thus, the surface of a solid object should be as large as possible. Since solid objects release moisture through their outer surface, sample thickness is another important factor.	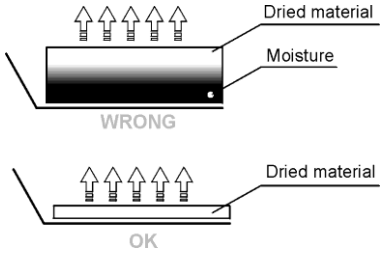

The distribution of the sample on the filter:
Spread the sample on the filter evenly with a spatula. Use the thinnest layer possible.

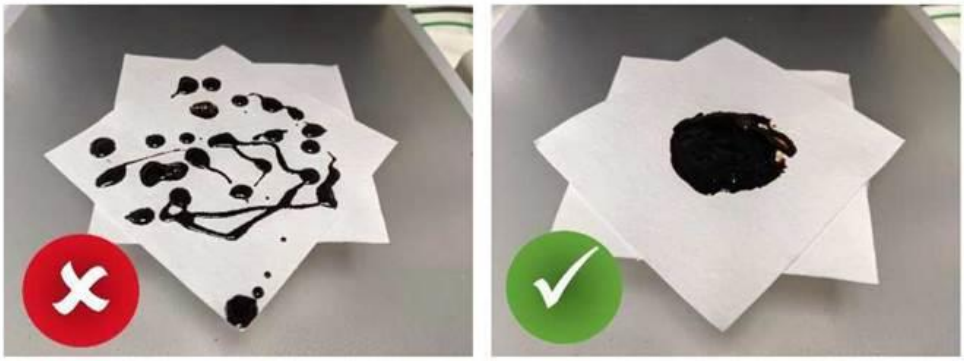

14. SELECTION OF DRYING PARAMETERS

14.1. Selecting Optimum Mass for a Sample

Sample mass influences the accuracy of measurement result and measurement time. Higher mass of a sample, causes higher amount of water (moisture content) which needs to evaporate, and therefore measurement time is also longer.
Obtaining short measurement time is feasible in case of small sample mass, but sample mass cannot be too small, as it may negatively influence required measurement accuracy.

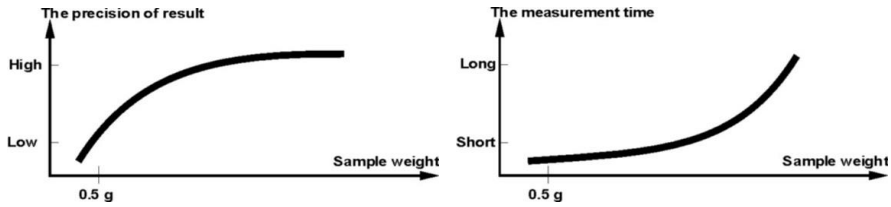

14.2. Influence of Sample Weight on Measurement Result Repeatability

Sample mass considerably influences repeatability of measurement results obtained on a moisture analyser. Relation between sample mass and repeatability is presented below.

Sample weight	Repeatability
~2 g	±0.05%
~ 10g	±0.01%

The above data refers to a model, uniform sample, containing no moisture due to the evaporation process and showing no signs of decomposition (e.g. wet high-silica sand).

The results uncertainty cannot be avoided, this is due to sample nature and moisture analyser repeatability. In practice, it means that obtained measurement result may exceed repeatability values provided above.

14.3. Drying Temperature

Drying temperature has the largest impact on drying time. Temperature value depends on type of dried substance. Too low drying temperature causes too low moisture content evaporation (under-dried sample), and consequently unnecessary extending of measurement time. Too high drying temperature causes burning of dried sample (sample overheating, chemical decomposition). Drying temperature of traditional method (using a furnace) is specified in applicable industry or company standards. Unless standards apply, then temperature should be adjusted by tests.
On selecting drying temperature value, proceed as follows:
Determine moisture content in a sample
Determine temperature of substance chemical decomposition by tests
Compare result obtained on a moisture analyser with the one of traditional method

When drying a sample with high moisture content, it is possible to shorten measurement time by selecting “quick” drying mode. In such case, the majority of moisture content is released drying temperature higher than set. Only after some time, the temperature is lowered to the set value, and maintained until completing drying process.

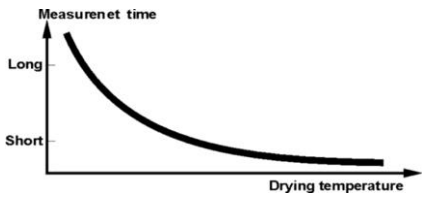

14.4. Selecting Drying Mode

The software of moisture analyser enables selecting one of four drying modes:

- Standard
- Quick
- Mild
- Step

STANDARD mode
Standard mode is the most frequently used of all drying modes. It enables accurate determining of moisture content is a dried sample.

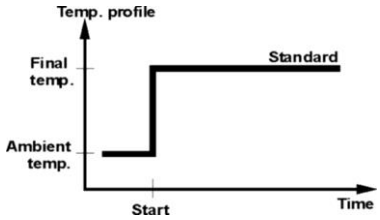

MILD mode
Mild mode is used in case of drying substances that are sensitive to rapid heat emitted by filaments operating at full power in the initial stage of drying process. This mode prevents from decomposing of substances sensitive to heat by mild temperature increase in set amount of time (time interval has to be selected by tests). Mild mode is recommended to drying samples of leather structure.

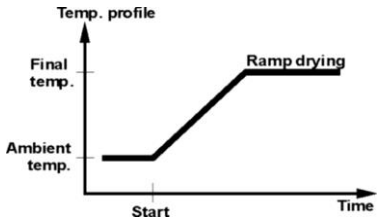

FAST mode
Quick mode is recommended to drying samples that moisture content varies from 5%, and 15%. In the initial stage of Quick mode, heating takes place at full power of the filaments, causing heating the drying chamber to increased temperature (maximum temperature value is higher by 30 % from set drying temperature). Overheating compensates heat loss during evaporation of large moisture content in the test's initial stage.

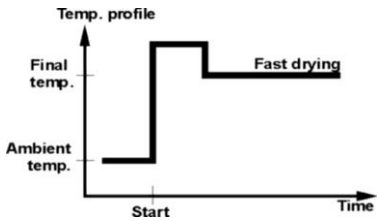

STEP mode
Enables determining up to three steps with random drying temperature. Step mode is recommended for drying substances with moisture content over 15%. Temperature and heating time in each step have to be adjusted by tests.

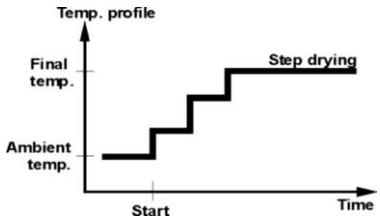

14.5. Drying Time

Drying time is set by selecting one of available finish mode criteria. This means that a moisture analyser must meet pre-set criterion (one of the requirements: mass over time, time) to automatically finish the drying mode.
Finish of drying process can be triggered by amount of time, independently on loss in mass. This criterion is used for substances that may decompose during drying process, and their mass does not reach constant value.
The second criterion is loss in mass (less than 1 mg) in defined amount of time.

Automatic finish mode (Auto switch off mode)
The operator can choose between various types of finish modes:
Automatic 1 (change 1mg/10s)
Automatic 2 (change 1mg/25s)
Automatic 3 (change 1mg/60s)
Automatic 4 (change 1mg/90s)
Automatic 5 (change 1mg/120s)
Time defined (maximum drying time 99 hours 59 minutes)
Manual (on pressing a function key)
Defined (*Δm – change of mass and Δt – change of time must be given, the former in mg, the later amounts to 120 s. maximally)*

Automatic finish mode – user defined criterion (mass/time)
The operator determines the limit value for loss of mass and time in which the loss of mass must not exceed a pre-set value. As the moisture analyser reaches the set criterion it automatically finishes the measurement (drying process).

Manual finish mode
The operator ends drying process manually by pressing START/STOP soft key on moisture analyser's display

Time defined finish mode
Drying process finish takes place on elapsing a set amount of time, independently on measurement result.

14.6. Drying Mode Analysis

For the first case, the drying mode is an asymptote. Moisture content value remains constant even after long drying time. Using this drying mode makes determination of humidity easy. The measurement result is always referred to constant value of asymptote. The result corresponds easily and it is not difficult to select a proper criterion of finish mode

For the second case the drying process is quick at the beginning, next it stabilizes. Moisture content value is never constant. Drying process mode may proceed as follows:
The sample undergoes thermal decomposition, wherein evaporation takes place and as a result the product weigh decreases. Evaporation of grease, oil, plastic or other volatile materials may take much more time than in case of water. Difficult to evaporate materials drop weight.
Result obtained using this mode may be optimistic:

- Lower temperature may slower material reaction.
- Selection of appropriate criterion may let the user recognize end of analysis, within described drying step.
- Constant drying often assures good drying results.
- Maintaining start sample weight permanently *(+10%....+20%).*

15. FUNCTIONS

- Weighing function
- Drying function

In order to change the current working mode, press

button and follow the bellow instruction.

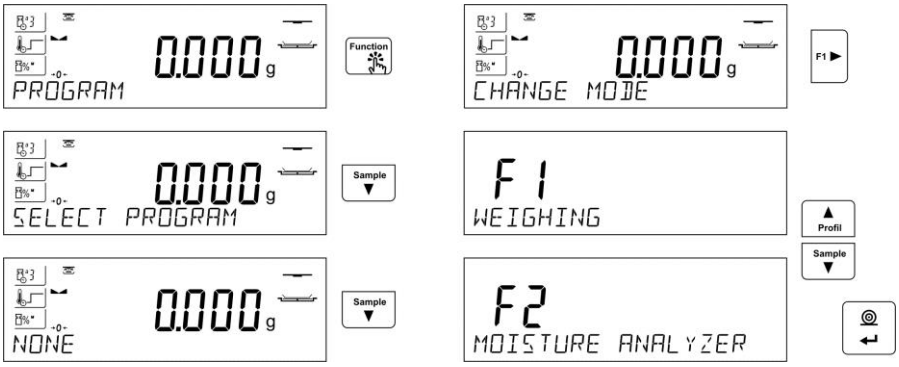

Go to other sections of this manual to read information on function settings.
The moisture analyser when powered operates in a Drying Mode.

16. WEIGHING

Moisture analyser offers two weighing modes. The first, <WEIGHING>, used for determining weight of measured loads, the second, <MOISTURE ANALYSER>, used for determining humidity content of a tested sample. This part of manual informs on how to use the device as a balance, i.e. how to operate <WEIGHING> mode. Some options and settings are similar for both modes therefore detailed description for their usage and settings is to be found in this section. Section overviewing <MOISTURE ANALYSER> mode describes specific settings enabled for moisture analyser.

16.1. Good Weighing Practice

In order to ensure long lasting use of a balance plus correct and reliable measurement of weighed loads, follow below procedures:

- Start the balance with no load on the weighing pan (permissible value of load on the weighing pan on balance start is ±10% of its maximum capacity).

- Load the weighing pan steadily avoiding shocks:

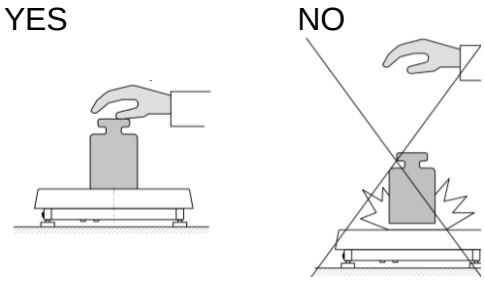

- Place weighed loads centrally on the weighing pan:

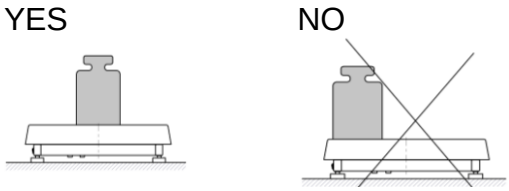

- Avoid side loading, in particular side shocks:

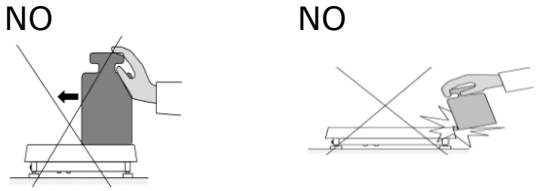

The balance requires adjustment before the weighing process is launched or in case of drastic change of ambient conditions at a workstation (e.g. ambient temperature change at a workstation more than 3°C). The procedure of balance adjustment is described further down this user manual.

- Before the start of weighing procedure, it is recommended to load the weighing pan a few times with mass close to balance max capacity,
- Check if unloaded balance indicates “precise zero” and whether measurement is stable (→0← and ◣◢ pictograms display), if not, press **→0←/Delete** button,
- Place the load on the weighing pan, wait until it is stable and read,
- Mass indication of a load placed on the weighing pan can be tared multiple number of times by pressing **→T←/Insert** button (pay CAUTION not to exceed maximum capacity of a balance by applying multiple tare function).

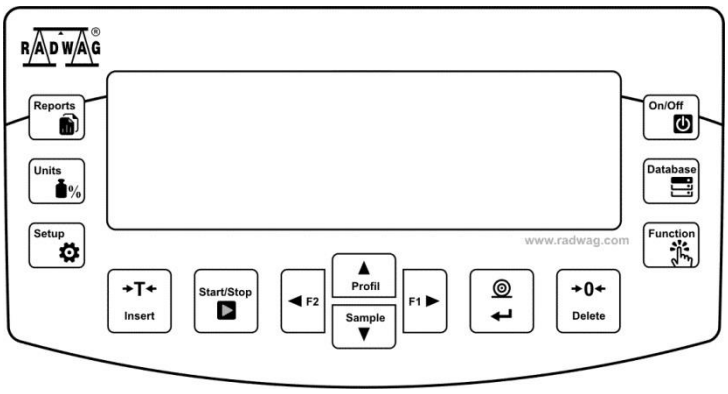

The balance shall stay plugged to the mains in between measurement series. It is recommended to switch off the balance display by pressing **ON/OFF** button. On repeated **ON/OFF** button pressing, the balance is ready for operation, the measurements can be carried out again.

16.2. Balance Zeroing

Zeroing is a function allowing to zero mass indication. In order to zero mass indication, press [→0← Delete] button. Mass indication of zero value shall be displayed together with precise zero →0← and stability ◣◢ pictograms.
Zeroing process is an equivalent for determining new zero point, recognized by the balance as precise zero. Zeroing is possible only for stable status of display indication.

CAUTION!
*Zeroing the display indication is possible only within ±2% range of instrument’s maximum capacity. If the zeroed value is above ±2% of the maximum capacity, then the software indicates a respective error message **Err2**.*

16.3. Balance Taring

Taring is a function allowing to determine net weight of a measured object. In order to determine net weight of the object, place object's container (packaging) on the weighing pan, and on stabilization of measurement result press [→T← Insert] button. The display indicates mass equal zero and symbols: Net and ◣◢. On taking off the load and its packaging from the weighing pan, the display indicates sum of total tared mass with minus sign.

The software enables assigning tare value to a database-stored product. Using this option, the software automatically uploads data on tare value for a particular product upon its selection from the database.

CAUTION!
Taring negative values is impossible. On taring negative values the balance responds with an error message. In such case, zero balance indication and repeat taring procedure.

Manual tare determination

Procedure:

- While in optional mode press quick access key F with <ENTER TARE> function assigned (for setup instruction read F Shortcut Keys section).
- Wait for a respective window to open.
- Use the arrow buttons to enter the tare value and press [◎ ↵] button.
- The balance returns to the weighing mode, and the display indicates entered tare value with minus „**–**" sign.

Selecting tare out of TARE DATABASE

Procedure:

- While in optional mode, press quick access key F with <SELECT TARE> function assigned (for setup instruction read F Shortcut Keys section), or click <SELECT TARE> option available upon pressing [Function] button.
- Wait for the first packaging weight, recorded in tare database, to be displayed.
- Use the arrow buttons to select the tare which is to be recalled and press [◎ ↵] button,
- The balance returns to the weighing mode, and the display indicates entered tare value with a minus „–" sign.

or

- While in any working mode, press [Database] button.
- Enter b3 <TARE> option.
- Wait for the first packaging weight, recorded in tare database, to be displayed.
- Use the arrow buttons to select the tare which is to be recalled and press [◎ ↵] button.
- The balance returns to the weighing mode, and the display indicates entered tare value with a minus „–" sign.

AUTOTARE function

Autotare function provides automatic taring of the packaging during the weighing process when packaging mass for each of the product is different. Description of this function is to be found further down this manual.

Deleting tare

Entered tare value can be deleted by pressing [→0← Delete] button on the overlay or by entering tare value of 0.000g (see description above).

16.3.1. Weighing Profiles

In order to make operation with the balance easier, 4 various profiles have been designed. Parameters for these profiles have been set (and saved) in a way ensuring that the weighings are carried out optimally for particular requirements and conditions.
Profile parameters concern settings of a given working mode, they are grouped in parameter: *Setup/Working modes/Weighing/Readout*.
For detailed description of Profile settings read the next section of this user manual.

Profile types:

- **User** – basic profile, filters settings provide quite fast and precise measurement.
- **Fast** – profile set to enable fast measurement of mass of any size regardless of the selected working mode. Fast profile gets activated automatically at the first balance start-up. For Fast profile, the parameters settings enable obtaining the final result as fast as possible.
- **Fast dosing** – profile intended for dosing, it is set to enable fast dispensing of product.
- **Precision** – profile set to enable precise measurement of mass of any size regardless of the selected working mode. For Precision profile the weighing process takes a lot of time, but this guarantees the most precise weighing result.

Caution: as an operator you can modify all profile settings only for User profile, when it comes to the remaining default profiles (Fast, Fast dosing and Precision) they can only be modified partially.

Name of currently selected profile is displayed in the bottom line. The profile can be selected separately for a given working mode. The most recently used profile is remembered for each working mode (along with all introduced modifications), the mode, when activated, is run with the most recently used profile.

Procedure:

* Press [Function] or **F** quick access key to which <**PROFILE**> option is assigned (for detailed instruction on how to set quick access key read section *F Quick Access Keys* or select **<PROFILE>** option).
* Select the profile using navigation keys and press [↵] key.
* The balance returns to weighing and resumes operation in accordance with selected profile.

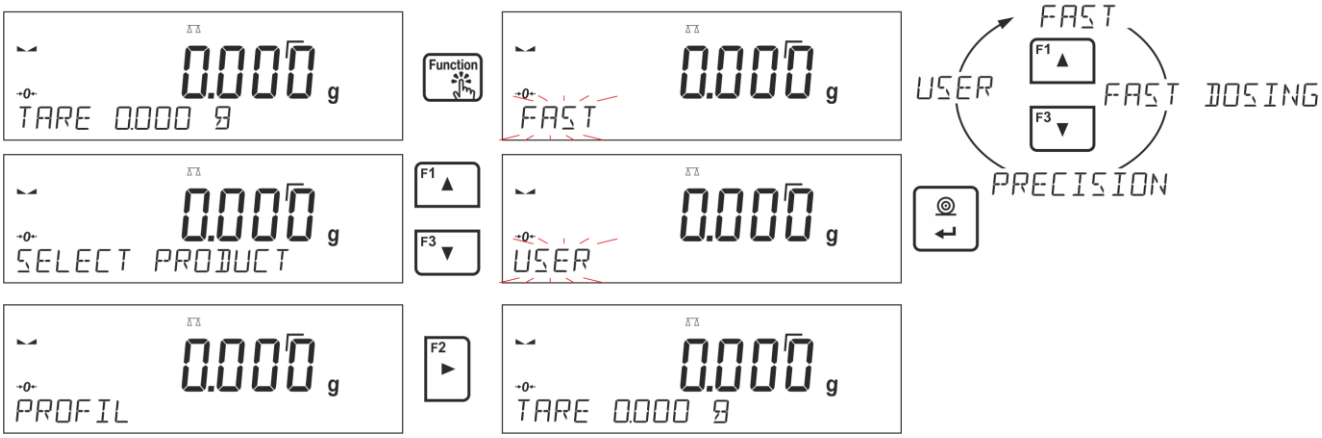

16.4. WEIGHING Mode Settings

The software allows setup of operating parameters (filters, value release and autozero function, deleting the last digit and other settings) separately for each working mode. As an operator you can modify all profile settings only for **User** profile, when it comes to the remaining default profiles (**Fast, Fast dosing, Precision**) they can only be modified partially, i.e. you are not allowed to change **Filter and Value release** parameters for these profiles, the said parameters are set to default factory values.
It enables customizing the instrument and utilizing its properties depending on your needs and expectations, or on specific requirements for selected working mode; as a result the device operation is quick and easy.

Setting filter level (option disabled for the following profiles: Fast, Fast dosing, Precision)

Filter settings adjustment depends on the working environment. For the best possible conditions the filter can work in a very fast mode (V.FAST value for Filter parameter); however, if the conditions are poor (shakes, drafts), the filter should be set to slow or very slow option (SLOW or V. SLOW value for Filter parameter). The effectiveness of the filter is different throughout the weighing range. The filter works slower when “approaching” the weighed mass, it works more intensively for weighed mass within the set range of the filter (the parameter for setting filter range is accessible only from the service menu – the user does not have any access to it).
Depending on the filter, the weighing time is shorter (V.FAST and FAST) or longer (SLOW and V. SLOW).

Value release (function unavailable for the following profiles: Fast, Fast dosing, Precision)

Since ambient conditions at a workplace vary, it is necessary to determine the value release parameter in the most preferable way enabling balance adaptation, parameter options are: FAST.+REL., FAST or RELIABLE. Depending on the selected option, weighing time is either shorter or longer.

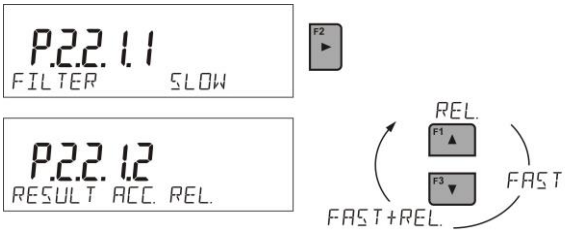

Autozero function

The software features an autozero function (Auto) ensuring precise mass indication. This function automatically controls and corrects zero indication. When Autozero is enabled, it compares balance indications at declared time intervals e.g. 1s, provided that weighing pan is unloaded and display indication is close to zero. If results vary less than the declared AUTOZERO range e.g. one division, balance zeroes automatically, stable measurement result pictogram – ◣◢**,** and precise zero pictogram – →0← are displayed.
If AUTOZERO function is enabled, then each weighing process starts from precise zero point. There are, however, some cases when this function can be a disturbing factor for the measuring process; e.g. very slow placing of a load on the weighing pan (load adding). Here, zero indication correction can also correct actual indication of loaded mass.

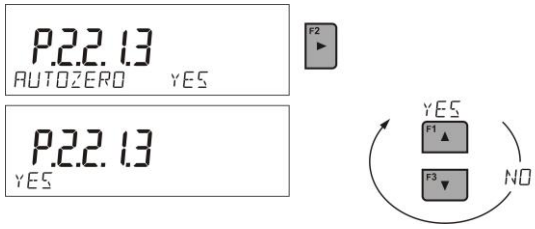

Last digit display

Function enables/disables displaying the last digit of decimal place for a weighing result.

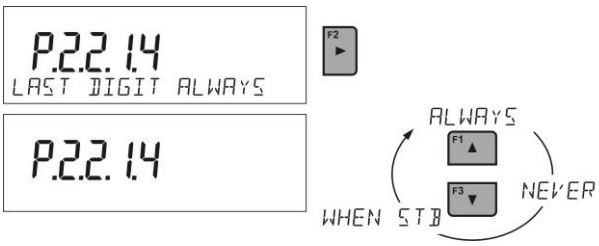

Balance ambient conditions

Parameter relating to ambient and environmental conditions in which the balance operates. There are two options: STABLE and UNSTABLE. Selecting STABLE mode makes the balance work much faster, i.e. weighing takes much less time than for UNSBABLE mode. If the ambient conditions are unstable it is recommended to use UNSTABLE mode. By default, the parameter is set to STABLE option.

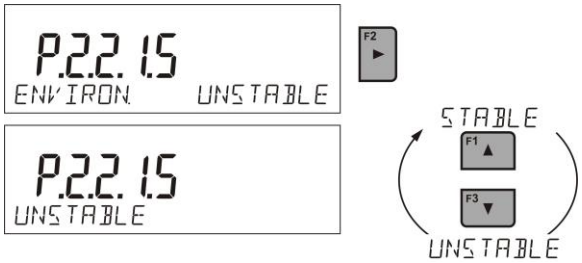

16.4.1. Autotare

Autotare is used for quick determination of net weight for loads with different tare values, wherein they are measured one after another.
When the function is active (<AUTOTARE> parameter set to <YES> option), the operating process takes the following steps:

- Make sure that the weighing pan is empty and press button responsible for zeroing,
- Put product packaging on a weighing pan,
- After measurement stabilization, **automatic taring** of the packaging mass proceeds (**Net** marker appears in the upper part of the display),
- Put product that is to be packed into the packaging;
- The display shows net weight of the product;
- Take off the product together with the packaging;
- The balance cancels tare value (packaging weight recorded in balance storage during the first step of the operating process) after the gross weight value (set in **<AUTO THRES>** parameter) has been exceeded;
- Put packaging of the next product on a weighing pan, automatic taring of the packaging weight proceeds after measurement stabilization (**Net** marker appears in the top section of the display);
- Put a next product that is to be packed.

For correct operation of the balance with AUTOTARE function it is necessary to adjust the threshold value.

<AUTO THRES> parameter is connected with the following functions:

- automatic tare,
- automatic operation,

No automatic taring takes place as long as the gross weight value stays within the range set in **<AUTO THRES>** parameter.

16.4.2. Print Mode

Function designed to enable print mode setting, it activates key.
Print mode options:

- <WHEN STAB>, for this option stable measurement result, along with the settings for parameter <GLP PRINTOUT>, is sent to the printer port. On pressing key, when the result is not stable (no marker on a display), the balance software sends the measurement result to the port after reaching stability for the measurement.

- <EACH>, for this option every single pressing of button results with sending the measurement indication to the printer port along with the settings for <GLP PRINTOUT> parameter. Every single indication is sent (stable and unstable). For unstable indication <?> character appears at the beginning of the printing frame. **This function applies to non-verified balances exclusively.**
- <AUTO> - select this option to enable automatic printing of measurements. If this option has been selected, remember to set <AUTO THRES> parameter to suit your needs.

Automatic operation procedure:

- Press button to zero the balance (marker of stable measurement and zero marker →0← are shown on a display).
- Deposit load, the balance sends the first stable measurement to the printer port.
- Remove the load from the pan.
- The next measurement is possible when the indication is lower than the set value of <AUTO THRES.> parameter (next measurement does not require zero value).

Procedure:

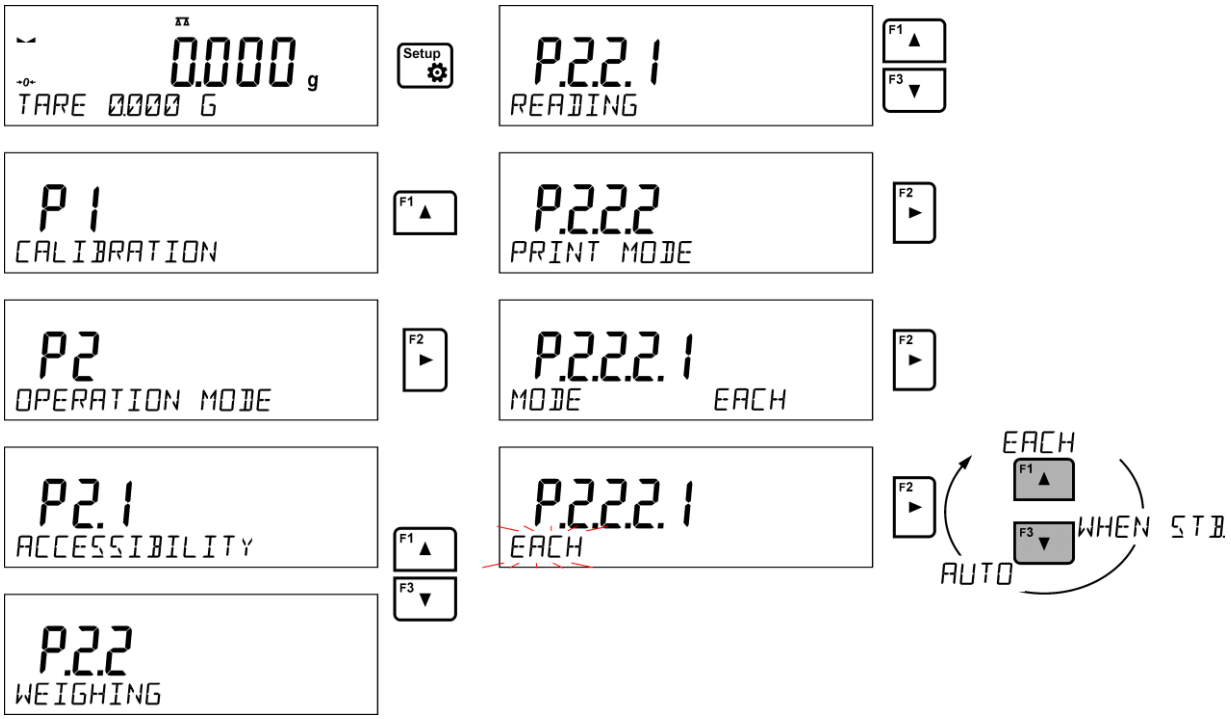

For automatic operation it is necessary to adjust the threshold value.

16.4.3. Information

Function enables displaying additional information in the bottom line. Depending on the needs, you can choose the following options, which are shown while working in <**WEIGHING**> mode:

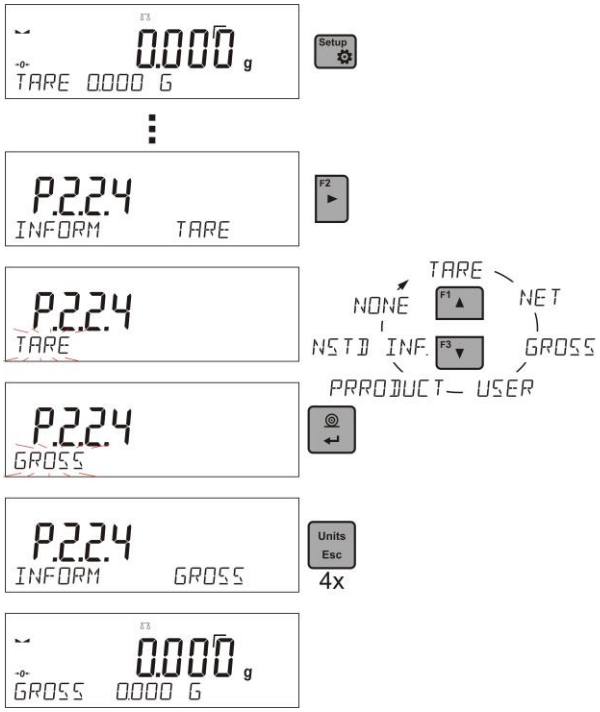

<BARGRAF> option presents amount of used weighing capacity in a graphic form, it covers 0 – MAX range.

Example of a display with bargraph option on: 500 g heavy load placed on a weighing pan means that 50% of max capacity has been used (half-filled bargraph bottom line).

16.4.4. Non-standard Information

Function enables declaring non-standard information, which is to be displayed in the bottom line of the display. You can insert any text consisting of 19 characters maximum.

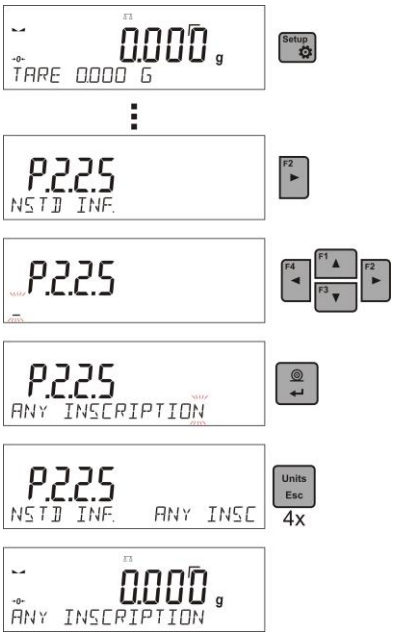

If you want the declared non-standard information to be visible, set parameter P2.1.2 to < NSTD. INF. > option.

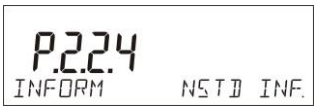

16.4.5. F Shortcut Keys

Function enables assigning quick access for weighing functions which are to be accessible by pressing F1, F2, F3 or F4 keys. You can choose between the following options for <WEIGHING> mode: <NONE / ENTER TARE / PRINT HEADER / PRINT FOOTER / VARIABLE 1 / VARIABLE 2>. These options can be freely assigned to any of the F keys. For other modes there are more available options (see further sections of this manual).

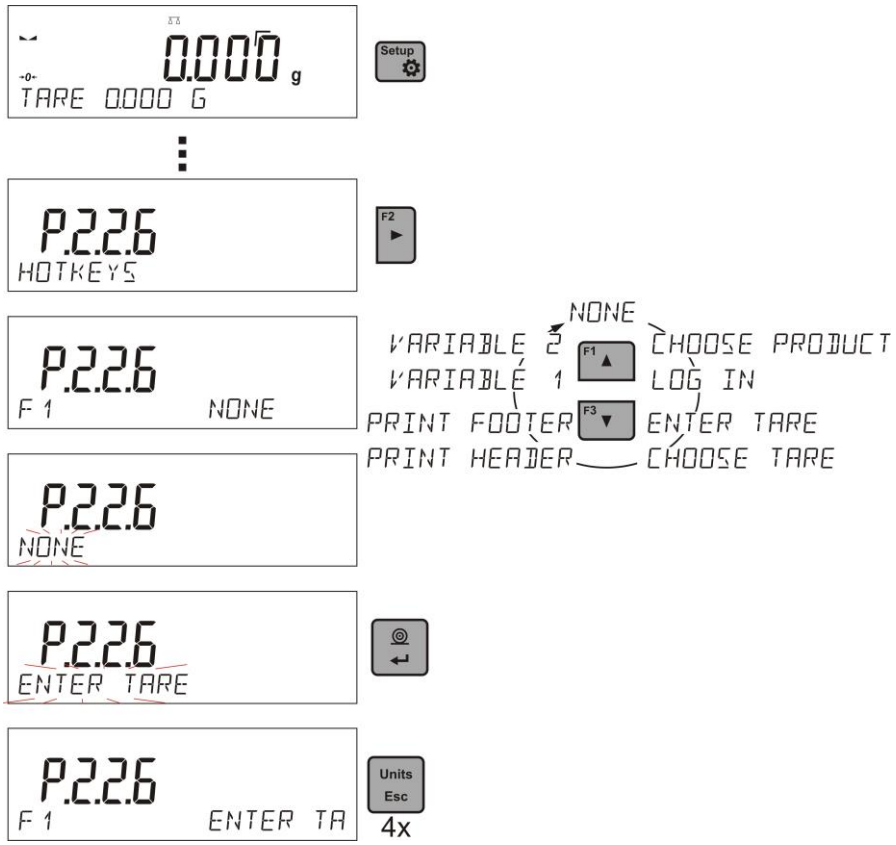

Functions for particular working modes:

Function	Modes featuring the function
SELECT PRODUCT	All modes
LOG IN	All modes
ENTER TARE	All modes
SELECT TARE	All modes
PRINT HEADER	All modes
PRINT FOOTER	All modes
VARIABLE 1	All modes

VARIABLE 2	All modes
PROFILES	All modes
ENTER SAMPLE	Parts Counting, Dosing, Percent Weighing
DETERMINE SAMPLE	Parts Counting, Percent Weighing
SET HI_LO	Checkweighing exclusively
START	Animal Weighing, Solids Density, Liquids Density, Pipettes Calibration
RESULT	Statistics exclusively
END	Statistics, Totalizing
DELETE LAST	Totalizing exclusively

17. DRYING PROCESS PERFORMED BY MEANS OF QUICK MENU

17.1.1. Additional Settings for Drying Mode

In addition to the standard settings for this mode (as described in the drying mode section of this user manual) following settings describing drying mode operation were implemented:

- **TEMP. UNIT –** parameter enables changing the unit of displayed temperature; options: [°C] or [°F]
- **AUTOTARE –** parameter enables switching on/off automatic taring of disposable weighing pan while starting the drying process.

Keep in mind to set the abovementioned parameters to values accordant with the needs and expectations resulting from ambient conditions.

F Shortcut Keys
Function enables declaring quick access options available on pressing F1, F2, F3 and F4 buttons.
For more information on how to declare the buttons go to section 15.4.5 of this user manual.

Current drying parameters are presented in a form of pictograms on the left side of the display. To change the parameters go to the drying process settings.

Go to drying process menu and set the following parameters:
- Drying process profile and parameters
- Automatic finish mode and its parameters
- Unit of displayed and printed result
- Printout interval during drying process

To change parameters settings enter drying process menu and press ‘Profiles’ button.

17.1. Drying Process Mode and Drying Parameters

Upon entering settings for drying parameters, the user shall see word <MODE> and a blinking word standing for mode type. Using arrow buttons select an appropriate mode and press ENTER button to confirm. Upon confirmation the program automatically proceeds to parameters settings.

Drying process mode parameter takes the following values:

- **STANDARD drying mode**

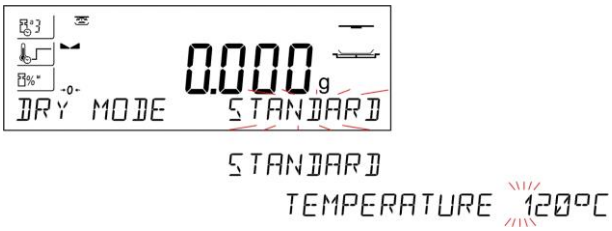

For standard mode, set drying temperature for which a sample is to be tested.

- **FAST drying mode**

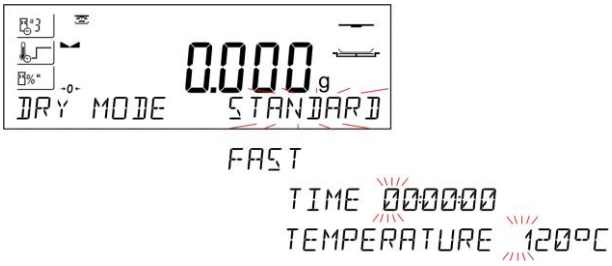

For quick mode, set both, length of time for heating in a temperature higher than the preset one and temperature for which a sample is to be tested.

Specific feature of this drying mode is fast increase of drying temperature in short period of time.
When compared to the preset temperature, the drying temperature rises 30% and it is maintained at this level for a specified amount of time, next it drops to temperature value preset in drying mode parameters.

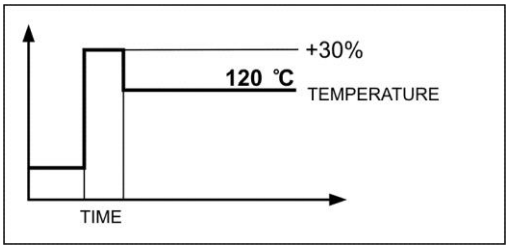

- **MILD drying mode**

For mild mode, set length of time within which moisture analyser is to reach specified temperature and temperature for which a sample is to be tested.

MILD
TIME 000000
TEMPERATURE 120°C

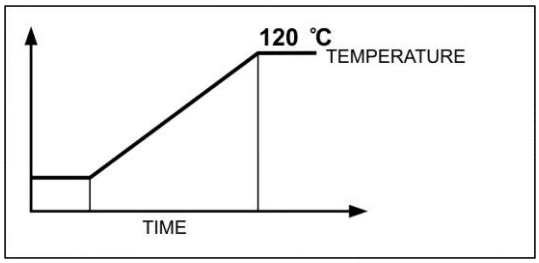

- **STEP drying mode**

For step mode, set length of time for heating in temperature number one, first step temperature, length of time for heating in temperature number two, second step temperature and temperature for which a sample is to be tested.

STEP
TIME 1 000000
TEMP 1 000°C
TIME 2 000000
TEMP 2 000°C
TEMPERATURE 120°C

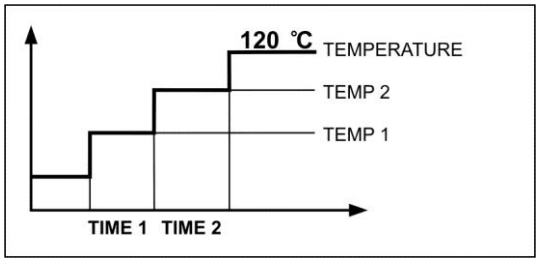

CAUTION:
*For **Step** mode, set step temperature „**1**" and „**2**" and temperature of drying, set also time length for heating in particular indirect temperatures (1 and 2). Time for heating in particular steps is counted from the moment of reaching a preset temperature for a particular step.*

17.2. Automatic Finish Mode

Automatic finish mode (Auto switch off mode) takes the following values:

a1 - auto switch-off (mass change of 1mg / within time length of 10s)
a2 - auto switch-off (mass change of 1mg / within time length of 25s)
a3 - auto switch-off (mass change of 1mg / within time length of 60s)
a4 - auto switch-off (mass change of 1mg / within time length of 90s)
a5 - auto switch-off (mass change of 1mg / within time length of 120s)

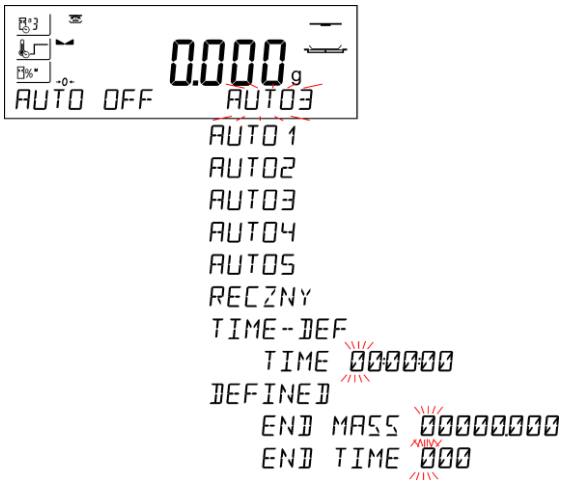

– Manual switch-off (on pressing **Start/Stop** button, maximum drying time is 99 hours and 59 minutes, when drying takes this long or longer the drying process is finished automatically)

– time-defined switch-off (maximum drying time is 99 hours 59 minutes)

a – defined switch-off (*change of mass comprised within the balance range, set with moisture analyser readability, time interval ranging from 1 to 120s)*

17.3. Unit of Displayed and Printed Measurement

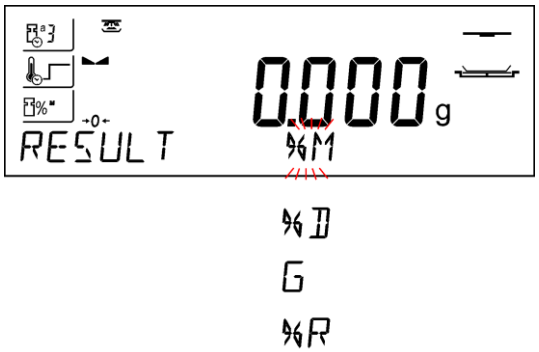

0/0 M percent loss of weight, displays weight change recorded during drying process expressed in percent,

0/0 D part of dry mass obtained during drying process, expressed in percent, measurement result is part of mass that is remaining on a drying pan after humidity content evaporation,

0/0 R humid / dry ratio obtained as a result of drying process, expressed in percent, measurement result is part of mass that evaporated from the dried sample during drying process,

G mass change , measurement result is mass change recorded during drying process,

17.4. Measurement Printout Interval

Time interval between successive printouts of measurements, wherein the printouts are performed in the course of a drying process. The time interval is expressed in seconds, value range: 0 – 120 s.

18. DRYING PROCESS PERFORMED WITH USE OF DRYING PROGRAM LIBRARY

Moisture analyser can record up to 100 drying programs. The programs may be freely configured, recorded and used.

In order to use a particular program for a drying process, do the following:
1. Record procedure to moisture analyser memory (read instruction in section 10.3. Drying programs).
2. Select the recorded program prior drying. Drying parameters shall be updated to parameters recorded for the selected drying program.

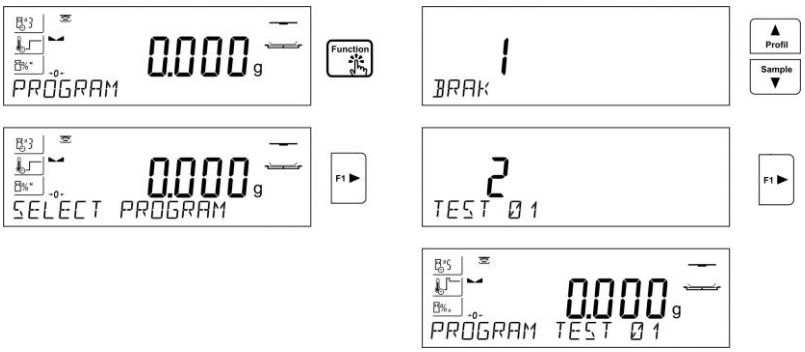

or

3. Enter data relating to a product/sample that is to be dried, edit product data and set the recorded program as a drying program (read instruction in section 14.2. Products)
4. Prior dying, select the entered product as a current one. Drying parameters shall be updated to parameters recorded for the drying program that is assigned to a selected product.

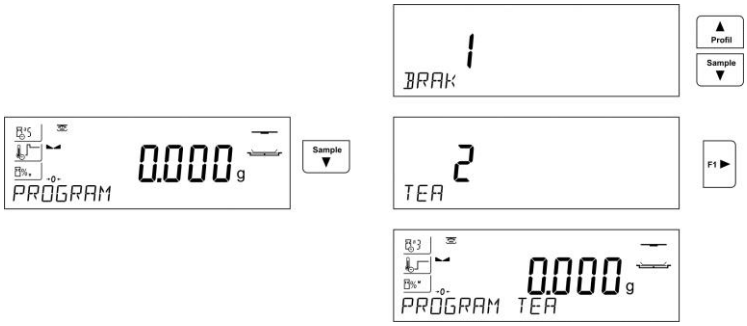

19. DRYING PROCESS

The drying result is calculated according to the following formulas:

Moisture content: $\%M = (m_1-m_2)/m_1*100\%$

Dry matter content: $\%D = (m_2/m_1)*100\%$

$\%R = (m_1-m_2)/m_2*100\%$

Where: m_1 – wet sample weight
m_2 – dry sample weight

Current drying process settings are displayed in a form of pictograms on the left.

Press Start/Stop button in order to run the drying process.
Prompts and messages are displayed making moisture analyser operation easier. Follow the prompts to correctly prepare the sample and to perform the process of humidity content determination for a tested sample.

Caution:
If AUTOTARE option is enabled remember to put disposable weighing pan on the cross-shaped holder before starting the drying process. Weighing pan mass is automatically tared and <Prepare sample> message is displayed.

Program prompts you to prepare a weighing pan, upper top pictogram blinks.

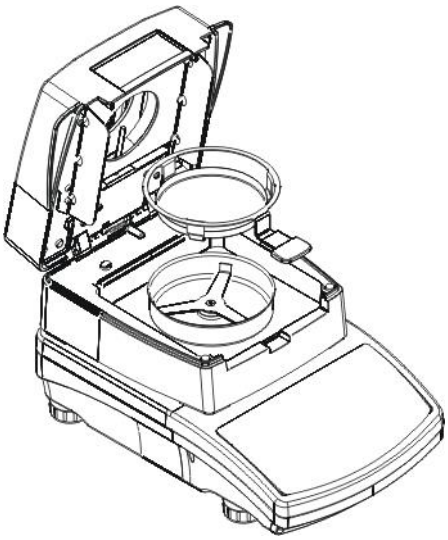

Place the disposable weighing pan in a pan handle and deposit it on a bracket. The display shows disposable pan weight.

It is recommended to close the drying chamber in order to provide stable ambient conditions while taring.

Using ZERO button, zero the weighing pan weight.

Indication equals ZERO, subsequent prompt is displayed, blinking pictogram swaps to a different one.

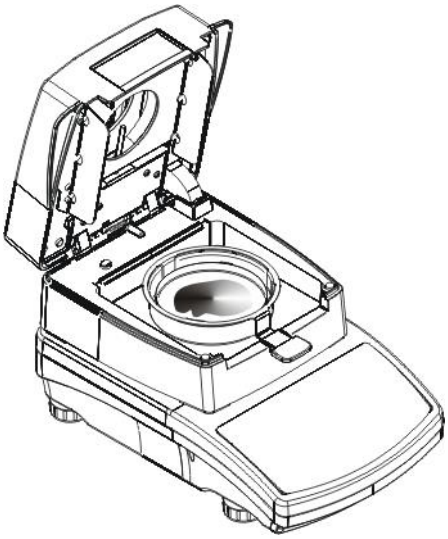

Deposit sample on a weighing pan.
Sample weight shall be selected on the basis of prior experience and tested material characteristics.

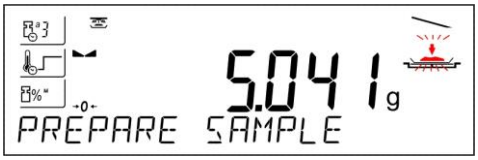

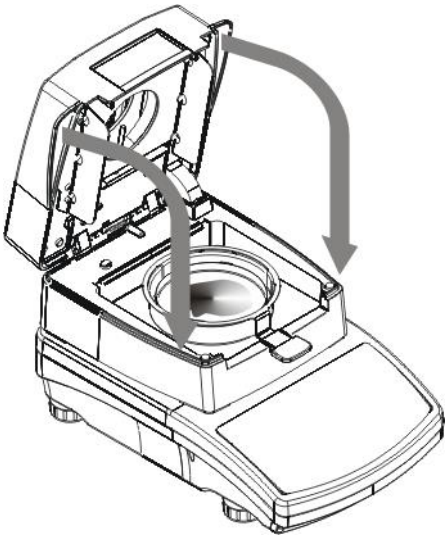

In the course of sample preparation (mass on a weighing pan starts to change) blinking pictogram swaps to a different one. Upon preparing the sample and upon result stabilization (stability pictogram on a display) close the drying chamber for the drying process to start automatically.

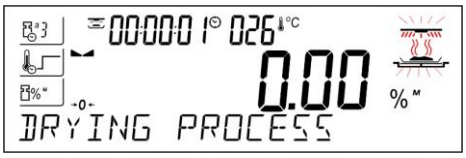

Information on the drying process is displayed, moisture analyser proceeds to carrying it out accordingly to set parameters. Required mass measurements and calculations of tested sample moisture content are performed, wherein the calculations are a result of mass change. On process start,

printout header is sent to a selected interface (accordingly to set printout options – parameter group P5.5 DRYING PROCESS REPORT).

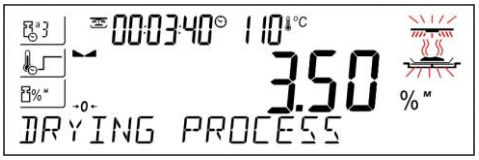

In course of a drying process current weight results and information on the process is displayed (test duration, drying chamber temperature, etc.).
In course of a drying process (accordingly to set printout options – parameter group P5.5 DRYING PROCESS REPORT), measurements are sent to a selected communication port in a preset time intervals (INTERVAL).

UNITS button allows the user to swap between displayed result type.

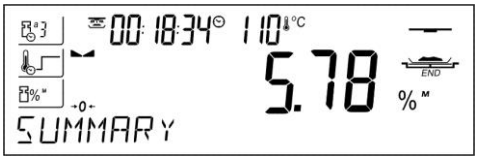

Upon drying process completion, summary of the test is displayed, final humidity result is held.
Printout footer is sent to a selected interface (accordingly to set printout options – parameter group P5.5 DRYING PROCESS REPORT).

Drying process may be aborted at any time. In order to abort the process, press **Start/Stop** button and confirm completion by pressing **Print/Enter** button.

Manual auto switch-off mode is an exception to the rule – for moisture analyser working in this mode, the drying process ends upon pressing **Start/Stop** button, there is no need to confirm completion by pressing **Print/Enter** button.

In order to return to the main screen of drying process settings, open a drying chamber. Moisture analyser returns to its initial state, completed process summary is blanked. The moisture analyser is ready to perform another test.

20. COMMUNICATION

Communication menu enables configuration of port settings. The settings are accessed upon pressing

button.
Communication with peripheral devices is established via the following ports:

- COM 1 (RS232),
- USB type A
- USB type B
- WIFI,

Parameters of USB ports are not configurable. Type B is designed to connect a computer, and type A is designed to connect a computer keyboard, a bar code reader or the flash drive.

20.1. RS 232 Ports Settings (COM)

Procedure:

- Select communication port <COM 1>,
- Set respective values

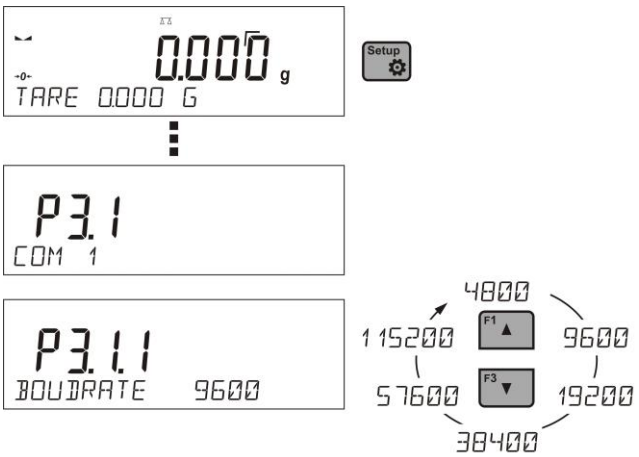

The RS 232 ports enable the following setting of transmission parameters:

- Baud rate – 2400, 4800, 9600, 19200, 38400, 57600, 115200 bit/s
- Parity – NONE, ODD, EVEN

20.2. WIFI Port Settings

CAUTION!

- *The transmission parameters must be matched to the customer's local network.*
- *To ensure proper communication with a computer via Wi-Fi port, set the computer port parameter on your balance to <WIFI>: P4.1.1 <DEVICES/COMPUTER/PORT/WIFI>.*

Parameters for Wi-Fi connection:

P3.3.1 – STATUS
P3.3.2 – WIFI
P3.3.3 – CHOOSE NETWORK
P3.3.4 – NETWORK SETTING
  P3.3.3.1 – DHCP
  P3.3.3.2 – NAME (the name of the network that has been selected)
  P3.3.3.3 – PASSWORD (password – 'stars' are displayed)
  P3.3.3.4 – IP (balance ID number, make sure that the number is not engaged by a different device using this network)
  P3.3.3.5 – MASK (default 255.255.000.000)
  P3.3.3.6 – GATE (default 10.10.8.244)
  P3.3.3.7 – MAC ADDRESS (0008DC…)

After entering the parameter, message <STATUS> and value describing the connection status for Wi-Fi network appear in the bottom line.

- **CONNECT** – the balance is connected to one of the available Wi-Fi networks, additionally, at the top pictogram turns up and stays visible as long as network connection is active.
- **CONNECTIVITY** – the balance is trying to re-establish connection with the previously connected network, suitable for previously entered settings (network, IP, etc.)

- **NONE** – Wi-Fi module is not installed or it is disabled (parameter P3.2.2 WIFI set to NO value).

Procedure:

- Switch <WIFI> module on – parameter P3.3.2 <COMMUNICATION/WIFI – YES>.
- Set respective value for DHCP parameter P3.3.4.1 <COMMUNICATION/WIFI/NETWORK SETTINGS/DHCP>:
  NO - manual entering of data such as: <IP; MASK, DEFAULT GATE>,
  YES - the balance software automatically reads and displays data assigned by Wi-Fi Router, the one to which the balance is to be connected.
- Now enter parameter <P3.3.3 – SELECT NETWORK> and start the procedure of searching for available networks by pressing [F2 ▶] button. Search procedure starts and after its completion the first network detected by the balance appears in the bottom line.
- Use [F1 ▲] or [F3 ▼] buttons to select the demanded network and press [◎ ↵] button.
- Message <PASSWORD********> appears in the bottom line. Use a computer keyboard connected to USB port to easily enter the case-sensitive password (using balance keyboard you can enter only upper-case letters and digits). Enter the network password and confirm it by pressing [◎ ↵] button.
- Upon entering a respective password the balance automatically connects to the selected network.
- Go to the parameter <P3.3.1 – STATUS>, message <CONNECTIVITY> is displayed meaning that the balance is trying to connect to the network using the settings.
- When the balance connects to Wi-Fi network, the status changes to <CONNECT>, pictogram is displayed.
- If the balance cannot connect to the network for a long time (<CONNECTIVITY> status displayed), it is likely that network parameters have been incorrectly entered.
- Ensure that the settings are correctly entered, and repeat the connecting process.
- If this fails, contact your RADWAG service representative.

Selected network and parameters settings are stored by the balance memory, each time when the balance is launched the software connects to the network referring to the set parameters.

To disconnect the network, switch the communication off:
COMMUNICATION/WIFI/WIFI – NO

20.3. USB Port

USB1 port type A is intended for:

- Connecting a flash drive storing <**FAT files system**>,
- Connecting balance to PCL printer,
- Connecting EPSON TM-T20 printer to USB port

Flash drive may be used for export/import of data stored in balances, or for carrying out measurement data printout (set parameter P4.2.1 <DEVICES/PRINTER/PORT> to <PENDRIVE> value). Measurement data printout operation is described in section 11.3 of this manual.
Please remember that for PCL printer the drivers print completely filled page, i.e. the page will be printed only upon pressing PRINT button, located on a balance, for several times (it

depends on a printout size how many times the PRINT button shall be pressed prior printout).
It is possible to obtain printout upon pressing PRINT button once only, supposing that control code <0C> has been set as SUFIX (*for description of this function go to section 20.2 Printer*).

USB port of type B is intended for:

- Connecting balance to a PC computer

In order to make connection of balance and computer possible, it is necessary to install virtual COM port in a computer.
To carry out this procedure, you need a respective driver installer which may be either downloaded from www.radwag.com website or taken from a CD with manuals: *R X2 SERIES RADWAG USB DRIVER x.x.x.exe*.

Steps:

1. Run driver installer

   Startup dialog window:

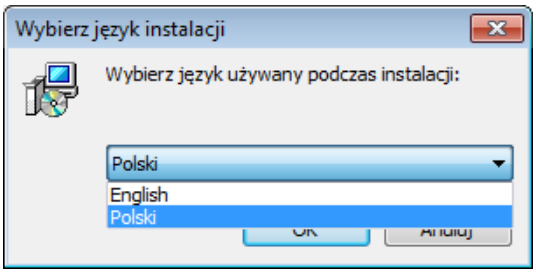

Select language version.

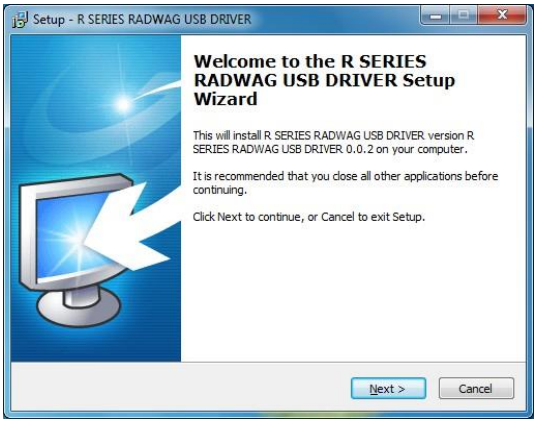

In order to continue, press „**Next**" button.

Window for target folder selection:

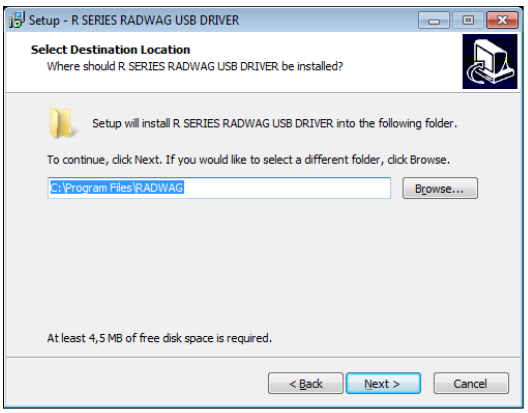

Select a respective folder and click **„Next"** key to proceed.

"Ready to Install" window:

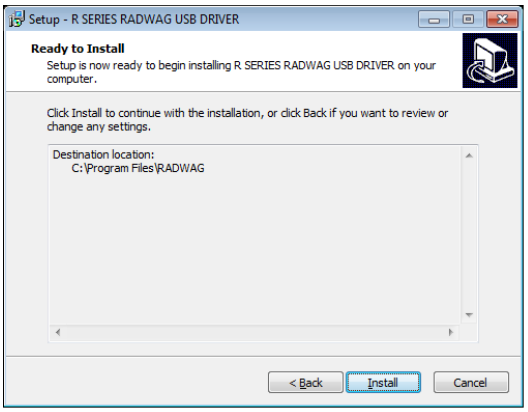

In order to run installation process, press „**Install**" key and clicking respective keys, follow the install wizard.

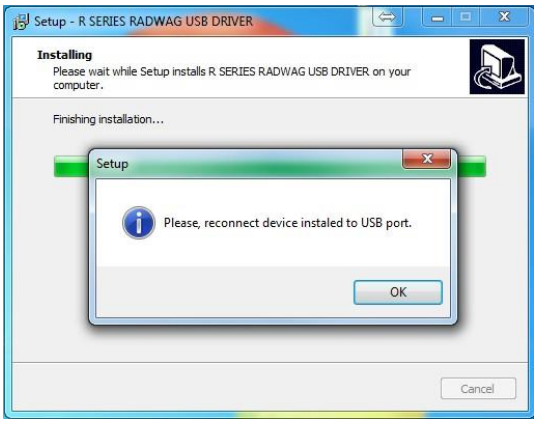

2.

Having completed driver installation, connect balance to a computer, use 1,8-meter long USB A/B cable maximally (in case of already connected balance, it is necessary to disconnect it and using USB cable connect the balance again).

3. The system detects the new USB device and automatically starts searching a respective driver

4. 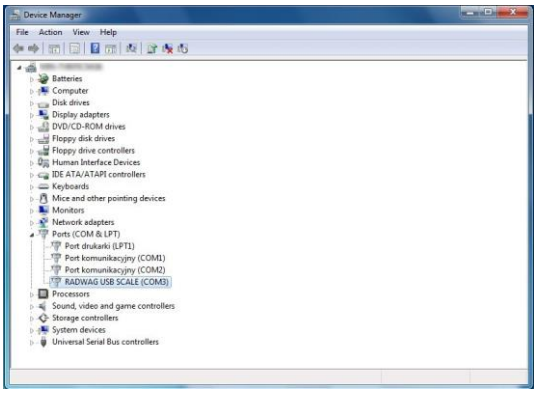

   Go to Device Manager and check number assigned to virtual COM port.

   For this very case it is STMicroelectronics Virtual COM Port (COM8).

5. Set balance parameters: select USB value for parameter COMPUTER/PORT.
6. Run software for measurement readout.
7. Use the program to set parameters for communication – select respective COM port (for the very case it is COM8), i.e. the one which has been formed while installing drivers.
8. Start cooperation.

21. PERIPHERAL DEVICES

PERIPHERAL DEVICES menu is comprised within Parameters menu. It is accessed by pressing Setup key. The menu features list of devices that can cooperate with the balance.

21.1. Computer

<COMPUTER> submenu allows the user to select a port for connection of a computer running software which enables:

- communication with a balance,
- switching the continuous transmission on and off, and
- cooperation of a balance with E2R software of Radwag production.

21.1.1. Computer Connection Port

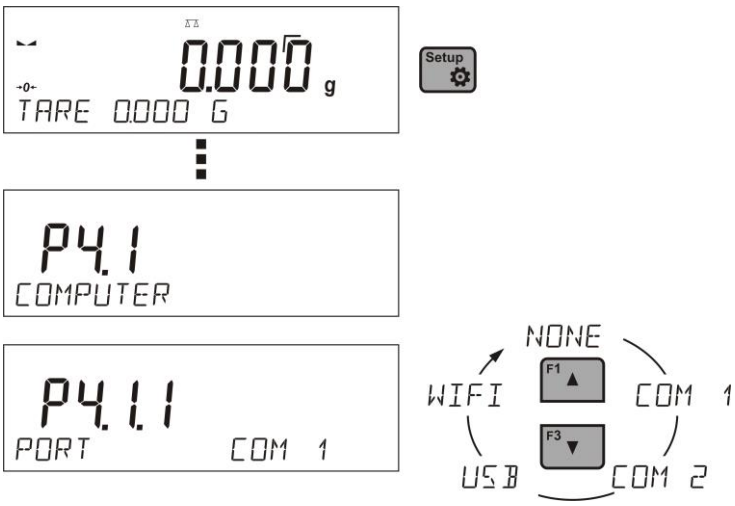

Procedure:

- press Setup button
- enter <P4 DEVICES> menu
- enter menu group: <P4.1 COMPUTER>
- select port to which a computer is to be connected,

  COM 1 – RS 232 port, to which the computer is connected
  USB 2 type B – USB port, to which the computer is connected
  WIFI – WIFI port

21.1.2. Continuous Transmission

Continuous transmission parameter enables turning on/off continuous transmission of a measurement result.
Available options:

- Continuous transmission in a calibration unit <CAL. UNIT>, independently from currently chosen weight unit, measurements are transmitted in unit set on a main measuring device (calibration unit)
- Continuous transmission in a current unit <CURRENT UNIT> measurements are transmitted in a current unit; the unit changes dynamically whenever the user presses Units button in order to modify the unit on a display.
- Continuous transmission off <NONE>

Procedure:

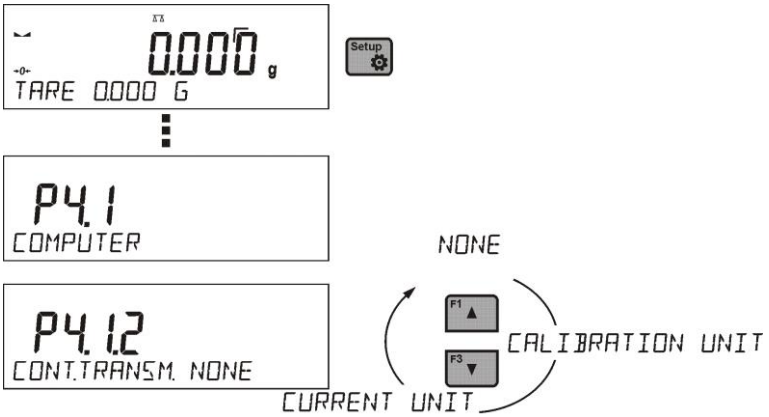

CAUTION!
Continuous transmission may be turned on/off by means of a command sent from a computer (go to COMMUNICATION PROTOCOL section).

21.1.3. Printouts Interval for Continuous Transmission

Parameter <P4.1.3. INTERVAL> enables setting frequency of printouts for continuous transmission.
Frequency of printouts is set in seconds, wherein the accuracy is 0.1s.
The user may set any time value ranging from 1000 to 0.1 s.
The setting is valid for continuous transmission in calibration unit and in current unit activated by means of the balance (see parameter P4.2.1.2), it is also valid for continuous transmission activated by command sent from a computer (see point 22 COMMUNICATION PROTOCOL).

21.2. Printer

Submenu <PRINTER> allows you to choose a port and a device, to which the data is to be sent upon pressing button on a balance. Content of data being transferred is set in parameter <PRINTOUTS/PRINTOUT GLP>.

Procedure:

- press Setup button
- enter <P4 DEVICES> menu
- enter menu group: <P4.2 PRINTER>
- select port to which the printer is to be connected:

  COM 1 – RS 232 port, to which the printer is connected
  USB 1 type A – USB port, to which PCL printer or EPSON printer is connected
  WIFI – WIFI port, which can send data to special software manufactured by RADWAG e.g. PW-WIN measurement, run by means of the computer connected to the balance via WIFI.
  PENDRIVE – USB port type A, to which external memory flash drive is connected
  USB PC –USB port type B, to which the computer with the special software by RADWAG is connected e.g. PW-WIN measurement.

Example of the measurement printout is described in the PRINTOUTS section.

Additionally you can enter a controlling code (of a hexadecimal form) to a printer either at the beginning of the printout - <P4.2.2 PREFIX> or at the end of it - <P4.2.3 SUFFIX>. Sending these codes allows to control globally information or actions carried out at the beginning and/or at the end of each printout sent from a balance to a printer.
This function is most frequently used to send an information about the code page of a printout sent by a balance, at the beginning, and to send a command enabling the crop of a paper in EPSON printers (if the printer is equipped with an autocutter blade), at the end.
<PREFIX> and <SUFFIX> parameters settings are available for all the printouts sent from balance, e.g. calibration reports, density, statistics etc., and for the header, footer and GLP printouts.

CAUTION:
It must be remembered that inserting paper crop command to <SUFFIX> parameter (control code) results in sending the code after each printout. If the user wishes for one whole printout to consist of: HEADER, GLP PRINTOUT and FOOTER and to be cropped underneath the FOOTER, then the paper crop command should be inserted only for FOOTER settings as a non-standard printout with <%E> value (paper crop for EPSON printer). In such a case <SUFFIX> command must remain empty.

To ensure correct cooperation of the balance with the printer (correct printout of diacritical signs of a given language), respective baud rate obligatory for a given printer must be chosen (see the printer settings). Additionally code page of a sent printout must be accordant with a code page of a printer.

Accordance of a code page may be obtained in two ways:

- setting the right code page in the settings of a printer (see a user manual of the printer) – it must be accordant with the printout code page of a balance (**1250** code page for POLISH, CZECH, HUNGARIAN; **1252** for ENGLISH, GERMAN, SPANISH, FRENCH, ITALIAN; **1254** for TURKISH),

- sending the control code from the balance, which automatically sets the right code page of the printer (code page accordant with the one of a balance) prior to printout of data taken from the balance (this possibility is available only for printers with such option – see a user manual of the printer).

CAUTION! CODES MUST BE ENTERED IN A HEXADECIMAL FORM!

Example balance settings for correct cooperation with **TM-U220B** EPSON matrix printer connected to RS232 port (since this printer features only 852 code page, there won't be any Polish signs on a printout):

Communication parameters for port to which the printer is connected:
- BAUD RATE - 9600 bit-s
- PARITY – none

Printer parameters for a PERIPHERALS group:
- PORT – COM1
- PREFIX - ***1B742D*** (**1250** code page)
- SUFFIX - ***1D564108*** (paper crop for EPSON printers equipped with an auto cutter blade)

Example balance settings for correct cooperation (printout of Polish signs) with **TM-T20** EPSON thermal printer connected to RS232 port; if the printer is connected to USB port than the baud rate settings and parity do not matter.

Communication parameters of port to which the printer is connected:
- BAUD RATE - 38400 bit-s
- PARITY – none

Printer parameters for a PERIPHERALS group:
- PORT – COM
- PREFIX - ***1B742D*** (**1250** code page)
- SUFFIX - ***1D564108*** (paper crop for EPSON printers equipped with an auto cutter blade)

If on the printout in the place of the last digit there are any unexpected signs (for verified balances), than <P4.2.2 PREFIX> parameter should incorporate, apart from code page, code of the UK signs chart: **1B5203**. In such a case the <P4.2.2 PREFIX> parameter setting should be as follows:
- PREFIX - ***1B742D*** (1250 code page and UK signs chart)

Control codes for exemplary code pages:

Control code	Page or other command
1B742D	code page 1250
1B7410	code page 1252
1B7430	code page 1254
1B5203	UK signs chart
1B5202	DE signs chart
1D564108	Paper crop
0C	Form feed (for PCL printers)

21.3. Barcode Reader

Submenu <BARCODE READER> comprises settings for cooperation with a barcode reader.

Procedure:

- press Setup button
- enter <P4 DEVICES> menu
- enter menu group <P4.3 BARCODE READER>
- select port to which the barcode reader is to be connected: NONE, COM 1, COM 2

22. COOPERATION WITH PERIPHERALS

CAUTION!
A peripheral device that is connected to RS 232 or USB port of a balance, has to be powered from the common low voltage grid equipped with common anti-shock protection in order to provide that possible occurrence of different potentials in zero cables of the peripheral device and the balance is precluded.

Balance transmission parameters must correspond to the parameters of a device that is connected to the balance.

- Baud rate - 4800 ÷ 115200 bit / s
- Parity control - NONE, ODD, EVEN

Value indicated on a display can be sent via RS232 or USB port to a peripheral device in one of four accessible ways:

- manually - on pressing button
- automatically - on stabilisation of a weighing result
- continuously - on activation of a function or sending a command
- on command sent from a peripheral device (see additional functions).

Value indicated on a display can be sent via COM port or USB port in the following form:

- stable – data is sent immediately on stabilisation of weighing result (button)
- unstable – on pressing button, display status is sent immediately to a peripheral device (on a printout such status is marked with <?> symbol located in front of the weighing result).

Transferred Data Format

The measurement result can be transferred from a balance to an external device by pressing button, located on the balance, or by sending a control command from a computer.

Format of Data Sent on Pressing Print Button

CAUTION!
Unstable measurement printout is disabled for a verified balance.

Printout format:

1	2	3	4 - 12	13	14 - 16	17	18
stability marker	space	character	mass	space	unit	CR	LF

stability marker	[space] if stable [?] if unstable [^] if high limit is out of range [v] if low limit is out of range
character	[space] for positive values [-] for negative values
mass	9 characters, right justification
unit	3 characters, left justification

22.1.1. Response Format

On receipt of a command, the balance responds as follows.

- first:

XX_A CR LF	command understood and in progress
XX_I CR LF	command understood but not accessible at this moment
XX _ ^ CR LF	command understood but max threshold is exceeded
XX _ v CR LF	command understood but min threshold is exceeded
XX _ E CR LF	time limit exceeded while waiting for stable measurement result (time limit is balance characteristic parameter)

Where XX stands for command name.

- next:

1 – 3	4	5	6	7	8 – 16	17	18 - 20	21	22
command	space	stability marker	space	character	mass	space	unit	CR	LF

Command	1-3 characters
Stability marker	[space] if stable [?] if unstable [^] if high limit is out of range [v] if low limit is out of range
Character	[space] for positive values [-] for negative values
Mass	9 characters, right justification
Unit	3 characters, left justification

23. COMMUNICATION PROTOCOL

General information

A. A character based communication protocol balance-terminal is designed for establishing communication between a RADWAG balance and a peripheral device via RS-232C serial interface.

B. It consists of commands sent from a peripheral device to the balance and responses from the balance.

C. Responses are sent from the balance on each receipt of a command as a reaction to a specific command.

D. Commands, forming the communication protocol, enable both, obtaining data on balance status and influencing balance operation, e.g.: acquiring measurement results from the balance, zeroing, etc.

23.1. List of Commands

Command	Command overview
Z	Zero balance
T	Tare balance
OT	Give tare value
UT	Set tare
S	Send stable measurement result in basic measuring unit
SI	Immediately send measurement result in basic measuring unit
SU	Send stable measurement result in current measuring unit
SUI	Immediately send measurement result in current measuring unit
C1	Switch on continuous transmission in basic measuring unit
C0	Switch off continuous transmission in basic measuring unit
CU1	Switch on continuous transmission in current measuring unit
CU0	Switch off continuous transmission in current measuring unit
DH	Set min checkweighing threshold
UH	Set max checkweighing threshold
ODH	Give value of min checkweighing threshold
OUH	Give value of max checkweighing threshold
SM	Set mass value of a single item
TV	Set target mass value
RM	Set reference mass value
NB	Give balance serial number
SS	Value release
IC	Internal adjustment performance
IC1	Disable automatic internal adjustment of the balance
IC0	Enable automatic internal adjustment of the balance
K1	Lock balance keypad
K0	Unlock balance keypad
OMI	Give available working modes
OMS	Set working mode
OMG	Give current working mode
UI	Give accessible units

AKRIBIS · www.akribis.info · contacto@akribis.info

US	Set unit
UG	Give current unit
BP	Activate sound signal
PC	Send all implemented commands
BN	Give balance type
FS	Give Max capacity
RV	Give program version
A	Set autozero function
EV	Set ambient conditions state
EVG	Give set ambient conditions state
FIS	Set filter
FIG	Give current filter setting
ARS	Set value release
ARG	Give current value release setting
LDS	Set last digit
PROFILE	Profile selection
PRG	Give set profile name

CAUTION!
Each command must end with CR LF characters;

23.2. Response Format

On receipt of a command, the terminal sends a response in one of the following formats:

XX_A CR LF	command understood and in progress
XX_D CR LF	command carried out (appears only after the command XX_A)
XX_I CR LF	command understood but not accessible at this moment
XX _ ^ CR LF	command understood but max threshold is exceeded
XX _ v CR LF	command understood but min threshold is exceeded
XX _ OK CR LF	command carried out
ES_CR LF	command not recognised
XX _ E CR LF	time limit exceeded while waiting for a stable measurement result (time limit is balance characteristic parameter)

XX - stands for a name of a sent command
_ - stands for spaces

COMMANDS OVERVIEW

Zero balance

Format: **Z CR LF**

Response options:

Z_A CR LF	- command understood and in progress
Z_D CR LF	- command carried out
Z_A CR LF	- command understood and in progress
Z_^ CR LF	- command understood but zeroing range is exceeded
Z_A CR LF	- command understood and in progress
Z_E CR LF	- time limit exceeded while waiting for stable measurement result
Z_I CR LF	- command understood but not accessible at this moment

Tare balance

Format: **T CR LF**

Response options:

T_A CR LF	- command understood and in progress
T_D CR LF	- command carried out
T_A CR LF	- command understood and in progress
T_v CR LF	- command understood but taring range is exceeded
T_A CR LF	- command understood and in progress
T_E CR LF	- time limit exceeded while waiting for stable measurement result
T_I CR LF	- command understood but not accessible at this moment

Give tare value

Format: **OT CR LF**

Response: **OT_TARE CR LF** - command carried out

Response format:

1	2	3	4-12	13	14	15	16	17	18	19
O	T	space	Tare	space	unit			space	CR	LF

Tare - 9 characters, right justification

Unit - 3 characters, left justification

Caution:

Tare value is always given in adjustment unit.

Set Tare

Format: **UT_TARE CR LF**, where **TARE** - tare value.

Response options:

UT_OK CR LF	- command carried out
UT_I CR LF	- command understood but not accessible at this moment
ES CR LF	- command not recognised (tare format incorrect)

Caution:

Use dot in tare format as decimal point.

Send stable measurement result in basic measuring unit

Format: **S CR LF**

Response options:

S_A CR LF	- command understood and in progress
S_E CR LF	- time limit exceeded while waiting for stable measurement result
S_I CR LF	- command understood but not accessible at this moment
MASS FRAME	- command carried out, immediate response: mass value in basic measuring unit

Response format:

1	2-3	4	5	6	7-15	16	17	18	19	20	21
S	space	stability marker	space	character	mass	space	unit			CR	LF

Example:

S CR LF - command sent from a computer

S _ A CR LF - command understood and in progress

S _ _ _ _ - _ _ _ _ _ _ 8 . 5 _ g _ _ CR LF - command carried out, immediate response: mass value in current measuring unit.

where: _ - space

Immediately send measurement result in basic measuring unit

Format: **SI CR LF**

Response options:

SI_I CR LF - command understood but not accessible at this moment

MASS FRAME - immediate response: mass value in basic measuring unit

Response format:

1	2	3	4	5	6	7-15	16	17	18	19	20	21
S	I	space	stability marker	space	character	mass	space	unit			CR	LF

Example:

S I CR LF - command sent from a computer

S I _ ? _ _ _ _ _ _ _ 1 8 . 5 _ k g _ CR LF - command carried out, immediate response: mass value in basic measuring unit

where: _ - space

Send stable measurement result in current measuring unit

Format: **SU CR LF**

Response options:

SU_A CR LF - command understood and in progress

SU_E CR LF - time limit exceeded while waiting for stable measurement result

SU_I CR LF - command understood but not accessible at this moment

MASS FRAME - command carried out, immediate response: mass value in basic measuring unit

Response format:

1	2	3	4	5	6	7-15	16	17	18	19	20	21
S	U	space	stability marker	space	character	mass	space	unit			CR	LF

Example:

S U CR LF - command sent from a computer

S U _ A CR LF - command understood and in progress

S U _ _ _ - _ _ 1 7 2 . 1 3 5 _ N _ _ CR LF - command carried out, response: mass value in current measuring unit.

where: _ - space

Immediately send measurement result in current measuring unit

Format: **SUI CR LF**

Response options:

SUI_I CR LF - command understood but not accessible at this moment

MASS FRAME - immediate response: mass value in basic measuring unit

Response format:

1	2	3	4	5	6	7-15	16	17	18	19	20	21
S	U	I	stability marker	space	character	mass	space	unit			CR	LF

Example:

S U I CR LF - command sent from a computer

S U I ? _ - _ _ _ 5 8 . 2 3 7 _ k g _ CR LF - command carried out, immediate response: mass value in current measuring unit.

where: _ - space

Switch on continuous transmission in basic measuring unit

Format: **C1 CR LF**

Response options:

C1_I CR LF - command understood but not accessible at this moment

C1_A CR LF - command understood and in progress

MASS FRAME - command carried out, immediate response: mass value in basic measuring unit

Response format:

1	2	3	4	5	6	7-15	16	17	18	19	20	21
S	I	space	stability marker	space	character	mass	space	unit			CR	LF

Switch off continuous transmission in basic measuring unit

Format: **C0 CR LF**

Response options:

C0_I CR LF - command understood but not accessible at this moment

C0_A CR LF - command understood and carried out

Switch on continuous transmission in current measuring unit

Format: **CU1 CR LF**

Response options:

CU1_I CR LF - command understood but not accessible at this moment

CU1_A CR LF - command understood and in progress

MASS FRAME - response: mass value in current measuring unit

Response format:

1	2	3	4	5	6	7-15	16	17	18	19	20	21
S	U	I	stability marker	space	character	mass	space	unit			CR	LF

Switch off continuous transmission in current measuring unit

Format: **CU0 CR LF**

Response options:

CU0_I CR LF - command understood but not accessible at this moment

CU0_A CR LF - command understood and carried out

Set min checkweighing threshold

Format: **DH_XXXXX CR LF**, where: _ - space**, XXXXX** - mass format

Response options:

DH_OK CR LF - command carried out

ES CR LF - command not recognised (mass format incorrect)

Set max checkweighing threshold

Format: **UH_XXXXX CR LF**, where: _ - space**, XXXXX** - mass format

Response options:

UH_OK CR LF - command carried out

ES CR LF - command not recognised (mass format incorrect)

Give value of min checkweighing threshold

Format: **ODH CR LF**

Response: **DH_MASA CR LF** - command carried out

Response format:

1	2	3	4-12	13	14	15	16	17	18	19
D	H	space	mass	space	unit			space	CR	LF

Mass - 9 characters, right justification

Unit - 3 characters, left justification

Give value of max checkweighing threshold

Format: **OUH CR LF**

Response: **UH_MASA CR LF** - command carried out

Response format:

1	2	3	4-12	13	14	15	16	17	18	19
U	H	space	mass	space	unit			space	CR	LF

Mass - 9 characters, right justification

Unit - 3 characters, left justification

Set mass value of a single item (for PARTS COUNTING mode)

Format: **SM_XXXXX CR LF**, where: _ **-** space**, XXXXX** - mass format

Response options:

SM_OK CR LF - command carried out

SM_I CR LF - command understood but not accessible at this moment (e.g. mode other than PARTS COUNTING)

ES CR LF - command not recognised (mass format incorrect)

Set target mass value (e.g. DOSING mode)

Format: **TV_XXXXX CR LF**, where: _ - space**, XXXXX** - mass format

Response options:

TV_OK CR LF	- command carried out
TV_I CR LF	- command understood but not accessible at this moment (e.g. mode other than DOSING)
ES CR LF	- command not recognised (mass format incorrect)

Set reference mass value (e.g. for DEVIATIONS)

Format: **RM_XXXXX CR LF**, where: _ - space**, XXXXX** - mass format

Response options:

RM_OK CR LF	- command carried out
RM_I CR LF	- command understood but not accessible at this moment (e.g. mode other than PERCENT WEIGHING)
ES CR LF	- command not recognised (mass format incorrect)

Value release

Format: **SS CR LF**

Response options:

SS_OK CR LF	- command understood and in progress

Command's function is similar to function of PRINT key located on the instrument panel.

Internal adjustment

Format: **IC CR LF**

Response options:

IC_A CR LF	- command understood and in progress
IC_D CR LF	- adjustment completed
IC_A CR LF	- command understood and in progress
IC_E CR LF	- time limit exceeded while waiting for stable measurement result
IC_I CR LF	- command understood but not accessible at this moment

Disable automatic internal adjustment of the balance

Format: **IC1 CR LF**

Response options:

IC1_I CR LF	- command understood but not accessible at this moment
IC1_E CR LF	- operation not possible, e.g. in case of verified balance
IC1_OK CR LF	- command carried out

Operation not possible for verified balances.
For non-verified balances the command inhibits internal calibration until it is enabled via IC0 command or until the balance is turned off. The command does not modify settings specifying calibration start.

Enable automatic internal adjustment of the balance

Format: **IC0 CR LF**

Response options:

IC0_I CR LF	- command understood but not accessible at this moment
IC0_OK CR LF	- command carried out

Operation not possible for verified balances.

Give balance serial number

Format: **NB CR LF**

Response options:

NB_A_”x” CR LF - command understood, response: serial number

NB_I CR LF - command understood but not accessible at this moment

x – serial number of the device (inserted in between inverted commas)

Example:

Command: NB CR LF - return serial number

Response: NB_A_”1234567” - weighing device serial number –-”1234567”

Lock balance keypad

Format: **K1 CR LF**

Response options:

K1_I CR LF - command understood but not accessible at this moment

K1_OK CR LF - command carried out

Command locks the balance keypad (proximity sensors, touch panel) until the moment of turning the balance off or until sending K0 command.

Unlock balance keypad

Format: **K0 CR LF**

Response options:

K0_I CR LF - command understood but not accessible at this moment

K0_OK CR LF - command carried out

Give available working modes

Command overview:

Command returns accessible working modes.

Format: **OMI <CR><LF>**

Response options:

OMI <CR><LF>
n_”Mode name” <CR><LF>: - command carried out, response: accessible working modes
n_”Mode name” <CR><LF>
OK <CR><LF>

OMI_I <CR><LF> - command understood but not accessible at this moment

Mode name – parameter, working mode name, inserted in between inverted comas. The name takes form given on a particular balance display, it is provided in a currently selected language.

n - parameter, decimal value determining working mode number.

n → 1 – Weighing
19 – Drying

Caution:

Working modes numbering is identical for each kind of weighing instrument. The numbers are assigned to working modes names.

Some moisture analyzers give only the number as a response.

Example 1:

Command: OMI <CR><LF> - return accessible working modes

Response:	OMI <CR><LF> 19_” Drying” <CR><LF>	- return accessible working modes, mode number + name
	OK <CR><LF>	- command carried out

Example 2:

Command:	OMI <CR><LF>	- return accessible working modes
Response:	OMI <CR><LF> 2 <CR><LF> 4 <CR><LF> 12 <CR><LF>	- accessible working modes are given in return: mode number
	OK <CR><LF>	- command carried out

Set working mode

Command overview:

Command sets particular working mode.

Format: **OMS_n <CR><LF>**

Response options:

OMS_OK<CR><LF>	- command carried out
OMS_E <CR><LF>	- error in-course of command execution, no parameter or incorrect format
OMS_I <CR><LF>	- command understood but not accessible at this moment

n - parameter, decimal value determining working mode number. To see detailed description go to OMI command.

Example:

Command:	OMS_13<CR><LF>	- set Statistics mode
Response:	OMS_OK<CR><LF>	- Statistics mode selected

Give current working mode

Command overview:

Command returns accessible working modes.

Format: **OMG <CR><LF>**

Response options:

OMG_n_OK <CR><LF>	- command carried out, response: current working mode
OMG_I <CR><LF>	- command understood but not accessible at this moment

n - parameter, decimal value determining working mode number. To see detailed description go to OMI command.

Example:

Command:	OMG<CR><LF>	- return current working mode
Response:	OMG_13_OK<CR><LF>	- balance operates in Statistics working mode

Give accessible units

Command overview:

Command returns units available for a particular device and for a current working mode.

Format: **UI <CR><LF>**

Response options:

UI_"x_1,x_2, … x_n"_OK<CR><LF> - command carried out, returns accessible units

UI_I <CR><LF> - command understood but not accessible at this moment

X - unit symbols, separated by means of commas

x → g, mg, ct, lb, oz, ozt, dwt, tlh, tls, tlt, tlc, mom, gr, ti, N, baht, tola, u1, u2

Example:

Command:	UI <CR><LF>	- return available units
Response:	UI_"g, mg, ct"_OK<CR><LF>	- response: available units

Set current unit

Command overview:

Command sets current unit for a particular device.

Format: **US_x <CR><LF>**

Response options:

US_ x_OK <CR><LF> - command carried out, returns accessible units

US_E <CR><LF> - error in-course of command execution, no parameter or incorrect format

US_I <CR><LF> - command understood but not accessible at this moment

x - parameter, units symbols: g, mg, ct, lb, oz, ozt, dwt, tlh, tls, tlt, tlc, mom, gr, ti, N, baht, tola, msg, u1, u2, next

CAUTION:

If x=next the command swaps to another available unit on the list (it simulates button pressing, or taping unit field in mass window).

Example:

Command:	US_mg<CR><LF>	- set „mg" unit
Response:	US_mg_OK<CR><LF>	- „mg" set as a current unit

Give current unit

Command overview:

Command returns current unit.

Format: **UG <CR><LF>**

Response options:

UG_x_OK<CR><LF> - command carried out, returns accessible units

UG_I <CR><LF> - command understood but not accessible at this moment

x - parameter, units symbols:

Example:

Command:	UG<CR><LF>	- return current unit
Response:	UG_ct_OK<CR><LF>	- currently set unit is „ct"

Activate sound signal

Command overview:

Command activates BEEP sound signal for a specified amount of time.

Format: **BP_TIME<CR><LF>**

Response options:

BP_OK <CR><LF> - command carried out, BEEP activated

BP_E” <CR><LF> - no parameter or incorrect format

BP_I <CR><LF> - command understood but not accessible at this moment

TIME - parameter, decimal value specifying how long shall the sound last, parameter given in [ms]. Recommended range <50÷ 5000>.

If value greater than the permissible high limit is given, then BEEP sound is operated for the maximum permissible amount of time.

Example:

Command:	BP_350<CR><LF>	- activate BEEP for 350 ms
Response:	BP_OK<CR><LF>	- BEEP activated

CAUTION:
BEEP sound activated via BP command is inhibited if in-course of its activation the sound is activated by means of other device: keypad, touch panel, proximity sensors.

Send all implemented commands

Format: **PC CR LF**

Command:	**PC CR LF**	- send all implemented commands
Response:	**PC_A_”Z,T,S,SI…”**	- command carried out, the indicator sent all implemented commands.

Give balance type

Format: **BN <CR><LF>**

Response options:

BN_A_”x” <CR><LF> - command understood, response: balance type

BN_I <CR><LF> - command understood but not accessible at this moment

x - series of types for a particular balance (in between inverted commas), with general balance type in front

Example:

Command:	BN <CR><LF>	- Return balance type
Response:	BN_A_”AS”	- balance type: ”AS R”

Give max capacity

Format: **FS <CR><LF>**

Response options:

FS_A_”x” <CR><LF> - command understood, response: Max capacity

FS_I <CR><LF> - command understood but not accessible at this moment

x - Max value of reading units (in between inverted commas)

Example:

Command:	FS <CR><LF>	- Return Max capacity
Response:	FS_A_”220.0000”	- Max capacity: ”220 g”

Give program version

Format: **RV <CR><LF>**

Response options:

RV_A_”x” <CR><LF> - command understood, response: program version

RV_I <CR><LF> - command understood but not accessible at this moment

x - program version (in between inverted commas)

Example:

Command:	RV <CR><LF>	- return program version
Response:	RV_A_" 1.1.1"	- program version: "1.1.1"

Set AUTOZERO Function

Format: **A_n <CR><LF>**

Response options:

A_OK <CR><LF>	- command carried out
A_E <CR><LF>	- error in-course of command execution, no parameter or incorrect format
A_I <CR><LF>	- command understood but not accessible at this moment

N - parameter, decimal value determining autozero settings:

n → 0 – autozero off
1 – autozero on

Caution: Command changes settings for a current working mode.

Example:

Command:	A_1<CR><LF>	- turn autozero function on
Response:	A_OK<CR><LF>	- autozero function is on

AUTOZERO function operates until it is turned off by A 0 command.

Set ambient conditions state

Format: **EV_n <CR><LF>**

Response options:

EV_OK <CR><LF>	- command carried out
EV_E <CR><LF>	- error in-course of command execution, no parameter or incorrect format
EV_I <CR><LF>	- command understood but not accessible at this moment

n - parameter, decimal value determining ambient conditions state

n → 0 – unstable ambient conditions
1 – stable ambient conditions

Caution:
Command changes settings for a current working mode.

Example:

Command:	EV_1<CR><LF>	- set value 'stable' for ambient conditions option
Response:	EV_OK<CR><LF>	- set value 'stable' for ambient conditions option

<AMBIENT CONDITIONS> parameter is set to value <STABLE> until command EV 0 swaps it to value <UNSTABLE>.

Give set ambient conditions state

Command overview:

Command gives information about state of currently set ambient conditions.

Format: **EVG <CR><LF>**

Response options:

EVG_x_OK<CR><LF> - command carried out, response: set ambient conditions state

EVG_I <CR><LF> - command understood but not accessible at this moment

x - parameter, ambient conditions symbols

Example:

Command:	EVG<CR><LF>	- give current ambient conditions state
Response:	EVG_0_OK<CR><LF>	- current ambient conditions state: unstable

Set filter

Format: **FIS_n <CR><LF>**

Response options:

FIS_OK <CR><LF>	- command carried out
FIS_E <CR><LF>	- error in-course of command execution, no parameter or incorrect format
FIS_I <CR><LF>	- command understood but not accessible at this moment

n - parameter, decimal value determining filter number

n →
1 – very fast
2 – fast
3 – average
4 – slow
5 – very slow

The numbering is assigned to a particular filter name and it is identical for all balance types.

The command changes settings for a current working mode if, for a particular balance type, filter settings are assigned to the working mode.

Example:

Command:	FIS_3<CR><LF>	- set average filter
Response:	FIS_OK<CR><LF>	- average filter set

Give current filter setting

Command overview:

Command gives information about currently set filter.

Format: **FIG <CR><LF>**

Response options:

FIG_x_OK<CR><LF> - command carried out, response: currently set filter

FIG_I <CR><LF> - command understood but not accessible at this moment

x - parameter, symbol of currently set filter

Example:

Command:	FIG<CR><LF>	- give current filter
Response:	FIG_2_OK<CR><LF>	- currently set filter: average

Set value release

Format: **ARS_n <CR><LF>**

Response options:

ARS_OK <CR><LF>	- command carried out
ARS_E <CR><LF>	- error in-course of command execution, no parameter or incorrect

	format
ARS_I <CR><LF>	- command understood but not accessible at this moment

n - parameter, decimal value determining value release options

n → 1 – fast
2 – fast + reliable
3 – reliable

CAUTION:
The numbering is assigned to a particular value release option and it is identical for all balance types.

The command changes settings for a current working mode if, for a particular balance type, value release settings are assigned to the working mode.

Example:

Command:	ARS_2<CR><LF>	- set value release parameter to fast+reliable option
Response:	ARS_OK<CR><LF>	- fast+reliable option set

Give current value release setting

Command overview:

Command gives information about current value release setting.

Format: **ARG<CR><LF>**

Response options:

ARG_x_OK<CR><LF>	- command carried out, response: current value release setting
ARG_I <CR><LF>	- command understood but not accessible at this moment

x - parameter, symbol of current value release setting

Example:

Command:	ARG<CR><LF>	- give current value release setting
Response:	ARG_2_OK<CR><LF>	- current value release setting: fast+reliable

Set last digit

Format: **LDS_n <CR><LF>**

Response options:

LDS_OK<CR><LF>	- command carried out
LDS_E <CR><LF>	- error in-course of command execution, no parameter or incorrect format
LDS_I <CR><LF>	- command understood but not accessible at this moment

n - parameter, decimal value determining last digit settings

n → 1 – always
2 – never
3 – when stable

CAUTION:
The numbering is assigned to a particular last digit option and it is identical for all balance types.

The command changes settings for a current working mode if, for a particular balance type, last digit settings are assigned to the working mode.

Example:

Command:	LDS_1<CR><LF>	- set last digit option to value ‘always’
Response:	LDS_OK<CR><LF>	- ‘always’ value set

Give set profile name

Format: **PRG CR LF**

Response options:

PRG_A_”x” CR LF	- command understood, response: profile name
PRG_I CR LF	- command understood but not accessible at this moment

x - profile name (in between inverted commas)

Example:

Command:	**PRG** CR LF	- give profile name
Response:	**PRG** _A_”Fast”	- profile name –-”Fast”

Profile selection

Format: **PROFILE_*Name* CR LF**

where: _ - space (enter name in a form provided by the balance – *lower-case letters and upper-case letters, spaces; e.g. Fast; Fast dosing, User, Precision*).

Response options:

PROFILE OK CR LF	- command understood, new profile set
LOGIN ERROR CR LF	- command understood, an error in name, profile setting impossible
ES CR LF	- command not recognized (error in format)

23.3. Manual Printout / Automatic Printout

MAR series balance enables generating manual or automatic printouts.

- Manual printout: on stabilization of indication (measurement result) press key.
- Automatic printout is generated automatically in accordance with the settings for automatic printout (*see point 15.4.2 of this user manual*).

The content of a printout depends on setting in menu <Standard printout> - <Weighing printout template> (*see point 9.2 of this user manual)*.

Mass printout format:

1	2	3	4 -12	13	14	15	16	17	18
Stability marker	space	character	mass	space	unit			CR	LF

Stability marker	[space] if stable [?] if unstable [^] if high limit is out of range [v] if low limit is out of range
Character	[space] for positive values [-] for negative values
Mass	9 characters with decimal point, right justification
Unit	3 characters, left justification

An example:
_ _ _ _ _ _ **1 8 3 2 . 0** _ **g** _ _ **CR LF** - printout generated using balance upon pressing key, the printout is generated with reference to settings for <GLP printout>:

Date	**NO**	Universal variable 3	**NO**
Time	**NO**	Net	**NO**
User	**NO**	Tare	**NO**
Product	**NO**	Gross	**NO**
Customer	**NO**	Current result	**YES**
Packaging	**NO**	Adjustment report	**NO**
Universal variable 1	**NO**	Non-standard printout	**NONE**
Universal variable 2	**NO**		

24. ERROR MESSAGES

-Err2- Value beyond zero range

-Err3- Value beyond tare range

-Err8- Tarring / Zeroing operation time exceeded

-NULL- Zero value from converter

-FULL- Measurement range exceeded

-LH- Start mass error

25. USING MOISTURE ANALYSER

For measurement temperatures ranging from 161°C to 250°C the time of maintaining the temperature during the measurement is estimated proportionally, ~15 hours for 161°C – 10 min for 250°C.
For a drying process carried out in 250°C, Max temp is maintained for 10 min, next the program automatically lowers the temperature (drying is not interrupted) to 160°C.
Lowering temperature to 160°C takes ~10 min.
For QUICK drying mode Max drying temperature remanipulation is 30% but no more than Max temperature for a particular moisture analyser.

26. MAINTENANCE ACTIVITIES

This section describes how to maintain the moisture analyser in good condition, and how to replace its faulty components (filaments, fuses).

26.1. Cleaning moisture analyser components

In order to ensure required measuring accuracy, the moisture analyser has to be used and stored clean.
While cleaning the moisture analyser, obey precautions provided in this section.

REMEMBER, before initiating any maintenance or cleaning activities or when replacing a fuse of a filament, switch off the moisture analyser and make sure the power cord is unplugged from the mains!

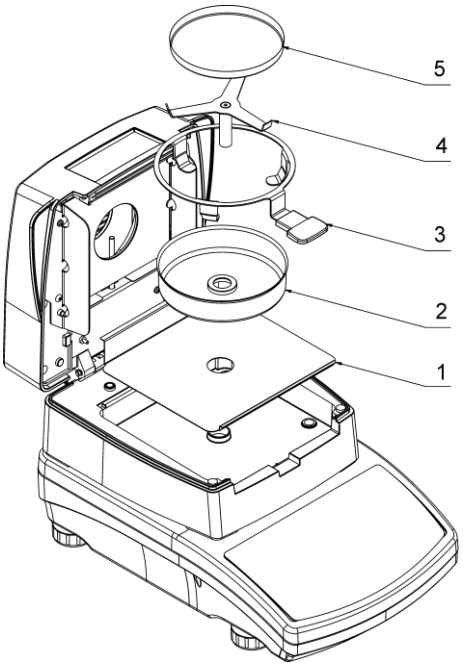

Open moisture analyser's lid and take out all components of the drying chamber: disposable pan (5), cross-shaped holder (4), drying pan handle (3), drying pan shield (2), drying chamber base insert (1).
Clean the moisture analyser using soft fabrics (diaper, chamois, etc.) and non-aggressive cleaning agents.

Do not use any abrasive agents or solvents to clean the moisture analyser, as it may cause damage to the device and its components.
Upon cleaning let the subassemblies dry. Make sure no liquids or dirt get inside the drying chamber.

Install clean components following the diagram.

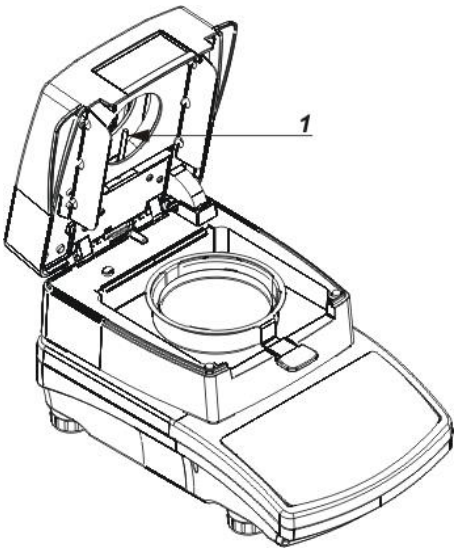

To ensure correct temperature measurement make sure that the temperature sensor is clean (1).
Take extra precautions while cleaning the device.
Clean the moisture analyser using soft fabrics and mild cleaning agents.
Do not use any abrasive agents or solvents as it may cause damage to the sensor.
Neither IR emitter nor halogen shall be touched in the course of cleaning activities, this is to prevent risk of damage.
It is possible to clean emitter's shields if there is such a necessity, use soft fabrics exclusively and remember not to touch the emitters.

26.2. Troubleshooting

Problem: no reaction to pressing main switch on/off key (display remains dark).
Probable cause:

- no voltage in the mains,
- damaged power cord,
- damaged fuse of the moisture analyser,
- moisture analyser's defect.

Problem: too long pending time for drying process finish.
Probable cause:

- Incorrect finish mode selected. Carry out experimental tests to select a proper finish mode.

Problem: lack of measurements repeatability
Probable cause:

- non-uniform sample content; prepare the sample using larger amount of substance.
- the drying time is too short; change finish mode.
- drying temperature is too high, causing sample's oxidizing; lower drying temperature.
- tested sample boils; lower the drying temperature.
- the temperature sensor is contaminated or defected; clean the temperature sensor.
- the weighing table on which the moisture analyser is located is unstable; move the device to a different workstation.
- the ambient area is incompatible with the requirements (vibrations, drafts, etc.); change the ambient conditions for compatible ones according to the guidelines of this user manual.

27. ADDITIONAL EQUIPMENT

Type	Name
P0151	Cable RS232 for printer
	Impact/thermal printer
	PCL Printer
SAL	Anti-vibration table for AS, PS series balances
	PC keyboard – USB type

28. INFORMATION ON THE MOISTURE ANALYSER

This menu provides you with information about the moisture analyser and its installed software. The parameters are strictly informative.

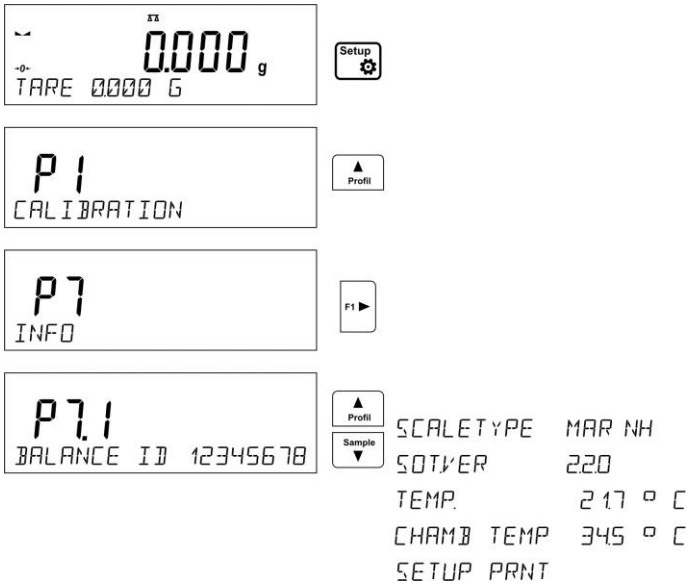

Once the parameter <PRINT. SET> is chosen, the settings are sent to the printer (all parameters). The parameters are transferred via port that was chosen for <PRINTERS>.