USER GUIDE

LX80-Series

Geolux

Distributed by AKRIBIS

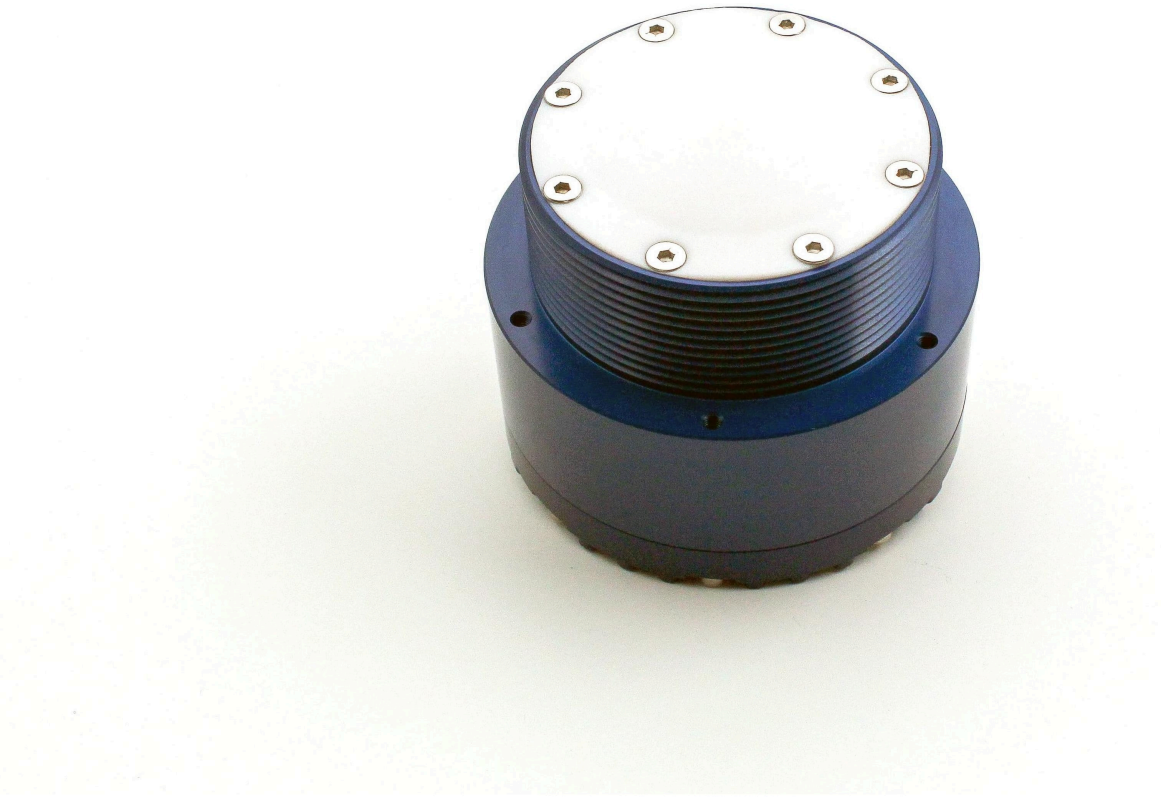

LX-80

Non-Contact Level Meter

User Manual

v2.7.2

Copyright ©2023 Geolux d.o.o. All rights reserved.

Starting Point

Thank you for purchasing the Geolux LX-80 non-contact level meter! We have put together the experience of our engineers, the domain knowledge of our customers, the enthusiasm of our team, and the manufacturing excellence to deliver this product to you.

You may freely rely on our field-proven radar technology. The use of top-quality components and advanced signal processing algorithms ensures that the Geolux level meter can be used in various applications and environments.

We have created this User manual in order to assist you with setting up and using the Geolux instrument.

Should there be any questions left unanswered, please feel free to contact us directly:

Geolux d.o.o.
Ljudevita Gaja 62
10430 Samobor
Croatia

E-mail: **geolux@geolux.hr**
Web: **www.geolux.hr**

Contents

1. Introduction **1**

2. Electrical Characteristics **2**

3. Connector Pin-Out **3**

3.1. Serial RS-232 Interface 4

3.2. Serial RS-485 Interface 4

3.3. CAN Communication Interface (Optional) 5

3.4. Analog 4 – 20 mA Output 5

3.4.1. Devices With Serial Numbers Not Starting With LX8/15/30/50-4 5

3.4.2. Devices With Serial Numbers Starting With LX8/15/30/50-4 8

3.5. SDI-12 Interface 8

4. Installing the Level Meter **9**

4.1. Measurement Through Materials (Containers) 11

4.2. Rain and Wind 11

4.3. Interference and Multiple Radars 11

4.4. Fogging and Evaporation 12

4.5. Reflections 12

4.6. Relative Measurement 12

4.7. Units 13

4.8. Radar Calibration 13

5. Radar Settings **14**

6. Data Interface **21**

6.1. Serial RS-232 Interface 21

6.2. Serial RS-485 Interface 21

7. Data Protocols **22**

7.1. NMEA Protocol (RS-232) 22

7.2. Servicing Protocol (RS-232) 23

7.3. Modbus Protocol (RS-485) 30

7.3.1. Modbus Input Registers 36

7.4. SDI-12 Protocol 38

8. Geolux Instrument Configurator **43**

9. Troubleshooting **47**

10. Appendix A – Mechanical Assembly **54**

1 Introduction

Geolux LX-80 level meter uses radar technology to provide precise contactless measurement of water level. Contactless radar technology enables quick and simple sensor installation above the water surface and requires minimum maintenance. This functionality is achieved by transmitting a frequency-modulated electromagnetic (radio) wave in 80 GHz frequency range (W band), and measuring the frequency shift of the electromagnetic wave reflected from the water surface.

Measured distance from the sensor to the water surface is proportional to the frequency difference between the transmitted and received signal. The radar periodically transmits a linear chirp ranging in frequency from 77 GHz to 81 GHz. As the distance between the radar and water increases, so does the difference between the transmitted and received frequency, enabling the level meter to precisely determine the distance between the sensor and the water. The radio signal modulation and detection algorithms used in the sensor allow very precise measurements that are not dependent on air temperature, humidity, or other parameters of the environment.

The level meter is available in several models, starting with LX-80-8 which is able to detect objects at distances ranging from 0.2 m to 8.0 m; LX-80-15 operating at the range of up to 15 m, LX-80-30 operating up to 30 m, and LX-80-50 operating up to 50m. The basic model reports one level measurement per second (1 Hz), and an oceanographic model reports 10 level measurements per second (10 Hz), for advanced wave analysis.

2 Electrical Characteristics

The electrical characteristics of the Geolux LX-80 level meter are given in Table 1.

Table 1. Electrical Characteristics

Parameter	MIN	TYP	MAX	Unit
Communication interface: RS-232 interface speed RS-485 interface speed	 9600 9600		 115200 115200	 bps bps
Radar Sensor Frequency Beam-width (3dB) – Azimuth Beam-width (3dB) – Elevation	 77.000	 5 (±2.5) 5 (±2.5)	 81.000	 GHz ° °
Power supply voltage	9.0	12.0	27.0	V
Power Operational Standby mode Sleep mode		 360 150 30	 600	 mW mW mW
Operational temperature range	-40		+85	°C
Measurement range	0.2		8 / 15 / 30 / 50	m
Accuracy		2		mm
Resolution		0.5		mm
Analog Output Error			1%	
Ingress Protection Rating	IP68			
Mechanical		ϕ65 x H78		mm

3 Connector Pin-Out

The level meter uses robust IP68 circular M12 connector with 12 positions and a mating cable, both delivered standardly with the instrument. The connector and cable details are shown in Picture 1 while Table 2 gives a detailed description of each pin.

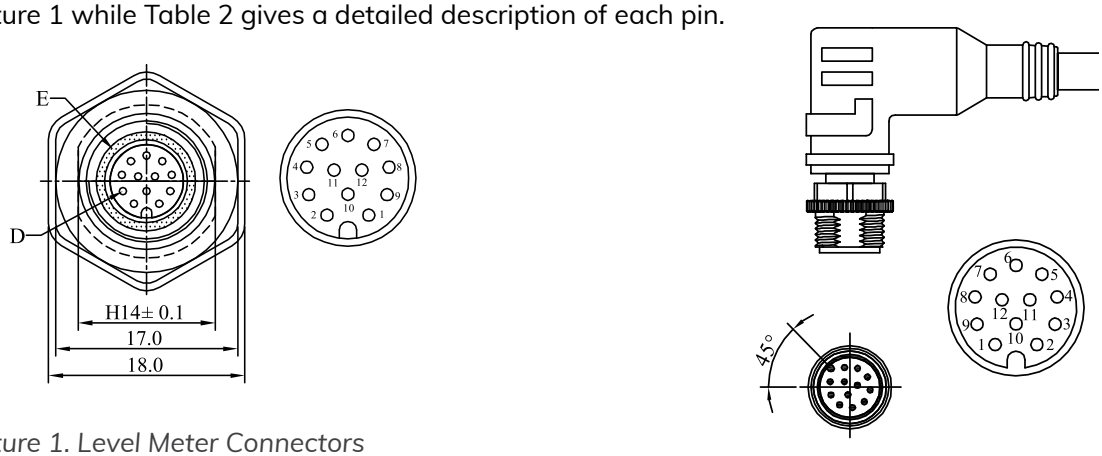

Picture 1. Level Meter Connectors

Table 2. Connector and Cable Pin-out

Pin No.	Wire Color		Pin Name	Pin Description
1	White		GND	This pin should be connected to the ground (negative) pole of the power supply.
2	Brown		+Vin	This is the pin with the instrument's power supply. The level meter power supply voltage must be between 9 VDC to 27 VDC, and the power supply must be able to provide at least 0.65 W.
3	Green		RS232 – TxD	RS-232 data transmit signal.
4	Yellow		RS232 – RxD	RS-232 data receive signal.
5	Grey		GND	Signal ground.
6	Pink		CAN – H	CAN2.0B high signal. (optional)
7	Blue		CAN – L	CAN2.0B low signal. (optional)
8	Red		V+	Output power supply ($+V_{in}$) for supply of external optional equipment and for use with analog 4 – 20 mA output.
			4 – 20 mA LOOP+ *	Positive connector for 4 – 20 mA output loop.
9	Orange		RS485 – D-	RS-485 data transmitter/receiver low signal.
10	Dark Red		RS485 – D+	RS-485 data transmitter/receiver high signal.
11	Black		SDI-12	SDI-12 communication interface.
12	Purple		4 – 20 mA Output	Analog 4 – 20 mA output.
			4 – 20 mA LOOP- *	Negative connector for 4 – 20 mA output loop.

* 4–20 mA LOOP+ and LOOP- is used on devices with serial numbers starting with *LX8/15/30-4* (e.g. LX8-401234, LX15-412345 etc.)

3.1. Serial RS-232 Interface

Serial RS-232 interface is implemented as standard PC full-duplex serial interface with voltage levels adequate for direct connection to PC computers or other embedded devices used for serial RS-232 communication.

When the RS-232 interface is connected to a standard DB-9 PC connector, TxD line (green wire) is connected to pin 2 and RxD (yellow wire) is connected to pin 3. In order for the serial interface to operate properly, an additional connection of signal GND (grey wire) is needed on pin 5 of the DB-9 connector. Optionally, Geolux can supply a cable with DB-9 connector connected to the cable. This requirement must be specified when placing an order.

Several communication protocols are available. Additional custom protocols can be implemented on request. Detailed description of communication protocols is given in chapter 7 of this user manual.

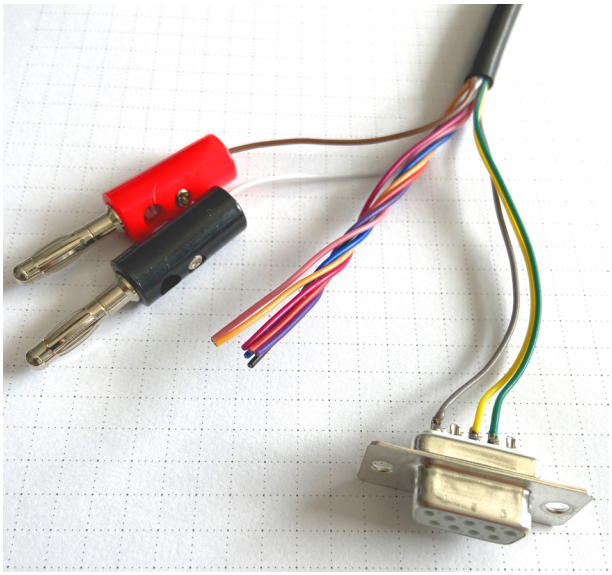

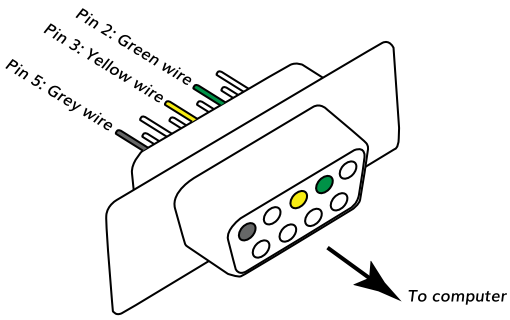

Picture 2. Serial RS-232 DB-9 Cable

Geolux recommends using Waveshare USB TO RS232/485/TTL converter for connecting Geolux instruments to computers without a native RS-232 port.

https://www.waveshare.com/catalog/product/view/id/3629/s/usb-to-rs232-485-ttl/category/37/

3.2. Serial RS-485 Interface

Serial RS-485 interface is implemented as standard industrial half-duplex communication interface. The communication interface is internally short-circuit and overvoltage protected. Depending on the receiving device, the interface can be used with only two wires (D+ dark red wire & D- orange wire) while in some cases the ground connection (signal GND grey wire) is also required. For more details please consult receiver specification.

The most common communication protocol used with RS-485 interface is Modbus-RTU, but other protocols are also available on request. Detailed description of communication protocols is given in chapter 7 of this user manual.

3.3. CAN Communication Interface (Optional)

CAN communication interface is an optional communication interface that can be used for special applications. This interface is a higher speed interface (up to 1 Mbps) than other serial communication interfaces, thus enabling additional data transfer which would otherwise not be possible with RS-232 and RS-485 interfaces.

CAN interface is disabled in the default sensor version - for additional features using CAN interface please contact technical support.

3.4. Analog 4 – 20 mA Output

Analog current 4 – 20 mA output is provided for easier compatibility with older logging and control systems. The implementation of the 4 – 20 mA output differs depending on the serial number of the level meter as explained in the next two chapters.

3.4.1. Devices With Serial Numbers Not Starting With LX8/15/30/50-4

The output is implemented as current sink architecture with common ground. Maximal voltage applied to the sink can go up to 30 VDC, providing greater flexibility in connection of the sensor to PLCs, loggers, or data concentrators.

Signal range and function for 4 – 20 mA analog output can be configured in the setup application so the sensor will be able to signal best suitable value range with available current range. Current step in the sensor is 0.3 µA, which limits the resolution, so care must be taken while setting the minimal value to be represented by 4 mA and the maximal value to be represented by 20 mA, so the resolution is sufficient for the system requirements.

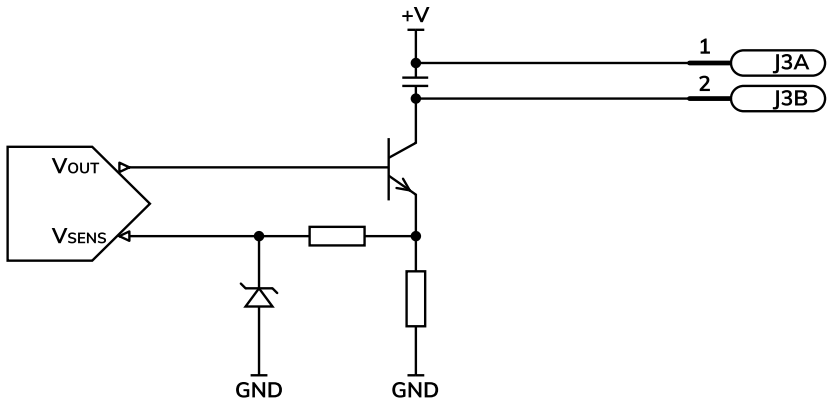

Measurement of the current by the client device (logger, PLC, modem etc.) must be implemented as the high side current measurement as shown in Picture 4. If a sensing resistor is used, resistance should be selected from the range of 10 Ω up to 500 Ω, with a recommended value of 100 Ω for the sensing resistor.

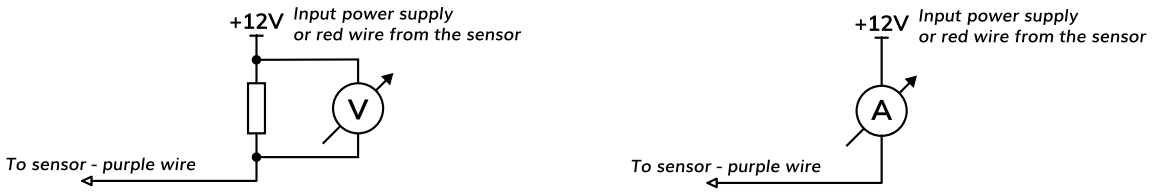

Picture 4. High Side Current Measurement for the 4 – 20 mA Analog Output

Connection to Schneider TM3AM6 analog input module

The TM3AM6 analog module contains 4 analog inputs, marked I0 to I3. Each analog input consists of two connectors, marked as I+ and I-. Each analog input can be configured to work either as analog voltage input (0 – 10 V or -10 to +10 V), or as analog current input (0 – 20 mA or 4 – 20 mA). This is the wiring diagram from the TM3AM6 user manual:

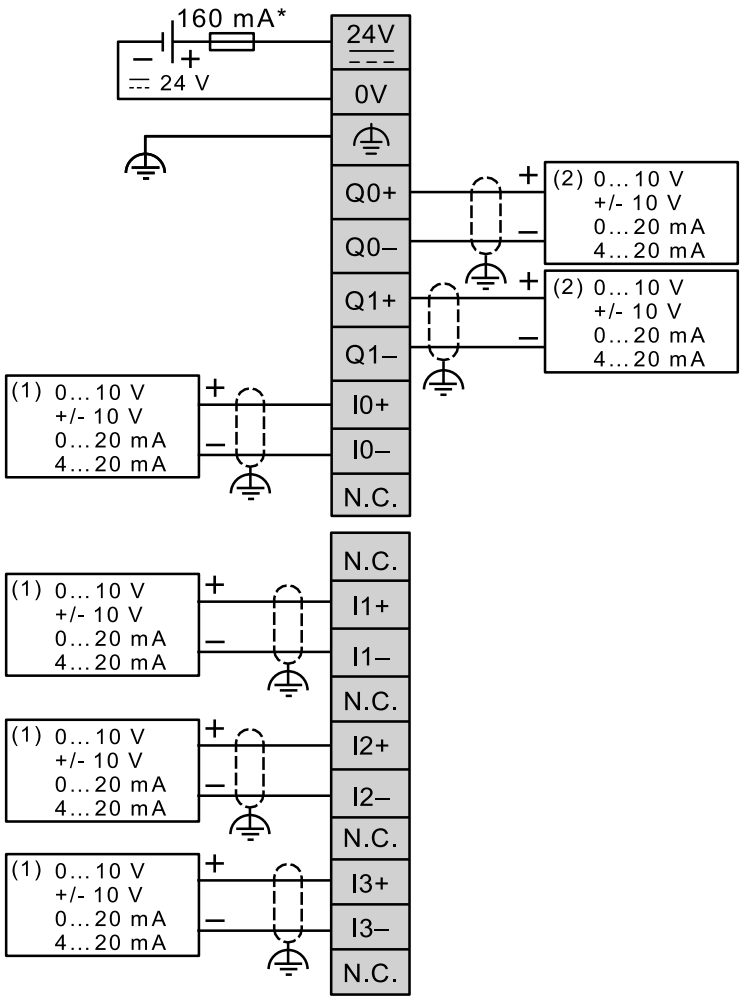

In order to connect the Geolux instrument to the TM3AM6 module, the first step is to configure the selected input port as analog current input operating on 4 – 20 mA range. This is done by using Schneider software. After the analog input module is configured, the second step is to connect the Geolux instrument to the TM3AM6 module, according to the following schematic diagram:

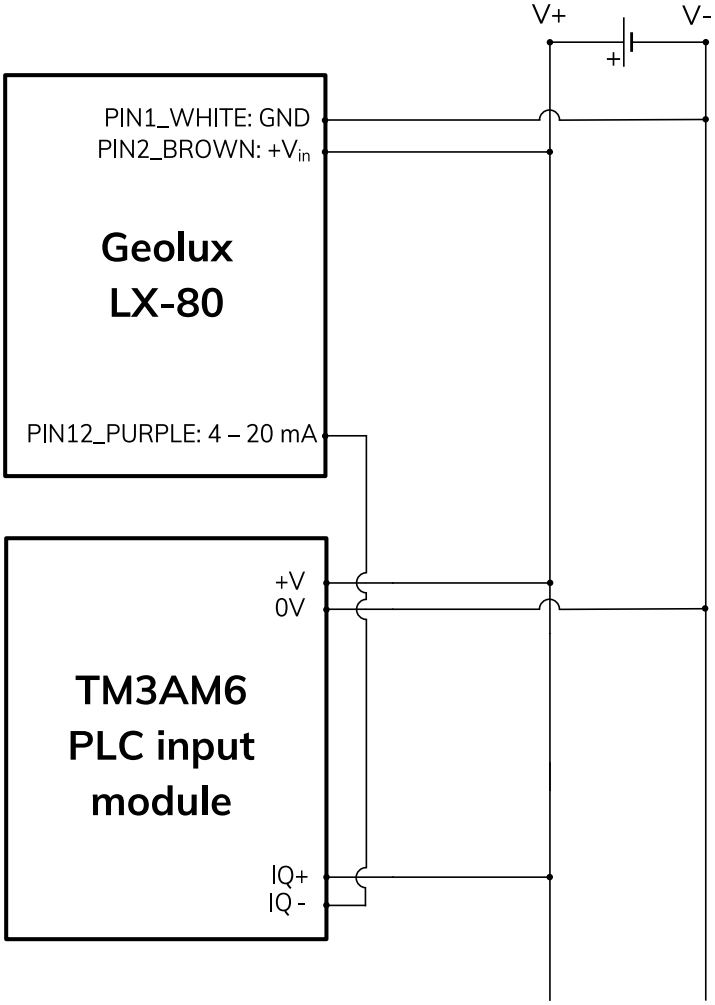

It is important to note that the 4 – 20 mA wire from the Geolux instrument should be connected to negative (-), not positive (+) terminal of the analog input port.

3.4.2. Devices With Serial Numbers Starting With LX8/15/30/50-4

In this revision the LX-80 uses two wires for 4-20 mA: LOOP+ and LOOP-, which should be connected to the LOOP+ and LOOP- terminals on the PLC or the datalogger directly. It is important to note that the instrument still needs to get a separate power supply over white and brown wires. The sensor can not be used in two-wire connection - 4-20 mA wires are used only for measurement, not to provide the power to the instrument. Finally, the 4-20 mA LOOP must be separate from the power supply loop, and there should be no common ground nor common V+ between the 4-20 mA loop and the instrument power supply.

3.5. SDI-12 Interface

SDI-12 interface is widely used to connect hydrological equipment to dataloggers. SDI-12 uses a single communication line, and very slow speed communication to enable the use of very long communication cables.

For hydrological applications, SDI-12 communication interface is a valid option and the instrument is natively able to communicate directly with SDI-12 master devices (dataloggers etc.).

4 Installing the Level Meter

The level meter must be installed above the water surface, pointing directly towards the water surface. The minimum distance between the sensor and the water surface must not be less than 0.2 m. It is recommended to keep the distance between the sensor and the water surface at least 1 metre. The sensor should be directed at a 90° angle relative to the water surface. To simplify instrument installation, the level meter reports its tilt angle over communication interfaces. The field technician can use the PC application to connect to the level meter and check that the tilt angle of the unit is 0° (so that the angle between the radar beam and the water surface is 90°).

When mounting the sensor, special care must be taken to ensure that a direct non-obstructed line to the water surface is available. Any close object in the vicinity of the sensor can reduce accuracy and introduce offsets or errors in measurements.

Vibrations of the mounting structure can also affect measurements and should be reduced by any applicable means.

Picture 5. shows how the radar should be positioned relative to the water surface.

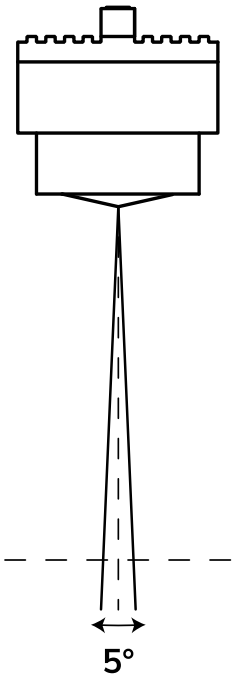

Picture 5. Installing the Level Meter

The radar beam transmitted from the sensor covers a circular area on the water surface. The level meter works best when the water is calm and the surface is smooth, because flat surfaces give optimum reflection of the radar beam. As the radar beam width is defined by 3 dB width angle, the radius of the pattern on the water surface is dependent on the distance between the water surface and the sensor. Calculation of the size of circular pattern on the water surface is calculated and presented in Table 3.

AKRIBIS · www.akribis.info · contacto@akribis.info

Table 3. Relationship Between Height from the Water Surface and Radius of the Radar Beam

Height [m]	Radius [m]	Height [m]	Radius [m]
0.3	0.013	10	0.436
0.5	0.022	11	0.480
1	0.044	12	0.523
2	0.087	13	0.567
3	0.131	14	0.611
4	0.174	15	0.654
5	0.218	20	0.872
6	0.262	25	1.090
7	0.305	30	1.309
8	0.349	40	1.746
9	0.393	50	2.183

Water surface directly below the sensor should be void of vegetation, rocks, sand deposition or other obstacles that could affect measurements. Geolux LX-80 has built-in advanced signal processing algorithms that detect interferences coming from objects close to the water surface, but these algorithms have some limitations. The performance of interference reduction algorithms is further limited when the instrument vibrates due to improper mounting. Best results will be achieved when the measurement location is selected in the recommended way.

If there is slight or moderate roughness (waviness) of the water surface below the level meter, the amount of reflected radar signal will be reduced. This will reduce SNR (Signal to Noise Ratio) on the radar echo curve, but in most cases won't affect measurement accuracy. Strong turbulent flow, with high water roughness, will reduce measurement accuracy due to the unpredictability of the water surface. To improve measurement accuracy in such conditions it is recommended to configure the radar sensor averaging filters to calculate an average level over multiple measurements. If the measured level is highly turbulent, the length of the averaging filter can be adjusted to filter out most, if not all turbulences.

For easier installation, the LX-80 level meter reports the tilt angle along both the x and y axis, according to the following diagram. Both tilt angles should be zero degrees, or not bigger than 2° in any direction.

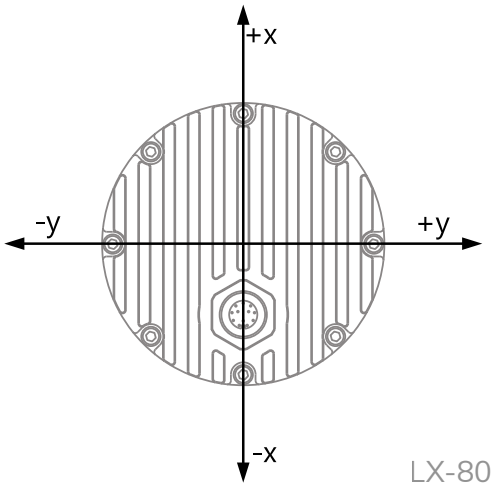

4.1. Measurement Through Materials (Containers)

Geolux LX-80 instrument uses microwave radar for distance measurement. Microwave signals easily pass through most dielectric (non-conductive) materials, so it is possible to mount the radar outside of the container and measure the level of the liquid inside of it. Dielectric materials commonly used in the industry and buildings, such as ABS, PVC, Nylon, PTFE (Teflon), Polycarbonate, Plexiglas, Polyamide, Polypropylene etc., are very suitable for microwave level measurement from outside of the containers. In such applications, the instrument can be placed above the container and pointed at the liquid inside of it.

4.2. Rain and Wind

Geolux LX-80 instrument has integrated internal software filters to filter out effects of rain, fog or wind on radar distance measurements. These filters, however, have some limitations. The majority of measurement inaccuracies caused by environmental factors can be solved by proper sensor installation.

For rain and snow suppression, the most effective solution is to mount the radar so that it points directly to the water surface. As rain or snow fall, they affect the water surface, so it is not as reflective as when there is no precipitation, thus reducing the SNR of the returned radar signal. However, Geolux LX-80 level meters are tested and calibrated to measure the distance to the water level surface even under heavy rainfall.

Influence of the wind on the accuracy is in most cases neglectable. The only exception is strong wind which creates surface waves that can be detected as a shift in water level. To compensate for this effect, it is recommended to increase the length of the averaging filter on the radar sensor, so that it reports an average measurement over a longer period of time.

4.3. Interference and Multiple Radars

The distance measurement radar operates in W-band from 77 GHz to 81 GHz with linear frequency modulation, modulating the signal continuously in the aforementioned frequency range. For interference between two or more sensors to occur, it would be required to keep their central frequencies very precise and the timing synchronization of radars should be kept in the range of 25 ns to each other. Such synchronization is very complex to achieve so the interference probability between several radars on the same location is very small.

It is possible that some wideband radiation sources can introduce small and impulse interferences for a short period of time, but this should not, or is very unlikely to affect measurements reported by the radar sensor.

AKRIBIS · www.akribis.info · contacto@akribis.info

4.4. Fogging and Evaporation

Generally, radar sensors are not affected by fog or evaporation of water unless very heavy evaporation is present and water density in the air is very high.

The best solution for distance measurement is, in most cases, to increase the average period of the averaging filter. As evaporation is naturally a turbulent event with significant difference in density over the surface area and in time, averaging of the distance measurement spectrum solves the accuracy problem in such conditions.

4.5. Reflections

Water reflects radar signals very well, which means most of the power of a wave transmitted from the radar transmitter will be reflected from the surface of the water.

Reflections of the radar transmitted power beam follow the same physical laws as in optics, and every time a radar beam hits the water surface, part of the power is reflected away from the radar, part of the power is reflected towards the radar, and only a small part of the power is absorbed by the water. Depending on the surface roughness and incident angle, the ratio between power reflected in the direction away from the radar and in the direction back towards the radar can significantly vary. As incident angle for radars in fixed, only the roughness of the surface determines the ratio in this case.

In the case of level meters where the incident angle of the transmitted radar beam to the water is around 90°, most of the power is reflected back to the sensor and only a small portion of the transmitter power will be dispersed in all directions. The ratio between the power reflected to the sensor and the power dispersed in all directions is dependent on the surface roughness but generally, a very small amount of energy is dispersed, and it is very unlikely that the dispersed energy will cause additional multipath problems due to more reflections from surrounding objects.

4.6. Relative Measurement

Each sensor unit measures the distance between the sensor and the first detected object. For water level measurement, it is preferred to report the actual water level from the bottom of the riverbed to the surface of the water. That is why we offer relative measurement, which is calculated relative to the mounted sensor height. Sensor height is defined as the distance from the mounted sensor position to the bottom of the riverbed. This distance is a fixed value unique to every mounted unit. It can be set in two ways.

First is by setting the sensor height parameter directly using any of the communication protocols described in the following sections. After setting the sensor height, the relative measurement will be calculated according to the following formula:

RM=SH-D,
where:
RM= relative measurement,
SH=sensor height,
D=measured distance from the sensor to the water.

For example, if the sensor is mounted 6.35 m above the riverbed, and the measured distance from the sensor to the surface is 4.34 m, then the real water level is calculated as the difference of these two values: 6.35 m – 4.34 m = 2.01 m.

In this case the sensor will report 4.34 m as the measured level and 2.01 m as the measured relative level.

Alternatively, it is possible to set the sensor height indirectly, using the staff gauge measurement. In this case, the staff gauge measurement needs to be taken directly underneath the position of the mounted sensor. When setting the sensor height using staff gauge height, the following formula will be used to calculate the sensor height:

SH=D+SG,
where:
SH=sensor height,
D=measured distance from the sensor to the water,
SG=staff gauge measurement.

For example, the sensor is mounted at an unknown height above the riverbed and using a staff gauge it is determined that the water level at that given time is 1.34 m. The sensor detects water at the distance of 6.02 m. By setting the value 1.34 m as the staff gauge measurement at the same time when the device measures the distance as 6.02 m, the sensor height will be calculated as the sum of these two values: 6.02 m + 1.34 m = 7.36 m.

In this case, the sensor will report 6.02 m as the measured level and 1.34 m as the measured relative level.

4.7. Units

Default measurement unit of the LX-80 is millimetres. It is possible to change the measurement unit of the device using any of the aforementioned communication protocols. The following measurement units are supported: millimetres, centimetres, metres, feet and inches. When changing the unit of the device, special care must be taken when setting new parameter values to the device as the device will now use the selected measurement unit for every measurement and every measurement parameter.

4.8. Radar Calibration

The level meter is able to perform self-calibration which calibrates the radar transceiver electronics. Each instrument is calibrated in the factory, and the factory calibration parameters are stored in the device. Typically, there is no need to repeat self-calibration, even after using the level meter over several years. In extremely rare cases, when troubleshooting the level meter that is not accurately measuring the water level, it is recommended to redo the self-calibration. The self-calibration can be triggered by clicking on *Recalibrate radar* button which can be found in the *Settings* view of the Geolux Instrument Configurator application.

5 Radar Settings

To change the radar settings, connect the level meter to the PC computer, and start the Geolux Instrument Configurator PC application. Through the user interface of the application, the following parameters can be configured.

Communication Interfaces Parameters

Baud rate

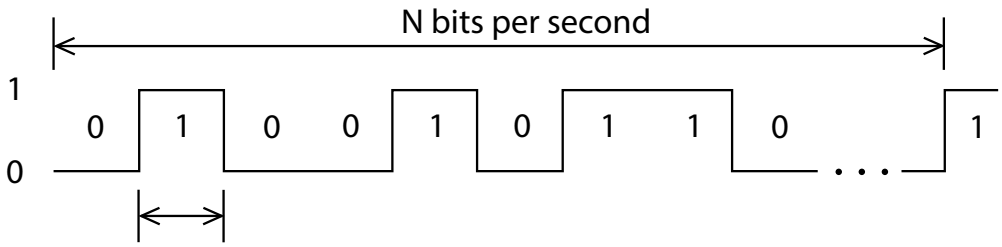

RS-232 baud rate - Configures the baud rate (bits per second) for serial communication on RS-232 data line. This setting controls how many bits are sent on the communication line in one second. The available values are standardised. Using higher baud rates over longer lines may introduce errors in transferred data. The default instrument RS-232 baud rate is 115200 bps.

RS-485 baud rate - Configures the baud rate (bits per second) for serial communication on RS-485 data line. This setting controls how many bits are sent on the communication line in one second. The available values are standardised. Using higher baud rates over longer lines may introduce errors in transferred data. The default instrument RS-485 baud rate is 9600 bps.

RS-232 settings

Configures which parts of NMEA output is available over the interface. This setting is available on devices with firmware versions above 2.3.9. By default the flags parameter is 0, which enables all NMEA sentences. This parameter can be any of the following values:

0 - All NMEA sentences are sent over the interface
2 - $ANG NMEA sentence is not sent over the interface

Device ID

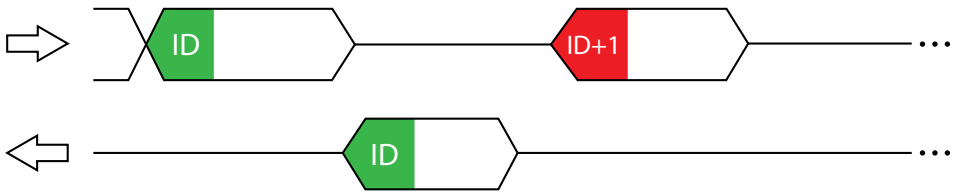

Modbus ID - Configures the device (slave) ID to be used for Modbus RTU protocol. Modbus RTU uses request/response format and allows multiple instruments to be connected on the same bus. When a remote master transmits the request message, it will use the device ID as a device address. All instruments will receive the request, but only the instrument with matching device ID will answer to the received request.

SDI-12 ID - Configures the SDI-12 device ID to be used on SDI-12 interface. In SDI-12 request/response protocol, this ID will be used to define the instrument address, and the instrument will respond only to requests with matching ID.

Modbus Parity

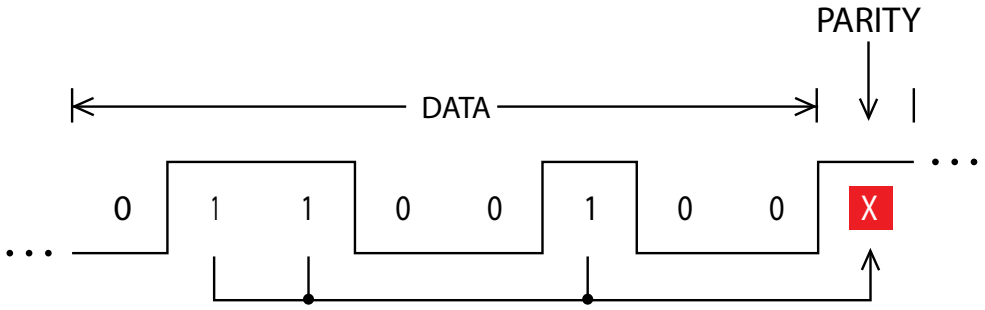

Parity is used in serial communication for basic error detection. When parity is set to *None*, no parity is used, and no error detection is possible on bit level. When parity is set to *Odd parity*, an additional bit is added to the communication that will be set to 1 when there is odd number of bits with value 1 in the 8-bit payload byte. Similarly, when parity is set to *Even parity* an additional bit is added to the communication that will be set to 1 when there is even number of bits with value 1 in the 8-bit payload byte. Generally, all bytes on the receiver side where the parity bit is not matching the message will be discarded. Default setting on most devices that use Modbus is even parity.

Modbus Stop Bits

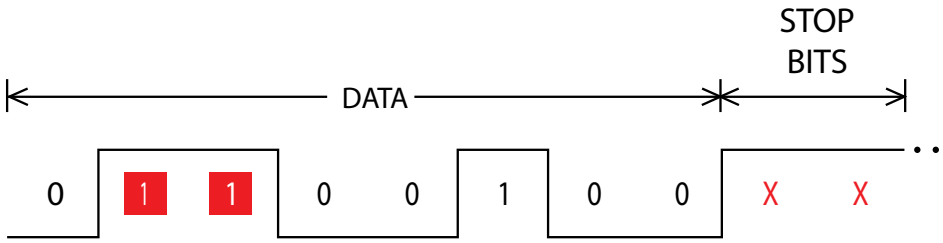

Stop bits are added to the end of each data byte transferred over serial communication, to allow pause between two bytes. One or two bits may be used. The default setting on most Modbus RTU devices is one stop bit, but some dataloggers may require that the instrument is configured to use two stop bits.

4 – 20 mA Parameters

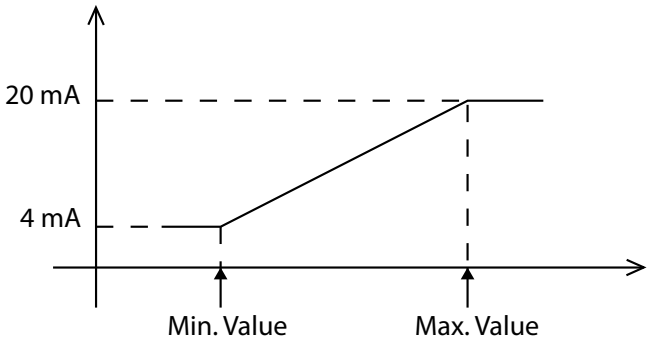

4 – 20 mA min. - To configure the 4 – 20 mA output range, the minimum measured value which will correspond to 4 mA analog output needs to be set. The value is set in the currently configured measurement unit. Example: if values measured by the instrument are expected to be within the range of 700 mm to 5000 mm, it is recommended to configure the minimum value to slightly below 700 mm (for example 500 mm). Alternatively, if the resolution is not critical, then minimum value for 4 – 20 mA output can be left to the instrument minimum of 0 mm.

4 – 20 mA max. – To configure the 4 – 20 mA output range, the maximum measured value which will correspond to 20 mA analog output needs to be set. The value is set in the currently configured measurement unit. Example: if values measured by the instrument are expected to be within the range of 700 mm to 5000 mm, it is recommended to configure the maximum value to slightly above 5000 mm (for example 6000 mm). Alternatively, if the resolution is not critical, then maximum value for 4 – 20 mA output can be left to the instrument maximum.

Processing Parameters

Filter Type

Changing the type of filter which is used to smoothen the measured data.

No filter - No filtering is used and the raw measurements are reported.

IIR - Infinite-Impulse Response filter is used to smooth the data. When compared to moving average filter, IIR filter reacts more quickly to initial change in the data, but it takes longer for the smoothed value to reach the new measurement. The use of IIR filter is discouraged for general applications. The IIR constant can be configured separately.

Moving average - The moving average filter calculates the average value of a number of raw measurements. The length for the moving average filter is configured separately through the *Filter length* parameter.

Median - The median filter finds the median value from a number of raw measurements. The length for the median filter is configured separately through Filter length parameter.

Standard deviation - This type of filter is similar to the moving average filter. It takes a number of raw measurements (as defined by *Filter length* parameter), then removes 20% of outliers, and calculates the average of the remaining 80% of values.

Devices with firmware versions up to 2.2.8. support only *No filter*, *IIR* and *Moving average*. In this case, it is recommended to use the moving average filter. Devices with firmware versions up to 2.3.2. support *No filter*, *IIR*, *Moving average* and *Median*. For those devices it is recommended to use moving average or median filter. Devices with firmware versions greater than 2.3.3. support all the filters listed above. The standard deviation filter gives the best results.

Filter Length

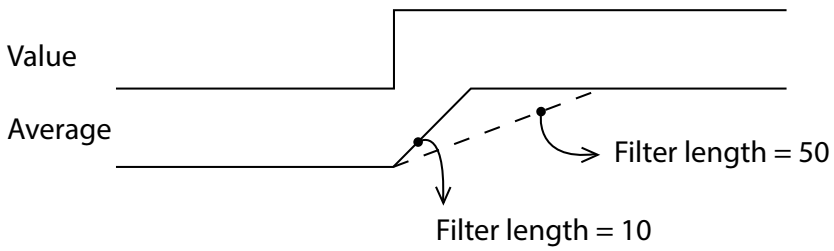

The length of the averaging filter, in number of readings, used to smooth the measured values. The instrument performs 1 reading per second, so a filter length value of 10 will result in 10 seconds integration time. When using longer filter lengths, more measured values are used for filtering, and the resulting data will be smoother. However, when the water level changes, it will take more time for the new measurement to be reported. Typically, this parameter should be set to a value between 10 and 50. For highly turbulent water, longer filter length is recommended.

IIR Constant

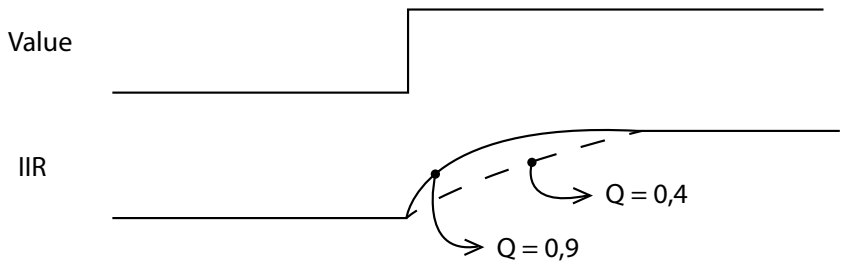

The constant used by infinite impulse response (IIR) filter - if IIR filter is selected to be used instead of average filter. Accepted values are decimal numbers between 0 and 1. When the IIR constant value is closer to 0.0, the filter response will be slower. When the IIR constant value is closer to 1.0, then the filter response will be faster.

Peak Detector Type

Configures the type of algorithm which is used to detect the peaks in the radar echo curve. The default setting should be *Maximum peak*. In specific cases, such as when the water level needs to be measured, but there is a lot of vegetation protruding from the water surface, *Last peak* detector type should be used.

Measurement Parameters

Level Unit

The measurement unit used to report the measured level value. The default measurement unit is millimetres. When changing the measurement unit, it's important to make sure that other parameters which depend on the measurement unit (such as active zone parameters) are also changed to the new unit.

Level Offset

Changes the measurement level offset. This value should not be changed.

Active Zone Parameters

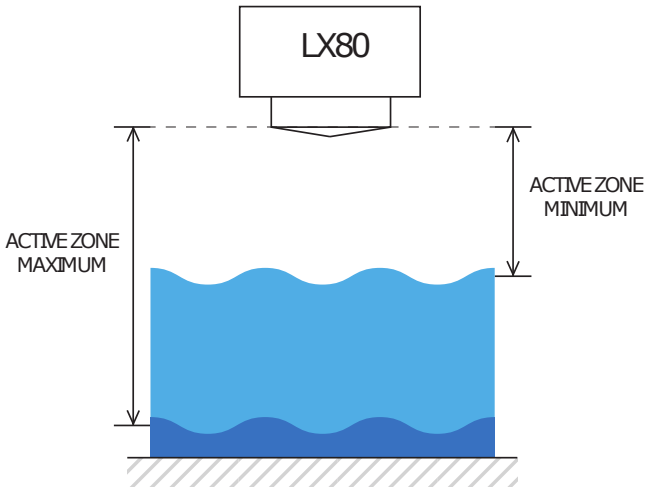

These parameters limits the operational range of the instrument. The instrument will detect water level only within the range set by the *Active zone min.* and *Active zone max.* parameters. These parameters are the best way to filter unwanted radar reflections from other structures and objects that are present on the monitoring site, that could cause false instrument readings.

Active zone min. - It is strongly recommended to set the *Active zone min.* value to the minimum possible distance between the water and the instrument at the specific monitoring site.

Active zone max. - It is strongly recommended to set the *Active zone max.* value to the maximum possible distance between the water and the instrument at the specific monitoring site. Typically, this is the distance between the instrument and the lowest point in the channel.

Sensor Height

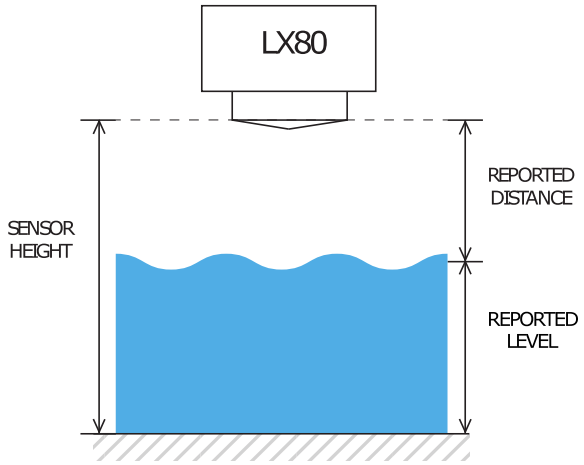

The height of the instrument needs to be set above the water zero-level "gauge zero". The instrument will output relative measurement of the actual water level based on its height above the water zero-level. Example: if the instrument is mounted exactly 5 metres above the gauge zero level, then this parameter should be set to 5 metres. Then, if the instrument measures that the distance between the instrument and the water is 4 metres, it will report that the water level is 1 metre, because the water is 1 metre above the gauge-zero level. For user convenience, this parameter can also be indirectly set by inputting the current staff gauge reading.

Staff Gauge

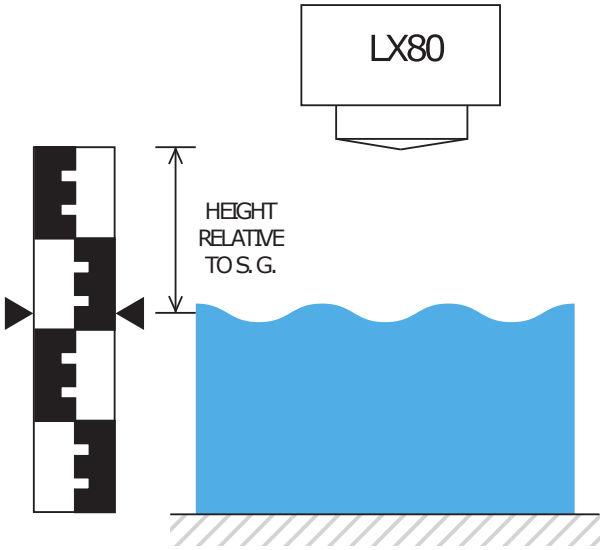

Setting the sensor height relative to the measurement is done using staff gauge. The sensor will output relative measurement of the actual water level based on its height above the riverbed.

Operation Mode

Switching the device from operating mode to standby mode and back. While the device is in standby mode, it will communicate through communication interfaces, but no measurements will be made. In operating mode, the device continuously performs measurements. In standby mode, the power consumption is reduced by 50%.

Power Management

Switching the device between continuous scanning mode and SDI-12 mode. In continuous scanning mode the device constantly performs measurements, which are transmitted over RS-232 interface and made available over Modbus and SDI-12 interfaces. The device is always available over RS-232 and Modbus interfaces. In SDI-12 mode, the device remains in sleep mode until SDI-12 Measure (aM!) command is received. While in sleep mode, the device will not be able to connect to Modbus or RS-232 interface. For the reconfiguration of the device which is set to operate in SDI-12 mode, it's necessary to power-cycle the device, and then use the Geolux Instrument Configurator application to connect to the device within 1 minute after power-up. If there is no attempt to connect to the device over RS-232 within one minute, the device will automatically go back to sleep mode. While the device is in sleep mode, it consumes only 0.03 W.

Factory reset

Revert the device to default factory settings. To fully revert the device to factory settings, the device must be power-cycled after the factory reset command is executed. Factory reset is available for devices with firmware versions greater than 2.3.9.

Force continuous calibration

The radar level sensor needs to be periodically recalibrated. Under normal operation, the radar recalibrates itself every time after it is powered-up, and every minute while it is operating. If force continuous calibration is turned on, the radar will recalibrate itself every second. Under normal conditions, it is not required to force continuous calibration but if the radar measurements are not accurate turning on continuous calibration will improve the radar accuracy. When continuous calibration is turned on, the radar power consumption will increase by approximately 20%. This setting is available on devices with firmware versions above 2.3.9.

AKRIBIS · www.akribis.info · contacto@akribis.info

6 Data Interface

Geolux LX-80 level meter offers multiple data interfaces, in order to make the integration of the device with existing SCADA/telemetry systems easy.

6.1. Serial RS-232 Interface

Serial RS-232 interface is used for direct connection of a single level meter unit with the computer. The serial interface is used both for retrieving live level measurements and for configuration of the level meter device. Geolux provides a PC application for instrument configuration and level monitoring free of charge.

Default communication parameters are:

Bitrate:	115200 bps
Data bits:	8
Stop bits:	1
Parity:	None

A NMEA-like communication protocol is used to deliver level measurements over the RS-232 interface. A detailed description of the protocol is given in chapter 7 of this user manual.

6.2. Serial RS-485 Interface

Serial RS-485 interface is used for connecting multiple level meters to a single data logger. RS-485 interface uses a different protocol then the protocol used over RS-232 interface, in order to allow multiple level meters connected on a single RS-485 bus. The main difference from the protocol used over RS-232 interface is that the level measurements are not reported automatically but are instead reported only after being requested by the master device (data logger unit). LX-80 supports Modbus protocol over RS-485 bus. A detailed description of the protocol is given in chapter 7 of this user manual.

Default communication parameters are:

Bitrate:	9600 bps
Data bits:	8
Stop bits:	1
Parity:	Even
Device ID:	1

7 Data Protocols

Geolux LX-80 level meter supports the following data protocols:

- NMEA-like protocol on RS-232 interface that constantly outputs the detected current level and averaged level, depending on the active settings for data filtering
- Servicing protocol on RS-232 interface for configuring the unit
- Request-response protocol (Modbus) on RS-485 interface that allows multiple units to be used on a single RS-485 bus
- SDI-12 protocol over SDI-12 interface

Support for additional protocols is available upon customer request.

7.1. NMEA Protocol (RS-232)

NMEA protocol is based on the standard protocol family widely used by navigation equipment. NMEA protocol is sentence oriented and can send multiple sentences with different information. The sentence content is designated by the starting keyword which is different for each sentence type. NMEA sentences are terminated with the checksum which makes this protocol extremely reliable. NMEA protocol is unidirectional; data is only transmitted from the level meter.

At RS-232 interface the device periodically outputs following data sentences:

Level measurement report

$LVX,L1,L2,T1,L3,L4,S1*CSUM <CR><LF>	firmware versions up to 2.3.2
$LVX,L1,L2,T1,L3,L4,S1,S2*CSUM <CR><LF>	firmware versions greater than 2.3.2

$LVX: The keyword sent in the beginning of each detection report. This sentence is sent whenever there is detected level.

L1: The actual distance between the instrument and the water surface, as measured by the instrument.

L2: The average distance between the instrument and the water surface, as measured by the instrument. This value is calculated by applying the averaging filter to the data measurements. Filter parameters can be adjusted using the Geolux Instrument Configurator application under device *Settings*.

T1: The internal temperature of the instrument.

L3: The actual water level measured by the instrument. The measured water level depends on the measured distance between the instrument and the water surface, and on the predefined instrument offset which can be adjusted using the Geolux Instrument Configurator application under device *Settings*.

L4: The average water level measured by the instrument. The measured water level depends on the measured distance between the instrument and the water surface, and on predefined instrument offset which can be adjusted

AKRIBIS · www.akribis.info · contacto@akribis.info

under device *Settings*. The measured water level is filtered using averaging filer, to smooth the measured data. Filter parameters can be adjusted using the Geolux Instrument Configurator application under device *Settings*.

S1: Signal to Noise Ratio of the detected signal. SNR is the difference between signal level corresponding to measured distance and the noise floor level. Low SNR levels indicate that the measured value may be inaccurate. A value of -99 dB indicates a serious problem with the device - contact Geolux support.

S2: The standard deviation of water level measurements. The number of samples used to calculate the standard deviation is equal to the configured filter length. This parameter is available on units with firmware versions greater than 2.3.2.

CSUM: The check sum of the characters in the report from $ to * excluding these characters.

Tilt angle report

$ANG,A1,A2*CSUM <CR><LF> firmware versions greater than 2.3.5

$ANG: The keyword sent in the beginning of each angle report.

A1: The tilt angle of the instrument along X axis. For proper operation of the instrument, ensure that this angle is zero, or as close to zero as possible (between -1 and +1 degrees).

A2: The tilt angle of the instrument along Y axis. For proper operation of the instrument ensure that this angle is zero, or as close to zero as possible (between -1 and +1 degrees).

CSUM: The check sum of the characters in the report from $ to * excluding these characters.

7.2. Servicing Protocol (RS-232)

The servicing protocol is used to retrieve and modify the instrument's operating parameters. Various instrument settings, such as unit system and filtering parameters are configured using this protocol. Since NMEA protocol is one way (it only outputs the data), the servicing protocol is always active.

To make instrument configuration easy, Geolux provides the Geolux Instrument Configurator utility application. Regular users do not need to be concerned about the servicing protocol used between the Geolux Instrument Configurator and the level meter device. Geolux Instrument Configurator is described in the chapter 8 of this user manual.

The servicing protocol listens on the RS-232 serial port for incoming requests, and on each received request, it will answer back.

The following requests are recognized by the servicing protocol and every command should be followed by <CR>, <LF> or <CR><LF> (enter).

AKRIBIS · www.akribis.info · contacto@akribis.info

Change interfaces parameters:

RS-232 baud rate - Configures the baud rate (bits per second) for serial communication on RS-232 data line. This setting controls how many bits are sent on the communication line in one second. The available values are standardised. Using higher baud rates over longer lines may introduce errors in transferred data. The default instrument RS-232 baud rate is 115200 bps.

#set_baud_rate = 9600
#set_baud_rate = 38400
#set_baud_rate = 57600
#set_baud_rate = 115200
#set_baud_rate = 19200

RS-232 settings - Configures which parts of NMEA output is available over the interface. This setting is available on devices with firmware versions above 2.3.9. By default the flags parameter is 0, which enables all NMEA sentences. This parameter can be any of the following values:

0 - All NMEA sentences are sent over the interface
2 - $ANG NMEA sentence is not sent over the interface

#set_nmea_protocol_flags=0 (All NMEA sentences are sent)
#set_nmea_protocol_flags=2 ($ANG is not sent)

RS-485 baud rate - Configures the baud rate (bits per second) for serial communication on RS-485 data line. This setting controls how many bits are sent on the communication line in one second. The available values are standardised. Using higher baud rates over longer lines may introduce errors in transferred data. The default instrument RS-485 baud rate is 9600 bps.

#set_modbus_baud_rate=9600
#set_modbus_baud_rate=38400
#set_modbus_baud_rate=57600
#set_modbus_baud_rate=115200
#set_modbus_baud_rate=1200
#set_modbus_baud_rate=19200

Modbus ID - Configures the device (slave) ID to be used for Modbus RTU protocol. Modbus RTU uses request/response format and allows multiple instruments to be connected on the same bus. When a remote master transmits the request message, it will use the device ID as a device address. All instruments will receive the request, but only the instrument with matching device ID will answer to the received request.

#set_modbus_id=<1-247>

Modbus parity - Parity is used in serial communication for basic error detection. When parity is set to *none*, no parity is used, and no error detection is possible on bit level. When parity is set to *odd parity*, an additional bit is added to the communication that will be set to 1 when there is odd number of bits with value 1 in the 8-bit payload byte. Similarly, when parity is set to *even parity*, an additional bit is added to the communication that will be set to 1 when there is even number of bits with value 1 in the 8-bit payload byte. Generally, all bytes on the receiver side where the parity bit is not matching the message will be discarded. Default setting on most devices that use Modbus is even parity.

#set_modbus_parity=0	(none)
#set_modbus_parity=1	(odd parity)
#set_modbus_parity=2	(even parity)

Modbus stop bits - Stop bits are added to the end of each data byte transferred over serial communication, to allow pause between two bytes. One or two bits may be used. The default setting on most Modbus RTU devices is one stop bit, but some dataloggers may require that the instrument is configured to use two stop bits.

#set_modbus_stopbits=1
#set_modbus_stopbits=2

SDI-12 ID - The SDI-12 device ID to be used on SDI-12 interface. In SDI-12 request/response protocol, this ID will be used to define the instrument address, and the instrument will respond only to requests with matching ID.

#set_sdi_id=<0-61>

4 – 20 mA min. - To configure the 4 – 20 mA output range, the minimum measured value which will correspond to 4 mA analog output needs to be set. The value is set in the currently configured measurement unit. Example: if values measured by the instrument are expected to be within the range of 700 mm to 5000 mm, it is recommended to configure the minimum value to slightly below 700 mm (for example 500 mm). Alternatively, if the resolution is not critical, then minimum value for 4 – 20 mA output can be left to the instrument minimum of 0 mm.

#set_analog_min=<value>

4 – 20 mA max. – To configure the 4 – 20 mA output range, the maximum measured value which will correspond to 20 mA analog output needs to be set. The value is set in the currently configured measurement unit. Example: if values measured by the instrument are expected to be within the range of 700 mm to 5000 mm, it is recommended to configure the maximum value to slightly above 5000 mm (for example 6000 mm). Alternatively, if the resolution is not critical, then maximum value for 4 – 20 mA output can be left to the instrument maximum.

#set_analog_max=<value>

Change processing parameters:

Filter type - Changing the type of filter used for smoothing measured data.

No filter - No filtering is used and the raw measurements are reported.

IIR - Infinite-Impulse Response filter is used to smooth the data. When compared to moving average filter, IIR filter reacts more quickly to initial change in the data, but it takes longer for the smoothed value to reach the new measurement. The use of IIR filter is discouraged for general applications. The IIR constant can be configured separately.

Moving average - The moving average filter calculates the average value of a number of raw measurements. The length for the moving average filter is configured separately through Filter length parameter.

Median - The median filter finds the median value from a number of raw measurements. The length for the median filter is configured separately through *Filter length* parameter.

Standard deviation - This type of filter is similar to the moving average filter. It takes a number of raw measurements (as defined by *Filter length* parameter), then removes 20% of outliers, and calculates the average of the remaining 80% of values.

#set_filter_type=0	(No filter)
#set_filter_type=1	(IRR)
#set_filter_type=2	(Moving average)
#set_filter_type=3	(Median, supported on units with firmware versions greater than 2.2.8)
#set_filter_type=4	(Standard deviation, supported on units with firmware versions greater than 2.3.2)

Filter length - The length of the averaging filter, in number of readings, to smooth the measured values. The instrument performs 1 reading per second, so a filter length value of 10 will result in 10 seconds integration time. When using longer filter lengths, more measured values are used for filtering, and the resulting data will be smoother. However, when the water level changes, it will take more time for the new measurement to be reported. Typically, this parameter should be set to a value between 10 and 50. For highly turbulent water, larger filter length is recommended.

#set_frame_number=<1-1000>

IIR constant - The constant used by infinite impulse response (IIR) filter - if IIR filter is selected to be used instead of average filter. Accepted values are decimal numbers between 0 and 1. When the IIR constant value is closer to 0.0, the filter response will be slower. When the IIR constant value is closer to 1.0, then the filter response will be faster.

#set_IR_constant=<0-1>

Peak detector type - Configuring the type of algorithm which is used to detect the peaks in the radar echo curve. The default setting should be *Maximum peak*. In specific cases, such as when water level needs to be measured, but there is a lot of vegetation protruding from the water surface, *Last peak* detector type should be used. This setting is available on units with firmware versions greater than 2.3.2.

#set_peak_detector=0 (Maximum peak)
#set_peak_detector=1 (Last peak)
#set_peak_detector=2 (First peak)

Change measurement parameters:

Level unit - The measurement unit used to report the measured level value. The default measurement unit is millimetres. When changing the measurement unit, it's important to make sure that other parameters which depend on the measurement unit (such as active zone parameters) are also changed to the new unit.

#set_unit=0 (mm)
#set_unit=1 (cm)
#set_unit=2 (m)
#set_unit=3 (in)
#set_unit=4 (ft)

Level offset - Changes the measurement level offset. This value should not be changed.

#set_level_offset=<value>

Active zone min. - This parameter limits the operational range of the instrument. The instrument will detect water level only within the range set by the *Active zone min*. and *Active zone max*. parameters. This parameter is the best way to filter unwanted radar reflections from other structures and objects that are present on the monitoring site, that could cause false instrument readings. It is strongly recommended to set the *Active zone min*. value to the minimum possible distance between the water and the instrument at the specific monitoring site.

#set_deadzone_min=<value>

Active zone max. - This parameter limits the operational range of the instrument. The instrument will detect water level only within the range set by the *Active zone min*. and *Active zone max*. parameters. This parameter is the best way to filter unwanted radar reflections from other structures and objects that are present on the monitoring site, that could cause false instrument readings. It is strongly recommended to set the *Active zone max*. value to the maximum possible distance between the water and the instrument at the specific monitoring site. Typically, this is the distance between the instrument and the lowest point in the channel.

#set_deadzone_max=<value>

Sensor height - The height of the instrument needs to be set above the water zero-level “gauge zero”. The instrument will output relative measurement of the actual water level based on its height above the water zero-level. Example: if the instrument is mounted exactly 5 metres above the gauge zero level, then this parameter should be set to 5 metres. Then, if the instrument measures that the distance between the instrument and the water is 4 metres, it will report that the water level is 1 metre, because the water is 1 metre above the gauge-zero level. For user convenience, this parameter can also be indirectly set by inputting the current staff gauge reading, by clicking on Enter staff gauge reading button.

#set_sensor_height=<value>

Staff gauge - Setting the sensor height relative to the measurement is done using staff gauge. The sensor will output relative measurement of the actual water level based on its height above the riverbed.

#set_staff_gauge=<value>

Power management - Switching the device between continuous scanning mode and SDI-12 mode. In continuous scanning mode the device constantly makes measurements, which are transmitted over RS-232 interface and made available over Modbus and SDI-12 interfaces. The device is always available over RS-232 and Modbus interfaces. In SDI-12 mode, the device remains in the sleep mode until SDI-12 Measure (aM!) command is received. While in sleep mode, the device will not be able to connect to Modbus or RS-232 interface. For reconfiguring the device which is set to operate in SDI-12 mode, it’s necessary to power-cycle the device, and then use this application to connect to the device within 1 minute after power-up. If there is no attempt to connect to the device over RS-232 within one minute, the device will automatically go back to sleep mode. While the device is in sleep mode, it consumes only 0.03 W.

#set_sdi_sleep=0	(SDI-12 automatic sleep)
#set_sdi_sleep=1	(Continuous scanning)

Operation mode - Switching the device from operating mode to standby mode and back. While the device is in standby mode, it will communicate through communication interfaces, but no measurements will be made. In operating mode, the device continuously performs the measurements. In standby mode, the power consumption is reduced by 50%.

#set_power_save=0	(Operating mode)
#set_power_save=1	(Standby mode)

Factory reset - Revert the device to default factory settings. To fully revert the device to factory settings, the device must be power-cycled after the factory reset command is executed. Factory reset is available for devices with firmware versions greater than 2.3.9.

#factory_reset

Force continuous calibration - The radar level sensor needs to be periodically recalibrated. Under normal operation, the radar recalibrates itself every time after it is powered-up, and every minute while it is operating. If force continuous calibration is turned on, the radar will recalibrate itself every second. Under normal conditions, it is not required to force continuous calibration but if the radar measurements are not accurate turning on continuous calibration will improve the radar accuracy. When continuous calibration is turned on, the radar power consumption will increase for approximately 20%. This setting is available on devices with firmware versions above 2.3.9.

#force_calibration=0	(Turned off)
#force_calibration=1	(Turned on)

Retrieve current device status

#get_info

Requests the current device status. Here is an example status output:

```
# device_type:997
# firmware:2.4.0
# serial_number:300103
# sdi12_id:0
# sdi_sleep:1
# power_save:0
# modbus_id:1
# can_id:0
# can_speed:1000
# baud_rate:115200
# rs485_baud_rate:9600
# rs485_databits:8
# rs485_parity:0
# rs485_stopbits:1
# filter_type:2
# averaging_frame_number:15
# spectrum_amplitude_threshold:0
# peak_detector:0
# RX_gain:216
# unit_type:0
# wave_analysis_lenght:300
# iwr_status:1
# bandwidth:0
# nmea_protocol_flags:2
# force_calibration:1
# level_range:15000.0
# measurement_frequency:1.0
# level_offset:0.0
# deadzone_min:200.0
# deadzone_max:15000.0
# analog_output_min:0.0
# analog_output_max:15000.0
# IR_constant:500.0
# sensor_height:-0.000
```

7.3. Modbus Protocol (RS-485)

The unit responds to Modbus requests over RS-485 data line. The baud rate is configured through the PC application, and 1 stop bit, even parity, 8 data bits configuration is used.

Modbus registers that are accessed by Modbus protocol are 16-bit (2-byte) registers. Any number of registers can be read or written to over Modbus.

Modbus is a request-response protocol where a master (such as datalogger) sends out requests, and slave devices (such as LX-80 sensor) respond. The request and response format, with examples is given in Tables 4-7.

In each request, the master can either ask the slave to retrieve the value of one or more registers, or the master can set the value of one or more registers. Each register holds one 16-bit value.

Table 4. Master Request Format

Name	Address	Fun	Data Start Address		Register Count		CRC16	
Length	1 byte	1 byte	2 bytes (H,L)		2 bytes (H,L)		2 bytes (L,H)	
Example	0x01	0x03	0x00	0x00	0x00	0x01	0x84	0x0A

Table 5. Request Example

Name	Content	Detail
Address	0x01	Slave address (Sensor id)
Function	0x03	Read holding register
Data start address	0x00	The address of the first register to read minus one (HIGH)
	0x00	The address of the first register to read minus one (LOW)
Number of regs	0x00	High
	0x01	Low (read only 1 register)
CRC16	0x84	CRC Low
	0x0A	CRC High

Table 6. Slave (sensor) Response Format

Name	Address	Fun	Byte Count	Data		CRC16	
Length	1 byte	1 byte	1 byte	2 bytes(H,L)		2 bytes(L,H)	
Example	0x01	0x03	0x02	0x00	0x01	0x79	0x84

Please note that Modbus register addresses start with 1 i.e. the lowest possible address for the Modbus register is 1. However, in the Modbus request packet the data start address is written as the address of the first register to read minus one. For example, to retrieve the Modbus register number 5, in Modbus data packet the address of that register should be written as 4.

Table 7. Response Example

Name	Content	Detail
Address	0x01	Slave address (Sensor id)
Function	0x03	Read holding register
Data length	0x02	Data length is 2 bytes
Data	0x00	Data high byte
	0x01	Data low byte, means ID is 1
CRC16	0x79	CRC Low
	0x84	CRC High

Table 8 defines the data returned by the instrument when the master requests that the register is read. Table 9 defines how to write the device configuration. Rows highlighted in blue denote the important values measured by the sensor. Rows highlighted in green denote operating parameters that could be changed in the field. In Tables 7 and 8, field *Fun* corresponds to Modbus function codes, i.e. 0x03 – *Read holding register* and 0x06 – *Write holding register*.

Table 8. Retrieving Data from the Sensor

Fun	Register Address	Data Length	Data Range	Details
0x03	0x0001	2 bytes	0 – device range[mm]	Current level measurement
	0x0002	2 bytes	0 – device range[mm]	Average level measurement
	0x0003	2 bytes	0 → 9600 1 → 38400 2 → 57600 3 → 115200 4 → 1200 5 → 19200 0xFF → other/error	RS-232 baud rate
	0x0004	2 bytes	1 – 247	Modbus ID
	0x0005	2 bytes	0 → 9600 1 → 38400 2 → 57600 3 → 115200 4 → 1200 5 → 19200 0xFF → other/error	RS-485 baud rate (Modbus)
	0x0006	2 bytes	0 → no parity, 1 stop bit 1 → no parity, 2 stop bits 2 → odd parity, 1 stop bit 3 → odd parity, 2 stop bits 4 → even parity, 1 stop bit 5 → even parity, 2 stop bits default → even parity, 1 stop bit	RS-485 parity and stop bits

Fun	Register Address	Data Length	Data Range	Details
0x03	0x0007	2 bytes	1 – 65535	SDI-12 ID
	0x000A	2 bytes	900 – 65535	Device type; LX-80 → 999, 998, 997
	0x000B	2 bytes	1 – 200 default: 20	Filter length - number of samples taken for the active filter
	0x000C	2 bytes	Reserved	
	0x000D	2 bytes	0 – device range default → 0	Active zone minimum in selected unit
	0x000E	2 bytes	0 – device range default → device range [unit]	Active zone maximum in selected unit
	0x000F	2 bytes	0 – device range default → 0	4-20 mA minimum value in selected unit
	0x0010	2 bytes	0 – device range default → device range [unit]	4-20 mA maximum value in selected unit
	0x0011	2 bytes	0 – device range [unit]	Level measurement offset
	0x0012	2 bytes	0 – 1000	IR filter constant $IR_{const} = \frac{value_{int}}{1000}$
	0x0015	2 bytes	2 printable characters	Serial number[0-1]
	0x0016	2 bytes	2 printable characters	Serial number[2-3]
	0x0017	2 bytes	2 printable characters	Serial number[4-5]
	0x0018	2 bytes	Firmware version	Current firmware version
	0x001A	2 bytes	-40 – 125	Temperature of electronics inside the case
	0x001B	2 bytes	0 – 80	Signal-to-Noise Ratio (SNR) indicator. A value of -99 dB indicates a serious problem with the device - contact Geolux support
	0x001C	2 bytes	0 → No filter 1 → IIR filter 2 → Moving average filter 3 → Median filter 4 → Standard deviation filter	The filter type used for statistical measurement postprocessing
	0x001D	2 bytes	0 → mm 1 → cm 2 → m 3 → ft 4 → in	Level unit

Fun	Register Address	Data Length	Data Range	Details
0x03	0x001E	2 bytes	0 – 1	Radar antenna status 0 – radar is not functional 1 – radar is functional
	0x0020	2 bytes	Current relative level	Current level measured depending on the sensor height; Calculated as sensor height – current level
	0x0021	2 bytes	Average relative level	Average level measured depending on the sensor height; Calculated as sensor height – average level
	0x0022	2 bytes	Sensor height	Sensor height above the riverbed
	0x0024	2 bytes	0 → Operating mode 1 → Standby mode	Power management
	0x0025	2 bytes	0 → SDI-12 mode 1 → Continuous scanning	Operation mode
	0x0028	2 bytes	0 → Maximum peak 1 → Last peak 2 → First peak	Peak detector type
	0x0029	2 bytes	Standard deviation	Standard deviation of measurement
	0x002A	2 bytes	-180 – +180	x-axis tilt angle, in degrees
	0x002B	2 bytes	-180 – +180	y-axis tilt angle, in degrees
	0x002D	2 bytes	0 → All sentences are sent 2 → $ANG is not sent	NMEA protocol flags
	0x002E	2 bytes	0 → Turned off 1 → Turned on	Force continuous calibration

Table 9. Writing Data to the Sensor

Fun	Register Address	Data Length	Data Range	Details
0x06	0x0003	2 bytes	0 → 9600 1 → 38400 2 → 57600 3 → 115200 4 → 1200 5 → 19200	RS-232 baud rate
	0x0004	2 bytes	1 – 247	Modbus ID
	0x0005	2 bytes	0 → 9600 1 → 38400 2 → 57600 3 → 115200 4 → 1200 5 → 19200	RS-485 baud rate (Modbus)
	0x0006	2 bytes	0 → no parity, 1 stop bit 1 → no parity, 2 stop bits 2 → odd parity, 1 stop bit 3 → odd parity, 2 stop bits 4 → even parity,1 stop bit 5 → even parity, 2 stop bits	RS-485 parity and stop bits
	0x0007	2 bytes	1 – 65535	SDI-12 ID
	0x000B	2 bytes	1 – 1000 default: 100	Filter length
	0x000C	2 bytes	Reserved	
	0x000D	2 bytes	0 – device range default → 0	Active zone minimum
	0x000E	2 bytes	0 – device rang default → device range	Active zone maximum
	0x000F	2 bytes	0 – device range default → 0	4-20 mA minimum value in selected unit
	0x0010	2 bytes	0 – device range default → device range	4-20 mA maximum value in selected unit
	0x0011	2 bytes	0 – device range	Level measurement offset
	0x0012	2 bytes	0 – 1	IR filter constant $IR_{const} = \frac{value_{int}}{1000}$

Fun	Register Address	Data Length	Data Range	Details
0x06	0x001C	2 bytes	0 → No filter 1 → IIR filter 2 → Moving average filter 3 → Median filter 4 → Standard deviation filter	The filter type used for statistical measurement postprocessing
	0x001D	2 bytes	0 → mm 1 → cm 2 → m 3 → ft 4 → in	Level unit
	0x0022	2 bytes	Sensor height	Sensor height above the riverbed
	0x0023	2 bytes	Staff gauge	Staff gauge measurement used to indirectly determine sensor height; Sensor height = staff gauge + current measured distance from sensor to water
	0x0024	2 bytes	0 → Operating mode 1 → Standby mode	Power management
	0x0025	2 bytes	0 → SDI-12 mode 1 → Continuous scanning	Operation mode
	0x0026		1	Recalibrate the instrument
	0x0027		0 – max. distance	Save background, up to the given distance
	0x0028	2 bytes	0 → Maximum peak 1 → Last peak 2 → First peak	Peak detector type
	0x002C	2 bytes	0x0FAC	Factory reset
	0x002D	2 bytes	0 → All sentences are sent 2 → $ANG is not sent	NMEA protocol flags
	0x002E	2 bytes	0 → Turned off 1 → Turned on	Force continuous calibration

7.3.1. Modbus Input Registers

Modbus input registers are read-only registers. By reading the Modbus input registers the user can view the device type and the firmware version, as well as real-time measurement values in 32-bit integer or 32-bit float format. Since the native Modbus registers are 16-bit registers, to store 32-bit values, two subsequent registers are used. In order to easily check the byte-order and word-order, two pairs of test registers with fixed constant values are provided. One register pair contains a fixed value of 1234567 in 32-bit integer format, and the other register pair contains a fixed value of -123.4567 in 32-bit float format.

Table 10 defines the data returned by the instrument when the master requests that the input register is read (Modbus function code 0x04). Rows highlighted in blue denote the values of interest, while the rows highlighted in green represent reserved registers which can be read but the returned value will always be equal to 0.

Table 10. Retrieving Data from Modbus Input Registers

Fun	Register Address	Data Length	Data Format	Details
0x04	0x0001	2 bytes	16-bit integer	Device type ID
	0x0002	2 bytes	16-bit integer	Firmware version
	0x0003	2 bytes		Reserved - always 0
	0x0004, 0x0005	2 bytes, 2 bytes	32-bit integer	32-bit integer control register pair containing a fixed value of 1234567
	0x0006, 0x0007	2 bytes, 2 bytes	32-bit float	32-bit float control register pair containing a fixed value of -123.4567
	0x0008 - 0x0009	2 bytes		Reserved - always 0
	0x0010, 0x0011	2 bytes, 2 bytes	32-bit float	Water level
	0x0012, 0x0013	2 bytes, 2 bytes	32-bit float	Distance to water
	0x0014 - 0x001B	2 bytes		Reserved - always 0
	0x001C, 0x001D	2 bytes, 2 bytes	32-bit float	Tilt angle, x-axis
	0x001E, 0x001F	2 bytes, 2 bytes	32-bit float	Tilt angle, y-axis
	0x0020 - 0x0021	2 bytes		Reserved - always 0
	0x0022, 0x0023	2 bytes, 2 bytes	32-bit float	SNR
	0x0024 - 0x0029	2 bytes		Reserved - always 0
	0x002A, 0x002B	2 bytes, 2 bytes	32-bit float	Internal temperature
	0x002C-0x007F	2 bytes		Reserved - always 0
	0x0080, 0x0081	2 bytes, 2 bytes	32-bit integer	Water level
	0x0082, 0x0083	2 bytes, 2 bytes	32-bit integer	Distance to water
	0x0084 - 0x008B	2 bytes		Reserved - always 0
	0x008C, 0x008D	2 bytes, 2 bytes	32-bit integer	Tilt angle, x-axis
	0x008E, 0x008F	2 bytes, 2 bytes	32-bit integer	Tilt angle, y-axis

Fun	Register Address	Data Length	Data Format	Details
0x04	0x0090 - 0x0091	2 bytes		Reserved - always 0
	0x0092, 0x0093	2 bytes, 2 bytes	32-bit integer	SNR
	0x0094 - 0x0099	2 bytes		Reserved - always 0
	0x009A, 0x009B	2 bytes, 2 bytes	32-bit integer	Internal temperature

7.4. SDI-12 Protocol

In all commands, 'a' represents the device address. Blue rows signal that parameters can be set using this command.
Supported SDI-12 commands are given in Table 10.

Table 10. SDI-12 commands

Name	Command	Response	Details
Address query	?!	a<CR><LF>	Device will identify using its SDI-12 address, default address is 0
Ping sensor	a!	a<CR><LF>	Device will respond if its address is 'a'
Address change	aAb!	b<CR><LF>	Device will respond if its address is 'a' with its new address 'b'
Send identification	aI!	a13GEOLUX LX-80 fffssssss<CR><LF>	a – address SDI-12 version – 1.3 vendor identification – GEOLUX sensor model – LX-80 sensor version – fff, where fff is firmware version ssssss - device serial number
Start verification	aV!	a00001<CR><LF>	One value is ready imminently
Send data	aD0!	a+d<CR><LF>	d – verification: 0->not ready , 1->ready
Additional data	aD1! .. aD9!	a0<CR><LF>	No values are returned for additional data.
Start measurement	aM!/aMC!	ammm8<CR><LF>	8 values are ready within mmm seconds
Send data	aD0!	a+f+f+d+d+d+d+f+f<CR><LF> a+f+f+d+d+d+d+f+f<CRC><CR><LF>	+f – measured relative level depending on sensor height +f – measured distance from sensor to water +d – measured temperature inside device +d – reserved for future use +d – measured tilt angle of device in x direction +d – measured tilt angle of device in y direction +f – SNR of latest measurement +f - standard deviation of the data in mm
Additional data	aD1! .. aD9!	a0<CR><LF> a0<CRC><CR><LF>	No values are returned for additional data.

Name	Command	Response	Details
Concurrent measurement	aC!/aCC!	ammm8<CR><LF>	8 values are ready within mmm seconds
Send data	aD0!	a+f+f+d+d+d+d+f+f<CR><LF> a+f+f+d+d+d+d+f+f<CRC><CR><LF>	+f – measured relative level depending on sensor height +f – measured distance from sensor to water +d – measured temperature inside device +d – measured water temperature (on request only) +d – measured tilt angle of device in x direction (on request only) +d – measured tilt angle of device in y direction (on request only) +f – SNR of latest measurement +f - standard deviation of the data in mm
Additional data	aD1! .. aD9!	a0<CR><LF> a0<CRC><CR><LF>	No values are returned for additional data.
Continuous measurement	aR0! .. aR9!	a<CR><LF> a<CRC><CR><LF>	The continuous mode is not supported
Get measurement unit for level	aXGLUN!	a+d<CR><LF>	+d – measurement unit for level 0 – mm 1 – cm 2 – m 3 – in 4 – ft
Set measurement unit for level	aXGLUN+d!	a+d<CR><LF>	+d – measurement unit for level 0 – mm 1 – cm 2 – m 3 – in 4 – ft
Get minimum active zone value	aXGDZ0!	a+f<CR><LF>	+f – active zone minimum value, sensor will not report measurement lower than this
Set minimum active zone value	aXGDZ0+f!	a+f<CR><LF>	+f – active zone minimum value, sensor will not report measurement lower than this
Get maximum active zone value	aXGDZ1!	a+f<CR><LF>	+f – active zone maximum value, sensor will not report measurement higher than this
Set maximum active zone value	aXGDZ1+f!	a+f<CR><LF>	+f – active zone maximum value, sensor will not report measurement higher than this

Name	Command	Response	Details
Get sensor height value	aXGSHR!	a+f<CR><LF>	+f – sensor height above riverbed
Set sensor height value	aXGSHR+f!	a+f<CR><LF>	+f – sensor height above riverbed
Set current staff gauge reading	aXGSGR+f!	a+f<CR><LF>	+f – current staff gauge reading, device will calculate sensor height above riverbed as: staff gauge reading + distance from sensor to water
Get average time in second for level	aXGLAV!	a+f<CR><LF>	+f – averaging time in seconds
Set average time in second for level	aXGLAV+f!	a+f<CR><LF>	+f – averaging time in seconds
Get filter type for data filtering	aXGLFT!	a+t<CR><LF>	+t – filter type, any of the following: 0 – no filter 1 – IIR filter 2 – Moving average 3 – Median 4 – Standard deviation
Set filter type for data filtering	aXGLFT+t!	a+t<CR><LF>	+t – filter type, any of the following: 0 – no filter 1 – IIR filter 2 – Moving average 3 – Median 4 – Standard deviation
Get IIR filter constant	aXGLIR!	a+c<CR><LF>	+c – IIR filter constant used in IIR filter
Set IIR filter constant	aXGLIR+c!	a+c<CR><LF>	+c – IIR filter constant used in IIR filter, recommended range is from +0.0 to +1.0
Get peak detector type	aXGPDT!	a+t<CR><LF>	+t – identifies the peak detector type, can be any of the following: 0 – report the distance to the maximum peak which corresponds to the maximum radar signal reflection 1 - report the last peak which corresponds to the furthest reflection from the radar; this may include multipath reflections in typical cases and should be avoided

Name	Command	Response	Details
Set peak detector type	aXGPDT+t!	a+t<CR><LF>	+t – identifies the peak detector type, can be any of the following: 0 – report the distance to the maximum peak which corresponds to the maximum radar signal reflection 1 - report the last peak which corresponds to the furthest reflection from the radar; this may include multipath reflections in typical cases and should be avoided
Save background signal level	aXGBKG+d!	a+d<CR><LF>	Stores the radar echo curve signature from zero distance up to defined distance d. The stored echo curve is used as a reference signal background level, and only reflections stronger than the saved level will be used when searching for the water level. To clear this setting, send this command with a parameter d set to 0 (zero). +d – distance in currently used units
Wake up from sleep mode	aXGLWU!	a+0<CR><LF>	When the instrument is configured to operate in SDI-12 mode, it goes to sleep until SDI-12 measure command (xM!) is issued. Connection to the instrument through RS-232 and RS-485 interfaces is not possible while the instrument is in the sleep mode. To facilitate connecting to the instrument from the PC application, after issuing this command, the instrument will wake up and remain in active state for 60 seconds. During that time, a connection over serial cable can be established using Geolux Instrument Configurator PC application. If the connection is established within this 60-second period, the instrument will remain in the active state as long as the PC application is connected to the instrument.

AKRIBIS · www.akribis.info · contacto@akribis.info

Name	Command	Response	Details
Clear the stored radar calibration, perform self-calibration, and store new calibration parameters.	aXGCLR!	a+1<CR><LF>	Forces the instrument to clear the stored radar calibration, and to perform the self-calibration again. In majority of cases the factory calibration will be valid through the whole lifetime of the instrument, and there will be no need to redo the self-calibration.
Perform factory reset	aXGFAC!	a+1<CR><LF>	Revert the device to default factory settings. To fully revert the device to factory settings, the device must be power-cycled after the factory reset command is executed.
Get NMEA protocol flags value	aXGNPF!	a+d<CR><LF>	+d – NMEA protocol flag value 0 – all sentences are sent 2 – $ANG is not sent
Set NMEA protocol flags value	aXGNPF+d!	a+d<CR><LF>	+d – NMEA protocol flag value 0 – all sentences are sent 2 – $ANG is not sent
Get force continuous calibration value	aXGFCL!	a+d<CR><LF>	+d – force continuous calibration value 0 – turned off 1 – turned on
Set force continuous calibration value	aXGFCL+d!	a+d<CR><LF>	+d – force continuous calibration value 0 – turned off 1 – turned on

Device supports all other commands required by SDI-12 v1.3 and will respond to them but all relevant data can be acquired using the commands from the table above.

8 Geolux Instrument Configurator

Geolux provides a user-friendly PC application, Geolux Instrument Configurator, for setting up the level meter operating parameters. Additionally, Geolux Instrument Configurator displays current level measurements.

When started, the Geolux Instrument Configurator displays its main window. Initially, no level data is displayed, as the connection to the instrument is not established. Picture 6. shows the Geolux Instrument Configurator main window on start-up.

Picture 6. Geolux Instrument Configurator Main Window

To connect the Geolux Instrument Configurator with the instrument, connect your PC to the radar using a serial cable connection. Then, click the *Connect* button in the upper left corner and select *Level meter* from the window which appears. In the next window, select the appropriate COM port and interface. If RS-485 interface is selected, additionally select the baud rate, parity, stop bits and the Modbus ID. In case of multiple devices connected on a single RS-485 bus, make sure that each device has a unique Modbus ID. When the *Connect* button is clicked, Geolux Instrument Configurator will try to establish a data link between your PC and the level meter. If the connection is successful, the device will appear under *Connected devices* and level measurements will be displayed in the *Data* tab as shown in Picture 7.

A detailed description of the displayed parameters is available when hovering the mouse over the icon of a specific parameter. Initially, only the most important parameters are displayed while the rest are hidden. By clicking on the button with arrows next to the displayed parameters, the user can view all the data received from the device. Clicking the *Start recording data* starts recording the most important data which is initially displayed and saves it to a .csv file.

If RS-232 interface is selected and too many checksum errors are detected, the interface, COM port and baud rate text on the device icon under *Connected devices* will turn red indicating a communication error.

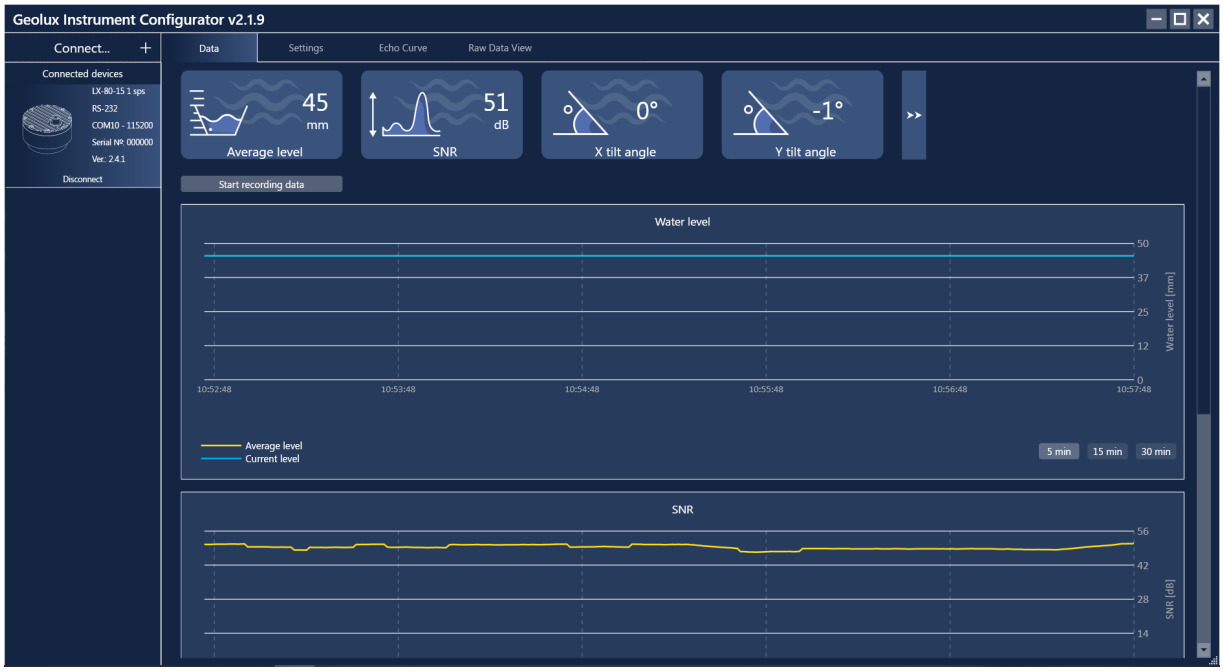

Picture 7. Geolux Instrument Configurator – Data View

Clicking the *Settings* button enables the user to configure the instrument or upgrade the device to a newer firmware version. Instrument settings are sorted into 3 groups: *Interfaces*, *Processing* and *Measurement*, as shown in Picture 8. By clicking the name of a specific group, all the settings which belong to that group can be viewed and changed. The following settings are displayed:

Interfaces
RS-232 baud rate
RS-232 settings
RS-485 baud rate
Modbus ID
Modbus parity
Modbus stop bits
SDI-12 ID
4-20 mA min.
4-20 mA max.

Processing
Filter type
Filter length
IIR constant
Peak detector type

Measurement
Level unit
Level offset
Active zone min.
Active zone max.
Sensor height
Power management
Operation mode
Continuous calibration

A detailed description of the selected setting appears on the right side of the window when the user clicks on, or begins to change, a specific setting. When a setting is changed, the *Set* button will appear next to the setting. By clicking the *Set* button, the user confirms the change and the new setting is saved.

By clicking the *Enter staff gauge* button on the bottom of the *Settings* tab, the user can enter the staff gauge reading if a staff gauge is present on the site. The *Update firmware* button allows the user to update the firmware of the device. The *Export parameters* button exports the current settings to .txt file. If needed, the user can recalibrate the radar by clicking the *Recalibrate radar* button, while the *Factory reset* button reverts all the settings to their default values.

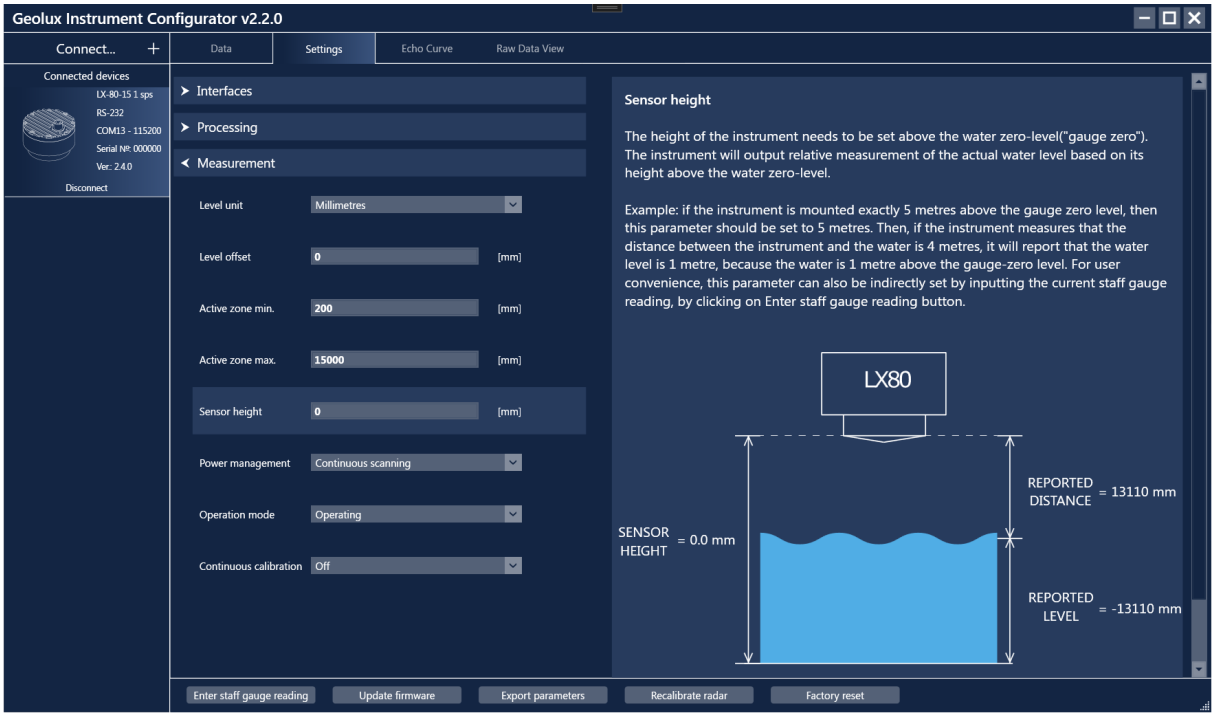

Picture 8. Geolux Instrument Configurator – Settings View

Geolux Instrument Configurator also enables echo curve acquisition. Navigating to the *Echo Curve* tab and clicking the *Load echo curve* button loads the current echo curve, as shown in Picture 9. The echo curve plot shows the current echo curve in yellow, as well as the background echo curve in blue. The user can choose to clear the background by clicking the *Clear background* button or set the background echo curve to a desired distance by clicking the *Set background* button. After setting or clearing the background, echo curves should be reloaded by clicking the *Reload echo curve* button. Echo curves can be saved to a .csv file by clicking on *Save to CSV...* button.

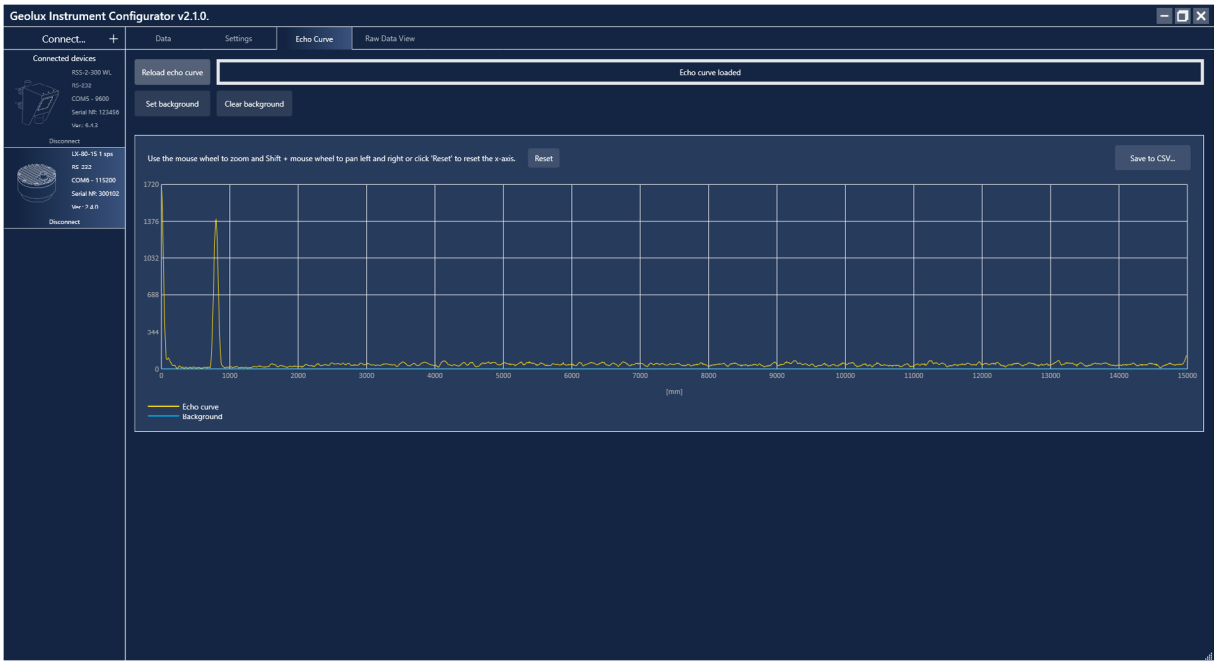

Picture 9. Geolux Instrument Configurator - Echo Curve View

Navigating to the *Raw Data View* tab and clicking the *Start* button enables the user to view the raw data which is being transmitted by the device. Clicking the *Stop* button stops the acquisition of the raw data, while clicking the *Clear* button clears the previously acquired data. The *Raw Data View* tab includes a command line at the bottom so the user can manually send commands to the device.

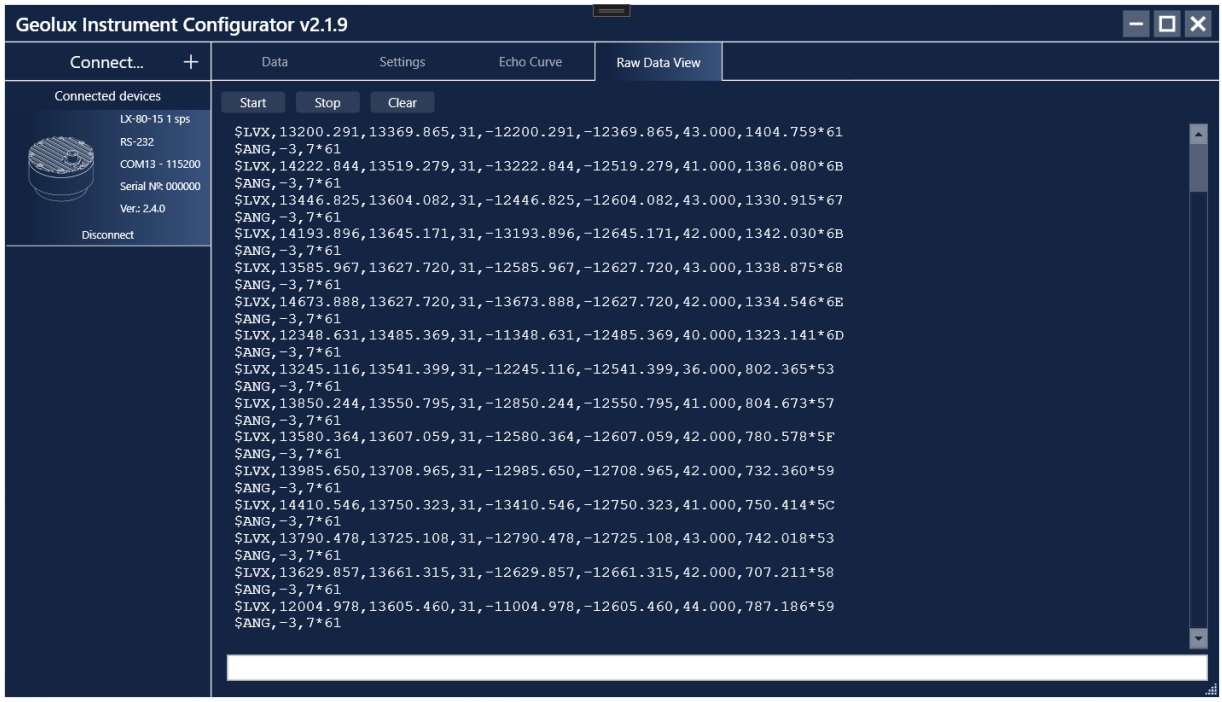

Picture 10. Geolux Instrument Configurator - Raw Data View

9 Troubleshooting

Problem	Possible solutions
The instrument does not connect to the PC application over RS-232 connection.	**1. Make sure that the cable is properly connected to the instrument** Check that the cable M12 circular connector is firmly connected and screwed to the instrument. It is not sufficient to simply attach the cable connector to the instrument connector, the cable connector must be screwed into the instrument connector. **2. Check power supply** Make sure that the power is being supplied to the instrument. A direct-current voltage, between 9 and 27 Volts must be connected to brown (+) and white (-) wires of the instrument cable. The power supply must be able to deliver at least 500 mA of current. **3. Check RS-232 connector** The yellow, green and grey wires from the instrument cable must be properly connected to the serial port on the computer. Make sure that the grey wire (signal ground) is connected – the RS-232 connection will not work if the signal ground is not connected. Also, make sure that the yellow (device Rx) and green (device Tx) are properly connected. If you are using a standard DB9 type connector on the PC computer, the wires should be connected like in the following diagram: 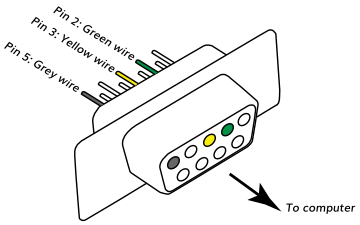 **4. Make sure that you are using the correct COM port** If there are multiple COM ports available on your computer, make sure that you are selecting the correct COM port in the PC application. If you are not certain which COM port number is assigned to the COM port that is being used to establish a connection with the instrument, try setting up the connection with each COM port available in the system, until the connection is established. 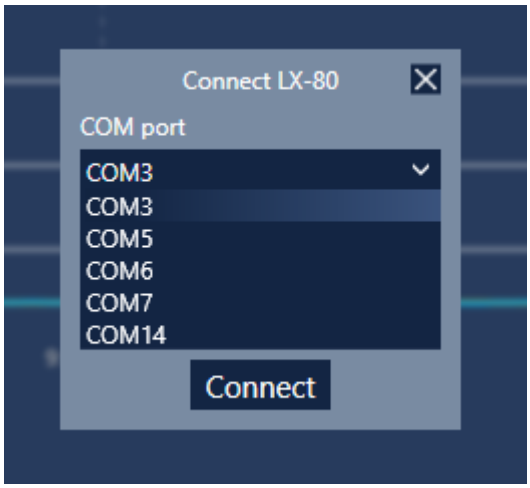

	5. Check that the device is not operating in SDI-12 mode The instrument can be configured to operate in SDI-12 mode. In this mode the instrument enters low power mode unless it receives an SDI-12 command over the SDI-12 interface. While the device is in SDI-12 mode, it will not respond to commands over RS-232 connection. To establish a RS-232 connection with the device which operates in SDI-12 mode, power off the device and then power it back on. After power-up there is a one minute period in which the device will not enter the SDI-12 low power mode and it will be possible to establish a connection over the RS-232 line. If the connection is established within 60 seconds after power-up, and as long as the Geolux Instrument Configurator application is connected to the sensor, it will remain in operating mode. To change between regular operating mode (*Continuous scanning*) and SDI-12 mode (*SDI-12 automatic sleep*), change the *Power management* parameter in the *Settings* tab. 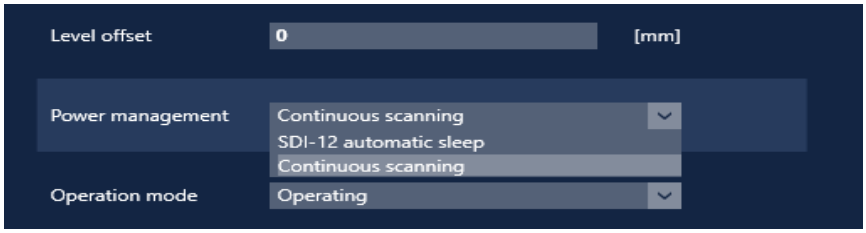 **6. Make sure that the COM port is not already open** Only one application may use a single COM port in the system. Make sure that no other open application uses the same COM port that you are trying to open. **7. Try restarting the application and/or the computer** Close and reopen the configurator application and try to establish the connection again. Restart your computer and try to establish the connection to the instrument again.
The instrument does not respond over Modbus (RS-485) interface.	**1. Make sure that the cable is properly connected to the instrument** Check that the cable M12 circular connector is firmly connected and screwed to the instrument. It is not sufficient to simply attach the cable connector to the instrument connector, the cable connector must be screwed into the instrument connector. **2. Check power supply** Make sure that the power is being supplied to the instrument. A direct-current voltage, between 9 and 27 Volts must be connected to brown (+) and white (-) wires of the instrument cable. The power supply must be able to deliver at least 500 mA of current. **3. Check RS-485 connector** Make sure that the RS-485 lines on the instrument cable are properly connected to the RS-485 connector. The dark red wire should be connected to D+ line, and the orange line should be connected to D- line. Make sure that the D+ and D- lines are not swapped. Make sure that you have correctly identified and connected the dark red (magenta) wire, as there is also another bright red wire that is used to provide output power for 4-20 mA output. It is possible to misidentify the wire and to connect the bright red wire to D+ instead of dark red wire.

4. Check that you are using the correct slave device ID

The default Modbus device ID is 1. The Modbus device ID can be changed by connecting the instrument to the PC application (over RS-232 connection).

Connect the instrument to the PC using RS-232 connection. Open the Geolux Instrument Configurator application and establish a connection between the instrument and the PC. Then check the parameter and make sure that it is the same as the slave device ID used in issued Modbus requests.

5. Make sure that there are no two devices on the bus with the same Device ID.

Modbus allows to have multiple devices connected on the same bus simultaneously. Each device must have a unique slave device ID assigned, so that the bus master can distinguish between the devices. If two or more devices are assigned the same slave device ID, a bus conflict will happen and prohibit the master to correctly communicate with the slave devices. To resolve this problem, change the instrument's slave device ID to a unique number through the Geolux Instrument Configurator PC application.

6. Check that you are using the correct Modbus connection parameters (baud rate, parity, stop bits)

The default Modbus connection parameters are 9600 bps, even parity, 1 stop bit. These parameters can be changed by connecting the instrument to the PC application (over RS-232 connection).

Connect the instrument to the PC using RS-232 connection. Open the Geolux Instrument Configurator application and establish a connection between the instrument and the PC. Then check and verify that all Modbus connection parameters are correct.

	7. Check that the device is not operating in SDI-12 mode The instrument can be configured to operate in SDI-12 mode. In this mode the instrument enters low power mode unless it receives an SDI-12 command over SDI-12 interface. While the device is in SDI-12 mode, it will not respond to commands over RS-232 and RS-485 (Modbus) connections. To change the instrument's operating mode from SDI-12 mode to normal mode, first you need to connect the Geolux Instrument Configurator to the device. To establish a RS-232 connection with the device which operates in SDI-12 mode, power off the device and then power it back on. After power-up, there is a one minute period in which the device will not enter SDI-12 low power mode and it will be possible to establish a connection over the RS-232 line. If the connection is established within 60 seconds and as long as the Geolux Instrument Configurator application is connected to the sensor, it will remain in operating mode. To change between regular operating mode (*Continuous scanning*) and SDI-12 mode (*SDI-12 automatic sleep*), change the *Power management* parameter in the *Settings* tab. 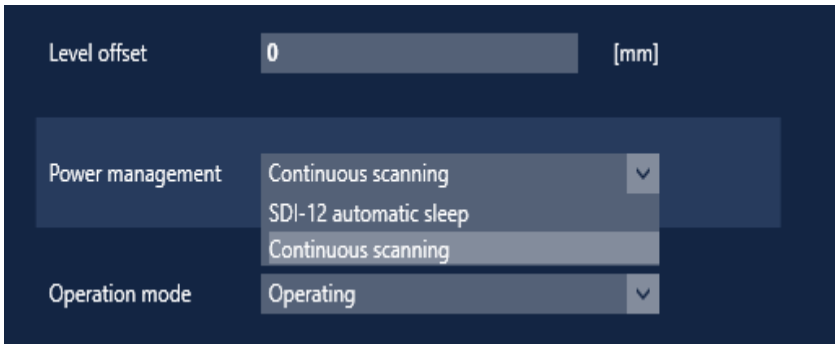
The instrument does not respond over SDI-12 interface.	**1. Make sure that the cable is connected properly to the instrument** Check that the cable M12 circular connector is firmly connected and screwed to the instrument. It is not sufficient to simply attach the cable connector to the instrument connector, the cable connector must be screwed into the instrument connector. **2. Check power supply** Make sure that the power is being supplied to the instrument. A direct-current voltage, between 9 and 27 Volts must be connected to brown (+) and white (-) wires of the instrument cable. The power supply must be able to deliver at least 500 mA of current. **3. Check SDI-12 connection** Check and verify that the black wire from the instrument cable is connected to the SDI-12 data line, and that the grey wire from the instrument cable is connected to the ground (GND) line on the SDI-12 data logger. It is important that both the data line and the signal ground lines are connected.

AKRIBIS · www.akribis.info · contacto@akribis.info

	4. Check that you are using the correct SDI-12 device ID The default SDI-12 device ID is A. The device ID can be changed by connecting the instrument to the PC application (over RS-232 connection). Connect the instrument to the PC using RS-232 connection. Open the Geolux Instrument Configurator application and establish a connection between the instrument and the PC. Then check the *SDI-12 ID* parameter and make sure that it is the same as the device ID used in issued SDI-12 requests. 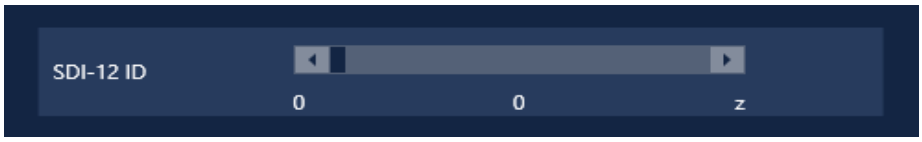 **5. Make sure that there are no devices with the same device ID connected on the bus.** SDI-12 allows to have multiple devices connected on the same bus simultaneously. Each device must have a unique device ID assigned, so that the SDI-12 master device (datalogger) can distinguish between the devices. If two or more devices are assigned the same device ID, a bus conflict will happen and prohibit the master to correctly communicate with the slave devices. To resolve this problem, change the instrument's SDI-12 device ID to a unique value through the Geolux Instrument Configurator PC application.
The instrument consumes too much power while operating in SDI-12 mode (it does not reduce power between two SDI-12 Measure! Commands)	**1. Switch the instrument from operating mode to standby mode.** Establish a connection to the device over RS-232 connection from the Geolux Instrument Configurator PC application. Change the Operation mode parameter from Operating mode to Standby mode. 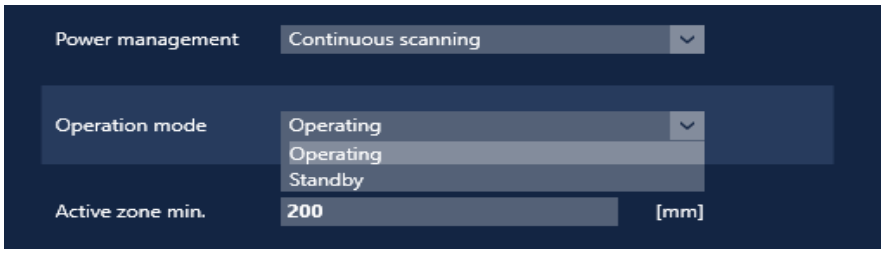
The 4-20 mA output is not correct	**1. Make sure that the cable is properly connected to the instrument** Check that the cable M12 circular connector is firmly connected and screwed to the instrument. It is not sufficient to simply attach the cable connector to the instrument connector, the cable connector must be screwed into the instrument connector. **2. Check power supply** Make sure that the power is being supplied to the instrument. A direct-current voltage, between 9 and 27 Volts must be connected to brown (+) and white (-) wires of the instrument cable. The power supply must be able to deliver at least 500 mA of current.

	3. Make sure that the wires from the cable are properly connected First, identify the version of the device that you are using by checking the serial number on the product label. The type is identified by looking at the first digit of the serial number following model designation. For example, if the full serial number is LX15-423112, then the first digit is 4. If the full serial number is LX8-234567, then the first digit is 2. If the first digit is 4, then make sure that the birght red wire is connected to the LOOP+ input on the PLC, and the purple wire to LOOP- input on the PLC. If you are using an amp-meter, in that case connect the bright red wire to positive (+) terminal on the power supply, and connect one input of the amp-meter to the purple wire and the other input of the amp-meter to the negative (-) terminal on the power supply. In that case, the current-meter loop should be separate from the instrumetn power supply - you cannot use the same power supply for powering the instrument and for the current measurement loop. If the first digit is less than 4, then the bright red wire from the instrument cable must be connected to the positive (+) input, and the purple wire (4-20 mA sink output) must be connected to the negative (–) input of the 4-20 mA interface. Make sure that the correct bright red wire is used for connection, and not the dark red (magenta) wire. **4. Check the instrument configuration parameters related to 4-20 mA output** Connect the instrument over RS-232 connection to the Geolux Instrument Configurator application. Check the parameters related to 4-20 mA: *4-20 mA min.* and *4-20 mA max*. Properly configure these parameters.
The instrument is operating, but: -it does not report distance/level measurement, -it reports 0 (zero) distance, -it reports incorrect measurement	**1. Check that the instrument is positioned properly** Make sure that the instrument is level and pointing towards the water surface at the right angle (the radar beam should be perpendicular to the water surface). Both tilt angles should be zero degrees, or not bigger than 2° in any direction. 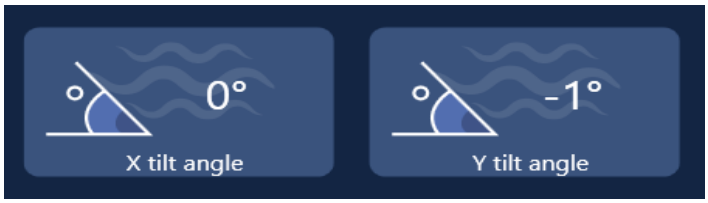 **2. Check that there are no obstructions between the instrument and the water surface** There should be no obstructions between the instrument and the water surface, so that the radar waves can freely travel from the instrument's antenna to the water surface and back. Objects such as rocks, construction elements (metal, concrete, etc.), vegetation (tree branches, water vegetation, etc.) can all affect the instrument's reading.

	If there are some minimal obstructions far away from the water surface, and the radar is reporting the distance to these objects instead of the distance to the water surface, you can adjust the active zone of the instrument. The active zone limits the minimum and maximum range within which the instrument searches for the water surface. For example, if there is an obstruction 1 meter away from the instrument, and the instrument reports a distance of 1 meter, but the water surface is expected to be between 3 and 5 meters, you can adjust the active zone to be within 3 and 5 meters, and then the instrument will discard all measurements outside of that range. 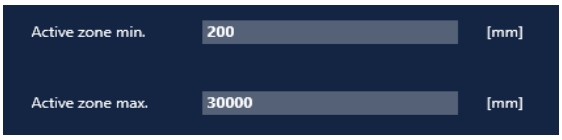 **3. Check that the distance between the instrument and the water surface is within the instrument's operating range.** Use a tape measure or a similar tool to measure the distance between the instrument's antenna and the water surface. If the distance to the water surface is greater than the instrument's operational range, the instrument will not be able to measure the distance and the water level. **4. Check that the distance between the instrument and the water surface is within configured active zone.** Connect the instrument to the Geolux Instrument Configurator PC application over RS-232 connection. Check the active zone parameters – if the distance to the actual water surface is outside of the predefined active zone, the instrument will not be able to report the correct distance. Modify the active zone parameters so that the actual distance to the water surface is within the active zone. **5. Update device firmware** Connect the instrument to the Geolux Instrument Configurator PC application over RS-232 connection. Go to *Settings* and click the *Update firmware* button to update the device firmware. **6. Re-calibrate the device** If none of the above mentioned suggestions have helped resolve the problem, perform device re-calibration. The instrument has the capability to perform self-calibration. Normally there is no need to re-calibrate the instrument after its initial calibration in the factory, but in rare cases, re-calibration can resolve the operating problems of the device. To re-calibrate the instrument, connect it over RS-232 to the Geolux Instrument Configurator PC application, and then, under *Settings*, click on the *Recalibrate radar* button.
Firmware upgrade has failed, or firmware upgrade gets stuck on "Erasing flash", or there is no reading after performing the firmware upgrade.	**1. Repeat the firmware upgrade procedure** If the firmware upgrade fails, gets stuck on *Erasing flash*, or if after the firmware upgrade it is not possible to get any readings from the instrument, power off the device and close the Geolux Instrument Configurator application. After that, power the instrument back on, re-establish the RS-232 connection to the Geolux instrument Configurator PC application, and perform the firmware upgrade procedure again.

10 Appendix A – Mechanical Assembly

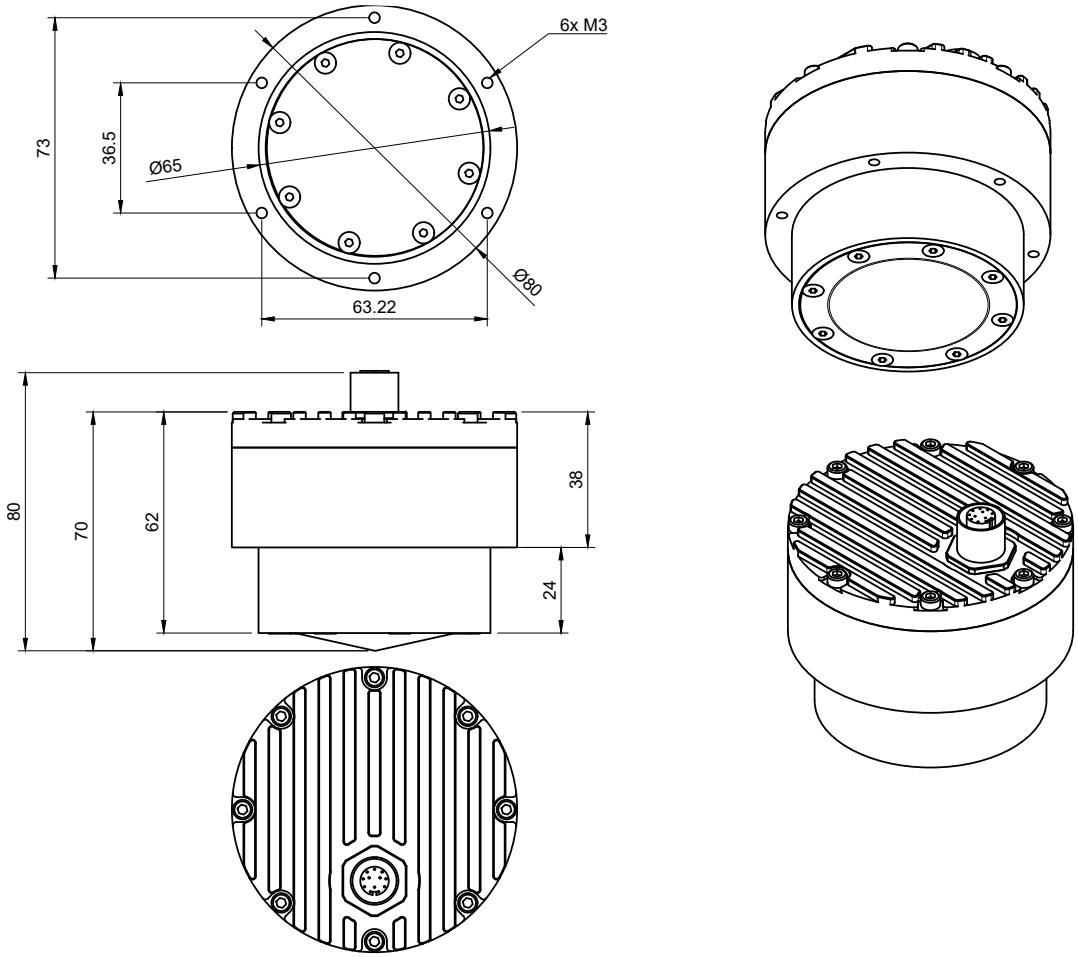

2023.