USER GUIDE

KIT 195

Radwag

Distributed by AKRIBIS

User manual

IMMU-53-03-05-26-EN

KIT

Density Determination

XA Analytical Balances
AS Analytical Balances
PS Precision Balances

radwag.com
Scan the QR code to view additional scientific material that may be of interest to you.
There you will find more useful information in an accessible format!

AKRIBIS www.akribis.info contacto@akribis.info

If you are reading this, it means that you are bound to achieve success. You have purchased a device that was designed and manufactured to give you years of service.
Congratulations and thank you for selecting RADWAG product.

MAY 2026

TABLE OF CONTENTS

1. GENERAL INFORMATION 3
2. DENSITY DETERMINATION PRINCIPLE 4
2.1. Terms 4
2.2. Determination Errors Source 5
3. MANUFACTURER'S RECOMMENDATIONS 6
4. KIT 85 – SOLIDS AND LIQUIDS DENSITY DETERMINATION KIT – XA, AS SERIES BALANCES....8
5. KIT 128 – SOLIDS AND LIQUIDS DENSITY DETERMINATION KIT – PS SERIES BALANCES....9
6. KIT 195 – SOLIDS AND LIQUIDS DENSITY DETERMINATION KIT – PS SERIES BALANCES....10
7. KIT 195.M – SOLIDS AND LIQUIDS DENSITY DETERMINATION KIT – PS.M BALANCES 11
8. DENSITY DETERMINATION KIT INSTALLATION – XA SERIES BALANCE....12
9. DENSITY DETERMINATION KIT INSTALLATION – AS SERIES BALANCE....13
10. DENSITY DETERMINATION KIT INSTALLATION – PS SERIES BALANCE: 128x128mm weighing pan14
11. DENSITY DETERMINATION KIT INSTALLATION – PS SERIES BALANCE: 195x195mm weighing pan15
12. DENSITY DETERMINATION FOR PS SERIES BALANCES 16
12.1. Solids Density Determination 16
12.2. Density Measurement of Solids of Density Lower Than Density of Liquid 18
12.3. Liquids Density Determination....19
13. DENSITY DETERMINATION FOR AS AND XA SERIES BALANCES 22
13.1. Solids Density Determination 22
13.2. Density Measurement of Solids of Density Lower Than Density of Liquid 23
13.3. Density Measurement of Granulates....24
13.4. Liquid Density Determination 25
14. TABELES....26
14.1. Table 1. Relation between distilled water density and temperature 26
14.2. Table 2. Relation between water density and temperature 26
14.3. Table 3. Selected Substances Density 27
14.4. Table 4. Selected Liquids Density at 20 °C....27

1. GENERAL INFORMATION

Process of solids and liquids density determination is carried out on a regular basis in majority of laboratories. Considering this fact, RADWAG company has designed software improving density measurement operation.

Traditional method of density measurement requires an operator to carry out numerous laborious measurements and toilsome calculations.
In effect the result of density measurement can be burdened with calculation and statistical errors, while time required to determine density of solids or liquids is rather long.

With use of balances featuring function of density measurement, the procedure can be simplified and quickened. Since all calculations are performed by the software, it takes much less time to receive the final result. Your activity is limited to manual processes, such as:

- operation of a balance's keyboard,
- loading a sample onto weighing pans,
- hanging a sinker.

The density of solids and liquids can be determined using a dedicated density determination kit which is a part of additional equipment intended for laboratory balances. Density determination software guarantees:

- simplicity of operation (all operations are presented on the display),
- reliability (all calculations are carried out automatically),
- fast data processing (the result is obtained right after determining sample mass in water or sinker mass in liquid),
- reliable data processing (before each measurement the indication zeroed thus measurement results are reliable and indicate actual mass),
- printing results on any printer or sending them to a computer for further processing.

2. DENSITY DETERMINATION PRINCIPLE

2.1. Terms

- **Density**
  Density refers to a ratio between sample mass and its volume.

$$\rho = \frac{M}{V}\ [g/cm^3]$$

ρ - sample density
M - sample mass
V - sample volume

- **Relative gravity**
  Relative gravity refers to the ratio of sample density to pure water density (with the same volume as that of the sample) at 4°C, and at pressure 1013,25 hPa.

$$S = \frac{M}{V \times \rho_n}$$

S - relative gravity
M - sample mass
V - sample volume
ρ_n - density of water at 4^oC, at pressure 1013,25 hPa

- **Archimedes' Principle**
  A body immersed in a liquid undergoes an apparent loss in weight equal to the weight of the fluid it displaces.

- **Density of solid**
  The density of solid can be obtained using the following formula:

$$\rho = \frac{A}{A - B}\rho_o$$

ρ - sample density
A - sample mass in the air
B - sample mass in liquid
ρ_o - density of liquid

- **Density of liquid**

  The density of liquid can be obtained using the following formula:

$$\rho = \frac{A - B}{V} + d$$

ρ - density of liquid
A - sinker mass in the air
B - sinker mass in liquid
V - sinker's volume
d - density of air (max 0,001 g/cm^3)

2.2. Determination Errors Source

The software calculates and indicates on a digital display the result of density determination with accuracy of 0,001 g/cm^3. It shall be remembered that the measurement result can be burdened with additional errors.

- **Error of mass measurement**

  Sample mass (in the air and in the water) is obtained using a balance with accuracy 0,001g.

- **Air Buoyancy**

  The air buoyancy is determined using the following formula:

$$d = \frac{0{,}0012932}{1 + 0{,}0036728 \times t} \times \frac{p}{1013{,}25}$$

t - air temperature [°C]
p - air pressure

- **Liquid temperature**

  When determining density of solids, the density of liquid in which the measurement is carried out changes along with its temperature.
  The density of H_2O and C_2H_5OH is taken from balance-stored tables, with reference to temperature of liquid measured directly before density determination.
  Density of liquid other than H_2O and C_2H_5OH is entered to balance memory right before density determination.

  CAUTION!
  Corrections of density of distilled water and alcohol are noted by the balance software automatically.

- **Sinker volume**

  It is given on sinker's hanger and it is expressed in cm^3.

- **Surface tension**
  During solid density determination process the weighing pan is subjected to a force (surface tension) which interacts between a flexible connector and liquid surface.
  During density measurement the connector with 0,2 mm in diameter creates a force of approximately 1 mg. The force practically does not influence the measurement result.

- **Air bubbles**
  The buoyancy of an air bubble of 1 mm in diameter is about 0,5 mg.
  Tack of air bubbles depends on the sample's shape and type of material. Air bubbles tack to surfaces covered with grease/oil much easier.

3. MANUFACTURER'S RECOMMENDATIONS

1. Density of solids should be determined on the basis of a few measurements
2. Tested sample has to be degreased.
3. In case of objects of oval shape, which are difficult to hold using tweezers, cut a notch for secure grasp of the sample.
4. Sample surface must not be porous. It favours sticking of air bubbles.
5. Before each successive density measurement dry a sample. Unless the sample is dried, its mass may vary while weighing in the air for successive measurements, and density determination result is burdened with an error.
6. Tested material should be loaded gently on density kit's pans, avoiding shocks.
7. Liquid level has to provide that the arm of the lower weighing pan is fully immersed.
8. Sample size should match the size of the density kit's weighing pans.
9. Mass of a sample used for testing should not exceed 5 g.
10. Water remaining on the tweezers while carrying a sample onto the upper pan of the density kit may be a factor disturbing the measurements. Therefore after removing the sample from liquid remember to dry the tweezers.
11. Liquid density should be determined on the basis of a few measurements.
12. Tested liquid should be stabilized for its temperature.
13. The sinker has to be degreased. It its surface is covered with grease it may easily tack air bubbles.

14. Before measurement, carefully wash the beaker.
15. Liquid level should ensure sinker's immersion by 10-15 mm below liquid surface.
16. Hang the sinker on the hanger gently, avoiding shocks.
17. Tested liquid may be a factor disturbing the measurement as it tacks to the sinker. In such case sinker's mass measured in the air may vary in the successive measuring processes. It is necessary to dry the sinker after each weighing in liquid.

CAUTION!

- *Avoid drying the sinker using cloths made of plastics, as they may create electrostatic charges. It is recommended to dampen the cloth using antistatic liquid or antistatic foam.*
- *Damage of the glass sinker that occurred in the course of operation (breaks, bruises) is not repaired under warranty.*

4. KIT 85 – SOLIDS AND LIQUIDS DENSITY DETERMINATION KIT – XA, AS SERIES BALANCES

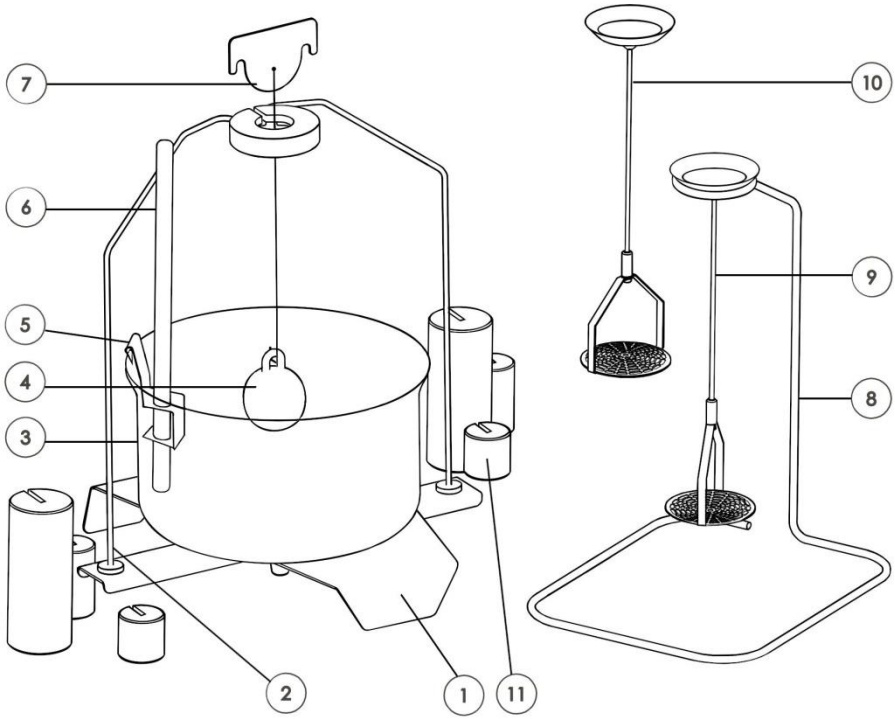

Components list:

1	Beaker base	**7**	Hanger
2	Stand	**8**	Additional stand for a set of pans or a sinker
3	Beaker	**9**	Weighing pan for solids density determination
4	Sinker	**10**	Weighing pan for density determination of solids with density lower that density of water
5	Thermometer holder		
6	Thermometer	**11**	Weights

CAUTION!

- *Components of density determination kit shall be stored in a respective box.*
- *Weighing pans and sinker shall not be put directly on a table, this might cause their damage.*
- *Weighing pans and sinker, if not operated, shall be put on an additional stand.*

5. KIT 128 – SOLIDS AND LIQUIDS DENSITY DETERMINATION KIT – PS SERIES BALANCES

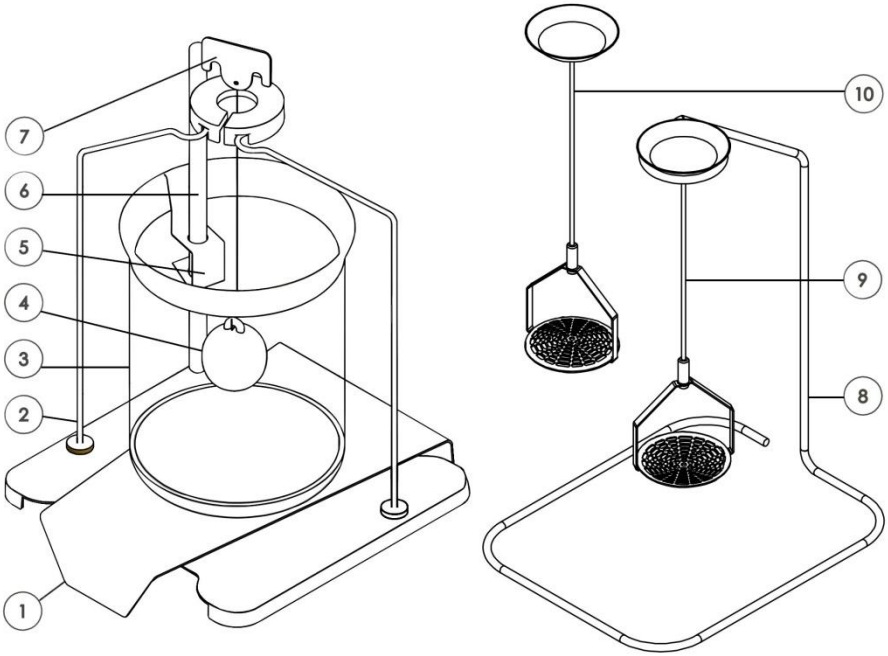

Components list:

1	Beaker base	**6**	Thermometer
2	Stand	**7**	Hanger
3	Beaker	**8**	Additional stand for a set of pans or a sinker
4	Sinker	**9**	Weighing pan for solids density determination
5	Thermometer holder	**10**	Weighing pan for density determination of solids with density lower that density of water

CAUTION!

- *Components of density determination kit shall be stored in a respective box.*
- *Weighing pans and sinker shall not be put directly on a table, this might cause their damage.*
- *Weighing pans and sinker, if not operated, shall be put on an additional stand.*

6. KIT 195 – SOLIDS AND LIQUIDS DENSITY DETERMINATION KIT – PS SERIES BALANCES

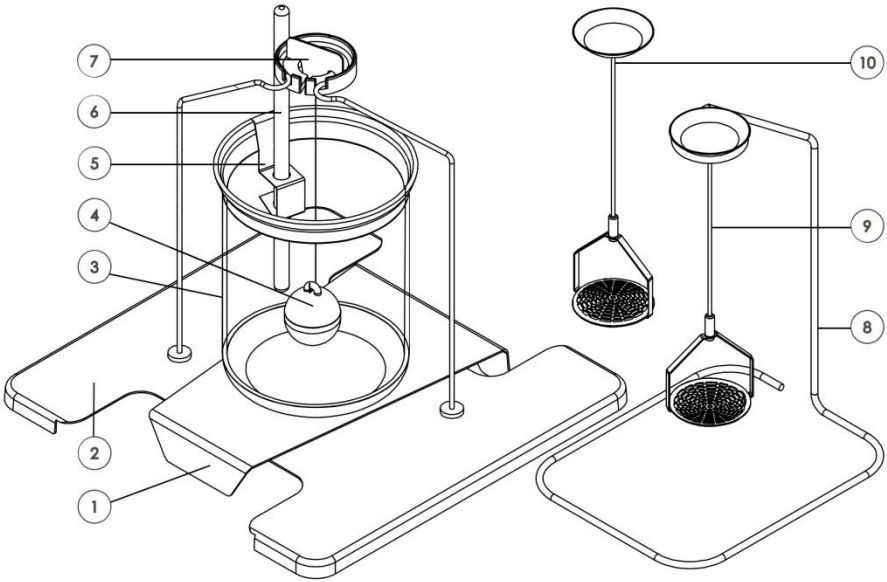

Components list:

1	Beaker base	**6**	Thermometer
2	Stand	**7**	Hanger
3	Beaker	**8**	Additional stand for a set of pans or a sinker
4	Sinker	**9**	Weighing pan for solids density determination
5	Thermometer holder	**10**	Weighing pan for density determination of solids with density lower that density of water

CAUTION!

- *Components of density determination kit shall be stored in a respective box.*
- *Weighing pans and sinker shall not be put directly on a table, this might cause their damage.*
- *Weighing pans and sinker, if not operated, shall be put on an additional stand.*

7. KIT 195.M – SOLIDS AND LIQUIDS DENSITY DETERMINATION KIT – PS.M BALANCES

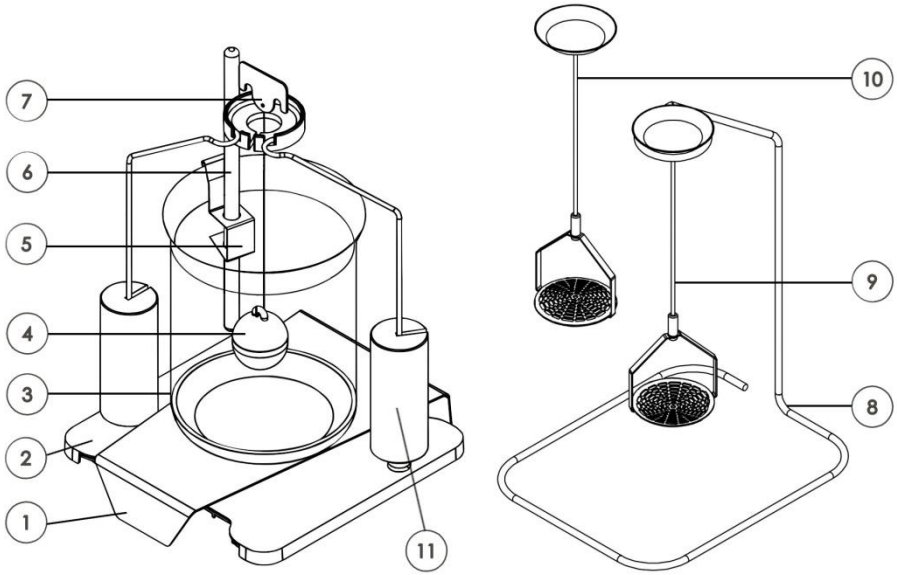

Components list:

1	Beaker base	**7**	Hanger
2	Stand	**8**	Additional stand for a set of pans or a sinker
3	Beaker	**9**	Weighing pan for solids density determination
4	Sinker	**10**	Weighing pan for density determination of solids with density lower that density of water
5	Thermometer holder		
6	Thermometer	**11**	Weights (for use with 2100 and 3500 load capacity)

CAUTION!

- *Components of density determination kit shall be stored in a respective box.*
- *Weighing pans and sinker shall not be put directly on a table, this might cause their damage.*
- *Weighing pans and sinker, if not operated, shall be put on an additional stand.*

8. DENSITY DETERMINATION KIT INSTALLATION – XA SERIES BALANCE

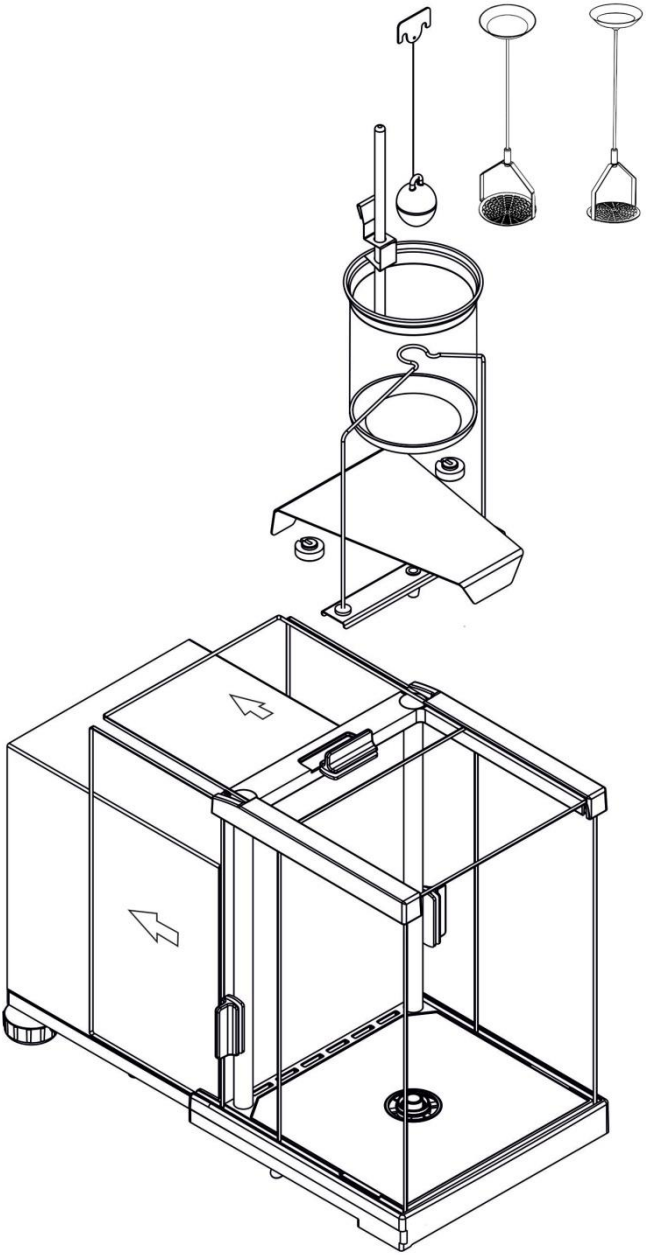

9. DENSITY DETERMINATION KIT INSTALLATION – AS SERIES BALANCE

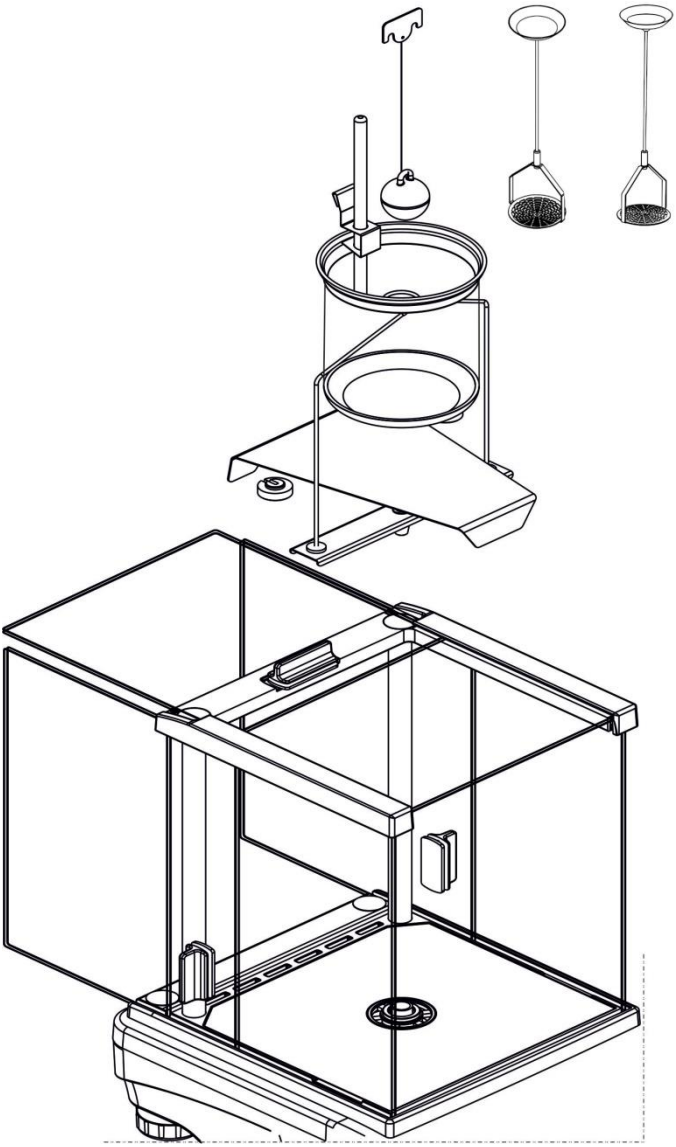

10. DENSITY DETERMINATION KIT INSTALLATION – PS SERIES BALANCE: 128x128mm weighing pan

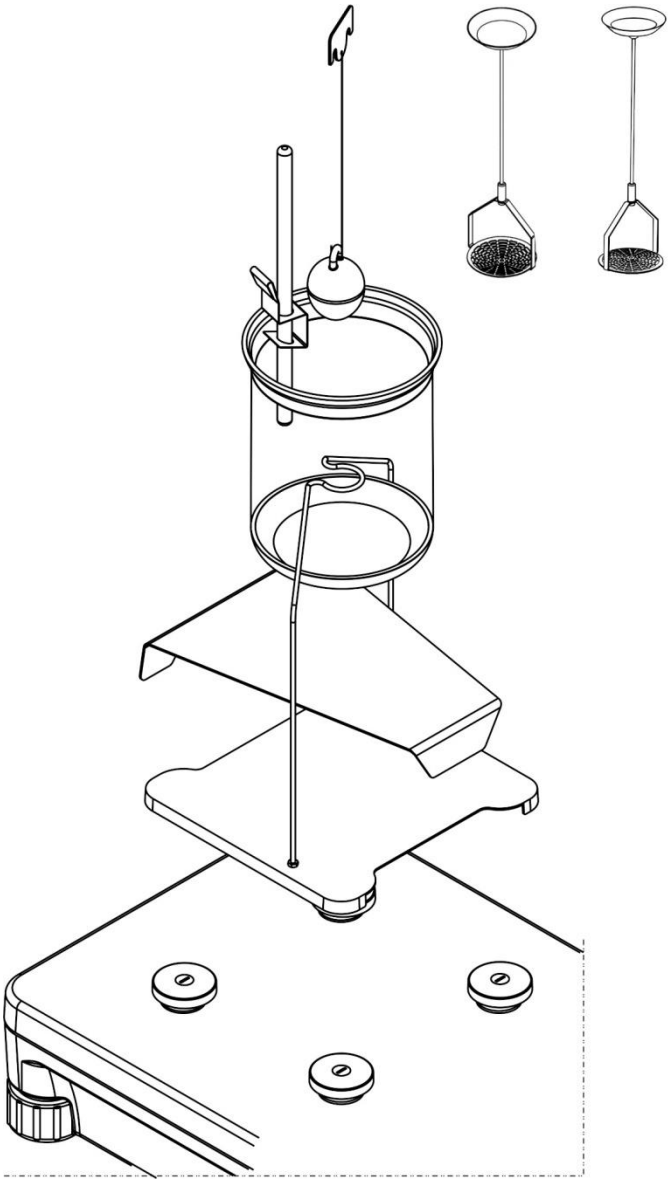

11. DENSITY DETERMINATION KIT INSTALLATION – PS SERIES BALANCE: 195x195mm weighing pan

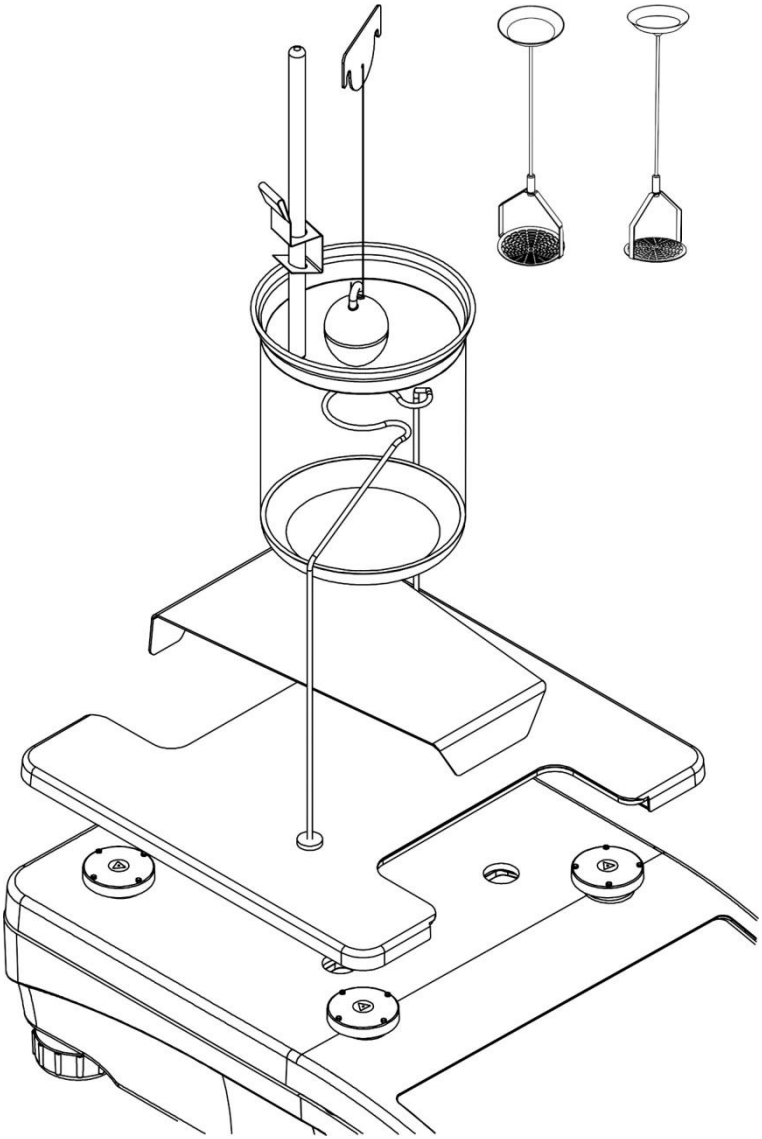

12. DENSITY DETERMINATION FOR PS SERIES BALANCES

It is not possible to carry out adjustment upon installation of density determination kit. Remember to carry out the adjustment procedure prior to installation.

12.1. Solids Density Determination

Remove the weighing pan, install density determination kit, refer to section 8. Place a beaker on a base making sure that it does not touch the stand. Install the thermometer, put it into a thermometer holder, mount the holder on a beaker edge. Pour ¾ of the beaker with liquid intended for testing (distilled water, alcohol or other liquid of known density). Install top weighing pan for solids density determination, make sure it takes the centre of the beaker, next check temperature of the liquid. The liquid temperature has to be stable in the course of measurements (liquid density is dependent form the temperature – variation may affect the measurement reliability). Now your kit is ready, you can start the measurement.

Installation of the kit for density determination of solids

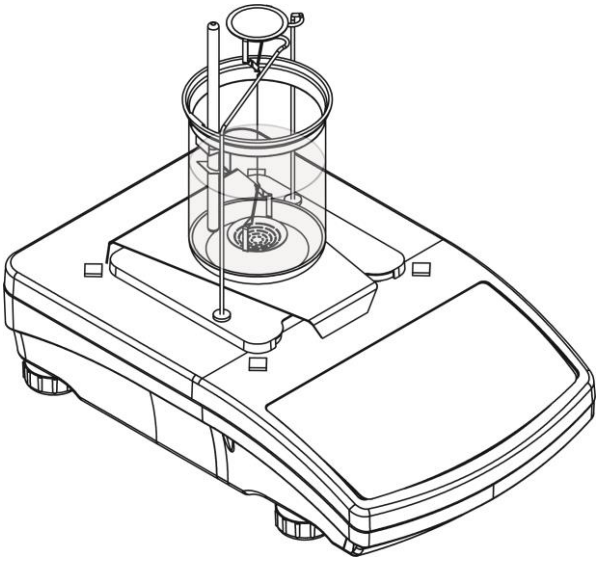

Procedure:

1. Remove the weighing pan.
2. Install density determination kit (refer to section 8).
3. Place a beaker on a base making sure that it does not touch the stand.

4. Install the thermometer, put it into a thermometer holder, mount the holder on a beaker edge.
5. Pour ¾ of the beaker with liquid intended for testing (distilled water, alcohol or other liquid of known density).
6. Install the stand, make sure it takes the centre of the beaker.
7. Check temperature of the liquid, the liquid temperature has to be stable in the course of measurements (liquid density is dependent form the temperature).
8. Press ZERO or TARE button located on the balance overlay.

Selecting liquid for the measurement:

- If WATER or ALCOHOL has been selected for measurement purposes, read its temperature and enter it to balance memory.
- Start density determination procedure (for the procedure overview read particular balance user manual)
- Put your sample on a top weighing pan, press ENTER button to save sample weight to balance memory.

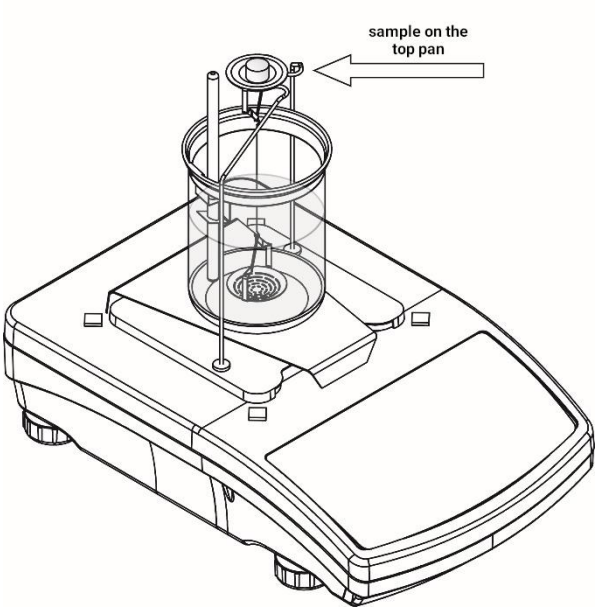

- Now put your sample on a bottom weighing pan, press ENTER button to save sample weight to balance memory.

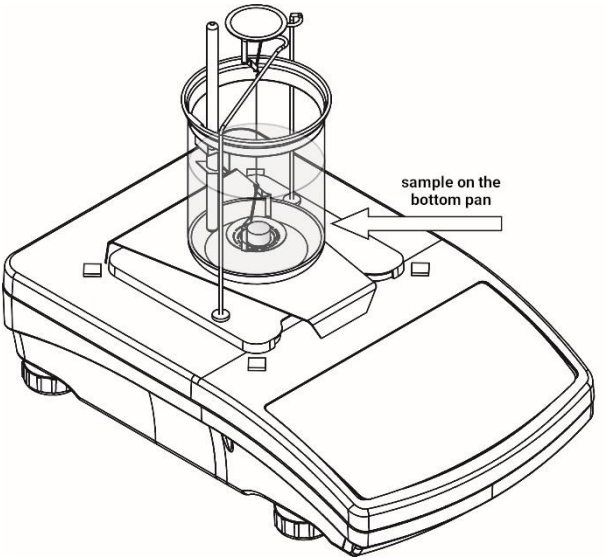

Upon confirmation of the second indication, the software automatically calculates measured solid density, which is next displayed together with a respective message, report on measurement is sent to a selected printer port.

12.2. Density Measurement of Solids of Density Lower Than Density of Liquid

(the sample floats on the liquid surface)

The measurement is carried in accordance with procedure described in section 10.1. The only difference is the need to place the sample under the bottom pan for the second measurement.

CAUTION!
When sample's displacement is larger than the pan's displacement (i.e. its weight), put supplementary load onto the bottom weighing pan prior to measurement.

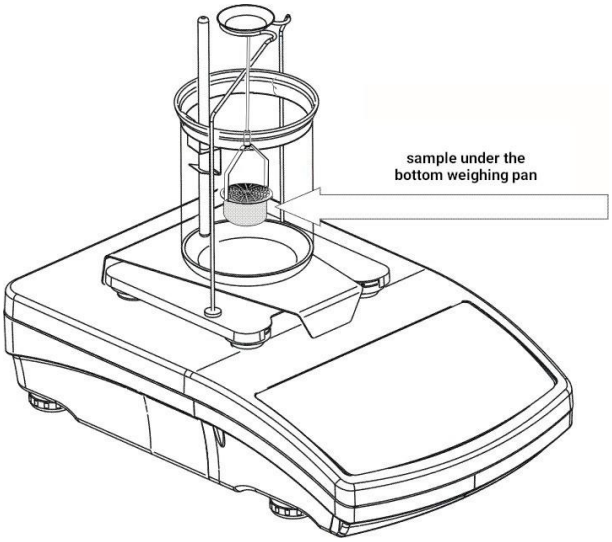

12.3. Liquids Density Determination

Installation of the kit for density determination of liquids.

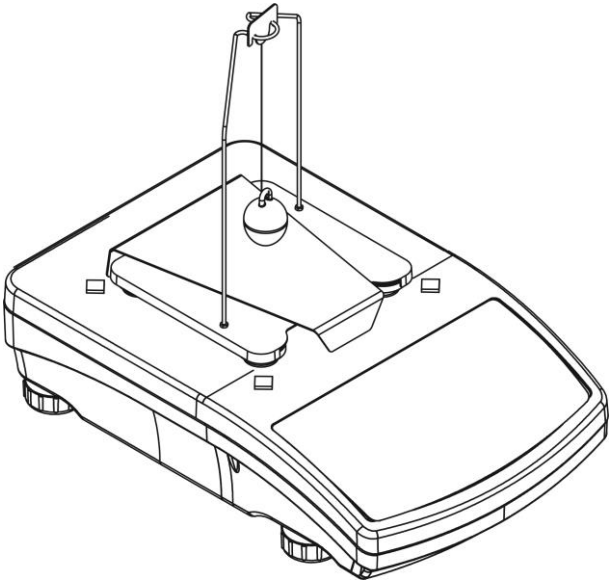

Procedure:

1. Remove the weighing pan.
2. Install density determination kit (refer to section 7).
3. When value other than 0.0000g is displayed, press ZERO or TARE button.
4. Pour the tested liquid into the beaker – place the beaker beside your balance (make sure that there is enough liquid for the sinker to be completely immersed).
5. Enter sinker's volume to balance memory (sinker's volume is given on the hanger).
6. Start density determination procedure (for the procedure overview read particular balance user manual).
7. Hang the sinker on a stand, wait for the indication to stabilize, press ENTER to confirm the indication.
8. Take the sinker off.

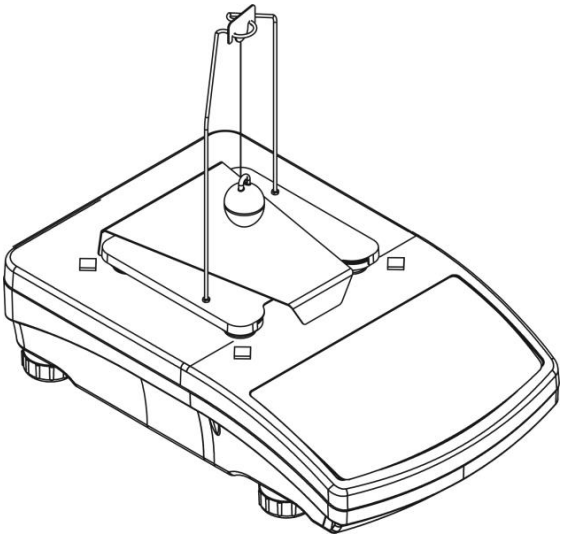

9. Put a beaker on the beaker basis (the beaker cannot be in contact with the stand).
10. Gently hang the sinker on the stand making sure that it is completely immersed in the liquid.

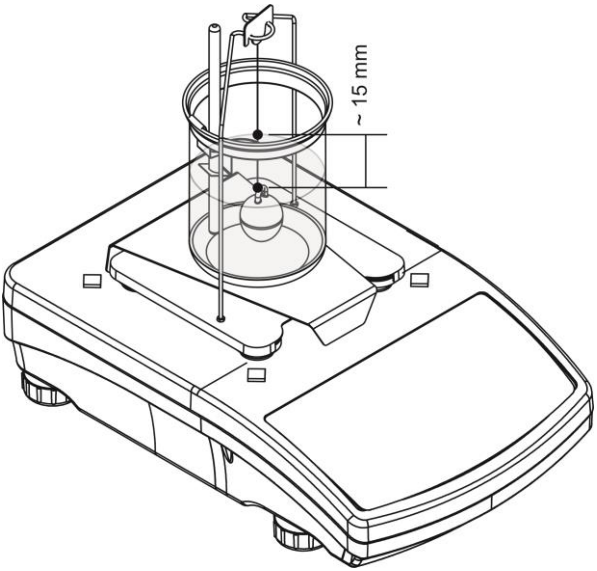

11. Wait for the indication to stabilize, press ENTER to confirm the indication.

Upon confirmation of the second indication, the software automatically calculates measured liquid density, which is next displayed together with a respective message, report on measurement is sent to a selected printer port.

13. DENSITY DETERMINATION FOR AS AND XA SERIES BALANCES

Density determination procedure for PS series balances and for AS and XA series balances is likewise. Section 11 of this user manual provides pictures presenting determination process carried out using AS series balances (the same kit is used for XA series).

13.1. Solids Density Determination

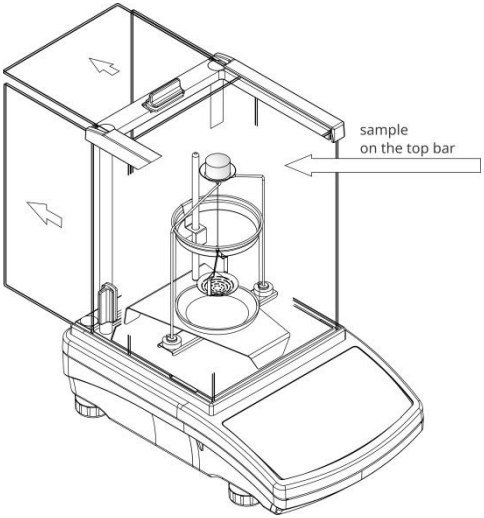

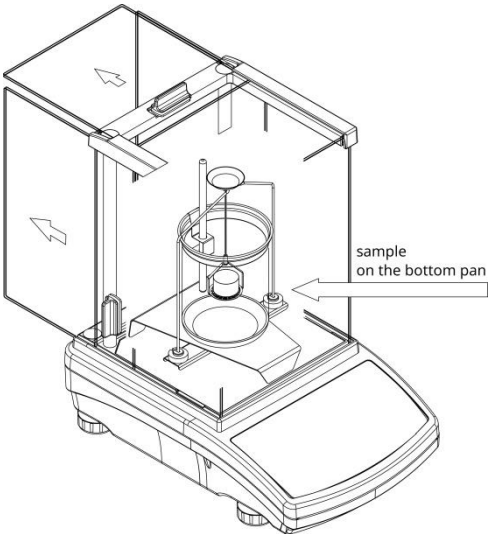

13.2. Density Measurement of Solids of Density Lower Than Density of Liquid

(the sample floats on the liquid surface)

The measurement is carried in accordance with procedure described in section 10.1. The only difference is the need to place the sample under the bottom pan for the second measurement.

CAUTION!
When sample's displacement is larger than the pan's displacement (i.e. its weight), put supplementary load onto the bottom weighing pan prior to measurement.

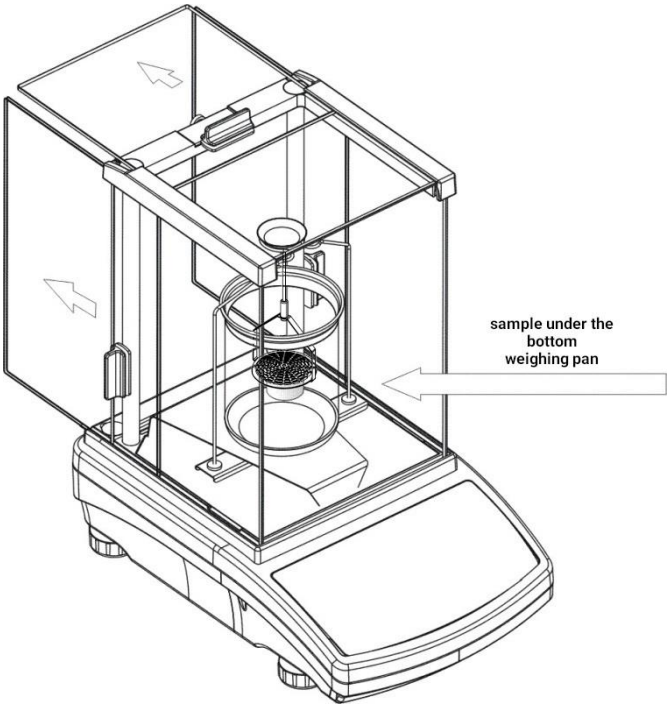

13.3. Density Measurement of Granulates

The measurement is carried out similarly as in case of solids and liquids density determination. The only difference is the need to place the sample under the bottom pan for the second measurement.

CAUTION!
If the sample has higher buoyancy than the weight of the weighing pan, place additional load on the weighing pan.

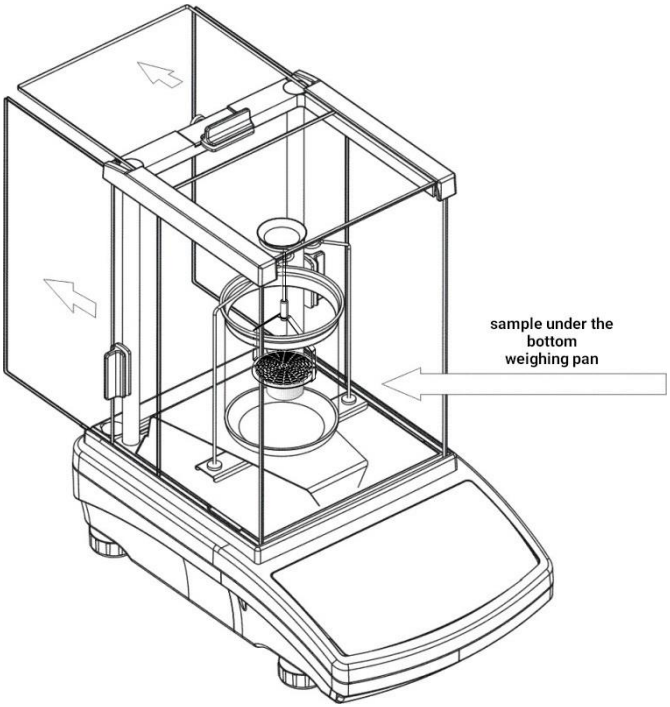

13.4. Liquid Density Determination

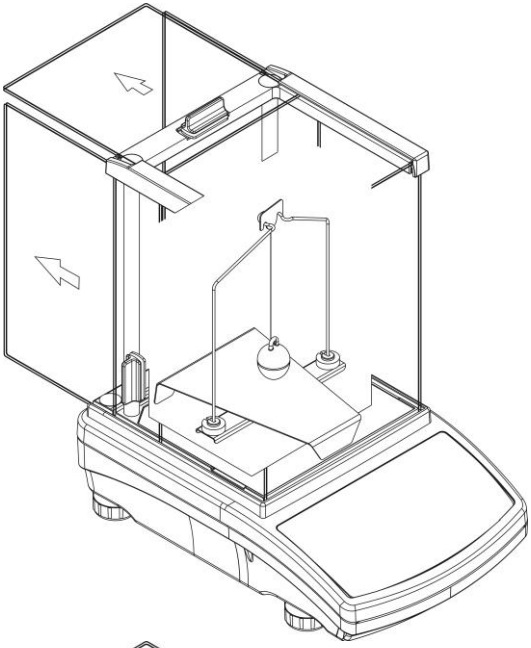

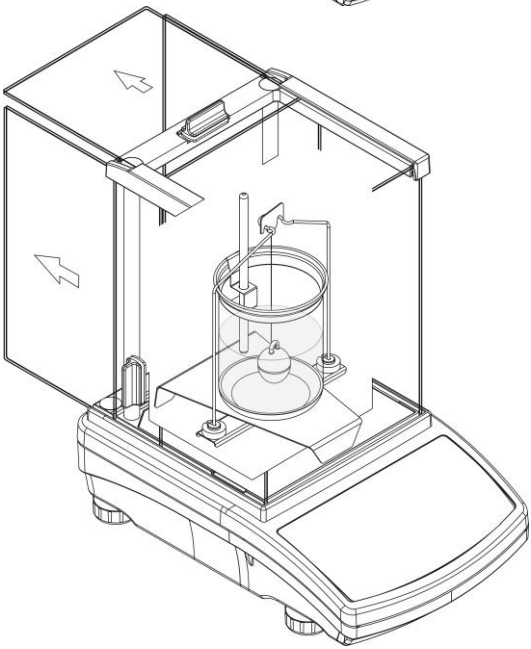

14. TABELES

14.1. Table 1. Relation between distilled water density and temperature

TEMP	0	1	2	3	4	5	6	7	8	9
0	0,99984	0,99990	0,99994	0,99996	0,99997	0,99996	0,99994	0,99990	0,99985	0,99978
10	0,99970	0,99961	0,99949	0,99938	0,99924	0,99910	0,99894	0,99877	0,99860	0,99841
20	0,99820	0,99799	0,99777	0,99754	0,99730	0,99704	0,99678	0,99651	0,99623	0,99594
30	0,99565	0,99934	0,99503	0,99470	0,99437	0,99403	0,99368	0,99333	0,99297	0,99259

14.2. Table 2. Relation between water density and temperature

(Official Journal of Measures No 7/94)

Water temperature [^{o}C]	Density of water [g/cm^{3}]
17,0	0,9988
17,5	0,9987
18,0	0,9986
18,5	0,9985
19,0	0,9984
19,5	0.9983
20,0	0,9982
20,5	0,9981
21,0	0,9980
21,5	0.9979
22,0	0,9978
22,5	0,9977
23,0	0,9975

14.3. Table 3. Selected Substances Density

(*Mechanical Engineer's Handbook Vol. 1*)

Name	Density [kg/m^3]	Name	Density [g/cm^3]
Bakelite	1270	Copper	8,9
Cotton	1300	Aluminum	2,7
Brick	1400	Iron	7,8
Sugar	1600	Platinum	21,4
Wood oak	900	Gold	19,3
Felt	300	Silver	10,5
Rubber	1200	Molybdenum	10,2
Linoleum	1200	Tin	7,3
Building paper	1100	Lead	11,4
Paper	900	Cadmium	8,65
Leather	1000	Mercury	13,6
Polished plate glass	2550	Indium	7,3
Peat	130	Bismuth	9,9
Calcareous plaster	1700	Tantalum	16,6
Glass wool	200	Nickel	8,9
Wax	950 – 980	Brass	8,4 - 8,7

14.4. Table 4. Selected Liquids Density at 20 °C

(*Mechanical Engineer's Handbook Vol. 1*)

Name	Density [kg/m^3]	Name	Density [kg/m^3]
Ammonia	610	Spindle oil	871
Petrol	680 – 740	Kerosene	800 - 850
Glycerine	1260	Ice 0 ^{o}C	917,6
Nitric acid 20%	1120	Nitrous acid	1050