USER GUIDE

INDIGO300

Vaisala · Authorized Partner

Distributed by AKRIBIS

M212849EN-D

User Guide

Transmitter for Vaisala Indigo-compatible probes

Indigo300

VAISALA

AKRIBIS · www.akribis.info · contacto@akribis.info

PUBLISHED BY

Vaisala Oyj
Vanha Nurmijärventie 21, FI-01670 Vantaa, Finland
P.O. Box 26, FI-00421 Helsinki, Finland
+358 9 8949 1
vaisala.com
docs.vaisala.com

© Vaisala 2025

No part of this document may be reproduced, published, or publicly displayed in any form or by any means, electronic or mechanical (including photocopying), nor may its contents be modified, translated, adapted, sold, or disclosed to a third party without prior written permission of the copyright holder. Translated document and translated portions of the document are based on the original English version. Parts of the translation may have been created using machine-assisted translation. In ambiguous cases, the English version is applicable, not the translation.

The contents of this document are subject to change without prior notice.

Local rules and regulations applicable to the products and services may vary, and they shall take precedence over the information contained in this document. Vaisala makes no representations on this document's compliance with the local rules and regulations applicable at any given time, and hereby disclaims any and all responsibilities related thereto. You are instructed to confirm the applicability of the local rules and regulations and their effect on the intended use of the products and services.

This document does not create any legally binding obligations for Vaisala towards customers or end users. All legally binding obligations are set forth exclusively in the applicable contract or in the relevant set of General Conditions of Vaisala (vaisala.com/policies).

This product contains software developed by Vaisala or third parties. Use of the software is governed by license terms and conditions included in the applicable contract or, in the absence of separate license terms and conditions, by the General License Conditions of Vaisala Group.

This product may contain open-source software (OSS) components. In the event this product contains OSS components, then such OSS is governed by the terms and conditions of the applicable OSS licenses, and you are bound by the terms and conditions of such licenses in connection with your use and distribution of the OSS in this product. Applicable OSS licenses are included in the product itself or provided to you on any other applicable media, depending on each individual product and the product items delivered to you.

Table of contents

1. About this document ... 9
1.1 Version information ... 9
1.2 Related manuals ... 10
1.3 Documentation conventions ... 11
1.4 Trademarks ... 11

2. Product overview ... 12
2.1 Introduction to Indigo300 transmitter ... 12
2.1.1 Indigo300 basic features and options ... 12
2.2 Transmitter parts ... 13
2.3 Transmitter display ... 14
2.3.1 Graph mode ... 15
2.3.2 Device status mode ... 15
2.4 LED status indicator ... 16
2.5 Safety ... 16
2.5.1 ESD protection ... 18
2.6 FCC Part 15 compliance statement ... 18
2.7 Canada ICES-3 / NMB-3 compliance statement ... 19

3. Installation ... 20
3.1 Installation workflow ... 20
3.2 Opening transmitter cover ... 20
3.3 Mounting ... 21
3.3.1 Mounting with adapter plate ... 23
3.3.2 Mounting with DIN rail adapter ... 25
3.4 Wiring ... 26
3.4.1 Transmitter base ... 27
3.4.2 Wiring options ... 28
3.4.3 Wiring from the back ... 29
3.4.4 Wiring through bottom lead-throughs ... 30
3.5 Finalizing installation ... 30
3.5.1 Verifying tightness of cable glands ... 31
3.5.2 Attaching grounding ... 31
3.6 Connecting probes ... 32
3.7 Example of installation in tight spaces ... 33

4. Using transmitter with Insight PC software ... 35
4.1 Vaisala Insight PC software ... 35
4.2 Connecting to Insight PC software ... 36
4.2.1 Installing driver for the USB service cable ... 37
4.3 Insight PC software overview ... 39
4.3.1 Unit settings ... 40

5. Using transmitter with Indigo80 handheld indicator 41
5.1 Indigo80 handheld indicator 41
5.1.1 Device compatibility 42
5.1.2 Indigo80 keypad 42
5.1.3 Indigo80 main menu 42
5.2 Connecting Indigo300 to Indigo80 handheld indicator 43
5.3 Selecting parameters and units shown on transmitter display 45
5.4 Selecting parameters and units shown on Indigo80 display 46

6. Configuring analog outputs 48
6.1 Configuring analog outputs with Insight PC software 48
6.1.1 Analog output configuration overview 48
6.1.2 Analog output configuration example 49
6.1.3 Clearing transmitter analog output configuration 50
6.2 Configuring analog outputs with Indigo80 handheld indicator 51
6.2.1 Analog output configuration overview 51
6.2.2 Analog output configuration example 51
6.2.3 Clearing transmitter analog output configuration 52
6.3 Analog output overrange behavior 52
6.3.1 Analog output overrange example 53

7. Calibration and adjustment 54
7.1 Calibration and adjustment overview 54
7.2 Calibration and adjustment with Insight PC software 55
7.2.1 Calibration overview 55
7.2.2 Environmental compensation 56
7.2.3 CO_2 probe adjustment example 57
7.2.4 Analog output adjustment 58
7.3 Calibration and adjustment with Indigo80 handheld indicator 62
7.3.1 Relative humidity probe adjustment example 62
7.3.2 Restoring factory adjustment for analog outputs 63
7.3.3 Analog output adjustment 64

8. Maintenance and troubleshooting 67
8.1 Cleaning 67
8.2 Replacing probes 67
8.3 Restoring factory default settings with Insight PC software 68
8.4 Restoring factory default settings with Indigo80 handheld indicator 68
8.5 Troubleshooting 69
8.6 Display messages 70
8.7 Writing a problem report 71

9. Technical data 72
9.1 Specifications 72
9.2 Dimensions 74
9.3 Spare parts and accessories 75

Appendix A: Recycling instructions.....77

Maintenance and calibration services..... 79

Warranty.....79

Technical support.....79

Recycling..... 79

List of figures

Figure 1 Indigo300 connections overview....12
Figure 2 Indigo300 transmitter parts....13
Figure 3 Indigo300 display, numerical mode....14
Figure 4 Indigo300 display, graph mode....15
Figure 5 Indigo300 display, device status mode....15
Figure 6 Opening transmitter cover....21
Figure 7 Mounting through transmitter body....22
Figure 8 Transmitter body mounting dimensions....22
Figure 9 Mounting with adapter plate....24
Figure 10 Adapter plate mounting dimensions....24
Figure 11 Mounting with DIN rail adapter....25
Figure 12 Indigo300 transmitter base with screw terminals....27
Figure 13 Indigo300 wiring options and cable diameters....29
Figure 14 Indigo300 grounding using external grounding terminal....32
Figure 15 Connecting probes to Indigo300 transmitter....33
Figure 16 Example of installation in tight space....34
Figure 17 Connecting Indigo300 transmitter to Insight PC software....37
Figure 18 Insight software main menu view with transmitter and connected probe....39
Figure 19 Unit selection example with humidity and temperature probe....40
Figure 20 Indigo80 handheld indicator....41
Figure 21 Indigo80 keypad....42
Figure 22 Indigo80 main menu....42
Figure 23 Connecting Indigo300 transmitter to Indigo80 handheld indicator....44
Figure 24 Analog output configuration options example in Insight....48
Figure 25 Analog output type (current or voltage) selection in Insight....49
Figure 26 Analog output overrange behavior example....53
Figure 27 Insight calibration menu main view (humidity and temperature probe)....55
Figure 28 Insight Calibrate menu selection....56
Figure 29 Insight Restore factory adjustment selection....56
Figure 30 Insight environmental compensation configuration example with CO_2 probe....57
Figure 31 Insight analog output adjustment view....58
Figure 32 Insight Diagnostics view example with analog output test options....60
Figure 33 Indigo300 transmitter dimensions....74
Figure 34 Materials for recycling....77

List of tables

Table 1 Document versions (English)....9
Table 2 Related manuals....10
Table 3 LED statuses....16
Table 4 Power supply input terminals....27
Table 5 Analog output terminals....28
Table 6 Probe connection terminals....28
Table 7 Transmitter analog channel fixed test output levels....58
Table 8 Transmitter analog channel fixed test output levels....64
Table 9 Indigo transmitter messages shown on display....70
Table 10 Indigo-compatible probes....72
Table 11 Indigo300 operating environment....72
Table 12 Indigo300 inputs and outputs....72
Table 13 Indigo300 compliance....73
Table 14 Indigo300 mechanical specifications....74
Table 15 Probe connection cables....75
Table 16 Indigo300 spare parts and accessories....76
Table 17 Materials for recycling....77

1. About this document

1.1 Version information

This document provides instructions on installing, using and maintaining Vaisala Indigo300 Transmitter.

Table 1 Document versions (English)

Document code	Date	Description
M212849EN-D	June 2025	IP rating when using the locking wheel to connect probe cables changed to IP66 with updated locking wheel design. Added a clarification about the possibility to connect probes when the transmitter is powered. Updated sections: • Connecting probes (page 32) • Specifications (page 72)
M212849EN-C	November 2024	Updated sections: • Transmitter parts (page 13): Updated the product image with information on the serial number and device configuration code. Added linking to the Vaisala order form. • Transmitter base (page 27) and Probe connection terminals (page 28): Updated information on probe connection terminals. • Vaisala Insight PC software (page 35) and Indigo80 handheld indicator (page 41): Added information about changing the transmitter's display settings and metric/non-metric units, and the connected probe's features and settings. • Selecting parameters and units shown on transmitter display (page 45) and Selecting parameters and units shown on Indigo80 display (page 46): Added information on how to change the displayed units to metric/non-metric using the Indigo80 handheld indicator. • Relative humidity probe adjustment example (page 62): Updated with information on using previously collected calibration readings for the adjustment. • Troubleshooting (page 69): Added information on the connected probe's calibration expiry message. • Specifications (page 72): Updated information on analog outputs and compliance marks. • Spare parts and accessories (page 75): Added information on the DIN rail width.

Document code	Date	Description
M212849EN-B	May 2024	Added information on the non-display version of the transmitter to the following sections: • Indigo300 basic features and options (page 12) • Transmitter parts (page 13) • Display messages (page 70) • Specifications (page 72) Added sections LED status indicator (page 16) and Installation workflow (page 20). Updated section Selecting parameters and units shown on transmitter display (page 45) and added section Selecting parameters and units shown on Indigo80 display (page 46). Updated the safety requirements for power supply in Wiring (page 26). Added information on powering up the transmitter temporarily with Indigo80 to Indigo80 handheld indicator (page 41). Added instructions on testing analog output levels in Testing analog output level in Diagnostics view (page 60). Updated operating environment-related information and current consumption values in Specifications (page 72). Updated information on the probe connection cables in Spare parts and accessories (page 75).

1.2 Related manuals

For the latest versions of these documents, see docs.vaisala.com.

Table 2 Related manuals

Document code	Name
M212848EN	Vaisala Indigo300 Transmitter Quick Guide
M212722EN	Vaisala Indigo80 Handheld Indicator User Guide
M212022EN	Vaisala HMP Series with MMP8 and TMP1 User Guide
M212357EN	Vaisala DMP Series User Guide
M211799EN	Vaisala GMP251 and GMP80P Carbon Dioxide Probe User Guide
M211897EN	Vaisala GMP252 Carbon Dioxide Probe User Guide
M211888EN	Vaisala HPP271 Hydrogen Peroxide Probe User Guide

Document code	Name
M211972EN	Vaisala HPP272 Hydrogen Peroxide, Humidity and Temperature Probe User Guide

1.3 Documentation conventions

WARNING! Warning alerts you to a serious hazard. If you do not read and follow instructions carefully at this point, there is a risk of injury or even death.

CAUTION! Caution warns you of a potential hazard. If you do not read and follow instructions carefully at this point, the product could be damaged or important data could be lost.

Highlights important information on using the product.

Gives information for using the product more efficiently.

Lists tools needed to perform the task.

Indicates that you need to take some notes during the task.

1.4 Trademarks

Vaisala® is a registered trademark of Vaisala Oyj.

Indigo™ is a trademark of Vaisala Oyj.

Microsoft® and Windows® are either registered trademarks or trademarks of Microsoft Corporation in the United States and other countries.

All other product or company names that may be mentioned in this publication are trade names, trademarks, or registered trademarks of their respective owners.

2. Product overview

2.1 Introduction to Indigo300 transmitter

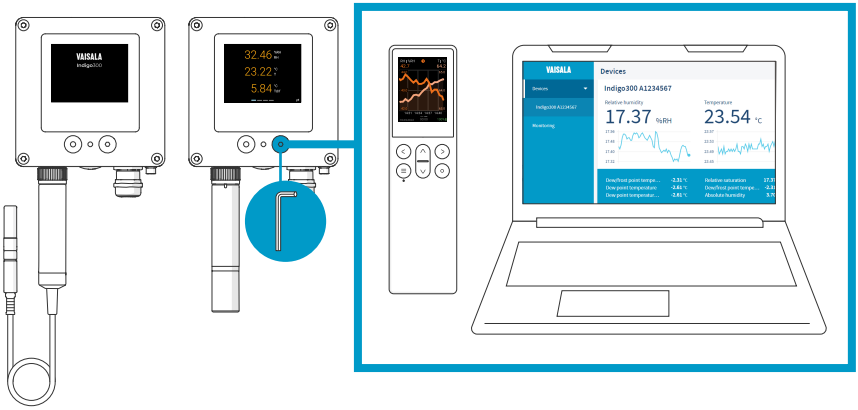

Figure 1 Indigo300 connections overview

Vaisala Indigo300 Transmitter is a host device for displaying measurement values from Vaisala Indigo-compatible probes and/or transmitting them to automation systems through analog signals.

Probes can be connected to the transmitter tool-free using the locking wheel of the probe connector. You can connect a probe directly or by using a cable. Instead of the locking wheel and a detachable cable, it is also possible to use a cable gland with a fixed cable.

The service port on the front can be opened with a 4-mm Allen key for access to the free Vaisala Insight PC software or Indigo80 handheld indicator.

With Insight and Indigo80, you can view live measurement data from the probe connected to the transmitter, configure both the transmitter and the probe, as well as calibrate and adjust the probe without having to detach it from the transmitter.

2.1.1 Indigo300 basic features and options

- All Vaisala Indigo-compatible probes can be connected to all Indigo transmitter models
- Numerical and graphical color display for up to 3 parameters
- Non-display version with an LED status indicator also available
- Support for one Indigo-compatible probe
- Power supply input 15–30 V DC (24 V AC ±10 % 50/60Hz)
- 3 preconfigured analog outputs (mA or V)
- Service port for connecting to Vaisala Insight PC software or Indigo80 handheld indicator
- 1-m, 3-m, 5-m, and 10-m probe connection cables available as accessories

2.2 Transmitter parts

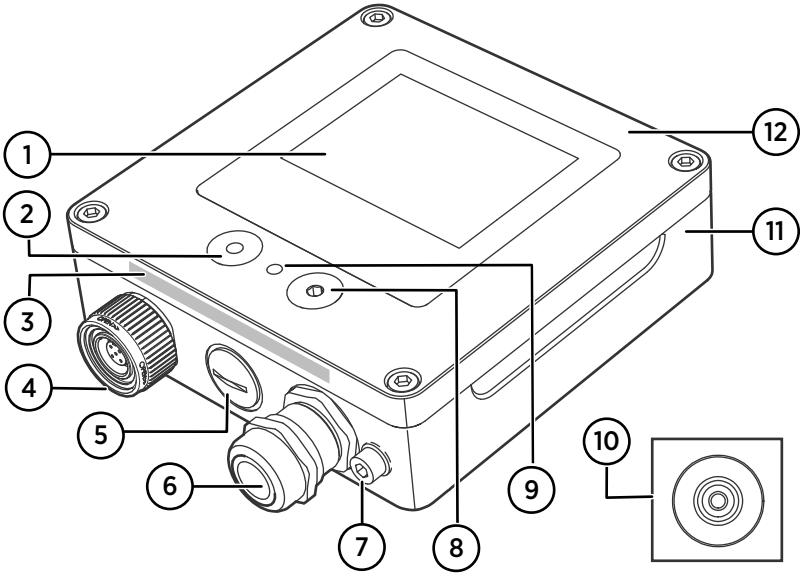

Figure 2 Indigo300 transmitter parts

1 Display (optional, selected when ordering the transmitter)
2 Push button for display navigation (only transmitters that have a display)
3 Serial number and device configuration code for the options selected with the Vaisala order form
4 Locking wheel with a connector for probe or probe cable. Alternatively, this lead-through can be ordered with a fixed cable and M16×1.5 cable gland pre-installed.
5 Lead-through for cables. Plugged, or equipped with a M16×1.5 cable gland or an NPT 1/2″ conduit fitting.
6 Lead-through for cables. Plugged, or equipped with a M20×1.5 cable gland or an NPT 1/2″ conduit fitting.
7 Grounding terminal
8 Service port for connection to Insight PC software or Indigo80 handheld indicator
9 LED status indicator
10 Rubber lead-through for cables, at the back
11 Transmitter base: mounting base and screw terminals for cables
12 Top cover: optional display and circuit board

The lead-through options (locking wheel, cable glands, conduit fittings, and plugs) are selected when ordering the transmitter. For example configurations and explanations for your device's configuration code, see Indigo300 Order Form (G010008EN).

2.3 Transmitter display

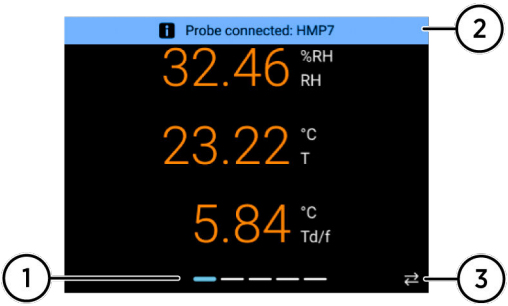

Figure 3 Indigo300 display, numerical mode

1 Display view navigation icons
2 Message field for notifications, warnings, and errors
3 Active connection to Insight PC software or Indigo80 handheld indicator

In transmitters with a display, you can configure the display to show 1 to 3 measurement parameters in numeric and graph format. Notifications, warnings, and errors are shown on a message row on the top part of the display.

The displayed parameters and units, display brightness, and display mode (numeric or graph) can be configured with the Insight PC software or Indigo80 handheld indicator.

By default, the display shows the output parameters configured for the transmitter's analog outputs. If no output parameters have been configured for the analog outputs, the display shows the preferred parameters of the connected probe.

To view measurement data from a non-display version of the transmitter, connect the transmitter to the Insight PC software or Indigo80 handheld indicator.

Switching between display views and turning display off and on

To switch between different display views, push the left button on the front cover once.

To turn the display off and on, keep the left button pressed down for a few seconds. You can also turn the display off and on with Insight PC software or Indigo80 handheld indicator. When the display is off, the LED status indicator lights up to inform about the device status.

2.3.1 Graph mode

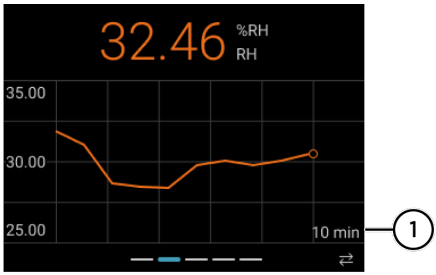

Figure 4 Indigo300 display, graph mode

1 Graph time scale. Shows the latest 10 minutes by default.

You can set the transmitter display to show the connected probe's measurement data as graphs.

The measurement parameters and the graph time scale can be configured with the Insight PC software or Indigo80 handheld indicator.

> You can switch between the different display views with the push button on the front of the transmitter.

2.3.2 Device status mode

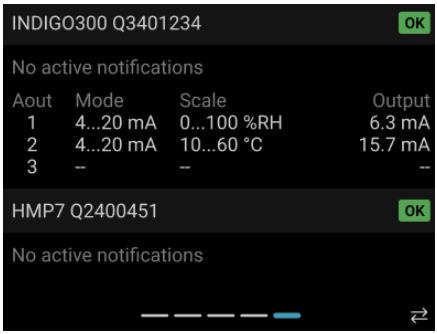

Figure 5 Indigo300 display, device status mode

The rightmost display view shows the status of the transmitter and the connected probe. Any active notifications, for example, about the probe's calibration having expired, are shown. In addition, the view shows the mode, scaling, and output value of the transmitter's analog outputs.

To navigate to the device status view, press the push button on the front of the transmitter repeatedly. The view is shown for 1 minute, after which the display automatically reverts to the numeric view.

2.4 LED status indicator

Transmitters with a display show the status of the transmitter and the connected probe on the display. If you turn the display off, the transmitter uses an LED indicator to inform you of the device status.

In non-display transmitters, the device status is indicated by the LED only. To see, for example, active warning messages, connect the transmitter to the Insight PC software or Indigo80 handheld indicator.

The following table describes the LED statuses in both transmitter models (with and without the display).

Table 3 LED statuses

LED color	Description
Not lit	Power is off.
Green, blinking	The transmitter is starting up or no probe is connected, or there is an active warning in the transmitter and/or the connected probe.
Green, solid	The transmitter and the connected probe are both working normally. Normal measurement.
Red, blinking	The transmitter and/or the connected probe is in error state. Connect the transmitter to the Insight PC software or Indigo80 handheld indicator to get more information and to configure.

More information

- Connecting to Insight PC software (page 36)
- Connecting Indigo300 to Indigo80 handheld indicator (page 43)
- Display messages (page 70)

2.5 Safety

This product has been tested for safety. Note the following precautions:

WARNING! Read the product documentation carefully before installing or operating the product. If you encounter the following marking during installation or operation, consult product documentation to find out the nature of the potential hazards and any actions which have to be taken to avoid them:

WARNING! Failure to comply with these precautions or with specific warnings elsewhere in these instructions violates safety standards of design, manufacture, and intended use of the product. Vaisala assumes no liability for the customer's failure to comply with these requirements.

WARNING! If the equipment is used in a manner not specified by Vaisala, the protection provided by the equipment may be impaired.

WARNING! Only licensed experts may install electrical components. They must adhere to local and state legislation and regulations.

WARNING! Keep away from live circuits. Operating personnel must observe safety regulations at all times.

WARNING! Make sure that you prepare and connect only de-energized wires.

CAUTION! Always choose a power supply unit that conforms to the local standards and requirements.
In North America, only power the device with one of the following:

- An approved/certified Class 2 power supply. The output of the power supply may not exceed 100 VA, with operating voltage not more than 30 V_{rms}, 42.4 V_{peak}, or 60 V DC.
- An approved/certified Limited Power Source (LPS) (CAN/CSA-C22.2 No. 60950-1 or UL 60950-1).

CAUTION! Make sure to use the power supply unit only in its specified environmental conditions.

CAUTION! Only connect compatible measurement devices to the transmitter. Attempting to connect incompatible devices or cables can damage the equipment. Refer to transmitter specifications for compatibility information.

CAUTION! Use only cables provided by Vaisala to connect devices to the transmitter. Attempting to connect incompatible devices or cables can damage the equipment.

CAUTION! Do not modify the unit or use it in ways not described in the documentation. Improper modification or use may lead to safety hazards, equipment damage, failure to perform according to specification, or decreased equipment lifetime.

2.5.1 ESD protection

Electrostatic discharge (ESD) can damage electronic circuits. Vaisala products are adequately protected against ESD for their intended use. However, it is possible to damage the product by delivering electrostatic discharges when touching, removing, or inserting any objects in the equipment housing.

To avoid delivering high static voltages to the product:

- Handle ESD-sensitive components on a properly grounded and protected ESD workbench or by grounding yourself to the equipment chassis with a wrist strap and a resistive connection cord.
- If you are unable to take either precaution, touch a conductive part of the equipment chassis with your other hand before touching ESD-sensitive components.
- Hold component boards by the edges and avoid touching component contacts.

2.6 FCC Part 15 compliance statement

This equipment has been tested and found to comply with the limits for a Class A digital device, pursuant to part 15 of the FCC Rules. These limits are designed to provide reasonable protection against harmful interference when the equipment is operated in a commercial environment. This equipment generates, uses, and can radiate radio frequency energy and, if not installed and used in accordance with the instruction manual, may cause harmful interference to radio communications. Operation of this equipment in a residential area is likely to cause harmful interference in which case the user will be required to correct the interference at his own expense.

CAUTION! Changes or modifications to this equipment not expressly approved by the party responsible for compliance could void the user's authority to operate the equipment.

This device complies with part 15 of the FCC Rules. Operation is subject to the following two conditions: (1) This device may not cause harmful interference, and (2) this device must accept any interference received, including interference that may cause undesired operation.

2.7 Canada ICES-3 / NMB-3 compliance statement

This Class A digital apparatus complies with Canadian ICES-3.

Cet appareil numerique de la classe A est conforme a la norme NMB-3 du Canada.

3. Installation

3.1 Installation workflow

Installing the transmitter consists of these steps:

1. Opening transmitter cover (page 20)
2. Mounting (page 21)
3. Wiring (page 26)
4. Finalizing installation (page 30)
5. Connecting probes (page 32)

Once a probe is connected, the transmitter starts to output measurement data. If you want to get an automatic date and time setup for the transmitter or configure additional device settings, connect the transmitter to the Insight PC software or the Indigo80 handheld indicator through the service port on the transmitter's top cover.

The service port connection to Insight or Indigo80 can also be used to power up the transmitter and the connected probe temporarily, so you can configure device settings even before mounting and wiring, if needed. This is useful, for example, when the installation location is tight.
Note that while the transmitter and probe are powered through the service port, the supply voltage may not be sufficient to provide all functions of the probe.

CAUTION! The service port connection is only intended for temporary use during configuration, and must not be used for permanent installations. The IP rating and EMC properties of the transmitter can be affected when the service port is open.

More information

- Connecting to Insight PC software (page 36)
- Connecting Indigo300 to Indigo80 handheld indicator (page 43)

3.2 Opening transmitter cover

- 4-mm Allen key, provided

CAUTION! To avoid damaging the connector pins of the transmitter, pull the transmitter cover straight off the base. Do not twist or bend. Be careful not to drop the cover when it comes off.

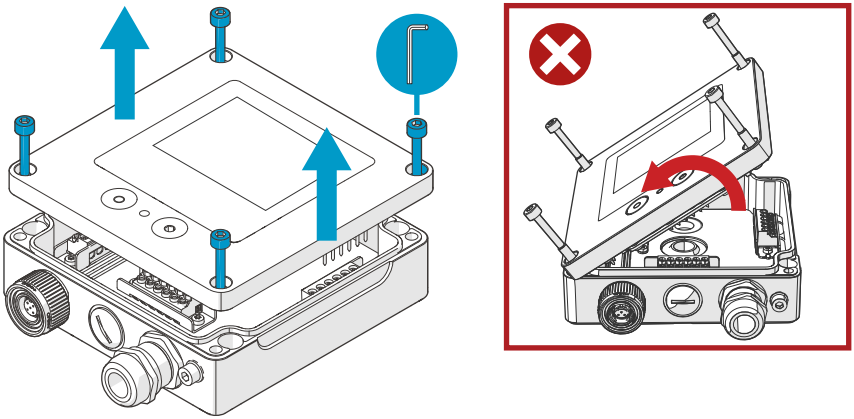

Figure 6 Opening transmitter cover

1. Loosen the screws on the transmitter cover.
2. Carefully open the transmitter cover part of the way from both sides, so that it is easier to pull the cover off the base. The cover may be tight.
3. Pull the transmitter cover carefully straight off the base. Do not twist or bend. Be careful not to drop the cover when it comes off.
4. When you reattach the transmitter cover, tighten the screws hand-tight using the 4-mm Allen key (recommended tightening torque 3.6 Nm).

3.3 Mounting

- 4-mm Allen key, provided
- At least 2 pcs Ø 4–5 mm screws and wall plugs. Select the screws and plugs according to the properties of the installation surface.
- Drill with suitable drill bit

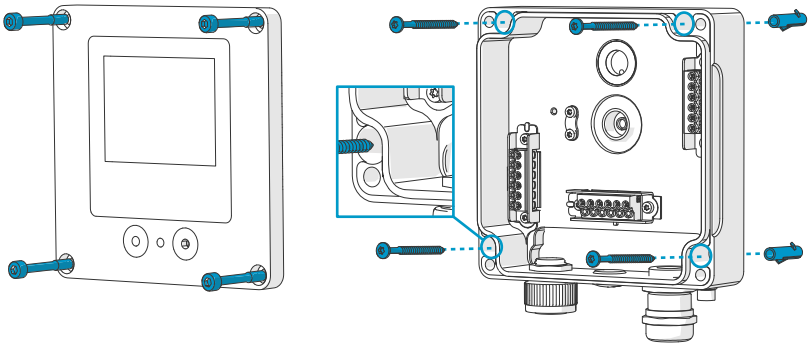

Figure 7 Mounting through transmitter body

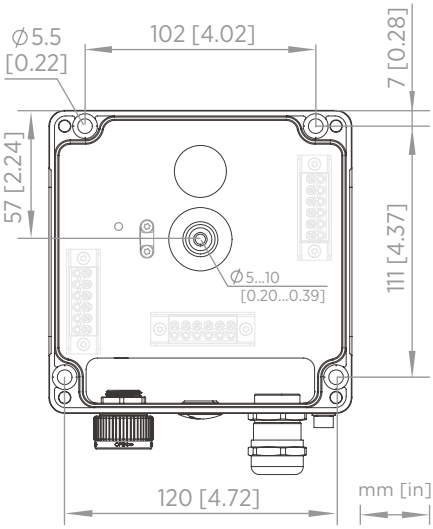

Figure 8 Transmitter body mounting dimensions

1. Open the transmitter cover.
2. Use a pen to mark the places of the mounting holes on the installation surface.
3. Drill the mounting holes and insert the wall plugs in the holes.

4. If you intend to wire the transmitter through the rubber lead-through at the back:
   a. Remove the center of the rubber lead-through.
   b. Lead the cables to the inside of the transmitter enclosure before mounting.

   For more information on wiring from the back, see the wiring options.
5. Mount the transmitter base using at least one screw at the top and one at the bottom.
6. Connect the wiring to the applicable screw terminals.
7. Reattach the transmitter cover.

   Tighten the screws hand-tight using the 4-mm Allen key (recommended tightening torque 3.6 Nm).

More information

- Wiring options (page 28)

3.3.1 Mounting with adapter plate

- 4-mm Allen key, provided
- M5×20 screws (4 pcs) for attaching the transmitter to the adapter plate, provided
- Screws and wall plugs (4 pcs) for attaching the adapter plate to the mounting holes. Select the screws and plugs according to the properties of the installation surface.
- Drill with suitable drill bit

Using an adapter plate, you can install an Indigo300 transmitter to replace a Vaisala 330 series transmitter in the exact same location. The adapter plate has an opening in the middle, which you can utilize if you intend to wire the transmitter through the back.

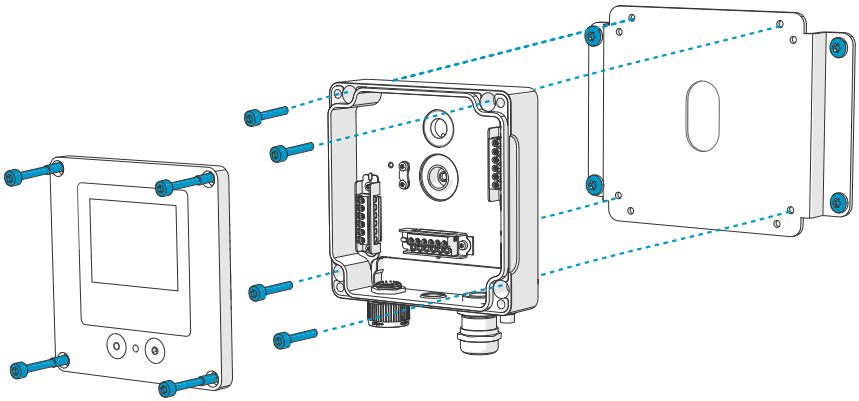

Figure 9 Mounting with adapter plate

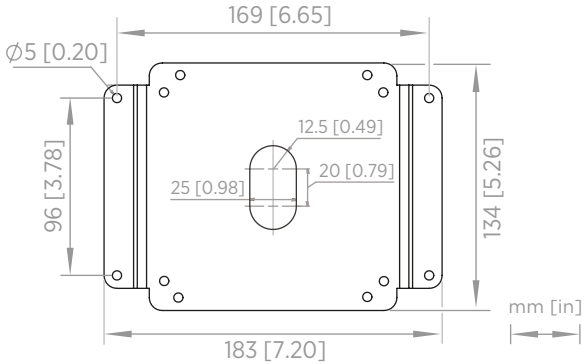

Figure 10 Adapter plate mounting dimensions

1. If you intend to wire the transmitter through the back, lead the cables through the opening in the adapter plate.
2. Attach the adapter plate to the mounting holes using 4 screws and 4 wall plugs.
3. Open the transmitter cover.
4. If you intend to wire the transmitter through the lead-through at the back:
   a. Remove the center of the rubber lead-through.
   b. Lead the cables to the inside of the transmitter enclosure before attaching it to the adapter plate.

For more information on wiring through the back, see the wiring options.

5. Attach the transmitter to the adapter plate using M5×20 screws and a 4-mm Allen key.

   Recommended tightening torque: 3.6 Nm
6. Connect the wiring to the applicable screw terminals.
7. Reattach the transmitter cover.

   Tighten the screws hand-tight using the 4-mm Allen key (recommended tightening torque 3.6 Nm).

More information

- Wiring options (page 28)

3.3.2 Mounting with DIN rail adapter

- T10 Torx key
- M3×8 screws (4 pcs), provided

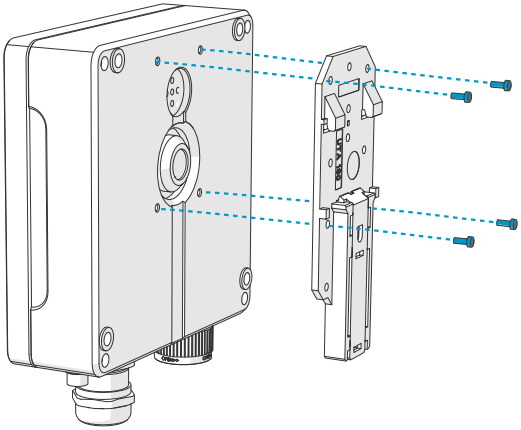

Figure 11 Mounting with DIN rail adapter

1. Attach the DIN rail adapter to the back of the transmitter with M3×8 screws and the Torx key.

   Recommended tightening torque: 1.2 Nm
2. Snap the transmitter to the DIN rail.

3.4 Wiring

- Cables as required by your application
- Crimping tool and wire ferrules
- Small crosshead screwdriver for the screw terminals
- Utility knife
- Suitable tools for tightening the cable glands, conduits and/or plugs required by your application

WARNING! Only licensed experts may install electrical components. They must adhere to local and state legislation and regulations.

WARNING! Make sure that you prepare and connect only de-energized wires.

Safety requirements for power supply

CAUTION! Always choose a power supply unit that conforms to the local standards and requirements.
In North America, only power the device with one of the following:

- An approved/certified Class 2 power supply. The output of the power supply may not exceed 100 VA, with operating voltage not more than 30 V_{rms}, 42.4 V_{peak}, or 60 V DC.
- An approved/certified Limited Power Source (LPS) (CAN/CSA-C22.2 No. 60950-1 or UL 60950-1).

CAUTION! Make sure to use the power supply unit only in its specified environmental conditions.

If you are using a 24 V AC power supply for the transmitter, make sure to use separate cables for the AC power and the analog outputs to ensure that the EMC requirements are fulfilled.

3.4.1 Transmitter base

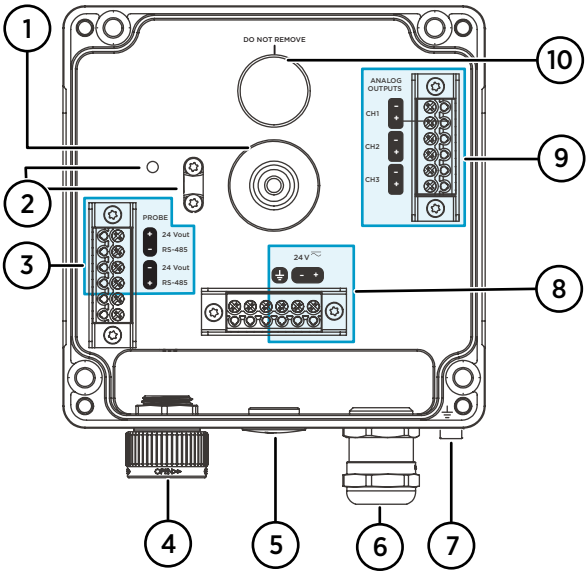

Figure 12 Indigo300 transmitter base with screw terminals

1 Rubber lead-through for wiring from the back
2 Cable strain relief clip and its mounting holes. The clip can be installed horizontally or vertically.
3 Probe connection terminals
4 Locking wheel or M16×1.5 cable gland for probe connection
5 Lead-through with plug, M16×1.5 cable gland or NPT1/2″ conduit fitting
6 Lead-through with plug, M20×1.5 cable gland or NPT1/2″ conduit fitting
7 Grounding terminal
8 Power supply input terminals
9 Analog output terminals
10 Enclosure breathing membrane. Do not remove or pierce.

3.4.1.1 Power supply input terminals

Table 4 Power supply input terminals

Terminal	Function	Notes
⏚	Power supply ground	Can also be used for grounding the transmitter. There is also an external grounding terminal on the bottom of the transmitter enclosure.

Terminal	Function	Notes
24 V -	Negative supply voltage	15–30 V DC [1] or 24 V AC ±10 % 50/60 Hz
24 V +	Positive supply voltage	

1) When used with the HMP7 probe, the minimum required power supply input is 18 V DC.

3.4.1.2 Analog output terminals

Table 5 Analog output terminals

Terminal	Function	Notes
CH -	Analog output channel 1 -	Max. wire size: 1.5 mm^2 (16 AWG), solid wires or ferrules recommended
CH +	Analog output channel 1 +	
CH -	Analog output channel 2 -	
CH +	Analog output channel 2 +	
CH -	Analog output channel 3 -	
CH +	Analog output channel 3 +	

3.4.1.3 Probe connection terminals

Table 6 Probe connection terminals

Terminal	Function	Color	Notes
24 Vout +	Positive supply voltage to probe	Brown	Max. wire size: 1.5 mm^2 (16 AWG)
RS-485 -	RS-485 -	White	
24 Vout -	Power GND and RS-485 common	Blue	
RS-485 +	RS-485 +	Black	

3.4.2 Wiring options

CAUTION! Do not energize the power supply before the wiring has been connected.

The transmitter wiring options include a lead-through at the backside and lead-throughs on the bottom.

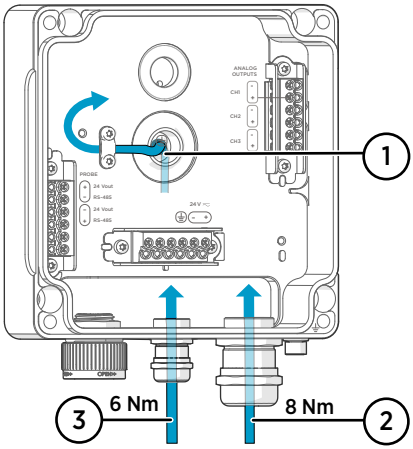

Figure 13 Indigo300 wiring options and cable diameters

1 Wiring from the back
   - Cable diameter: 5–10 mm (0.20–0.39 in)
2 Wiring through a M20×1.5 gland or conduit fitting NPT 1/2″
   - Cable diameter for M20 gland: 7–13 mm (0.26–0.51 in)
3 Wiring through a M16×1.5 gland or conduit fitting NPT 1/2″
   - Cable diameter for M16 gland: 2–6 mm (0.08–0.24 in)

If you are using a 24 V AC power supply for the transmitter, make sure to use separate cables for the AC power and the analog outputs to ensure that the EMC requirements are fulfilled.

3.4.3 Wiring from the back

1. Before connecting wires or cables, make sure that the transmitter is powered off.
2. Open the transmitter cover, if not already open.
3. Remove the center of the rubber lead-through to fit your cable through the opening. Use, for example, a small screwdriver to thrust the small round center piece off.
4. Lead the cable through the opening.

   CAUTION! To preserve the IP rating of the transmitter, the back of the transmitter must rest flat on the installation surface. Make sure that you route the cable so that it does not push the back of the transmitter off the installation surface.

5. Connect the wiring to the applicable screw terminals.
6. Fit the cable under the strain relief clip next to the rubber lead-through, as applicable. You can also use the clip with a cable tie.
7. Reattach the transmitter cover.

   Tighten the screws hand-tight using the 4-mm Allen key (recommended tightening torque 3.6 Nm).
8. If you wire only through the back, plug or seal the unused lead-throughs on the bottom.

3.4.4 Wiring through bottom lead-throughs

1. Before connecting wires or cables, make sure that the transmitter is powered off.
2. Open the transmitter cover, if not already open.
3. Open the cable gland and insert a suitable length of the cable inside the transmitter through the gland.
4. Connect the wiring to the applicable screw terminals.
5. Tighten the cable gland. Avoid overtightening.
   - Tightening torque for M20 gland: 8 Nm
   - Tightening torque for M16 gland: 6 Nm
6. Reattach the transmitter cover.

   Tighten the screws hand-tight using the 4-mm Allen key (recommended tightening torque 3.6 Nm).
7. Plug or seal the unused lead-throughs.

3.5 Finalizing installation

After mounting and wiring the transmitter, do these final steps to have your transmitter ready for use.

1. Verify the tightness of the cable glands. Pull on the cable to verify that the cable is securely held by the cable gland.
2. To ensure that the transmitter operates as intended, Vaisala recommends grounding the transmitter. Connect the grounding terminal on the bottom of the transmitter to the grounding element of the installation site with a grounding wire.
3. Switch on the power supply input.
4. Connect the probe to the transmitter.

5. If you want your transmitter to get error log time stamps and calibration reminders for the connected probe, connect the transmitter to the Insight PC software or the Indigo80 handheld indicator for automatic date and time setup.

> Date and time setup is needed for calibration reminders and error log time stamping to work.

More information

- Verifying tightness of cable glands (page 31)
- Attaching grounding (page 31)
- Connecting probes (page 32)
- Connecting to Insight PC software (page 36)
- Connecting Indigo300 to Indigo80 handheld indicator (page 43)

3.5.1 Verifying tightness of cable glands

- Adjustable wrench

To maintain enclosure tightness and provide strain relief to the cables, all cable glands must be tightened. Unused cable glands must remain plugged.

1. Check every cable gland that is in use:
   a. Pull on the cable to verify that the cable is securely held by the cable gland.
   b. Tighten the cable gland if the cable moves.
2. Check that every unused cable gland is plugged and tightened.

3.5.2 Attaching grounding

- 4-mm Allen key, provided

To ensure that the transmitter operates as intended, Vaisala recommends grounding the transmitter. Connect the grounding terminal on the bottom of the transmitter to the grounding element of the installation site with a grounding wire.

Alternatively, you can ground the transmitter from the inside using the designated terminal in the power supply input terminal block.

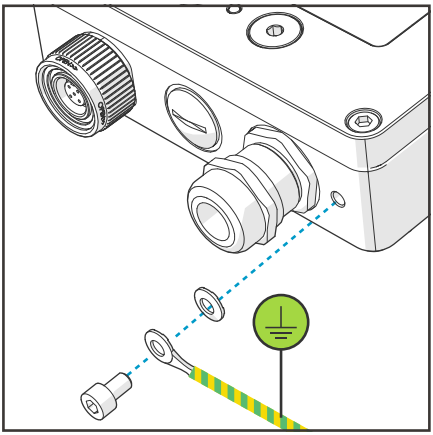

Figure 14 Indigo300 grounding using external grounding terminal

1. Detach the grounding terminal screw and washer.
2. Place the cable lug of the grounding wire between the washer and the screw.
3. Tighten the screw to 3.6 Nm.

After grounding the transmitter, switch on the power supply input.

More information

- Power supply input terminals (page 27)

3.6 Connecting probes

CAUTION! Only connect compatible measurement devices to the transmitter. Attempting to connect incompatible devices or cables can damage the equipment. Refer to transmitter specifications for compatibility information.

Probes and probe cables can be connected to the transmitter both when it is powered on and when it is powered off.

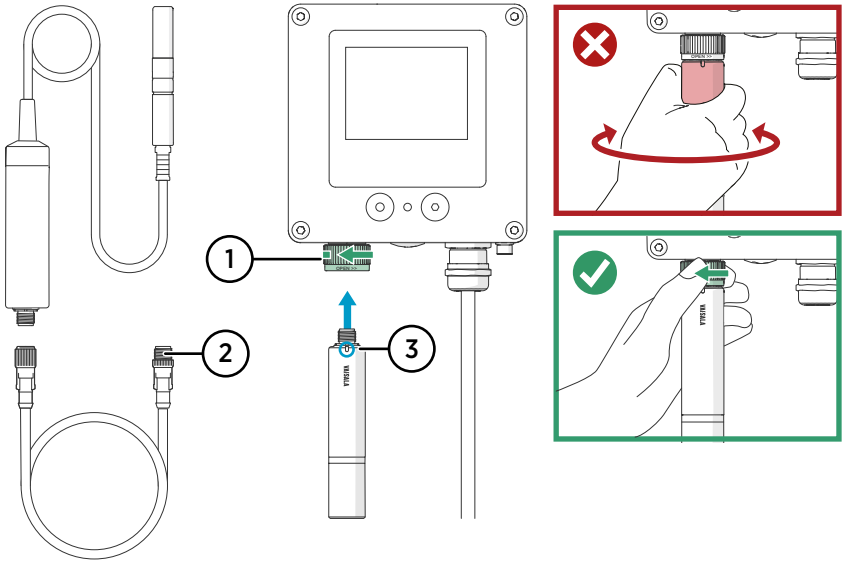

Figure 15 Connecting probes to Indigo300 transmitter

1 Probes are locked in place with the locking wheel. **Never turn from the probe body.**
2 Probe connection cables are connected in the same way as probes: insert the cable in the connector and hold in place while turning the locking wheel.
3 Probes are inserted into the probe connector with the orientation mark and/or the Vaisala logo facing out.

1. Insert the probe into the probe connector with the orientation mark and/or the Vaisala logo on the probe body facing out. Note the orientation of the cable connector pins when inserting.
2. Hold the probe in the probe connector and lock it in place by turning the locking wheel **counterclockwise**.
3. When the transmitter recognizes the connected probe, it shows a notification message on the display (for example, **Probe Connected: GMP251**).

3.7 Example of installation in tight spaces

To optimize the usage of space around the transmitter, you can connect the probe to the transmitter using a cable and mount the probe body to a suitable spot using a probe holder (Vaisala item code ASM213582). The probe holder is compatible with Ø 25 mm (0.98 in) probe bodies.

Figure 16 (page 34) shows an example installation with a short open-ended cable, which is wired to the transmitter through a cable gland.

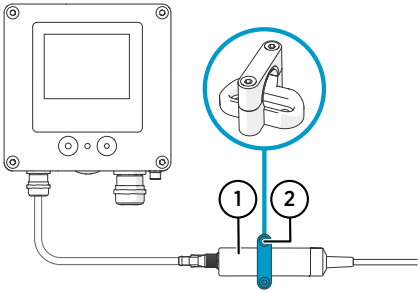

Figure 16 Example of installation in tight space

1 Ø 25 mm (0.98 in) probe body
2 Probe holder ASM213582

The probe connection type (locking wheel or cable gland) is selected when ordering the transmitter. Probe connection cables of different lengths are available as accessories.

For more detailed information on the probe holder, see your probe's user documentation at docs.vaisala.com.

4. Using transmitter with Insight PC software

4.1 Vaisala Insight PC software

Vaisala Insight PC software is a configuration software for Vaisala Indigo-compatible probes and transmitters. Insight is available for the Windows operating system (64-bit only). For a full list of supported operating system versions, see vaisala.com/insight.

To ensure support for your transmitter, download the latest version of Insight at vaisala.com/insight.

With the Insight PC software connected to your transmitter, you can:

- See real-time measurements and device and status information
- Configure, test and adjust the analog output channels of the transmitter
- Calibrate and adjust the probe connected to the transmitter
- Configure the transmitter settings (for example, display settings and metric/non-metric units of measurement parameters)
- Configure the connected probes' features and settings. The available features and settings depend on the probe model and firmware version. For more information, see your probe's user documentation at docs.vaisala.com.

CAUTION! The service port connection is only intended for temporary use during configuration, and must not be used for permanent installations. The IP rating and EMC properties of the transmitter can be affected when the service port is open.

To connect the Indigo transmitter to the Vaisala Insight PC software, you must have the Vaisala USB Device driver installed on your computer.

More information

- Connecting to Insight PC software (page 36)
- Configuring analog outputs with Insight PC software (page 48)
- Calibration and adjustment with Insight PC software (page 55)

4.2 Connecting to Insight PC software

- 4-mm Allen key, provided
- Computer with a Microsoft Windows® operating system (64-bit version) and Vaisala Insight PC software installed
- Vaisala Indigo USB adapter (Vaisala item code USB2) and M12 - M8 service cable (Vaisala item code 262195)
- Vaisala USB Device driver installed

CAUTION! Use only cables provided by Vaisala to connect devices to the transmitter. Attempting to connect incompatible devices or cables can damage the equipment.

CAUTION! The service port connection is only intended for temporary use during configuration, and must not be used for permanent installations. The IP rating and EMC properties of the transmitter can be affected when the service port is open.

Upon connecting, the transmitter receives date and time settings from Insight.

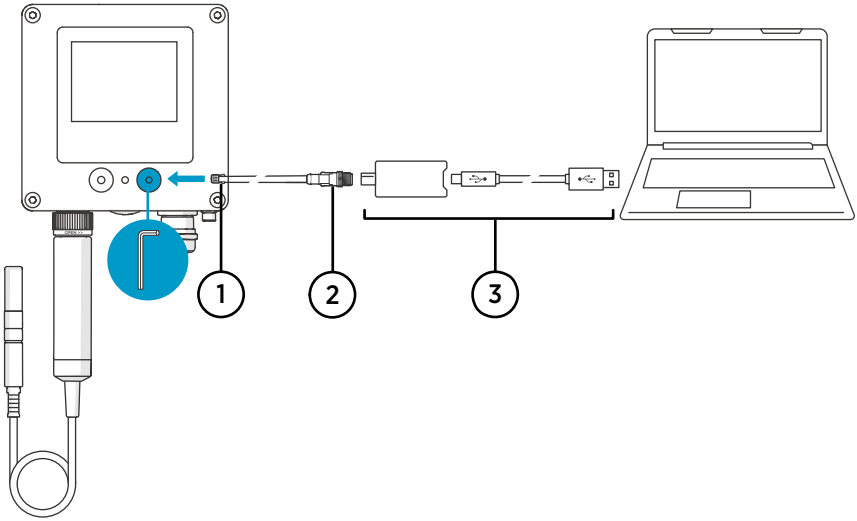

Figure 17 Connecting Indigo300 transmitter to Insight PC software

1 M8 connector of the service cable
2 M12 connector of the service cable
3 USB adapter

1. Open the protective cover of the transmitter service port using the 4-mm Allen key.
2. Connect the M8 connector of the service cable to the service port.
3. Connect the USB adapter to the M12 connector of the M12 - M8 service cable (262195).
4. Connect the USB adapter to a free USB port on the PC.
5. Open the Insight software on your computer.
6. Wait for the Insight software to detect the transmitter.

More information

- Installation workflow (page 20)

4.2.1 Installing driver for the USB service cable

Only Windows® operating systems are supported by the driver of the USB service cable.

1. Connect the USB service cable to a USB port on your computer. Windows® detects the new device and installs the appropriate driver.
2. Open **Device Manager** from the Windows® Start menu. Use search to find it if necessary (search for "device").
3. Locate the cable in the list of devices:
   - If the device is listed as **Vaisala USB Device** with a COM port number in brackets, the cable is ready for use.
   - If the device is listed as **Vaisala USB Instrument Cable** without a COM port number listed, you must install the driver manually.

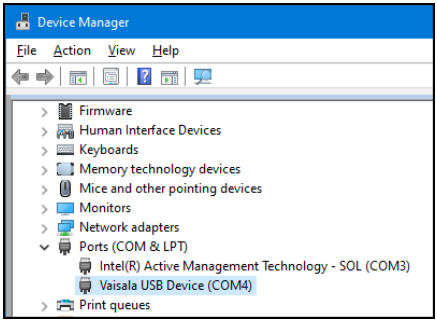

4. To install the driver manually:
   a. Disconnect the USB service cable from the computer.
   b. Download the Vaisala USB driver at vaisala.com/software (select the appropriate USB Instrument Driver Setup for your cable).
   c. Extract the driver zip file and run the USB driver installation program *`Vaisala USB Device Driver Setup.exe`*. Accept the installation defaults.
   d. Go back to step 1 and verify that the driver installation works as expected.

4.3 Insight PC software overview

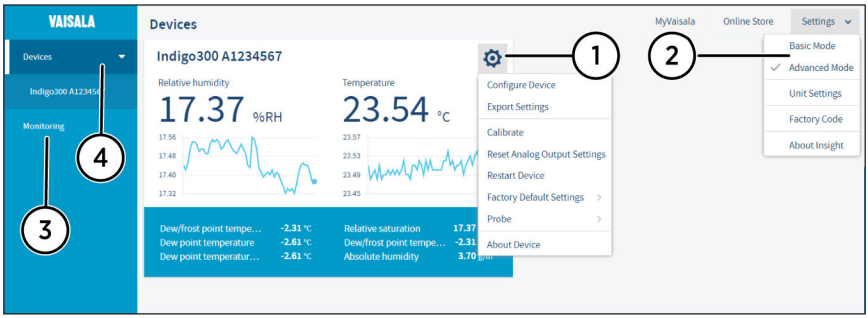

Figure 18 Insight software main menu view with transmitter and connected probe

1 Select ⚙ to access Insight main menu.
   - **Configure device**: display and graph options, output and relay settings (if applicable), parameter and unit selection, environmental compensation settings, filtering factor, probe options, and general settings.
   - **Export settings**: creates a text file export of the device settings.
   - **Calibrate**: options for calibrating and adjusting the measurement of the connected probe, adjusting outputs, viewing adjustment data, and restoring factory adjustments.
   - Various reset, factory default settings, and restart options for transmitter and probe.
   - **About device**: general device information such as serial number and software version.
2 Select **Settings** to switch between the **Basic mode** and **Advanced mode** user modes, change the units of parameters (metric/non-metric), enter a factory code to access restricted functionalities, or view information about the Insight software.
3 **Monitoring** provides options for monitoring and recording selected parameters, and exporting the monitoring data as a CSV (comma-separated values) file.
4 Device information menu with the following tabs:
   - **Measurements**: measurement graph view with parameter drop-down selection.
   - **Calibration information**: read-only information about the latest stored calibration.
   - **Diagnostics**: troubleshooting and administrative information about the device status. Also includes options for exporting the device error log and other diagnostics information as files (CSV/ZIP). When contacting Vaisala support, it is recommended to include an up-to-date export of the error log with the support request.

4.3.1 Unit settings

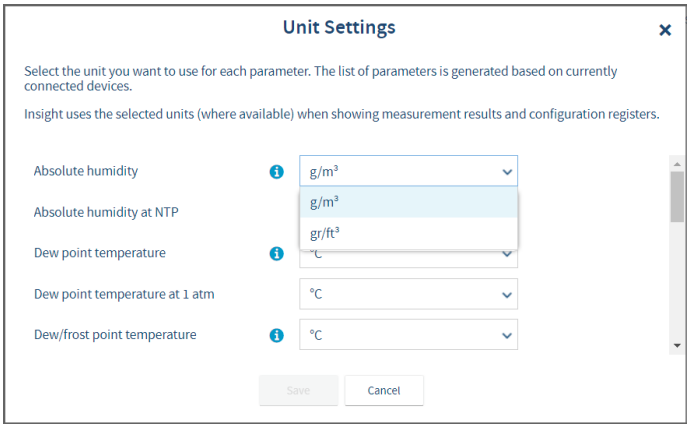

Figure 19 Unit selection example with humidity and temperature probe

You can change the units of the measurement parameters in the **Settings** menu accessible from the Insight PC software main view.

> The unit selection has an effect on entering configuration values (for example, whether you must enter analog output scale settings as ppm or % values).

5. Using transmitter with Indigo80 handheld indicator

5.1 Indigo80 handheld indicator

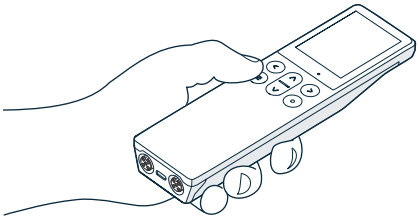

Figure 20 Indigo80 handheld indicator

Vaisala Indigo80 Handheld Indicator is a portable diagnostics tool that accommodates up to two compatible Vaisala devices for measuring a wide range of parameters.

With the indicator, you can:

- See real-time measurements and device and status information
- Log measurement data from the probes connected to the transmitter
- Calibrate and adjust the connected probes
- Configure, test and adjust the analog output channels of the transmitter
- Configure the transmitter settings (for example, display settings and metric/non-metric units of measurement parameters)
- Configure the connected probes' features and settings. The available features and settings depend on the probe model and firmware version. For more information, see your probe's user documentation at docs.vaisala.com.

In addition, you can also use the Indigo80 indicator for powering up the transmitter temporarily. Note that depending on the probe connected to the transmitter, the Indigo80 battery may be consumed faster than normally when the transmitter is powered by Indigo80.

The help tours in the indicator's user interface guide you through the key features of the indicator. You can access the tours in the **Help** menu by pressing the ☰ button.

For more information on using the indicator, for example, editing the measurement views and performing data logging, see Indigo80 User Guide (M212722EN).

More information

- Connecting Indigo300 to Indigo80 handheld indicator (page 43)
- Selecting parameters and units shown on transmitter display (page 45)
- Configuring analog outputs with Indigo80 handheld indicator (page 51)
- Calibration and adjustment with Indigo80 handheld indicator (page 62)

5.1.1 Device compatibility

For information on the device firmware versions tested for compatibility with the Indigo80 handheld indicator, see Indigo80-compatible Firmware Technical Note (M212901EN).

5.1.2 Indigo80 keypad

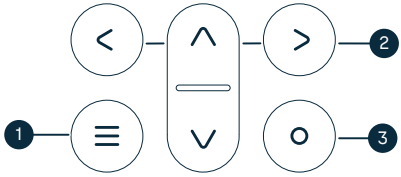

Figure 21 Indigo80 keypad

1 Power on/off and main menu button
2 Arrow buttons for navigating menus and scrolling views
3 Select button for selecting items in the user interface

5.1.3 Indigo80 main menu

Pressing the button while navigating the Indigo80 menus and views opens the main menu.

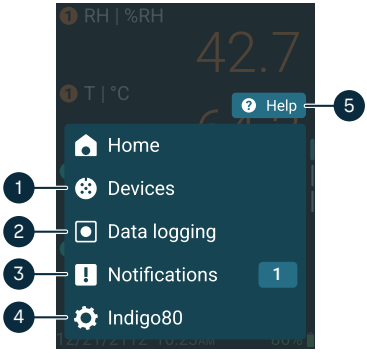

Figure 22 Indigo80 main menu

1 **Devices** menu contains, for example, options related to sensor purge, calibration, and environment settings (depending on the connected device).
2 **Data logging** menu for setting logging interval and duration, and browsing data files.
3 **Notifications** menu displays notifications related to Indigo80 and the connected devices.
4 **Indigo80** menu for changing the settings of Indigo80 (for example, date, time, and language) and viewing device information.
5 **Help** menu contains tours showing the key features of Indigo80, as well as instructions for sending devices to Vaisala for calibration and maintenance.

5.2 Connecting Indigo300 to Indigo80 handheld indicator

- 4-mm Allen key, provided
- M12 - M8 service cable (Vaisala item code 262195)

CAUTION! Use only cables provided by Vaisala to connect devices to the transmitter. Attempting to connect incompatible devices or cables can damage the equipment.

CAUTION! The service port connection is only intended for temporary use during configuration, and must not be used for permanent installations. The IP rating and EMC properties of the transmitter can be affected when the service port is open.

Upon connecting, the transmitter receives date and time settings from Indigo80.

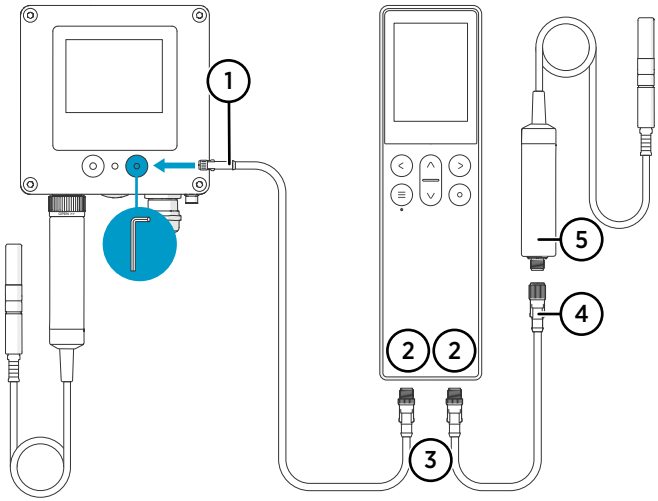

Figure 23 Connecting Indigo300 transmitter to Indigo80 handheld indicator

1 M8 connector of the service cable
2 M12-5F ports on the bottom of Indigo80 for connecting compatible Vaisala devices. Ports are labeled ❶ (left) and ❷ (right) on Indigo80.
3 M12-5M cable connector
4 M12-5F cable connector
5 Probe (HMP7) connected to Indigo80, for example, for use as a calibration reference

1. Open the protective cover of the transmitter service port using the 4-mm Allen key.
2. Connect the M8 end of the service cable to the service port.

3. Connect the M12 end of the cable to the desired port on the bottom of the indicator. You can select the port freely based on your set of connected devices.

   - **Note the orientation of the cable connector when inserting it**
   - **Hold the connector in place while turning its locking ring clockwise – never twist the connector body!**

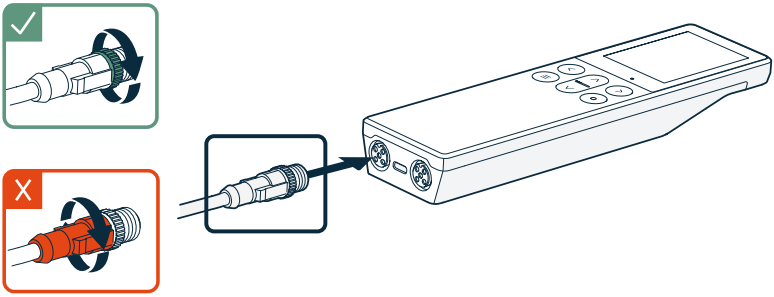

4. Wait for the indicator to detect the transmitter.

   When the indicator recognizes the connected transmitter, it shows a notification on the display. On the transmitter display, the active connection symbol ⇄ appears.

More information

‣ Installation workflow (page 20)

5.3 Selecting parameters and units shown on transmitter display

If your transmitter model has a display, you can use the Indigo80 handheld indicator to select which measurement parameters from the probe connected to the transmitter are shown on the display.

You can also change the units of measurement parameters. For example, you can change the temperature unit from Celcius (°C) to Fahrenheit (°F). You can also change the units to metric/non-metric all at once.

> The unit selection has an effect on entering configuration values (for example, whether you must enter analog output scale settings as ppm or % values).

To select the parameters and units shown on the transmitter display:

1. Connect the transmitter to the indicator.
2. Open the indicator main menu by pressing ☰.

3. Select **Devices**. If you have more than one device connected to the indicator, make a further selection between the devices.

   In this case, select **Indigo300**.
4. Select **Settings > Displayed parameters**.
5. In **Display parameter 1**, **2**, and/or **3**, select the parameter you want.

   The selectable parameters depend on the probe.
6. To change the units of measurement parameters:
   - To change units of individual parameters, select **Settings > Displayed units**, and then select the parameter of your choice, for example, **Temperature**.
   - To change all applicable units to metric/non-metric, select **Settings > Display > Units > Metric** or **Non-metric**.
7. Exit the menu by pressing ⊂ or return to the main menu by pressing ☰.

The selected parameters and units will appear on the transmitter display. The measurement and graph views shown on the Indigo80 display are not affected.

More information

- Transmitter display (page 14)
- Connecting Indigo300 to Indigo80 handheld indicator (page 43)

5.4 Selecting parameters and units shown on Indigo80 display

Besides the transmitter display, you can view selected measurement parameters and units on the Indigo80 display. This way it is also possible to view measurement data from the probe connected to a non-display transmitter.

To select the parameters and units shown on the Indigo80 display:

1. Connect the transmitter to the indicator.
2. Press ☰ on the indicator keypad and select **Home** in the main menu.
3. Press ⊙ to open the shortcut menu for editing the measurement views of Indigo80.
4. Choose **Add view** or **Edit view**.
   - Select **Add view** to create new measurement views based on templates.
   - Select **Edit view** to add new parameters into an existing view (space allowing), or to delete parameters from a view.
5. To change the units of measurement parameters:
   - To change units of individual parameters, press ☰ and select **Indigo80 > Units > Units per parameter**.
   - To change all applicable units to metric/non-metric, press ☰ and select **Indigo80 > Units > Preferred units**.

For more detailed information on the measurement and graph views shown on the Indigo80 display, see Indigo80 User Guide (M212722EN).

More information

- Connecting Indigo300 to Indigo80 handheld indicator (page 43)

6. Configuring analog outputs

6.1 Configuring analog outputs with Insight PC software

6.1.1 Analog output configuration overview

The transmitter has 3 analog outputs that can be configured with the Insight PC software. Each output has the same set of configuration options in the analog output 1–3 menus under the **Configure device** menu (**Analog output 1** shown in example).

> The available selections depend on the probe that is connected to the transmitter (for example, CO_2 output parameter selection is only available for CO_2 probes).

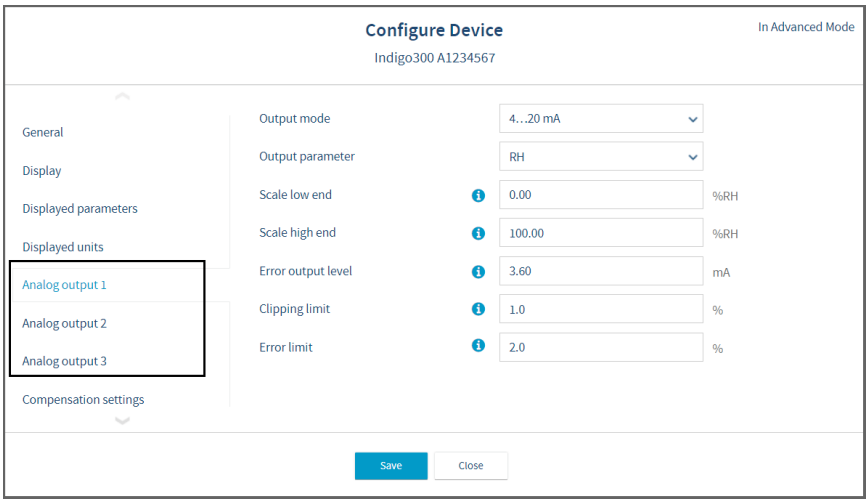

Figure 24 Analog output configuration options example in Insight

The **Analog output type** selection in the **General** menu defines whether the outputs are used for voltage or current output. When you change the output type, Insight reloads the transmitter.

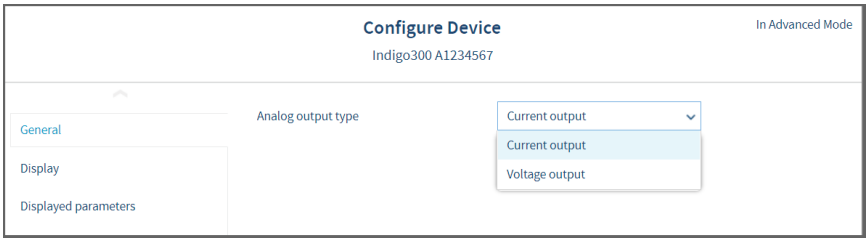

Figure 25 Analog output type (current or voltage) selection in Insight

Receiving analog output settings automatically from probe

The transmitter can receive the analog output settings automatically from the connected probe in the following cases:

1. The transmitter is a new unit and has not been configured yet.
2. The user has removed the analog output configuration from the transmitter.

> After connecting a probe, it is recommended to always review the analog output settings with the Insight PC software or Indigo80 handheld indicator.

6.1.2 Analog output configuration example

This example shows how to use Insight to configure analog output 1 of the transmitter to use the following settings when a humidity and temperature probe is connected to the transmitter:

- 4–20 mA current output
- Relative humidity measurement scaled to 0–100 %RH
- Clipping limit 0 %, error limit 5 %, and error output 3.6 mA

1. Connect the transmitter to the Insight software.
2. Select ⚙ and open the **Configure device** menu.
3. Open the **General** menu and select **Current output** from the dropdown. Store your selection with **Save**.
4. Return to the **Configure device** menu and select one of the 3 analog outputs.
5. Select **4 ... 20 mA** from the **Output mode** dropdown.
6. Select **RH** from the **Output parameter** dropdown.
7. Type **0** in the **Output low end** field.
8. Type **100** in the **Output high end** field.
9. Type **3.6** in the **Error output level** field.
10. Type **0** in the **Clipping limit** field and **5** in the **Error limit** field.

11. Select **Save** to take your configuration into use.

More information

- Connecting to Insight PC software (page 36)

6.1.3 Clearing transmitter analog output configuration

If you need to restore the transmitter to a state where no analog output configuration exists in the transmitter, you can clear the current configuration from the Insight main menu.

When you remove the analog output configuration from the transmitter, the transmitter automatically adapts the analog output settings of the next probe you connect to it.

1. Connect the transmitter to the Insight software.
2. Select ⚙ to open the Insight main menu.
3. Select **Reset analog output settings** and then select **Yes**. Insight displays a message that notifies about the settings being cleared.

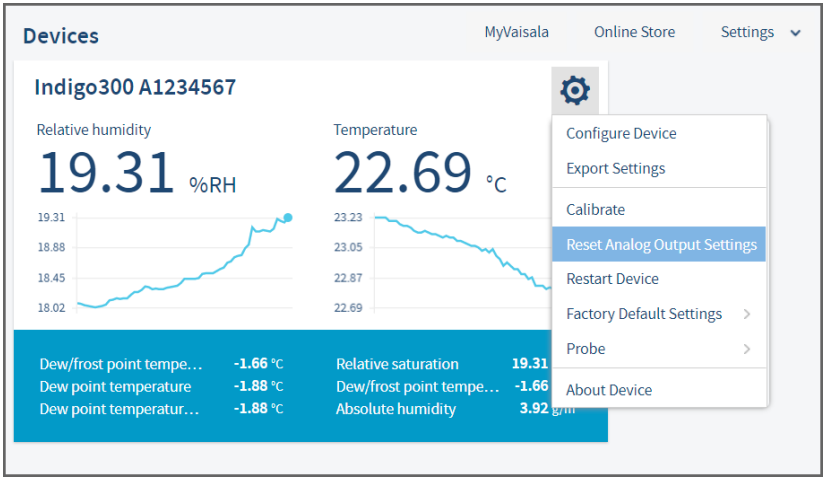

More information

- Connecting to Insight PC software (page 36)

6.2 Configuring analog outputs with Indigo80 handheld indicator

6.2.1 Analog output configuration overview

The transmitter has 3 analog outputs that can be configured with the Indigo80 handheld indicator. Each output has the same set of configuration options in the **Devices > Settings** menu of the indicator.

> The available selections depend on the probe that is connected to the transmitter (for example, CO_2 output parameter selection is only available for CO_2 probes).

The **Analog output type** selection in the **Settings** menu defines whether the outputs are used for voltage or current output. When you change the output type, Indigo80 reloads the transmitter.

6.2.2 Analog output configuration example

This example shows how to use Indigo80 to configure the transmitter's analog output 1 to use the following settings when a humidity and temperature probe is connected to the transmitter:

- 4 ... 20 mA current output
- Relative humidity measurement scaled to 0–100 %RH
- Clipping limit 5 %, error limit 10 %, and error output 3.6 mA

1. Connect the transmitter to the indicator.
2. Open the indicator main menu by pressing ☰.
3. Select **Devices**. If you have more than one device connected to the indicator, make a further selection between the devices.

   In this case, select **Indigo300**.
4. Select **Settings**.
5. In **Analog output type**, select **Current output**.
6. Indigo80 reloads the transmitter. Reselect **Devices > Indigo300 > Settings**.
7. Scroll down and select **Analog output 1**.
8. In **Output mode**, select **4...20 mA**.
9. In **Output parameter**, select **Relative humidity**.
10. Select **Output low end**. Use the arrow buttons to set the value as **0.00**, and then select **Set**.
11. Select **Output high end**. Use the arrow buttons to set the value as **100.00**, and then select **Set**.
12. Select **Error output level**. Use the arrow buttons to set the value as **3.60**, and then select **Set**.

13. Select **Clipping limit**. Use the arrow buttons to set the value as **5.0**, and then select **Set**.
14. Select **Error limit**. Use the arrow buttons to set the value as **10.0**, and then select **Set**.

    Your configuration is now in use.
15. Exit the menu by pressing ⊂ or return to the main menu by pressing ☰.

More information

- Connecting Indigo300 to Indigo80 handheld indicator (page 43)

6.2.3 Clearing transmitter analog output configuration

If you need to restore the transmitter to a state where no analog output configuration exists in the transmitter, you can clear the current configuration with the Indigo80 handheld indicator.

> When you remove the analog output configuration from the transmitter, the transmitter automatically adapts the analog output settings of the next probe you connect to it.

1. Connect the transmitter to the indicator.
2. Open the indicator main menu by pressing ☰.
3. Select **Devices**. If you have more than one device connected to the indicator, make a further selection between the devices.

   In this case, select **Indigo300**.
4. Select **Reset analog output settings > OK**.
5. Confirm by selecting **OK**.
6. Exit the menu by pressing ⊂ or return to the main menu by pressing ☰.

More information

- Connecting Indigo300 to Indigo80 handheld indicator (page 43)

6.3 Analog output overrange behavior

The analog output has a defined behavior when the measured values are outside the scaled analog output range. At first, the output is clipped when the measurement exceeds a set limit (the measurement continues, but the output does not change from the clipped value).

When the measurement exceeds the second limit (error limit), the analog output switches to the error state defined for the output.

The same clipping and error limits are applied when the measured value drops back to the scaled range: at first the output returns to the clipped value from the error state, and then to normal output.

6.3.1 Analog output overrange example

This example describes the analog output overrange behavior when an output uses a range of 0–5 V, scaled to 0–200 000 ppm (= 0–20 %) CO_2. The error output level is set to 6 V, clipping limit is set to 5 % overrange, and error limit is set to 10 % overrange. CO_2 concentrations (ppm) are indicated for the clipping point and error limit point.

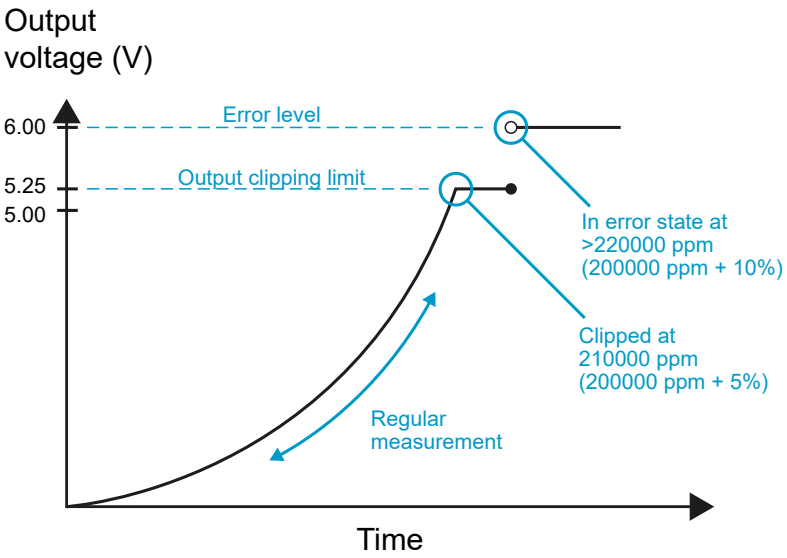

Figure 26 Analog output overrange behavior example

- When the measured CO_2 rises above 20 %, the output rises above 5 V.
- The output keeps rising until the measurement is 21 %CO_2, at which point the probe outputs 5.25 V.
- If the CO_2 level rises above 21 %CO_2, the output still remains at 5.25 V.
- If the CO_2 level rises above 22 %CO_2, the output enters the error state, which is 6 V for the 0–5 V output.

7. Calibration and adjustment

7.1 Calibration and adjustment overview

Calibration means comparing the measurement output of the device to a known reference, such as a known environment in a calibration chamber or the output of a reference instrument. Correcting the reading of the device so that it measures accurately is referred to as **adjustment**.

Vaisala recommends sending the probe connected to the transmitter regularly to Vaisala for factory calibration. The probe is calibrated and adjusted at multiple points along its measurement range. Factory calibration always includes a traceable calibration certificate and adjustment, if needed. You can also send the transmitter to Vaisala for calibrating and adjusting the transmitter's analog output channels.

Factory calibration leads to highest accuracy and lowest uncertainty. After factory calibration the instrument performs as new. For up-to-date information about calibration points and offering, visit store.vaisala.com.

WARNING! When returning a product for calibration or repair, make sure it has not been exposed to dangerous contamination, and is safe to handle without special precautions.

It is also possible to adjust the probe and the transmitter's analog output channels on the field using the Insight software or the Indigo80 handheld indicator.

If you think the device is not measuring correctly, calibration and adjustment is not the first thing to do. Check the following first:

- Make sure nothing is interfering with the measurement: heat sources, temperature differences, or condensation.
- Check that there is no moisture on the probe. If the sensor has become wet, wait for it to dry.
- Always wait for the measurement to stabilize.

More information

- Calibration and adjustment with Insight PC software (page 55)
- Calibration and adjustment with Indigo80 handheld indicator (page 62)

7.2 Calibration and adjustment with Insight PC software

7.2.1 Calibration overview

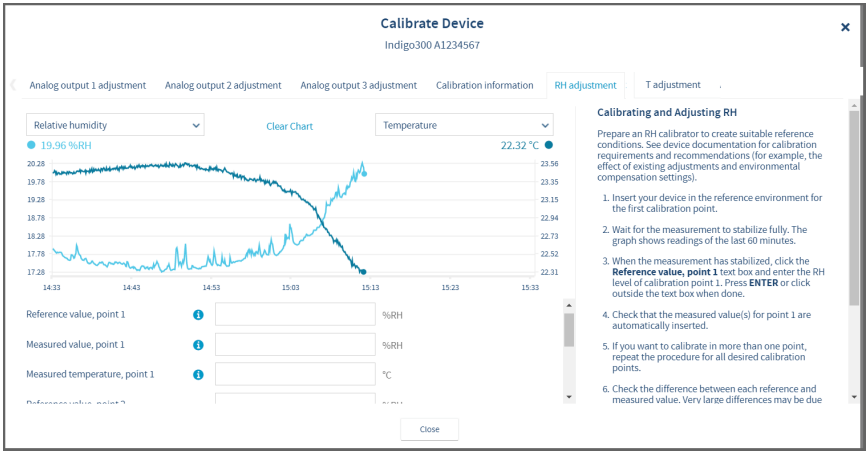

Figure 27 Insight calibration menu main view (humidity and temperature probe)

The range of available options (for example, environmental compensations and the number of adjustment points) varies depending on the features of the connected probe.
The menu examples presented here are examples of calibration options that are available when a humidity and temperature probe is connected to the transmitter.

CAUTION! Before adjusting a probe's measurement, make sure that you have familiarized yourself with the probe-specific calibration requirements such as possible adjustment limits and environmental compensation interdependencies. See the user documentation of the probe for probe-specific information.

Starting calibration

To open the calibration menu, select ⚙ to access Insight main menu. In the main menu, select **Calibrate**.

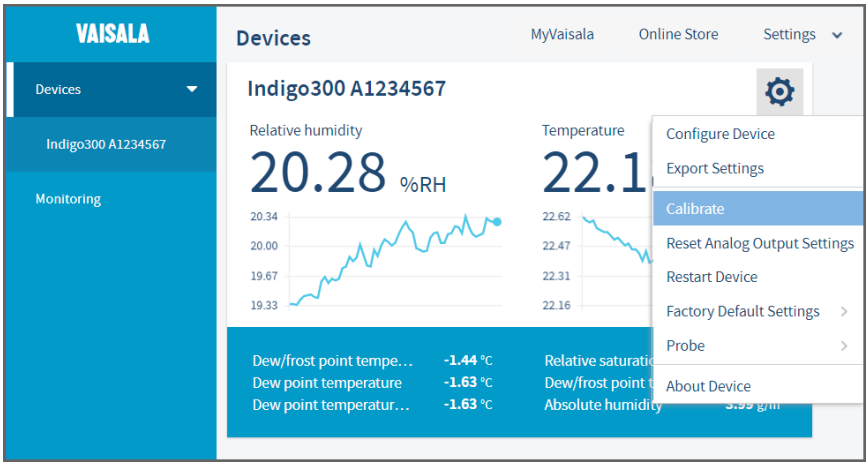

Figure 28 Insight **Calibrate** menu selection

Restoring factory adjustment

Before adjusting the probe measurement, you can remove any possible earlier adjustments with the **Restore factory adjustment** selection, if needed.

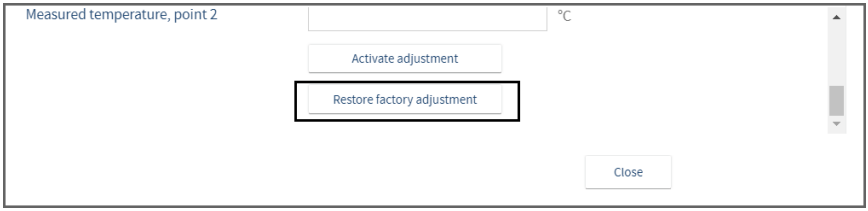

Figure 29 Insight **Restore factory adjustment** selection

7.2.2 Environmental compensation

When making adjustments, you can enter information about the environment in which you perform the adjustment. This allows compensating for environmental factors that have an effect on the measurement (for example, temperature, pressure, or background gases).

The selection of environmental compensations available in the Indigo transmitter configuration menus depends on the features and configuration of the connected probe. If the probe you have connected to the transmitter supports environmental compensations, the configuration options are shown in the **Configure device** menu accessible from the Insight PC software main view. For information and instructions on the environmental compensation features of the probe, see the user documentation of the probe you are using.

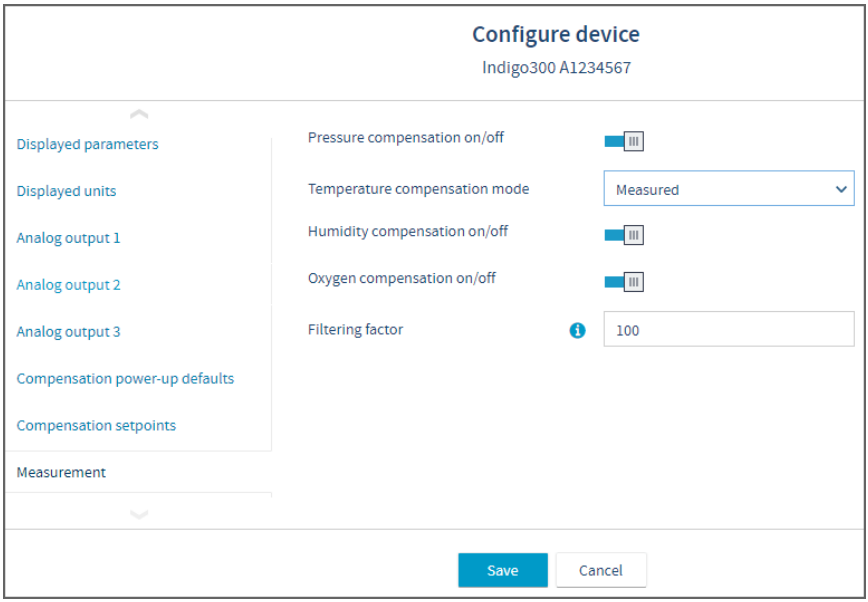

Figure 30 Insight environmental compensation configuration example with CO_2 probe

7.2.3 CO_2 probe adjustment example

Prepare a calibration gas or similar to create suitable reference conditions. See device documentation for calibration requirements and recommendations (for example, the effect of existing adjustments and environmental compensation settings).

To adjust the CO_2 measurement of the probe that is connected to the transmitter:

1. Before starting the adjustment, make sure that your environmental compensation settings (for example, the relative humidity and oxygen concentration values given as the current operating environment) are correct for your present environment. You can review and change the environmental settings in the **Configure device** menu.
2. To open the Insight PC software calibration menu, select ⚙ to access Insight main menu. In the main menu, select **Calibrate**.
3. Select **CO_2 adjustment**.
4. Insert the probe in the reference environment for the first calibration point.
5. Wait for the measurement to stabilize fully. The graph shows readings of the last 60 minutes.
6. When the measurement has stabilized, click the **Reference value, point 1** text box and enter the CO_2 level of calibration point 1. Press **Enter** or click outside the text box when done.

7. Check that the measured value for point 1 is automatically inserted.
8. If you want to calibrate in more than one point, repeat the procedure for all desired calibration points.
9. Check the difference between each reference and measured value. Very large differences may be due to insufficient stabilization time or unsuitable calibration setup.

   If you want to adjust the device, select **Activate adjustment**.
   To exit without taking the adjustment in use, select **Close**.
10. After calibrating your device, update the information in the **Calibration information** tab.

7.2.4 Analog output adjustment

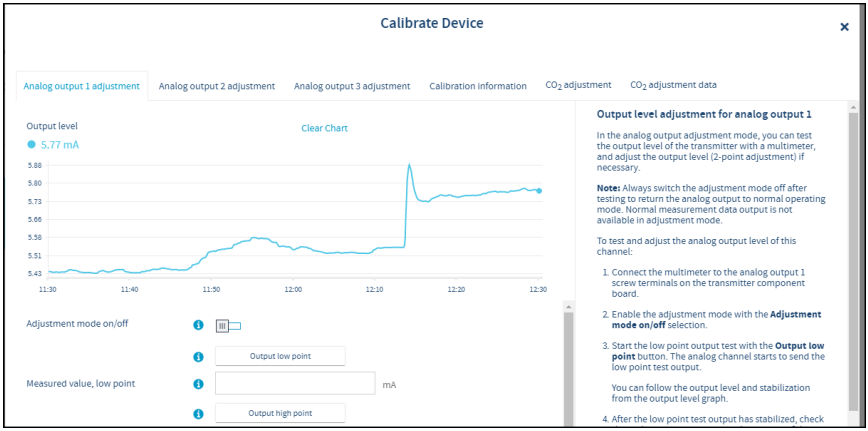

Figure 31 Insight analog output adjustment view

If the analog output appears to be inaccurate, you can test and adjust the output level in the calibration menu of the Insight PC software. Note that each of the 3 analog output channels is adjusted separately. To carry out the adjustment, you need a multimeter (or an alternative method for reading the analog output level) to verify the transmitter test output level.

During the adjustment, the output of the transmitter's analog output channels is forced to a fixed current or voltage level. The adjustment is a 2-point adjustment with a low point test output and a high point test output: the fixed test output levels are listed in Table 7 (page 58).

Table 7 Transmitter analog channel fixed test output levels

Current and voltage test output points	Fixed test output level
Low point test output for current output	4 mA
High point test output for current output	20 mA

Current and voltage test output points	Fixed test output level
Low point test output for voltage output	1 V
High point test output for voltage output	10 V

CAUTION! Always switch the Insight analog output adjustment mode off after testing or adjusting to return the output to normal operating mode. Normal measurement data output is not available in the adjustment mode.

7.2.4.1 Analog output adjustment example

CAUTION! Always switch off the transmitter power supply when connecting or disconnecting screw terminal wiring. Do not energize the transmitter power supply when wiring is not connected.

CAUTION! Always switch the Insight analog output adjustment mode off after testing or adjusting to return the output to normal operating mode. Normal measurement data output is not available in the adjustment mode.

To test and adjust the voltage output level of the transmitter's analog output 1 with Insight:

1. Switch off the transmitter power supply and open the transmitter cover.
2. Connect the multimeter wiring to analog output 1 screw terminals and close the transmitter cover.
3. Power on the transmitter and connect the transmitter to Insight PC software.
4. To open the calibration menu, select ⚙ to access Insight main menu. In the main menu, select **Calibrate**.
5. Select **Analog output 1** and enable the adjustment mode with the **Adjustment mode on/off** selection.
6. Start the low point output test with the **Output low point** button. The analog channel starts to send the low point test output (1 V in this example).
7. After the low point test output has stabilized, check the multimeter reading. Enter the reading of the multimeter in the **Measured value, low point** field.
8. Start the high point output test with the **Output high point** button. The analog channel starts to send the high point test output (10 V in this example).
9. After the high point test output has stabilized, check the multimeter reading. Enter the reading of the multimeter in the **Measured value, high point** field.
10. Select **Activate adjustment** to save the corrections to the output level.

    The corrections are shown in the **Low point offset** and **High point offset** fields.

11. To verify that the output level of the transmitter is now accurate, repeat the low point and high point output tests and check that the multimeter reading matches the test output.

    The adjustment date and information about the adjustment can be entered in the **Calibration date** and **Calibration text** fields.

12. Make sure that the adjustment mode is disabled with the **Adjustment mode on/off** selection and select **Close** to exit the calibration mode.
13. Switch off the power supply, remove the multimeter wiring and replace the analog output wiring.
14. After completing the wiring, close the transmitter cover and switch on the power supply.

More information

- Opening transmitter cover (page 20)
- Analog output terminals (page 28)
- Connecting to Insight PC software (page 36)

7.2.4.2 Testing analog output level in Diagnostics view

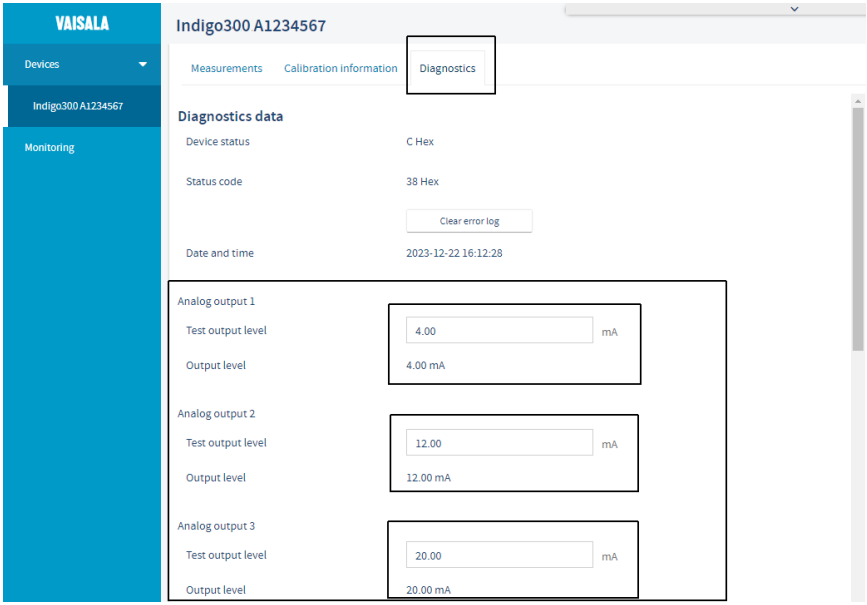

Figure 32 Insight Diagnostics view example with analog output test options

In addition to the analog output level test carried out when calibrating and adjusting the outputs (see Analog output adjustment (page 58)), you can also test the analog output level with any chosen value in the **Diagnostics** view of Insight PC software. Note that the Diagnostics view is only used for testing the output: adjustments must be carried out in the calibration menu.

CAUTION! Always switch off the transmitter power supply when connecting or disconnecting screw terminal wiring. Do not energize the transmitter power supply when wiring is not connected.

CAUTION! Always switch the analog output test mode off after testing. Normal analog output is not available in the test output mode.

1. Switch off the transmitter power supply and open the transmitter cover.
2. Connect the multimeter wiring to the analog output (1–3) screw terminals and close the transmitter cover.
3. Power on the transmitter and connect the transmitter to Insight PC software.
4. In the Insight main view, expand the **Devices** selection on the left panel, select your device and then select the **Diagnostics** tab.
5. In the **Diagnostics** tab, enter the analog output value you want to send as a test output in the **Test output level** field. Enter a test value for each analog output separately.
6. After entering the test output values, select **Save** to start sending the entered value as test output.
7. Wait for the output to stabilize and then check that the multimeter reading matches the entered test value.
8. If the output appears to be incorrect, see Analog output adjustment (page 58) for information on adjusting the output.
9. When you finish testing, clear all values from the **Test output level** fields and select **Save**. This stops the test output mode and returns the output back to normal use.
10. Switch off the power supply, remove the multimeter wiring and replace the analog output wiring.
11. After completing the wiring, close the transmitter cover and switch on the power supply.

7.3 Calibration and adjustment with Indigo80 handheld indicator

The **Devices > Calibrate / Adjust** menu of the Indigo80 handheld indicator provides options for calibrating and adjusting the measurement of the probe you have connected to the transmitter, and testing and adjusting the analog output channels of the transmitter. You can also view the current adjustment and restore the analog outputs' and connected probe's factory adjustments.

The range of available options (for example, environmental compensations and the number of adjustment points) varies depending on the features of the connected probe.

CAUTION! Before adjusting a probe's measurement, make sure that you have familiarized yourself with the probe-specific calibration requirements such as possible adjustment limits and environmental compensation interdependencies. See the user documentation of the probe for probe-specific information.

More information

- Relative humidity probe adjustment example (page 62)
- Restoring factory adjustment for analog outputs (page 63)
- Analog output adjustment (page 64)

7.3.1 Relative humidity probe adjustment example

- 4-mm Allen key, provided
- M12 - M8 service cable (Vaisala item code 262195)
- Previously collected calibration readings, for example, a calibration certificate

This procedure tells you how to use the Indigo80 handheld indicator to adjust the humidity measurement of the probe connected to the transmitter when you have a list of previously collected calibration readings available (for example, in a calibration certificate from a 3rd party laboratory calibration). You can adjust the probe without having to generate the calibration conditions and wait for stabilization.

If you adjust the probe using previously measured values, the device readings will be corrected and **your previous calibration certificate will not be valid anymore**. If an up-to-date calibration certificate is still needed, you must perform the calibration again to detect any remaining measurement error after the adjustment.

1. Connect the transmitter to the indicator.

2. Open the indicator main menu by pressing ☰.
3. Select **Devices**. If you have more than one device connected to the indicator, make a further selection between the devices.

   In this case, select the probe connected to the transmitter. For example, if the transmitter is connected to port **2** of Indigo80, the connected probe is identified with icon **2A** on the Indigo80 display.
4. If the probe connected to the transmitter supports the sensor purge feature, wait for the start-up purge to finish or start the purge manually by selecting **Devices > <your device> > Sensor purge**.
5. Select **Calibrate / Adjust**.
6. Select the type of calibration or adjustment to perform, for example, **RH adjustment**.
7. Select **Manual adjustment**.
8. Select **Reference value, point 1**.
9. Use the arrow buttons to set the reference value (for example, the reference humidity from your calibration certificate), and then select **OK** or **Set**.
10. Scroll down and select the **Measured value, point 1** field. Replace the automatically inserted value with your previously measured calibration reading (for example, the observed humidity value from your calibration certificate).
11. Scroll down and select the **Measured temperature, point 1** field. Select the correct unit, then replace the automatically inserted temperature value with your previously measured value (for example, the observed temperature value from your calibration certificate).

    Scroll down and repeat for **Reference value, point 2**, **Measured value, point 2**, and **Measured temperature, point 2** (if performing a 2-point adjustment).
12. To store the adjustments to the probe, scroll down and select **Activate adjustment > OK**. Confirm by selecting **OK**.

    To exit without taking the adjustment in use, press ☰ to end calibration.
13. Update the calibration information in **Calibrate / Adjust > Calibration information**. Navigate to the **Calibration information** menu by pressing ⊂.
14. Press ☰ to end calibration.

More information

- Connecting Indigo300 to Indigo80 handheld indicator (page 43)

7.3.2 Restoring factory adjustment for analog outputs

You can use the Indigo80 handheld indicator to restore the factory adjustment for the analog outputs of the transmitter.

Always restore factory adjustment before entering a new adjustment. This prevents any possible earlier adjustments having an effect on the new adjustment you make.

1. Connect the transmitter to the indicator.
2. Open the indicator main menu by pressing ☰.
3. Select **Devices**. If you have more than one device connected to the indicator, make a further selection between the devices.

   In this case, select **Indigo300**.
4. Select **Calibrate / Adjust**.
5. Select the desired output, for example, **Analog output 1 adjustment**.
6. Scroll down and select **Restore factory adjustment > OK**.
7. Confirm by selecting **OK**.
8. Exit the menu by pressing ⮜ or return to the main menu by pressing ☰.

More information

- Connecting Indigo300 to Indigo80 handheld indicator (page 43)

7.3.3 Analog output adjustment

If the analog output appears to be inaccurate, you can test and adjust the output level in the **Devices > Calibrate / Adjust** menu of the Indigo80 handheld indicator. Note that each of the 3 analog output channels is adjusted separately. To carry out the adjustment, you need a multimeter (or an alternative method for reading the analog output level) to verify the transmitter test output level.

During the adjustment, the output of the transmitter's analog output channels is forced to a fixed current or voltage level. The adjustment is a 2-point adjustment with a low point test output and a high point test output: the fixed test output levels are listed in Table 7 (page 58).

Table 8 Transmitter analog channel fixed test output levels

Current and voltage test output points	Fixed test output level
Low point test output for current output	4 mA
High point test output for current output	20 mA
Low point test output for voltage output	1 V
High point test output for voltage output	10 V

7.3.3.1 Analog output adjustment example

CAUTION! Always switch off the transmitter power supply when connecting or disconnecting screw terminal wiring. Do not energize the transmitter power supply when wiring is not connected.

To test and adjust the voltage output level of the transmitter's analog output 1 with the Indigo80 handheld indicator:

1. Switch off the transmitter power supply and open the transmitter cover.
2. Connect the multimeter wiring to analog output 1 screw terminals and close the transmitter cover.
3. Power on the transmitter and connect the transmitter to the indicator.
4. Open the indicator main menu by pressing ☰.
5. Select **Devices**. If you have more than one device connected to the indicator, make a further selection between the devices.

   In this case, select **Indigo300**.
6. Select **Calibrate / Adjust**.
7. Scroll down and select **Analog output 1 adjustment**.
8. Enable the adjustment mode with the **Adjustment mode on/off** selection.
9. Start the low point output test by selecting **Output low point > OK**.

   The analog channel starts to send the low point test output (1 V in this example).
10. After the low point test output has stabilized, check the multimeter reading. Let the test stay in progress and press ⊂ to return to the previous menu level where you can enter the reading to Indigo80.

    Do not stop the test at this point.

11. After pressing ⊂, enter the reading of the multimeter to Indigo80:
    a. Select **Measured value, low point**.
    b. Use the arrow buttons to set the reading, and then select **Set**.
12. Start the high point output test by selecting **Output high point > OK**.

    The analog channel starts to send the high point test output (10 V in this example).
13. After the high point test output has stabilized, check the multimeter reading. Let the test stay in progress and press ⊂ to return to the previous menu level, where you can enter the reading to Indigo80.

    Do not stop the test at this point.

14. After pressing ⊂, enter the reading of the multimeter to Indigo80:
    a. Select **Measured value, low point**.
    b. Use the arrow buttons to set the reading, and then select **Set**.
15. To save the corrections to the output level, scroll down and select **Activate adjustment > OK**. Confirm by selecting **OK**.

    The corrections are shown under the **Analog output 1 adjustment** view, in **Low point offset** and **High point offset**.
16. To verify that the output level of the transmitter is now accurate, repeat the low point and high point output tests and check that the multimeter reading matches the test output.
17. To enter the adjustment date and information about the adjustment, scroll down the **Analog output 1 adjustment** view and set **Calibration date** and **Calibration text**.
18. Make sure that the adjustment mode is disabled with the **Adjustment mode on/off** selection.
19. Exit the menu by pressing ⊂ or return to the main menu by pressing ☰.
20. Switch off the power supply, remove the multimeter wiring and replace the analog output wiring.
21. After completing the wiring, close the transmitter cover and switch on the power supply.

More information

- Opening transmitter cover (page 20)
- Analog output terminals (page 28)
- Connecting Indigo300 to Indigo80 handheld indicator (page 43)

8. Maintenance and troubleshooting

8.1 Cleaning

You can clean the Indigo transmitter body by wiping it with a moist cloth. Standard cleaning agents can be used.

Refer to the probe-specific cleaning instructions when cleaning the probe connected to transmitter. Do not spray anything directly on the probe, since that may deposit impurities on the sensor.

Chemical tolerance

The following chemicals can be used to clean the transmitter:

- H_2O_2 (6000 ppm), non-condensing
- Alcohol-based cleaning agents such as ethanol and IPA (70 % Isopropyl Alcohol, 30 % water)
- $Ca(Clo)_2$ (calcium hypochlorite) max. 0.5 %
- QAC (quaternary ammonium cations) max. 0.5 %

Avoid exposing the transmitter to chemicals for unnecessarily long periods of time. Do not immerse it in a chemical, and wipe chemicals off the surfaces after cleaning.

8.2 Replacing probes

CAUTION! Only connect compatible measurement devices to the transmitter. Attempting to connect incompatible devices or cables can damage the equipment. Refer to transmitter specifications for compatibility information.

You can replace probes both when transmitter power is on and when it is off. There is no need to disconnect any wires from the transmitter; just detach the probe from the probe cable connector (5-pin M12).

When you replace a probe, measurement parameters and outputs will behave differently depending on whether the new probe's parameters are the same as the parameters of the old probe:

- If you replace a probe with a new one that has the same measurement parameters as the removed probe, the transmitter will continue to show those measurements once it detects the new probe.

- If you replace a probe with a new one that has different measurement parameters as the removed probe, you need to reconfigure the analog outputs for the new probe. The measurement parameters shown on the transmitter display will be changed automatically.

More information

- Connecting probes (page 32)
- Configuring analog outputs with Insight PC software (page 48)
- Configuring analog outputs with Indigo80 handheld indicator (page 51)

8.3 Restoring factory default settings with Insight PC software

You can restore the transmitter back to its factory default settings using the Insight PC software.

1. Connect the transmitter to the Insight software.
2. Select ⚙ **> Factory default settings > Restore settings**.

More information

- Connecting to Insight PC software (page 36)

8.4 Restoring factory default settings with Indigo80 handheld indicator

You can restore the transmitter back to its factory default settings using the Indigo80 handheld indicator.

1. Connect the transmitter to the indicator.
2. Open the indicator main menu by pressing ☰.
3. Select **Devices**. If you have more than one device connected to the indicator, make a further selection between the devices.

   In this case, select **Indigo300**.
4. Select **Settings**.
5. Select **Factory default settings > Restore settings > OK**.
6. Confirm by selecting **OK**.
7. Exit the menu by pressing ⮜ or return to the main menu by pressing ☰.

More information

- Connecting Indigo300 to Indigo80 handheld indicator (page 43)

8.5 Troubleshooting

Problem	Possible cause	Solution
Functionalities are not available in Insight PC software.	Insight PC software is in **Basic mode**. Certain functionalities are only available in **Advanced mode**.	Change the user mode from **Basic mode** to **Advanced mode** in the **Settings** menu of Insight PC software.
Measurement performance affected after calibration.	Probe has not been switched from calibration mode to normal operating mode in the Insight PC software.	Open the **Calibrate** menu in Insight PC software. Exit the menu with the **Close** selection, and ensure that you confirm closing the calibration mode when exiting with the **Yes** selection.
Analog output appears incorrect.	The analog output channel **Adjustment mode** has not been switched off after adjustment.	Open the analog output adjustment menu in Insight PC software or the Indigo80 handheld indicator and switch the adjustment mode off. Note that each of the 3 analog outputs has its own configuration menu.
Transmitter display shows a warning saying that outputs are configured for a different probe.	An analog output configuration for another type of probe already exists in the transmitter, so the settings cannot be received automatically from the type of probe you are connecting.	Configure the analog output settings for the new probe, or clear the analog output configuration of the transmitter to enable automatic receiving of the settings. You can do these tasks using either the Insight PC software or the Indigo80 handheld indicator.
Transmitter display shows a warning saying that the calibration has expired.	This warning is displayed by the calibration reminder functionality if the connected probe's calibration interval has been exceeded.	Calibrate the probe and update the calibration date information.
The push button for navigating the transmitter display does not function.	The push button has been disabled, so you can currently change the transmitter display view only with Insight PC software or Indigo80 handheld indicator.	Enable the push button using Insight PC software or the Indigo80 handheld indicator.

8.6 Display messages

The following table lists the display messages that the transmitter uses to inform you about its state.

In addition to the transmitter's messages, the connected probes have probe-specific messages that are also shown on the transmitter display. Messages from the connected probe start with **Probe:**. For more information on the probe-specific messages, see your probe's user documentation at docs.vaisala.com.

The non-display version of the transmitter uses an LED status indicator to inform you that a display message is active. To view the message, connect the transmitter to the Insight PC software or Indigo80 handheld indicator.

Table 9 Indigo transmitter messages shown on display

Display message	Description	Recommended action
Errors		
Supply voltage out of range.	The supply voltage is below the minimum (range: 15–30 V DC or 24 V AC ±10 % 50/60 Hz).	The error clears when the supply voltage returns to the specified range. Check your power supply and restart the transmitter if needed.
Analog output out of range.	The analog output (1–3) identified in the message has gone out of range.	The error clears when the output returns to range. Check the analog output configuration.
Warnings		
Outputs configured for different probe.	An analog output configuration for another type of probe already exists in the transmitter, so the settings cannot be received automatically from the type of probe you are connecting.	Configure the analog output settings for the new probe, or clear the analog output configuration of the transmitter to enable automatic receiving of the settings.
No probe connected.	The measurement probe is not connected, or the probe is connected poorly and cannot be recognized by the transmitter.	Check that you have fastened the probe correctly with the locking wheel.
Unable to measure all parameters.	Some of the measurements you have configured to be displayed are currently not available. This can be caused, for example, by the probe heating feature: parameters that are affected by heating cannot be shown while the heating cycle is ongoing.	-

Display message	Description	Recommended action
Analog output test active.	Test output is being sent from the analog output (1–3) identified in the message.	-
Analog output calibration in progress.	The analog output (1–3) identified in the message is being calibrated.	-
Notifications		
Probe connected:	The transmitter displays the name of the connected probe.	-
Waiting for measurements.	The connected probe is preparing measurements (for example, at start-up or after a probe restart).	-
Date and time not set.	The transmitter has lost its date and time settings. This can occur, for example, if the transmitter is powered off for a long time.	Connect the transmitter to the Insight PC software or the Indigo80 handheld indicator for automatic date and time setup.

More information

‣ LED status indicator (page 16)

8.7 Writing a problem report

When troubleshooting the product, write a problem report including:

- What failed (what worked / did not work)?
- Where did it fail (location and environment)?
- When did it fail (date, immediately / after a while / periodically / randomly)?
- How many failed (only one defect / other same or similar defects / several failures in one unit)?
- What was done when the failure was noticed?
- What was connected to the product and to which connectors?
- Input power source type, voltage, and list of other items (such as lighting, heaters, and motors) that were connected to the same power output.
- Are all parts connected and grounded properly? Take a photo to help the troubleshooting.

This information is helpful if you need to contact Vaisala support.

9. Technical data

9.1 Specifications

Table 10 Indigo-compatible probes

Measurement type	Probe models
Humidity and temperature	HMP1, HMP3, HMP4, HMP5, HMP7, HMP8, HMP9
Temperature	TMP1
Dew point	DMP1, DMP5, DMP6, DMP7, DMP8
Carbon dioxide	GMP251, GMP252
Vaporized hydrogen peroxide	HPP271, HPP272
Moisture in oil	MMP8

Table 11 Indigo300 operating environment

Property	Description/Value
Operating temperature	With display: −20 ... +60 °C (−4 ...+140 °F) Without display: −40 ... +60 °C (−40 ...+140 °F)
Storage temperature	With display: −30 ... +70 °C (−22 ...+158 °F) Without display: −40 ... +70 °C (−40 ...+158 °F)
Operating humidity	0–100 %RH
Maximum operating altitude	5000 m (approx. 16 400 ft)
IP rating	IP66

Table 12 Indigo300 inputs and outputs

Property	Description/Value
Power supply input	15–30 V DC [1)] 24 V AC ±10 % 50/60 Hz
Fuse size for power supply	2.5 A
Transmitter service port connection	• Connection to Insight with USB2 and cable 262195SP [2)] • Connection to Indigo80 with cable 262195SP
Analog outputs	Current or voltage

Property	Description/Value
Number of analog outputs	3
Isolation	Not galvanically isolated
Selectable voltage output types	0–1 V, 0–5 V, 0–10 V, 1– 5 V, scalable, $R_L \geq 10$ kΩ
Selectable current output types	4–20 mA, 0–20 mA, scalable, $R_L \leq 500$ Ω
Accuracy of analog outputs at 20 °C (+68 °F)	±0.1 % full scale [3]
Temperature dependence	±0.005 % / °C full scale
Current consumption at 20 °C (+68 °F) (U_{in} 24 V DC)	
Minimum consumption with display off, no analog outputs active, no probe connected [4]	13 mA
Minimum consumption with display on, brightness normal mode, no analog outputs active, no probe connected	18 mA
U_{out} 0–1 V, 0–5 V, 0–10 V, 1–5 V	+ 1.8 mA per connected channel at maximum load
I_{out} 4–20 mA, 0–20 mA	+ 12.3 mA max. per connected channel

1) *When used with the HMP7 probe, the minimum required power supply input is 18 V DC.*
2) *Vaisala Insight software for Windows® available at vaisala.com/insight.*
3) *For the voltage outputs, small variation is possible around true zero.*
4) *For the current consumption of the connected probe, see the probe's user documentation at docs.vaisala.com.*

Table 13 Indigo300 compliance

Property	Description/Value
EU directives and regulations	EMC Directive (2014/30/EU) RoHS Directive (2011/65/EU) as amended by 2015/863
Electromagnetic compatibility (EMC)	EN IEC 61326-1, industrial environment
EMC emissions	CISPR 32 / EN 55032, Class A FCC part 15 B, Class A ICES-3 / NMB-3 (Class A)
Compliance marks	CE, China RoHS, FCC, KC, RCM, UKCA

Table 14 Indigo300 mechanical specifications

Property	Description/Value
Housing material	EN AW-6082
Connection screw terminals	Max. 1.5 mm^2 wire (16 AWG)
Cable lead-throughs for output and power cables	• M20×1.5 cable gland / conduit fitting NPT 1/2″ • M16×1.5 cable gland / conduit fitting NPT 1/2″
Cable diameter for M20×1.5 gland	7–13 mm (0.26–0.51 in)
Cable diameter for M16×1.5 gland	2–6 mm (0.08–0.24 in)
Dimensions	161 × 134 × 43.5 mm (6.34 × 5.26 × 1.71 in)
Weight	1200 g (2.65 lb)

9.2 Dimensions

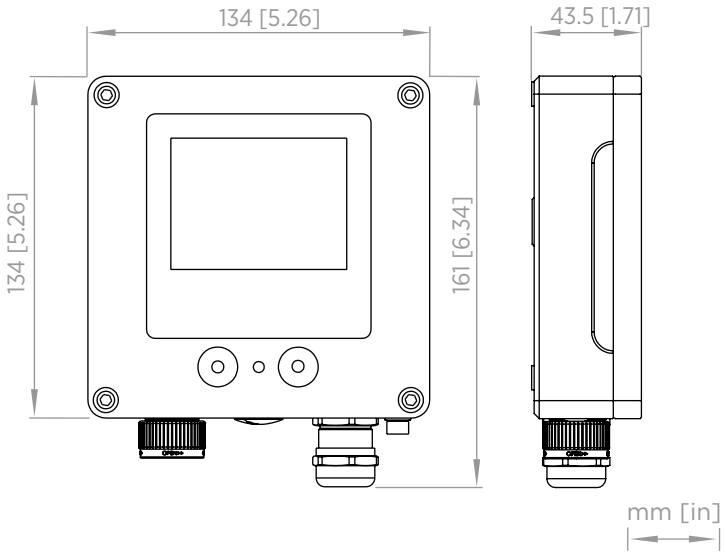

Figure 33 Indigo300 transmitter dimensions

9.3 Spare parts and accessories

Information on spare parts, accessories, and calibration products is available online at vaisala.com and store.vaisala.com.

Table 15 Probe connection cables

Description	Order code
Detachable cables for use with locking wheel	
Probe connection cable, 1 m (3 ft 3 in)	INDIGOCABLE1M
Probe connection cable, H_2O_2 compatible, 1 m (3 ft 3 in)	INDIGOCABLEHD1M5
Probe connection cable, 3 m (9 ft 11 in)	INDIGOCABLE3M
Probe connection cable, H_2O_2 compatible, 3 m (9 ft 11 in)	INDIGOCABLEHD3M
Probe connection cable, 5 m (16 ft 5 in)	INDIGOCABLE5M
Probe connection cable, H_2O_2 compatible, 5 m (16 ft 5 in)	INDIGOCABLEHD5M
Probe connection cable, 10 m (32 ft 10 in)	INDIGOCABLE10M
Probe connection cable, H_2O_2 compatible, 10 m (32 ft 10 in)	INDIGOCABLEHD10M
Fixed cables for use with cable gland	
Probe connection cable, 0.3 m (12 in), open end [1]	CBL210896-03MSP
Probe connection cable, 1 m (3 ft 3 in), open end	CBL210896-1MSP
Probe connection cable, 3 m (9 ft 11 in), open end	CBL210896-3MSP
Probe connection cable, 5 m (16 ft 5 in), open end	CBL210896-5MSP
Probe connection cable, 10 m (32 ft 10 in), open end	CBL210896-10MSP

1) *The usable length outside of the transmitter enclosure is approx. 0.1 m (4 in) shorter than the total length of the cable.*

Table 16 Indigo300 spare parts and accessories

Description	Order code
Adapter plate for replacing a Vaisala 330 series transmitter	DRW257715SP
DIN rail installation kit for 35 mm (0.11 in) wide DIN rail	ASM215071SP
Vaisala Indigo USB adapter and M12 - M8 service cable, for connecting to Insight	USB2 and 262195SP
M12 - M8 service cable 1.5 m (4.9 ft), for connecting to Indigo80	262195SP
Cable gland M20×1.5 for 7.0–13.0 mm (0.26–0.51 in) cable	253993SP
Conduit fitting M20×1.5 for NPT1/2″ conduit	214780SP
Cable gland M16×1.5 for 2.0–6.0 mm (0.08–0.24 in) cable	ASM213671SP
Conduit fitting M16×1.5 for NPT1/2″ conduit	210675SP
Plug for M20 lead-through	ASM213672SP
Plug for M16 lead-through	210369SP
Service port plug	DRW257660SP

Appendix A. Recycling instructions

These recycling instructions guide you on the end-of-life treatment of this Vaisala product. As waste regulations and infrastructure vary in each country, these instructions only indicate the different components to be separated and common ways to handle them. Always follow local requirements when disposing of the product. Vaisala encourages to use the best available recycling practices to minimize related environmental impacts.

Vaisala is committed to meeting the requirements of the EU Waste Electrical and Electronic Equipment (WEEE) Directive. This directive aims to minimize the impact of electrical and electronic goods on the environment, by increasing reuse and recycling, and reducing the amount of WEEE going to landfill. This symbol indicates that the product should be collected separately from other waste streams and treated appropriately.

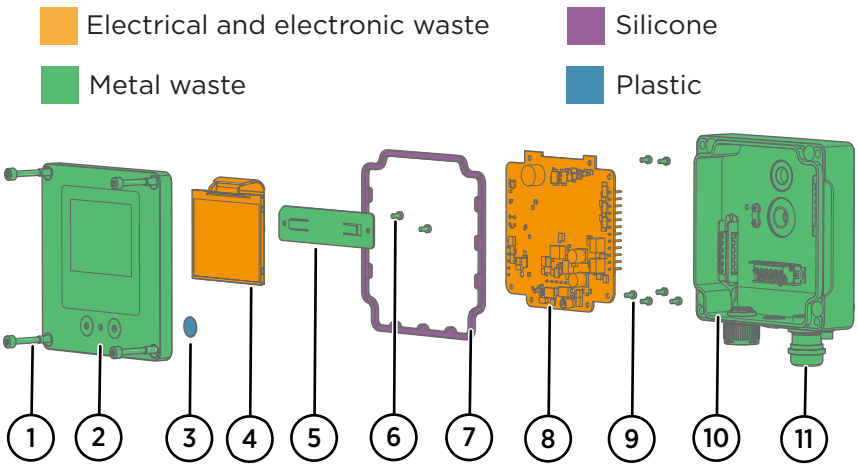

Figure 34 Materials for recycling

Table 17 Materials for recycling

Part		Material	Recycling
1	Cover screws	Stainless steel	Metal waste
2	Top cover	Aluminum alloy	Metal waste

Part		Material	Recycling
3	Push button gasket	Thermoplastic elastomer (TPE)	Dispose of or recycle as plastic according to local regulations
4	Display	Various materials	Electrical and electronic waste
5	Display holder	Stainless steel	Metal waste
6	Display holder screws	Stainless steel	Metal waste
7	Cover gasket	Silicone	Dispose of or recycle as silicone according to local regulations
8	PCB	Various materials	Electrical and electronic waste
9	PCB screws	Stainless steel	Metal waste
10	Transmitter base	Aluminum alloy, various materials	Metal waste
11	Cable gland	Nickel-plated brass	Metal waste

Maintenance and calibration services

Vaisala offers comprehensive customer care throughout the life cycle of our measurement instruments and systems. Our factory services are provided worldwide with fast deliveries. For more information, see vaisala.com/calibration.

- Vaisala Online Store at store.vaisala.com is available for most countries. You can browse the offering by product model and order the right accessories, spare parts, or maintenance and calibration services.
- To contact your local maintenance and calibration expert, see vaisala.com/contactus.

Warranty

For standard warranty terms and conditions, see vaisala.com/warranty.
Please observe that any such warranty may not be valid in case of damage due to normal wear and tear, exceptional operating conditions, negligent handling or installation, or unauthorized modifications. Please see the applicable supply contract or Conditions of Sale for details of the warranty for each product.

Technical support

Contact Vaisala technical support at helpdesk@vaisala.com. Provide at least the following supporting information as applicable:

- Product name, model, and serial number
- Software/Firmware version
- Name and location of the installation site
- Name and contact information of a technical person who can provide further information on the problem

For more information, see vaisala.com/support.

Recycling

Recycle all applicable material according to local regulations.

VAISALA

www.vaisala.com

AKRIBIS · www.akribis.info · contacto@akribis.info