USER GUIDE

HydroCam-Series

Geolux

Distributed by AKRIBIS

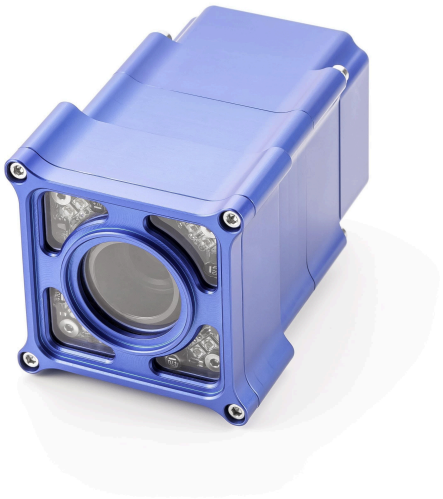

HydroCam Camera

Camera for Remote Visual Site Inspection

User Manual

v2.0.7

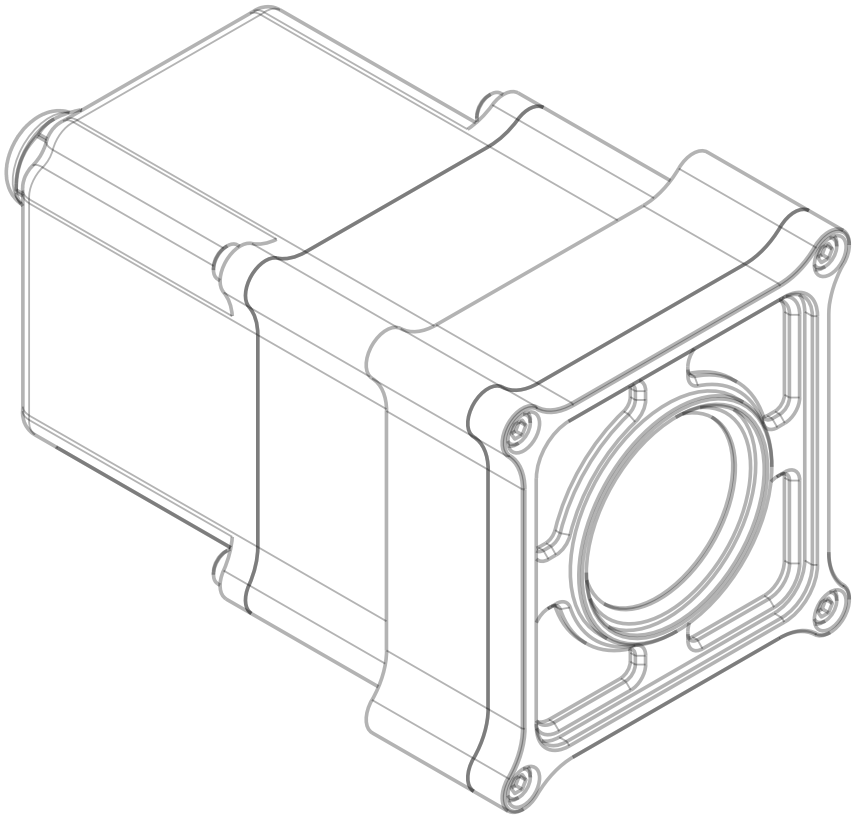

Copyright ©2023 Geolux d.o.o. All rights reserved.

Starting Point

Thank you for purchasing the Geolux HydroCam camera for remote visual site inspection! We have put together the experience of our engineers, the domain knowledge of our customers, the enthusiasm of our team, and the manufacturing excellence to deliver this product to you.

You may freely rely on our field-proven technology. The use of top-quality components and advanced signal processing algorithms ensures that Geolux HydroCam camera can be used in various applications and environments.

We have created this User Manual to assist you in setting up and using the Geolux instrument.

Should there be any questions left unanswered, please feel free to contact us directly:

Geolux d.o.o.
Ljudevita Gaja 62
10430 Samobor
Croatia

E-mail: **geolux@geolux.hr**
Web: **www.geolux.hr**

Contents

1. Introduction **1**

2. Electrical Characteristics **2**

3. Connector Pin-Out **3**

3.1. Serial RS-232 Interface 4

3.2. Serial RS-485 Interface 4

4. Camera Settings **5**

5. Data Interface **9**

5.1. Serial RS-232 Interface 9

5.2. Serial RS-485 Interface 9

6. Data Protocols **10**

6.1. Servicing Protocol (RS-232) 10

6.2. Modbus Protocol (RS-485) 16

7. Communication Flow Diagram **27**

8. Camera Configurator Utility **28**

9. Troubleshooting **31**

10. Appendix A - Mechanical Assembly **34**

1 Introduction

The Geolux HydroCam camera is a 5-megapixel camera specifically designed for environmental monitoring and for working with a variety of data loggers via a simple RS-232 communication protocol or Modbus RTU protocol. The camera has a controllable zoom and focus lens, and automatic day/night mode operation, with IR illuminators used in night mode. The camera compresses the images using JPEG algorithm with a configurable quality parameter.

2 Electrical Characteristics

The electrical characteristics of the Geolux HydroCam camera are given in Table 1.

Table 1. Electrical Characteristics

Parameter	MIN	TYP	MAX	Unit
Communication interface RS-232 interface speed RS-485 interface speed	 1200	 115200 	 57600	 bps bps
Power supply voltage	9.0	12.0	27.0	V
Image resolution	160x120		2592x1944	
Focal length	6		22	mm
Field of view	16.3		46.4	deg.
Minimum illumination		0.1		lux
IR-cut filter		650		nm
Current consumption		75	150	mA
Operational temperature range	-20		+85	°C
Mechanical		110x90x50		mm
Weight		600		g

3 Connector Pin-Out

The camera uses robust IP68 circular M12 connector with 12 positions and the mating cable is also delivered with the camera. The connector and cable details are shown in Picture 1 while Table 2 gives a detailed description of each pin.

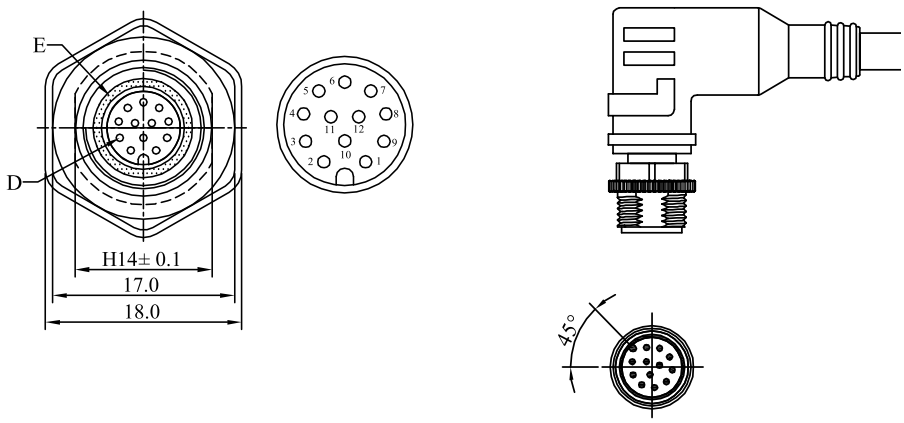

Picture 1. HydroCam Camera Connectors

Table 2. Cable Pin-Out

Pin No.	Wire Color		Pin Name	Pin Description
1	White		GND	This pin should be connected to the ground (negative) pole of the power supply.
2	Brown		+Vin	The power supply for the HydroCam camera is provided on this pin. The HydroCam camera power supply voltage must be in the range of 9 VDC to 27 VDC, and the power supply must be able to provide at last 0.65W
3	Green		RS232 – TxD	RS-232 data transmit signal.
4	Yellow		RS232 – RxD	RS-232 data receive signal.
5	Grey		GND	Signal ground.
6	Pink		CAN – H	CAN2.0B high signal. (optional)
7	Blue		CAN – L	CAN2.0B low signal. (optional)
8	Red		SDI12 DATA	SDI12 data line
9	Orange		RS485 – D-	RS-485 data transmitter/receiver low signal.
10	Dark Red		RS485 – D+	RS-485 data transmitter/receiver high signal.
11	Black		Service RS232 - TxD	Do not connect
12	Purple		Service RS232 - RxD	Do not connect

3.1. Serial RS-232 Interface

Serial RS-232 interface is implemented as standard PC full-duplex serial interface with voltage levels adequate for direct connection to PC computer or other embedded devices used for serial RS-232 communication.

In case the RS-232 interface is connected to standard DB-9 PC connector, TxD line (green wire) is connected to pin 2 and RxD (yellow wire) is connected to pin 3. For proper operation of the serial interface, additional connection of signal GND (grey wire) is required on pin 5 of the DB-9 connector.

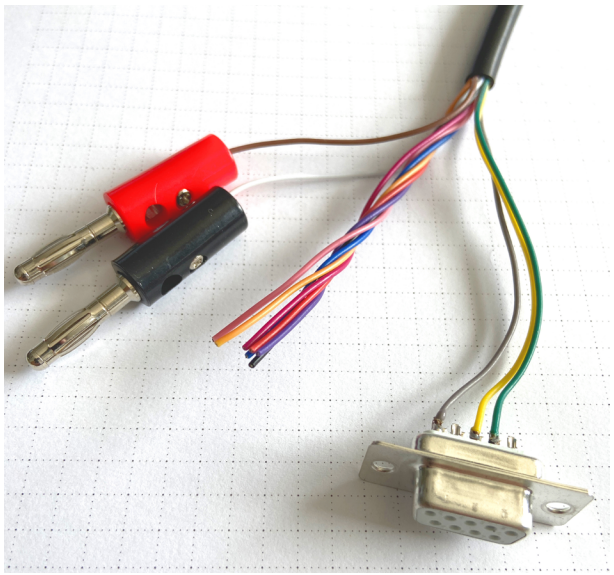

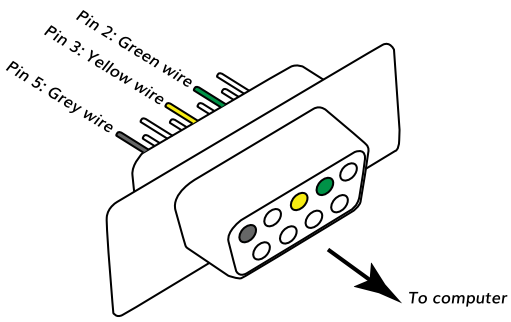

Picture 2. Serial RS232 DB-9 Cable

Geolux recommends using Waveshare USB TO RS232/485/TTL converter for connecting Geolux instruments to computers without a native RS-232 port.

https://www.waveshare.com/catalog/product/view/id/3629/s/usb-to-rs232-485-ttl/category/37/

Optionally Geolux can supply a cable with DB-9 connector connected to the cable but this must be specified as option when ordering the sensors.

Several communication protocols are available, and custom on request. Details of communication protocols are described later in this user manual.

3.2. Serial RS-485 Interface

Serial RS-485 interface is implemented as standard industrial half-duplex communication interface. The communication interface is internally short-circuit and overvoltage protected. Depending on the receiving device, the interface can be used with only two wires (D+ dark red wire & D- orange wire) while in some cases the ground connection (signal GND grey wire) is also required. For more details please consult receiver specification.

The most common communication protocol used with RS-485 interface is Modbus-RTU, but other protocols are also available on request. Detailed description of communication protocols is given in chapter 6 of this user manual.

4 Camera Settings

To change the camera settings, connect the HydroCam camera to the PC computer, and start the Geolux Instrument Configurator PC application. Through the user interface of the application, the following parameters can be configured.

Modbus Settings

When a Modbus setting is changed, the new communication parameters will not be used until the HydroCam is restarted using either the software reset command or the power recycle procedure. It is done so that several parameters can be changed in a sequence without restarting the device.

Modbus baud rate

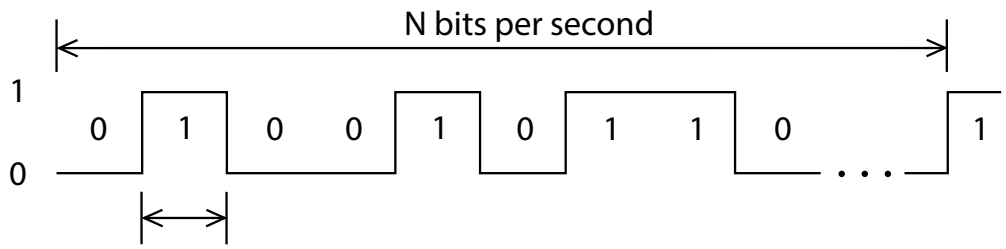

Configures the baud rate (bits per second) for serial communication on RS-485 data line. This setting controls how many bits are sent on the communication line in one second. The available values are standardized. Using higher baud rates over longer lines may introduce errors in transferred data. Valid communication baud rates are 1200, 2400, 4800, 9600, 14400, 19200, 38400 and 57600 bps, while the default instrument RS-485 baud rate is 9600 bps.

Modbus ID

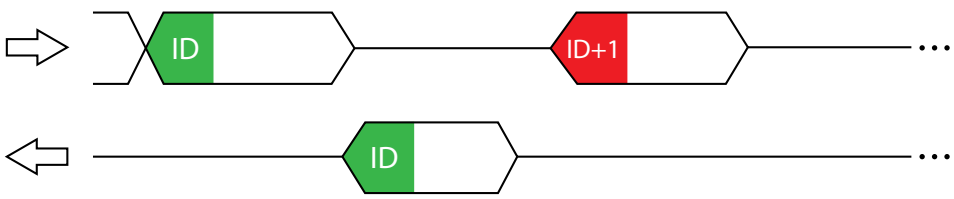

Configures the device (slave) ID to be used for Modbus RTU protocol. Modbus RTU uses request/response format and allows multiple instruments to be connected on the same bus. When a remote master transmits the request message, it will use the device ID as a device address. All instruments will receive the request, but only the instrument with matching device ID will answer to the received request.

Modbus parity

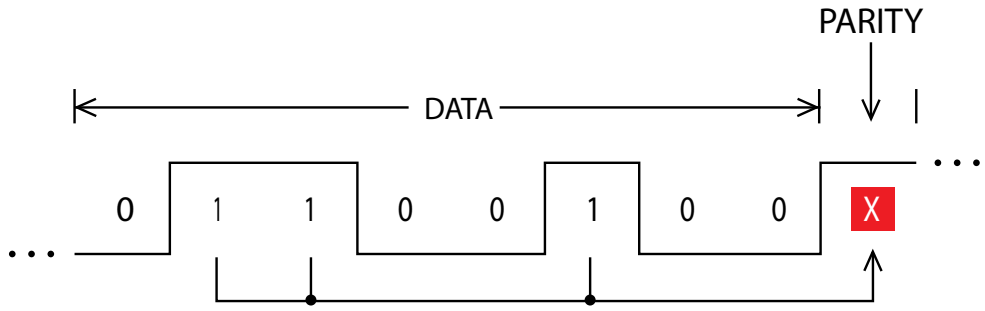

Parity is used in serial communication for basic error detection. When parity is set to *None*, no parity is used, and no error detection is possible on bit level. When parity is set to *Odd parity*, an additional bit is added to the communication that will be set to 1 when there is odd number of bits with value 1 in the 8-bit payload byte. Similarly, when parity is set to *Even parity* an additional bit is added to the communication that will be set to 1 when there is even number of bits with value 1 in the 8-bit payload byte. Generally, all bytes on the receiver side where the parity bit is not matching the message will be discarded. The default setting no parity.

Modbus Stop Bits

Stop bits are added to the end of each data byte transferred over serial communication, to allow pause between two bytes. One or two bits may be used. The default setting is one stop bit.

Camera Parameters

Resolution

Configures the camera image resolution. The resolution can be set to one of the following values: 160x120, 320x240, 640x480, 800x600, 1024x768, 1280x960, 1600x1200, 1920x1080, 2048x1536, 2592x1944. Please note that when the HydroCam camera is connected via RS-485 interface, the resolution values are stored in two different registers. When one value is changed, the value in the other register is automatically changed to its corresponding value.

Quality

JPEG image relative quality in percentage from 1 to 100, where 100 is best quality and least compression, resulting in largest image for the given resolution. Default value 75 will be shown and used if an invalid value is found in the Flash on device startup.

JPEG maximum size

The JPEG maximum file size is a decimal number in kB which specifies the maximum JPEG file size generated after a snapshot is taken. The camera will try to reduce the quality in several steps to get the file size below the specified limit, and it will generate the minimum file possible if the goal could not be reached. The value 0 means no limit in size is required (no quality reduction is done over the one set in the Flash already). Other values represent maximum JPEG file size requirement in kilobytes, but please note that it may not be possible for HydroCam to satisfy this requirement, and in this case, it will start decreasing image quality internally, starting from the maximum possible quality, but without changing the quality parameter stored in the Flash memory. As soon as the resulting JPEG file is at or below the required file size, the search will terminate and the file will be generated with the quality reached. If no requirement was met, the resulting file size will be whatever was accomplished in the last step.

Night mode

Changes the camera mode according to the given parameter which can be either *off*, *on* or *auto*. In *off* mode, the IR filter in the camera is always active. In *on* mode, the IR filter is disabled and the camera gives a black and white image. In *auto* mode, the camera measures the current level of environmental illumination and automatically selects the optimal mode for the IR filter.

IR LED mode

Changes the camera's IR LED mode according to the given parameter which can be either *off*, *on* or *auto*. In *off* mode, the IR LEDs are always off. In *on* mode, the IR LEDs are on during the night, and off during the day. In *auto* mode, the IR LEDs are active only during image acquisition, autofocus or manual zoom or focus operations.

Autofocus point

Configures the point used for the autofocus operation. The x and y coordinates are specified as a percentage of the image size with (0,0) being at the bottom left. The values are in the 0 to 100 range. Change of autofocus coordinates is not applied until a new autofocus request is made (the Geolux Instrument Configurator application handles this step internally). Please note that autofocus is also performed in the background of the zoom operation, but this autofocus does not use these autofocus point coordinates, as focus in that case is always in the middle of the image, i.e. the autofocus point is (50,50). Using the Geolux Instrument Configurator which is described in chapter 8 of this user manual, the autofocus point can be set either by manually inputing the values or by selecting a point on the image which is shown on the right side of the window when the *Autofocus point* setting is selected. If a snapshot has been taken and the image has been acquired, the last image will be shown. If no snapshot has been taken (or the camera is connected via RS-485 interface and the image can't be acquired after taking a snapshot), a blank canvas will be shown instead of the image.

AKRIBIS · www.akribis.info · contacto@akribis.info

Autoexposure region

Configures the area used to measure brightness for the autoexposure operation. The x and y coordinates of the center of the area, as well as the width and height of the area are all specified as a percentage of the image size with (0,0) being at the bottom left. The values are in the 0 to 100 range. Please note that if there was a conflict in the values specified, while individual values were still within valid range, the HydroCam will accept and store values specified, but will prioritize the size of the region when calculating image brightness and determine exposure. For example, if the coordinates of the center of the region were x=20 and y=30, while the size of the area was determined by width=200 and height=100, the camera would conclude it was not possible to comply with both requirements and would consider the center to be at x=100 and y=50 when calculating the brightness. Using the Geolux Instrument Configurator which is described in chapter 8 of this user manual, the autoexposure region can be set either by manually inputing the values or by selecting a rectangle on the image which is shown on the right side of the window when the *Autoexposure region* setting is selected. If a snapshot has been taken and the image has been acquired, the last image will be shown. If no snapshot has been taken (or the camera is connected via RS-485 interface and the image can't be acquired after taking a snapshot), a blank canvas will be shown instead of the image.

White balance offset

Configures the white balance offset parameters for the red, green, and blue color components. The values are numbers in the range of 8 to 48. Each parameter is used for its color respectively, internally divided by 10, and used as a multiplier for the default sensor analog gain for that particular color.

Color correction mode

Sets the color correction mode, valid values are integers between 0 and 3. The resulting effect of value 0 is that white balance correction is turned off, and #get_info command will report the color correction as off. Values 1 to 3 result in the white balance algorithm running with different set of parameters defined for each mode. Please contact the Geolux support for more information about different color correction modes.

Auto snapshot interval

Sets the time interval in minutes for autonomous periodic snapshot operation. A valid argument is the number of minutes between 0 and 65535, with 0 meaning there is no autonomous snapshot operation. If the interval is set to some valid non-zero value, the user should take care that a new snapshot is not requested before the previous one was transferred. This command does not make much sense if only UART is used transfer images as the transfer would not happen automatically, but if FTP upload is enabled, the image will also be transferred to the FTP server automatically. Please note that the camera needs to be powered on in order to take periodic snapshots, as there is no battery-operated clock, and the time interval is measured from the power up.

Network Settings

IP address

Sets the HydroCam IP address to be used if DHCP is disabled, or not running. The valid range for each octet is from 0 to 255, but it is the user's responsibility to configure the network properly.

Subnet mask

Sets the HydroCam IP subnet mask to be used if DHCP is disabled, or not running. The valid range for each octet is from 0 to 255, but it is the user's responsibility to configure the network properly.

Default gateway

Sets the HydroCam IP subnet mask to be used if DHCP is disabled, or not running. The valid range for each octet is from 0 to 255, but it is the user's responsibility to configure the network properly.

DHCP

Enables or disables the HydroCam DHCP service. If DHCP is enabled, and if the network parameters are resolved, static network parameter values defined by the user will not be used, and values obtained through the DHCP will be used instead. Those values are the IP address, the IP subnet mask, and the default gateway IP address.

FTP

Enables or disables the HydroCam FTP client. If FTP is enabled, and if the ethernet network is up and running, every snapshot taken will be uploaded to the FTP server defined by the user. The file name for upload is created from the HydroCam camera's serial number and image counter. If the ethernet or FTP server is not operational while the snapshot is being taken, the image counter will still be incremented if FTP is enabled, so there would be gaps in image counters when ethernet operation is restored and new images are uploaded. The image counter does not increment if FTP is disabled. The FTP client works in passive mode.

Server name

Defines the FTP server name or the IP address. A valid server name is any combination of up to 80 characters. The IP address could be used instead, if known and preferred by the user. The IP address entry could be convenient for testing purposes, in local networks without DNS, or when having direct connection to the laptop running the FTP server service. The HydroCam camera does not check the validity of the server's name in any way, so it is the user's responsibility to configure the server name or the IP address correctly, including any firewall setting, public IP address setting, or port forwarding needed on the server side.

Username

Defines the FTP username. A valid username is any combination of up to 30 characters. The HydroCam camera does not check the validity of the username in any way, so it is the user's responsibility to configure the name acceptable to the FTP server. Please note that the FTP protocol does not provide any security, and the data, including the username and password, is transferred in plain text over unsecured connection.

Password

Defines the FTP password. A valid password is any combination of up to 30 characters. The HydroCam camera does not check the validity of the password in any way, so it is the user's responsibility to configure the password acceptable to the FTP server. Please note that the FTP protocol does not provide any security, and the data, including the username and password, is transferred in plain text over unsecured connection.

FTP path

Path to the folder on the FTP server where the images will be uploaded.

5 Data Interface

Geolux HydroCam camera offers multiple data interfaces, in order to make the integration of the device with existing SCADA/telemetry systems easy.

5.1. Serial RS-232 Interface

Serial RS-232 interface is used for direct connection of a single camera unit with the computer. The serial interface is used both for retrieving images and for configuration of the camera. Geolux provides a PC application for instrument configuration and image acquisition free of charge. A detailed description of the protocol used is given in chapter 6 of this user manual.

Default communication parameters are:

Bitrate:	115200 bps
Data bits:	8
Stop bits:	1
Parity:	None

5.2. Serial RS-485 Interface

Serial RS-485 interface is used for connecting multiple instruments to a single data logger. RS-485 interface uses a different protocol then the protocol used over RS-232 interface, in order to allow multiple instruments connected on a single RS-485 bus. The HydroCam camera supports Modbus protocol over RS-485 bus. A detailed description of the protocol is given in chapter 6 of this user manual.

Default communication parameters are:

Bitrate:	9600 bps
Data bits:	8
Stop bits:	1
Parity:	None
Device ID:	100

6 Data Protocols

Geolux HydroCam camera supports the following data protocols:

- Servicing protocol on RS-232 interface for configuring the unit
- Request-response protocol (Modbus) on RS-485 interface that allows multiple units to be used on a single RS-485 bus

6.1. Servicing Protocol (RS-232)

The camera uses a standard RS-232 connection to communicate with the data logger unit or any other device. The default RS-232 port parameters are 115200 baud rate, 8 data bits, 1 stop bit and no parity.

Immediately after the camera is powered up, it will report the current firmware version and build time stamp over the serial port. After that, the camera will not send any data over the serial port automatically. It will wait until a valid command is sent to the camera, and then the camera will return the response to the received command.

To make instrument configuration easy, Geolux provides the Geolux Instrument Configurator utility application. Regular users do not need to be concerned about the servicing protocol used between the Geolux Instrument Configurator and the HydroCam camera. Geolux Instrument Configurator is described in chapter 8 of this user manual.

The following requests are recognized by the servicing protocol and every command should be followed by <CR>, <LF> or <CR><LF> (enter).

Take snapshot - This command requests that the camera starts taking the next snapshot. Immediately after the command is received, the camera will return the response with the current status, which can be *OK*, *ERR* or *BUSY*. If the response is *OK*, this means that the camera is now in the process of taking the snapshot and compressing it to JPEG. If the response is *BUSY*, this means that a previous #take_snapshot, #move_zoom, #move_focus or #run_autofocus command has not yet been completed, or the camera is waiting for an auto exposure process to determine the best possible exposure for current environment conditions. After sending the #take_snapshot and receiving either *BUSY* or *OK* response, the #get_status command should be periodically sent to check when the snapshot is ready for download (see next paragraph). The *ERR* response indicates a general error, and the #take_snapshot command should be sent again to retry the operation.

#take_snapshot

Get status - This command checks the current snapshot status. The reported status can be any of the following: *NONE*, *BUSY* or *READY*. The returned status will be *NONE* if no previous #take_snapshot command was issued, and in that case the reported size will be zero. The returned status will be *BUSY* (and the reported size will be zero) after the #take_snapshot command is issued, but before the compressed JPEG image is ready for retrieval. The status will be *READY* after the snapshot is completed, and the compressed JPEG image can be retrieved by sending the #get_image command. When the status is *READY*, the size will be set to the JPEG image size in bytes.

#get_status

Get image - This command requests the camera to send an image data chunk in JPEG format. This can only be done after the #get_status command returns the status READY. Three parameters must be supplied: *offset* (the starting offset of the chunk in JPEG image data), *length* (the requested length in bytes of the data chunk), and *format* (which should be set to RAW for transmitting the data chunk). If the *offset* and *length* parameters specify a chunk extending beyond the end of the image data, the camera will return the requested number of bytes, but any bytes beyond the end of the image data will be sent as zeros. Every camera response to the #get_image command contains 2+*length* bytes, where the first two bytes are a CRC-16/ARC checksum calculated over the image chunk and recorded in network order. The CRC calculation includes any padding zeros sent beyond the actual image data. For example, if the CRC is 0x1234, the response will look like 0x12 0x34 <chunk>. The CRC is stored in the memory as (0x12 << 8) | 0x34, meaning the first received byte is the higher byte and the second is the lower byte.

#get_image=<offset>,<length>,<format>

Reset camera - This command requests the camera to perform a software reset.

#reset

Autofocus - This command starts the process of moving the lens focus and searching for sharpest image around the center point defined and stored with the #set_autofocus_point command. The returned status can be *OK* or *BUSY*, if the previous autofocus command is not yet completed, zoom command is still active or there is another process that could be disrupted by moving the lens focus.

#run_autofocus

Change Modbus settings:

Modbus baud rate -Configures the baud rate (bits per second) for serial communication on RS-485 data line. This setting controls how many bits are sent on the communication line in one second. The available communication baud rates are 1200, 2400, 4800, 9600, 14400, 19200, 38400 and 57600. Using higher baud rates over longer lines may introduce errors in transferred data. The default instrument RS-485 baud rate is 9600 bps. The returned status can be *OK* or *ERR*, if the given parameter is invalid.

#set_modbus_baudrate=1200
#set_modbus_baudrate=2400
#set_modbus_baudrate=4800
#set_modbus_baudrate=9600
#set_modbus_baudrate=14400
#set_modbus_baudrate=19200
#set_modbus_baudrate=38400

Modbus ID - Configures the device (slave) ID to be used for Modbus RTU protocol. Modbus RTU uses request/response format and allows multiple instruments to be connected on the same bus. When a remote master transmits the request message, it will use the device ID as a device address. All instruments will receive the request, but only the instrument with a matching device ID will answer to the received request.

#set_modbus_address=<1-247>

Modbus parity - Parity is used in serial communication for basic error detection. When parity is set to **N**, no parity is used, and no error detection is possible on bit level. When parity is set to odd parity, an additional bit is added to the communication that will be set to 1 when there is an odd number of bits with value 1 in the 8-bit payload byte. Similarly, when parity is set to even parity, an additional bit is added to the communication that will be set to 1 when there is an even number of bits with value 1 in the 8-bit payload byte. Generally, all bytes on the receiver side where the parity bit is not matching the message will be discarded. The default setting is no parity.

#set_modbus_parity=N	(no parity)
#set_modbus_parity=O	(odd parity)
#set_modbus_parity=E	(even parity)

Modbus stop bits - Stop bits are added to the end of each data byte transferred over serial communication, to allow pause between two bytes. One or two bits may be used. The default setting is one stop bit.

#set_modbus_stopbist=1	(1 stop bit)
#set_modbus_stopbits=2	(2 stop bits)

Change camera parameters:

Resolution - This command changes the image resolution.

#set_resolution=160x120
#set_resolution=320x240
#set_resolution=640x480
#set_resolution=800x600
#set_resolution=1024x768
#set_resolution=1280x960
#set_resolution=1600x1200
#set_resolution=1920x1080
#set_resolution=2048x1536
#set_resolution=2592x1944

Quality - This command changes the JPEG quality parameter, which can be in the range between 1 and 100. 100 corresponds to the best image quality with the biggest file size, and lower numbers will give stronger compression. The recommended setting is in the range of 70-80.

#set_quality=<1-100>

JPEG maximum size - This command changes the JPEG maximum file size which is a decimal number in kB which specifies the maximum JPEG file size generated after a snapshot is taken. The camera will try to reduce the quality in several steps to get the file size below the specified limit, and it will generate the minimum file possible if the goal could not be reached. The value 0 means no limit in size is required (no quality reduction is done over the one set in the Flash already). Other values represent maximum JPEG file size requirement in kilobytes, but please note that it may not be possible for HydroCam to satisfy this requirement, and in this case, it will start decreasing image quality internally, starting from the maximum possible quality, but without changing the quality parameter as stored in the Flash memory. As soon as the resulting JPEG file is at or below the required file size, the search will terminate and the file will be generated with the quality reached. If no requirement was met, the resulting file size will be whatever was accomplished in the last step.

#set_jpeg_maximum_size=<0-3000>

Night mode - Changes the camera mode according to the given parameter which can be either *off*, *on* or *auto*. In *off* mode, the IR filter in the camera is always active. In *on* mode, the IR filter is disabled and the camera gives a black and white image. In *auto* mode, the camera measures the current level of environmental illumination and automatically selects the optimal mode for the IR filter. Change of the night mode setting might be rejected if camera was currently running the operation depending on the night mode setting. Typical operations preventing the nigh mode change are taking the snapshot and running auto focus operation. To check if the change was applied, use the #get_info command.

#set_night_mode=on
#set_night_mode=off
#set_night_mode=auto

IR LED mode - Changes the camera's IR LED mode according to the given parameter which can be either *off*, *on* or *auto*. In *off* mode, the IR LEDs are always off. In *on* mode, the IR LEDs are on during the night, and off during the day. In *auto* mode, the IR LEDs are active only during image acquisition, autofocus or manual zoom or focus operations.

#set_ir_led_mode=on
#set_ir_led_mode=off
#set_ir_led_mode=auto

Autofocus point - Configures the point used for the autofocus operation. The x and y coordinates are specified as a percentage of the image size with (0,0) being at the bottom left. The values are in the 0 to 100 range. Change of autofocus coordinates does not apply until a new autofocus request is made using the command #run_autofocus. Please note that autofocus is also performed in the background of the zoom operation, but this autofocus does not use these autofocus point coordinates, as focus in that case is always in the middle of the image, i.e. the autofocus point is (50,50).

#set_autofocus_point=<x>,<y>

Autoexposure region - Configures the area used to measure brightness for the autoexposure operation. The x and y coordinates of the center of the area, as well as the width and height of the area are all specified as a percentage of the image size with (0,0) being at the bottom left. The values are in the 0 to 100 range. Please note that if there was a conflict in the values specified, while individual values were still within valid range, the HydroCam will accept and store values specified, but will prioritize the size of the region when calculating image brightness and determine exposure. For example, if the coordinates of the center of the region were x=20 and y=30, while the size of the area was determined by width=200 and height=100, the camera would conclude it was not possible to comply with both requirements and would consider the center to be at x=100 and y=50 when calculating the brightness.

#set_autoexposure_region=<x>,<y>,<width>,<height>

White balance offset - Configures the white balance offset parameters for the red, green, and blue color components. The values are numbers in the range of 8 to 48. Each parameter is used for its color respectively, internally divided by 10, and used as a multiplier for the default sensor analog gain for that particular color.

#set_wb_offset=<red>,<green>,<blue>

Color correction mode - Sets the color correction mode. Valid values are integers between 0 and 3. The resulting effect of value 0 is that white balance correction is turned off, and #get_info command will report the color correction as off. Values 1 to 3 result in the white balance algorithm running with different set of parameters defined for each mode. Please contact the Geolux support for more information about different color correction modes.

#set_color_correction_mode=<0-3>

Auto snapshot interval - Sets the time interval in minutes for autonomous periodic snapshot operation. A valid argument is the number of minutes between 0 and 65535, with 0 meaning there is no autonomous snapshot operation. If the interval is set to some valid non-zero value, the user should take care that a new snapshot is not requested before the previous one was transferred. This command does not make much sense if only UART is used transfer images as the transfer would not happen automatically, but if FTP upload is enabled, the image will also be transferred to the FTP server automatically. Please note that the camera needs to be powered on in order to take periodic snapshots, as there is no battery-operated clock, and the time interval is measured from the power up.

#set_auto_snapshot_interval=<0-65535>

Move focus - This command forces the camera to move the focus of the lens for a given number of steps. The value is in range of -100 to +100. The focus movement is relative to the starting focus position.

#move_focus=<-100-100>

Move zoom - This command forces the camera to change the lens zoom. The value is a number between 0 and 100. When the parameter is set to 0, the camera is fully zoomed out, and when it is set to 100 the camera is fully zoomed in.

#move_zoom=<0-100>

Change network settings:

DHCP - Enables or disables the HydroCam DHCP service. If DHCP is enabled, and if the network parameters are resolved, static network parameter values defined by the user will not be used, and values obtained through the DHCP will be used instead. Those values are the IP address, the IP subnet mask, and the default gateway IP address.

#set_net_dhcp_enabled=on
#set_net_dhcp_enabled=off

IP address - Sets the HydroCam IP address to be used if DHCP is disabled, or not running. The valid range for each octet (A to D) is from 0 to 255, but it is the user's responsibility to configure the network properly.

#set_net_ip_address=<A>.<B>.<C>.<D>

Subnet mask - Sets the HydroCam IP subnet mask to be used if DHCP is disabled, or not running. The valid range for each octet (A to D) is from 0 to 255, but it is the user's responsibility to configure the network properly.

#set_net_subnet_mask=<A>.<B>.<C>.<D>

Default gateway - Sets the HydroCam IP default gateway to be used if DHCP is disabled, or not running. The valid range for each octet (A to D) is from 0 to 255, but it is the user's responsibility to configure the network properly.

#set_net_default_gateway=<A>.<B>.<C>.<D>

FTP - Enables or disables the HydroCam FTP client. If FTP is enabled, and if the ethernet network is up and running, every snapshot taken will be uploaded to the FTP server defined by the user. The filename for upload is created from the HydroCAM camera's serial number and image counter. If the ethernet or FTP server is not operational while the snapshot is being taken, the image counter will still be incremented if FTP is enabled, so there would be gaps in image counters when ethernet operation is restored and new images are uploaded. The image counter does not increment if FTP is disabled. The FTP client works in passive mode.

#set_ftp_enabled=on
#set_ftp_enabled=off

Server name - Defines the FTP server name or the IP address. A valid *server_name* is any combination of up to 80 characters. The IP address could be used instead, if known and preferred by the user. The IP address entry could be convenient for testing purposes, in local networks without DNS, or when having direct connection to the laptop running the FTP server service. The HydroCAM does not check the validity of the server's name in any way, so it is the user's responsibility to configure the server name or the IP address correctly, including any firewall setting, public IP address setting, or port forwarding needed on the server side.

#set_ftp_server_name=<server_name>

Username - Defines the FTP username. A valid *user_name* is any combination of up to 30 characters. The HydroCam camera does not check the validity of the user's name in any way, so it is the user's responsibility to configure the name acceptable to the FTP server. Please note that the FTP protocol does not provide any security, and the data, including the username and password, is transferred in plain text over unsecured connection.

#set_ftp_user_name=<user_name>

Password - Defines the FTP password. A valid *password* is any combination of up to 30 characters. The HydroCAM camera does not check the validity of the password in any way, so it is the user's responsibility to configure the password acceptable to the FTP server. Please note that the FTP protocol does not provide any security, and data, including the username and password, is transferred in plain text over unsecured connection.

#set_ftp_password=<password>

FTP path - Path to the folder on the FTP server where the images will be uploaded.

#set_ftp_path=<path>

Retrieve current device status

#get_info

Requests the current device status. Here is an example status output:

```
#firmware:2.0.7
#serial_id:0
#resolution:800x600
#quality:75
#image_format:jpeg
#night_mode:auto
#ir_led_mode:auto
#ir_filter:on
#region_of_interest:0,100,0,0
#blackout_mode:off
#blackout_fill:pattern
#hdr_mode:off
#hdr_lo:50
#hdr_hi:150
#autofocus_point:50,50
#autoexposure_region:50,50,100,100
#lens_corr_mode:on
#device_type_980
#modbus_address:100
#modbus_baudrate:9600
#modbus_parity:N
#modbus_databits:8N
#modbus_stopbits:1
#jpeg_maximum_size:0
#wb_offset:10,10,13
#zoom_position:0
#focus_position:136
#net_ip_address:192.168.2.120
#net_subnet_mask:255.255.255.0
#net_default_gateway:192.168.2.1
#net_dhcp_enabled:on
#net_dhcp_address:192.168.2.45
#net_dhcp_subnet_mask:255.255.255.0
#net_dhcp_default_gateway:192.168.2.1
#ftp_enabled:on
#ftp_server_name:161.35.201.156
#ftp_path:/home/ftpuser/
#ftp_user_name:ftpuser
#ftp_password:ftppass
#auto_snapshot_interval:off
#ftp_last_transfer_status:success
```

6.2. Modbus Protocol (RS-485)

The unit responds to Modbus requests over RS-485 data line. The baud rate is configured through the PC application, and 1 stop bit, no parity, 8 data bits configuration is used.

Modbus registers that are accessed by Modbus protocol are 16-bit (2-byte) registers. Any number of registers can be read or written to over Modbus.

Modbus is a request-response protocol where a master (such as data logger) sends out requests, and slave devices (such as the HydroCam camera) respond. The request and response format, with examples is given in Tables 3-6.

In each request, the master can either ask the slave to retrieve the value of one or more registers, or the master can set the value of one or more registers. Each register holds one 16-bit value.

Table 3. Master Request Format

Name	Address	Fun	Data Start Address		Register Count		CRC16	
Length	1 byte	1 byte	2 bytes (H,L)		2 bytes (H,L)		2 bytes (L,H)	
Example	0x01	0x03	0x00	0x00	0x00	0x01	0x84	0x0A

Table 4. Request Example

Name	Content	Detail
Address	0x01	Slave address (Sensor id)
Function	0x03	Read holding register
Data start address	0x00	The address of the first register to read minus one (HIGH)
	0x00	The address of the first register to read minus one (LOW)
Number of regs	0x00	High
	0x01	Low (read only 1 register)
CRC16	0x84	CRC Low
	0x0A	CRC High

Table 5. Slave (sensor) Response Format

Name	Address	Fun	Byte Count	Data		CRC16	
Length	1 byte	1 byte	1 byte	2 bytes(H,L)		2 bytes(L,H)	
Example	0x01	0x03	0x02	0x01	0x79	0x84	0X0A

Table 6. Response Example

Name	Content	Detail
Address	0x01	Slave address (Sensor id)
Function	0x03	Read holding register
Data length	0x02	Data length is 2 bytes
Data	0x00	Data high byte
	0x01	Data low byte, means ID is 1
CRC16	0x79	CRC Low
	0x84	CRC High

Table 7 defines the data returned by the instrument when the master requests that the register is read. Table 8 defines how to write the device configuration. Rows highlighted in green denote operating parameters that could be changed in the field. In Tables 7 and 8, field *Fun* corresponds to Modbus function codes, i.e. 0x03 – *Read holding register* and 0x06 – *Write holding register*.

Table 7. Retrieving Data from the Sensor

Fun	Register Address	Data Length	Data Range	Details
0x03	0x0001	2 bytes	1 – 247 default → 100	Read Modbus ID
	0x0002	2 bytes	1200 2400 4800 9600 14400 19200 37400 57600 default → 9600	Read Modbus baud rate
	0x0003	2 bytes	78 → no parity 79 → odd parity 69 → even parity default → no parity	Read Modbus parity
	0x0004	2 bytes	8	Read Modbus data bits
	0x0005	2 bytes	1 → 1 stop bit 2 → 2 stop bits default → 1 stop bit	Read Modbus stop bits

Fun	Register Address	Data Length	Data Range	Details
0x03	0x0006	2 bytes	Device state right after reset. Default value depends on the reset reason, reading will get system watchdog reset reason with the following values used (result is bitwise OR operation of individual bits). 0x0001 → Software reset 0x0002 → Watchdog timeout 0x0004 → Watchdog enabled 0x0010 → Power on reset Example: Power on reset with watchdog enabled will return status 0x0014	Read system reset
	0x0007	2 bytes	0 – 9	Read firmware version - major
	0x0008	2 bytes	0 – 9	Read firmware version - minor
	0x0009	2 bytes	0 – 9	Read firmware version - patch
	0x000A	2 bytes	0 – 65535	Read serial number - higher 16 bits (Example: for value 0x12345678, this register is showing 0x1234)
	0x000B	2 bytes	0 – 65535	Read serial number - lower 16 bits
	0x000C	2 bytes	980	Read Device type
	0x000D	2 bytes	0 – 65535	Read Flash memory Vendor ID
	0x000E	2 bytes	0 – 65535	Read CMOS sensor Vendor ID
	0x000F	2 bytes	Higher 16 bits of 32-bit integer number showing HydroCam error status. Each bit (if set) represents specific error flagged during current device run. Errors are cleared (bits set to zero) after restart, and not stored in any permanent memory. Contact Geolux support for specific errors description as they might depend on firmware and device version.	Read error status - higher 16 bits (Example: for value 0x12345678, this register is showing 0x1234)
	0x0010	2 bytes	Lower 16 bits of 32-bit integer number showing HydroCam error status. Each bit (if set) represents specific error flagged during current device run. Errors are cleared (bits set to zero) after restart, and not stored in any permanent memory. Contact Geolux support for specific errors description as they might depend on firmware and device version.	Read error status - lower 16 bits

AKRIBIS · www.akribis.info · contacto@akribis.info

Fun	Register Address	Data Length	Data Range	Details
0x03	0x0011 – 0x0014	2 bytes	0	Reserved - always 0
	0x0015	2 bytes	160 320 640 800 1024 1280 1600 1920 2048 2592 default → 800	Read image resolution - x (width)
	0x0016	2 bytes	120 240 480 600 768 960 1200 1080 1536 1944 default → 600	Read image resolution - y (height)
	0x0017	2 bytes	1 – 100	Read image quality
	0x0018	2 bytes	0 → always on 1 → always off 2 → auto default → 2	Read night mode
	0x0019	2 bytes	0 → night, IR filter is off 1 → day, IR filter is on	Read night state
	0x001A	2 bytes	0 → night, IR filter is off 1 → day, IR filter is on	Read IR filter state
	0x001B	2 bytes	0 → IR LEDs alway on during the night 1 → IR LEDs alway off during the night 2 → IR LEDs in auto mode default → 2	Read IR LED mode
	0x001C	2 bytes	0 → IR LEDs turned off 1 → IR LEDs turned on	Read IR LED state

Fun	Register Address	Data Length	Data Range	Details
0x03	0x001D	2 bytes	0 – 100 Change of autofocus coordinates does not apply until a new autofocus request is made by writing 1 to register 0x001F. Please note that autofocus is also performed in the background of the zoom operation, but this autofocus does not use these autofocus point coordinates, as focus in that case is always in the middle of the image, i.e. the autofocus point is (50,50).	Read autofocus point x coordinate, as a percentage of the width of the image
	0x001E	2 bytes	0 – 100 Change of autofocus coordinates does not apply until a new autofocus request is made by writing 1 to register 0x001F. Please note that autofocus is also performed in the background of the zoom operation, but this autofocus does not use these autofocus point coordinates, as focus in that case is always in the middle of the image, i.e. the autofocus point is (50,50).	Read autofocus point y coordinate, as a percentage of the height of the image
	0x001F	2 bytes	0 → camera ready to take a snapshot or to restart autofocus 1 → camera busy performing autofocus	Read autofocus state
	0x0020	2 bytes	0 – 100 default → 50 (center of image)	Read autoexposure - x coordinate of the center of autoexposure area, as a percentage of the width of the image
	0x0021	2 bytes	0 – 100 default → 50 (center of image)	Read autoexposure - y coordinate of the center of autoexposure area, as a percentage of the height of the image
	0x0022	2 bytes	0 – 100 default → 100 (whole image)	Read autoexposure - width of autoexposure area, as a percentage of the width of the image
	0x0023	2 bytes	0 – 100 default → 100 (whole image)	Read autoexposure - height of autoexposure area, as a percentage of the height of the image

Fun	Register Address	Data Length	Data Range	Details
0x03	0x0024	2 bytes	0 → camera ready to take a snapshot 1 → snapshot in progress	Read take snapshot status
	0x0025	2 bytes	0 – 100	Read absolute zoom position of last zoom operation
	0x0026	2 bytes	0 – 1050	Read absolute focus position of last focus operation
	0x0027	2 bytes	0 → image is ready to be downloaded via RS-232 interface or the snapshot was not requested because the camera was powered up (check registers 0x0028 and 0x0029) Other → image processing is ongoing and the image cannot be retrieved yet. A bit more information can be obtained based on individual bit states: 0x01 – snapshot in progress 0x02 – autofocus or zoom operation in progress 0x04 – autoexposure operation in progress Those bits are combined into a final register value by using bitwise OR operation as all may be active simultaneously.	Read image status
	0x0028	2 bytes	0 – 65535	Read image size - higher 16 bits (Example: for value 0x12345678, this register is showing 0x1234)
	0x0029	2 bytes	0 – 65535	Read image size - lower 16 bits
	0x002A	2 bytes	0 – 3000	Read JPEG maximum size in kB
	0x002B	2 bytes	8 – 48 default → 10	Read white balance offset - red
	0x002C	2 bytes	8 – 48 default → 10	Read white balance offset - green
	0x002D	2 bytes	8 – 48 default → 10	Read white balance offset - blue
	0x002E	2 bytes	0 – 3	Read color correction mode
	0x002F	2 bytes	0 – 65535	Read auto snapshot interval in minutes

Fun	Register Address	Data Length	Data Range	Details
0x03	0x0030 - 0x0032	2 bytes	0	Reserved - always 0
	0x0033	2 bytes	1 – 4000	Read exposure time (shutter width)
	0x0034	2 bytes	1 – 65535 Value 1 indicates the camera was in day mode, so no additional analog gain was needed. Any value above 1 should be present only in low light conditions.	Read shutter gain
	0x0035	2 bytes	0 – 65535	Read mean brightness
	0x0036	2 bytes	0 – 100	Read quality used - represents the quality level actually used for the last snapshot which might differ from the one set by the user
	0x0037 - 0x003C	2 bytes	0	Reserved - always 0
	0x003D	2 bytes	0 – 255	Read IP address - first octet
	0x003E	2 bytes	0 – 255	Read IP address - second octet
	0x003F	2 bytes	0 – 255	Read IP address - third octet
	0x0040	2 bytes	0 – 255	Read IP address - fourth octet
	0x0041	2 bytes	0 – 255	Read subnet mask - first octet
	0x0042	2 bytes	0 – 255	Read subnet mask - second octet
	0x0043	2 bytes	0 – 255	Read subnet mask - third octet
	0x0044	2 bytes	0 – 255	Read subnet mask - fourth octet
	0x0045	2 bytes	0 – 255	Read default gateway - first octet
	0x0046	2 bytes	0 – 255	Read default gateway - second octet
	0x0047	2 bytes	0 – 255	Read default gateway - third octet
	0x0048	2 bytes	0 – 255	Read default gateway - fourth octet
	0x0049	2 bytes	0 → disabled 1 → enabled	Read DHCP state
	0x004A	2 bytes	0 – 12 Contact Geolux support for specific DHCP state descriptions.	Read DHCP last state

AKRIBIS · www.akribis.info · contacto@akribis.info

Fun	Register Address	Data Length	Data Range	Details
0x03	0x004B	2 bytes	0 → disabled 1 → enabled	Read FTP state
	0x004C	2 bytes	0 – 65535	Read image counter - higher 16 bits
	0x004D	2 bytes	0 – 65535	Read image counter - lower 16 bits
	0x004E	2 bytes	0 – 255	Read MAC address - first octet
	0x004F	2 bytes	0 – 255	Read MAC address - second octet
	0x0050	2 bytes	0 – 255	Read MAC address - third octet
	0x0051	2 bytes	0 – 255	Read MAC address - fourth octet
	0x0052	2 bytes	0 – 255	Read MAC address - fifth octet
	0x0053	2 bytes	0 – 255	Read MAC address - sixth octet

Table 8. Writing Data to the Sensor

Fun	Register Address	Data Length	Data Range	Details
0x06	0x0001	2 bytes	1 – 247	Change Modbus ID
	0x0002	2 bytes	1200 2400 4800 9600 14400 19200 37400 57600 default → 9600	Change Modbus baud rate
	0x0003	2 bytes	78 → no parity 79 → odd parity 69 → even parity default → no parity	Change Modbus parity
	0x0005	2 bytes	1 → 1 stop bit 2 → 2 stop bits default → 1 stop bit	Change Modbus stop bits
	0x0006	2 bytes	0xFFFF (65535)	Write system reset
	0x0015	2 bytes	160 320 640 800 1024 1280 1600 1920 2048 2592 default → 800 Changing this value automatically changes the value in register 0x0016 to the corresponding value.	Change image resolution - x (width)
	0x0016	2 bytes	120 240 480 600 768 960 1200 1080 1536 1944 default → 600 Changing this value automatically changes the value in register 0x0015 to the corresponding value.	Change image resolution - y (height)

Fun	Register Address	Data Length	Data Range	Details
0x06	0x0017	2 bytes	1 – 100	Change image quality
	0x0018	2 bytes	0 → always on 1 → always off 2 → auto default → 2 Changing the night mode setting might be rejected if the camera was currently running the operation depending on the night mode setting. Users could read back the register in order to make sure the change was applied. Typical operations preventing the nigh mode change are taking the snapshot and running auto focus operation.	Change night mode
	0x001B	2 bytes	0 → IR LEDs alway on during the night 1 → IR LEDs alway off during the night 2 → IR LEDs in auto mode default → 2	Change IR LED mode
	0x001D	2 bytes	0 – 100 The change written to this register is not applied until a new autofocus request is made by writing 1 to register 0x001F.	Change autofocus point x coordinate, as a percentage of the width of the image
	0x001E	2 bytes	0 – 100 The change written to this register is not applied until a new autofocus request is made by writing 1 to register 0x001F.	Change autofocus point y coordinate, as a percentage of the height of the image
	0x001F	2 bytes	1 Please note that if value 1 was written without checking the register first, it would not be an invalid operation, but it could result in no operation from the camera simply because it was not ready for new autofocus yet. Always check the register first. If the value is 0, the camera is ready for autofocus - write the value 1 and wait for the value to be 0 again indicating the autofocus procedure is finished.	Write autofocus request

Fun	Register Address	Data Length	Data Range	Details
0x06	0x0020	2 bytes	0 – 100 default → 50 (center of image)	Change autoexposure - x coordinate of the center of autoexposure area, as a percentage of the width of the image
	0x0021	2 bytes	0 – 100 default → 50 (center of image)	Change autoexposure - y coordinate of the center of auto-exposure area, as a percentage of the height of the image
	0x0022	2 bytes	0 – 100 default → 100 (whole image)	Change autoexposure - width of autoexposure area, as a percentage of the width of the image
	0x0023	2 bytes	0 – 100 default → 100 (whole image)	Change autoexposure - height of autoexposure area, as a percentage of the height of the image
	0x0024	2 bytes	1 Please note that if value 1 was written without checking the register first, it would not be an invalid operation, but it could result in no operation from the camera simply because it was not ready to take a new snapshot yet. Always check the register first. If the value is 0, the camera is ready to take a snapshot - write the value 1 and wait for the value to be 0 again indicating the snapshot was taken and the image is available.	Write take snapshot
	0x0025	2 bytes	0 – 100 After writing the absolute zoom value, reading back should return the same value if the request was accepted. If not, periodically check register 0x0027 and wait unit it returns value 0 indicating no activity that would prevent zoom from being moved is in progress. Then repeat the write absolute zoom operation and check it again.	Change absolute zoom position

Fun	Register Address	Data Length	Data Range	Details
0x06	0x0026	2 bytes	-100 – 100 After writing the relative focus value, reading back should return new (absolute) focus value if the request was accepted. If not, periodically check register 0x0027 and wait unit it returns value 0 indicating no activity that would prevent focus from being moved is in progress. Then repeat the write relative focus operation and check it again.	Change relative focus position
	0x002A	2 bytes	0 – 3000	Change JPEG maximum size in kB
	0x002B	2 bytes	8 – 48 default → 10	Change white balance offset - red
	0x002C	2 bytes	8 – 48 default → 10	Change white balance offset - green
	0x002D	2 bytes	8 – 48 default → 10	Change white balance offset - blue
	0x002E	2 bytes	0 – 3	Change color correction mode
	0x002F	2 bytes	0 – 65535	Change auto snapshot interval
	0x0049	2 bytes	0 → disabled 1 → enabled	Change DHCP state
	0x004B	2 bytes	0 → disabled 1 → enabled	Change FTP state

7 Communication Flow Diagram

Picture 3. shows a flow diagram of the communication between the client and the HydroCam camera to get the image from the camera.

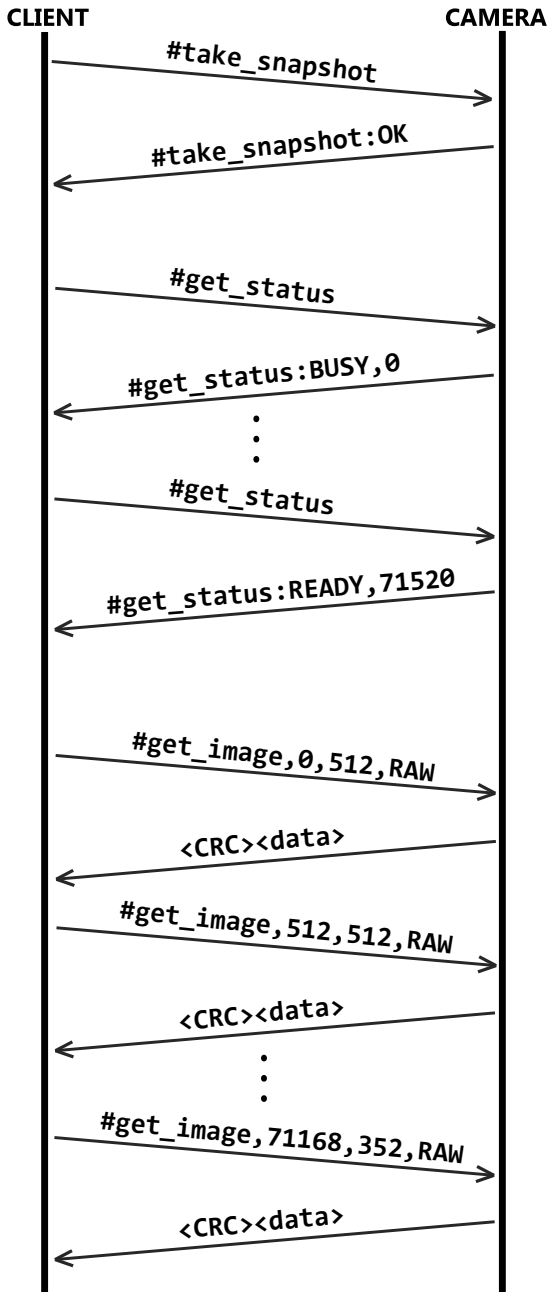

Picture 3. Communication Flow Diagram

8 Camera Configurator Utility

Geolux provides a user-friendly PC application, Geolux Instrument Configurator, for setting up the HydroCam camera's operating parameters as well as displaying the images taken by the camera.

When started, the Geolux Instrument Configurator displays its main window. Picture 4. shows the Geolux Instrument Configurator main window on start-up.

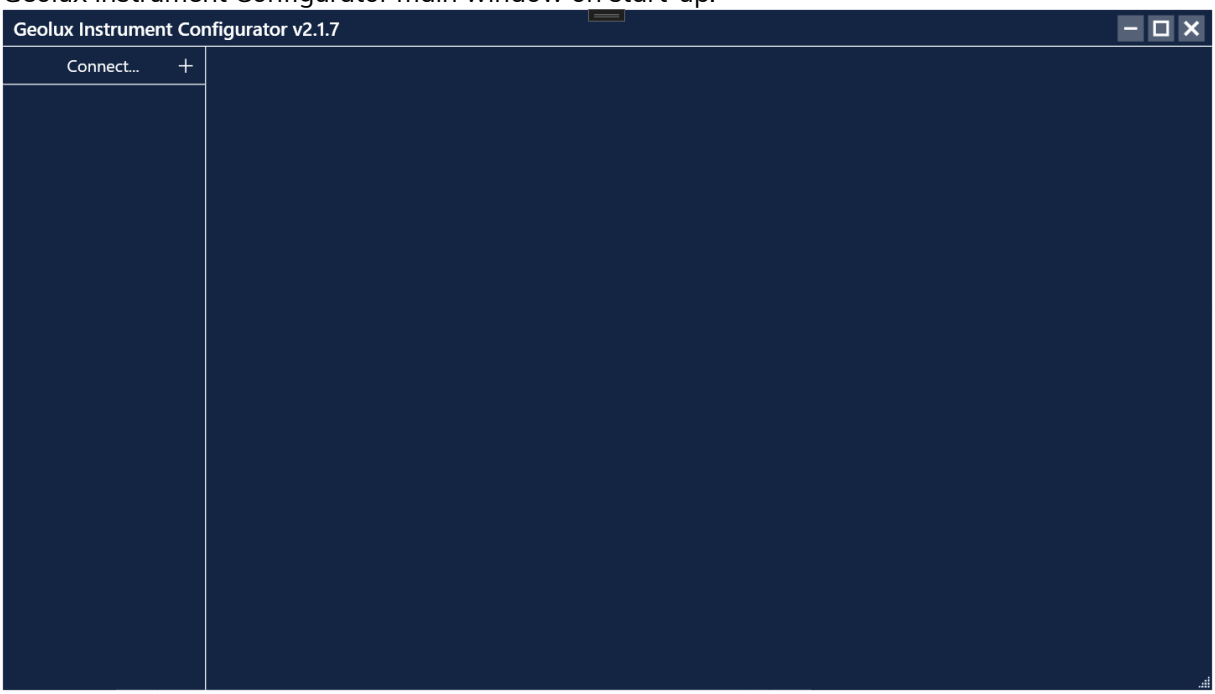

Picture 4. Geolux Instrument Configurator Main Window

To connect the Geolux Instrument Configurator with the instrument, connect your PC to the camera using a serial cable connection. Then, click the *Connect* button in the upper left corner and select HydroCam from the window which appears. In the next window, select the appropriate COM port. If RS-485 interface is selected, additionally select the baud rate, parity, stop bits and the Modbus ID. In case of multiple devices connected on a single RS-485 bus, make sure that each device has a unique Modbus ID. When the *Connect* button is clicked, Geolux Instrument Configurator will try to establish a data link between your PC and the camera. If the connection is successful, the device will appear under *Connected devices* and the *Settings* tab will be displayed as shown in Picture 5. Instrument settings are sorted into 2 groups: *Modbus settings*, *Camera parameters* and *Network settings*. By clicking the name of a specific group, all the settings which belong to that group can be viewed and changed. The following settings are displayed:

Modbus settings	**Camera parameters**	**Network settings**
Modbus baud rate	Resolution	DHCP
Modbus ID	Quality	IP address
Modbus parity	JPEG max size	Subnet mask
Modbus stop bits	Night mode	Default gateway
	IR LED mode	FTP
	Autofocus point	Server name
	Autoexposure region	Username
	White balance offset	Password
	Color correction mode	FTP path
	Auto snapshot interval	

AKRIBIS · www.akribis.info · contacto@akribis.info

A detailed description of the selected parameter appears on the right side of the window when the user clicks on, or begins to change, a specific setting. When a setting is changed, the *Set* button will appear next to the setting. By clicking the *Set* button, the user confirms the change and the new setting is saved. The *Update firmware* button allows the user to update the firmware of the device while the *Export parameters* button exports the current settings to .txt file.

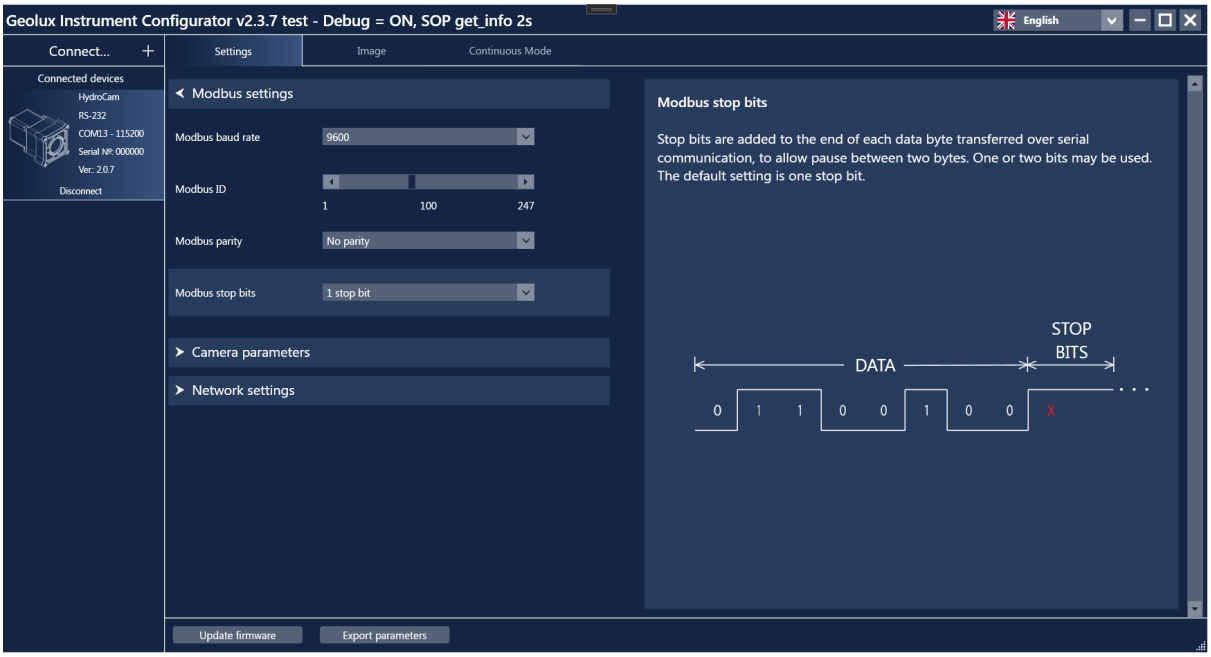

Picture 5. Geolux Instrument Configurator - Settings View

Navigating to the *Image* tab allows the user to change the zoom and focus of the camera in specific steps by sliding the scroll bar and clicking the *Move zoom* or *Move focus* button. To capture an image with the camera, the first step is to click the *Take snapshot* button. After the snapshot has been taken the *Get image* button must be clicked. When the image is ready, it will be displayed in the right part of the window shown in Picture 6. The captured image can be saved as a .jpg file by clicking the *Save image* button.

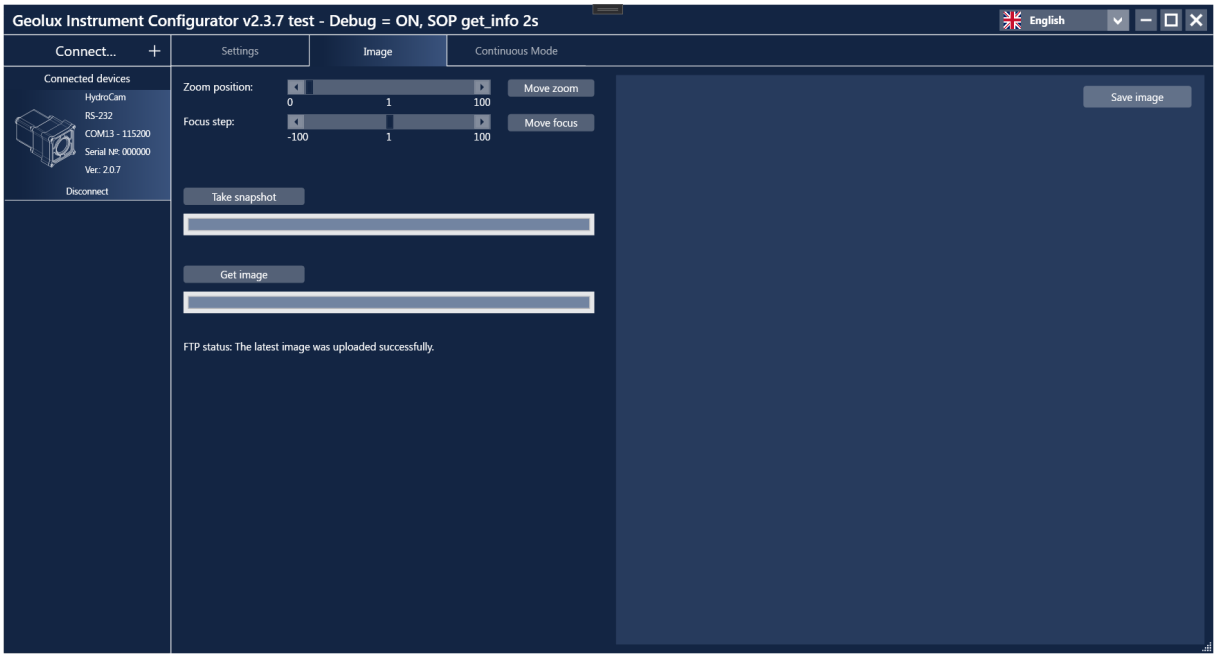

Picture 6. Geolux Instrument Configurator - Image View

If FTP is enabled in the *Settings* tab, the FTP status will be shown in the left part of the window.

The FTP status can be one of the following:

- The FTP server's IP address cannot be reached or resolved.
- The FTP login was rejected. Check the username and password.
- The upload path on the FTP server is invalid or access is denied.
- No internet connection.
- No upload attempts have been made yet.
- The latest image was uploaded successfully.

If a status indicating an error (one of the first 4) is displayed, the error will only be updated after an upload attempt has been made, or when FTP is disabled in the configuration. All errors are cleared when the camera loses power; after reboot, the status resets to *No upload attempts have been made yet*.

9 Troubleshooting

Problem	Possible solutions
The instrument does not connect to the PC application over RS-232 connection.	**1. Make sure that the cable is properly connected to the instrument** Check that the cable M12 circular connector is firmly connected and screwed to the instrument. It is not sufficient to simply attach the cable connector to the instrument connector, the cable connector must be screwed into the instrument connector. **2. Check power supply** Make sure that the power is being supplied to the instrument. A direct-current voltage, between 9 and 27 Volts must be connected to brown (+) and white (-) wires of the instrument cable. The power supply must be able to deliver at least 500 mA of current. **3. Check RS-232 connector** The yellow, green and grey wires from the instrument cable must be properly connected to the serial port on the computer. Make sure that the grey wire (signal ground) is connected – the RS-232 connection will not work if the signal ground is not connected. Also, make sure that the yellow (device Rx) and green (device Tx) are properly connected. If you are using a standard DB9 type connector on the PC computer, the wires should be connected like in the following diagram: 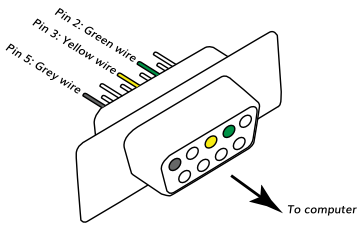 **4. Make sure that you are using the correct COM port** If there are multiple COM ports available on your computer, make sure that you are selecting the correct COM port in the PC application. If you are not certain which COM port number is assigned to the COM port that is being used to establish a connection with the instrument, try setting up the connection with each COM port available in the system, until the connection is established. 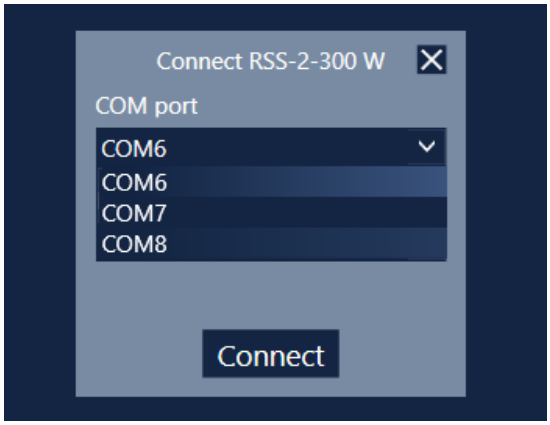

	5. Make sure that the COM port is not already open Only one application may use a single COM port in the system. Make sure that no other open application uses the same COM port that you are trying to open. **6. Try restarting the application and/or the computer** Close and reopen the configurator application and try to establish the connection again. Restart your computer and try to establish the connection to the instrument again.
The instrument does not respond over Modbus (RS-485) interface.	**1. Make sure that the cable is properly connected to the instrument** Check that the cable M12 circular connector is firmly connected and screwed to the instrument. It is not sufficient to simply attach the cable connector to the instrument connector, the cable connector must be screwed into the instrument connector. **2. Check power supply** Make sure that the power is being supplied to the instrument. A direct-current voltage, between 9 and 27 Volts must be connected to brown (+) and white (-) wires of the instrument cable. The power supply must be able to deliver at least 500 mA of current. **3. Check RS-485 connector** Make sure that the RS-485 lines on the instrument cable are properly connected to the RS-485 connector. The dark red wire should be connected to D+ line, and the orange line should be connected to D- line. Make sure that the D+ and D- lines are not swapped. Make sure that you have correctly identified and connected the dark red (magenta) wire, as there is also another bright red wire that is used to provide output power for 4-20 mA output. It is possible to misidentify the wire and to connect the bright red wire to D+ instead of dark red wire. **4. Check that you are using the correct slave device ID** The default Modbus device ID is 1. The Modbus device ID can be changed by connecting the instrument to the PC application (over RS-232 connection). Connect the instrument to the PC using RS-232 connection. Open the Geolux Instrument Configurator application and establish a connection between the instrument and the PC. Then check the *Modbus ID* parameter and make sure that it is the same as the slave device ID used in issued Modbus requests. **5. Make sure that there are no two devices on the bus with the same Device ID.** Modbus allows to have multiple devices connected on the same bus simultaneously. Each device must have a unique slave device ID assigned, so that the bus master can distinguish between the devices. If two or more devices are assigned the same slave device ID, a bus conflict will happen and prohibit the master to correctly communicate with the slave devices. To resolve this problem, change the instrument's slave device ID to a unique number through the Geolux Instrument Configurator PC application.

	6. Check that you are using the correct Modbus connection parameters (baud rate, parity, stop bits) The default Modbus connection parameters are 9600 bps, no parity, 1 stop bit. These parameters can be changed by connecting the instrument to the PC application (over RS-232 connection). Connect the instrument to the PC using RS-232 connection. Open the Geolux Instrument Configurator application and establish a connection between the instrument and the PC. Then check and verify that all Modbus connection parameters are correct.

10 Appendix A - Mechanical Assembly

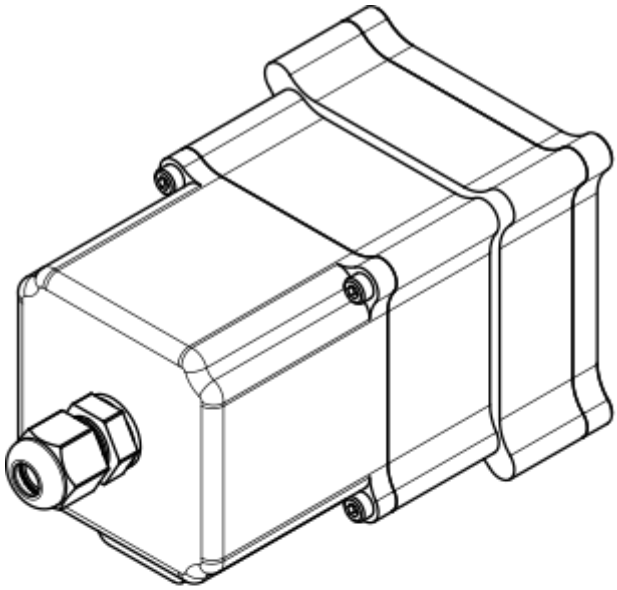

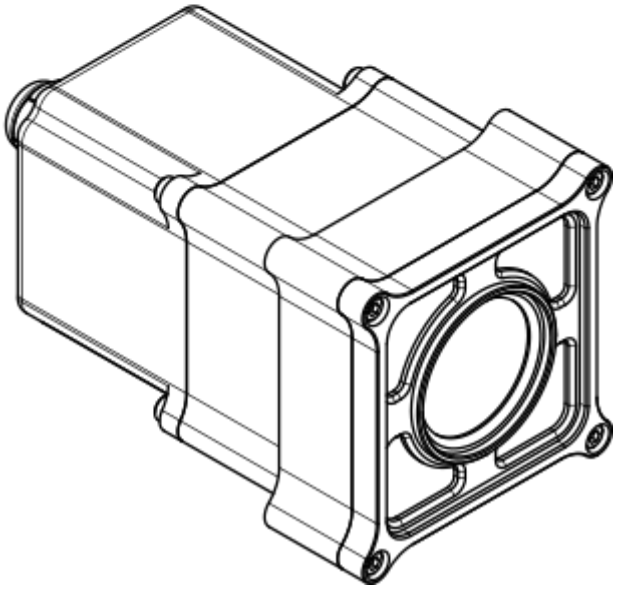

2026.