USER GUIDE

HY10.10.HRP.H

Radwag

Distributed by AKRIBIS

User manual

IMMU-31-12-10-22-EN

HRP Weighing Platforms

High Resolution Platforms

radwag.com

Scan the QR code to view additional scientific material that may be of interest to you.
There you will find more useful information in an accessible format!

AKRIBIS www.akribis.info contacto@akribis.info

OCTOBER 2022

CONTENTS

1. GENERAL INFORMATION 4
1.1. Dimensions 4
1.2. Connectors Arrangement 6
1.3. Technical Specifications 9
1.4. Intended Use 9
1.5. Good Weighing Practice 10
1.6. Temperature Stabilization Time 11
1.7. Warranty Conditions 12
1.8. Supervision over Metrological Parameters 12
1.9. User Manual Significance 12
1.10. Operator Training 13
1.11. Maintenance 13
2. UNPACKING AND INSTALLATION 15
2.1. Place of Use 15
2.2. Unpacking and Installation 15
2.3. HRP 16, 32 Platform 16
2.4. HRP 62, 120, 150 Platform 17
2.5. HRP 150, 300 Platform 18
2.6. HRP 300.1, 600, 1100 Platform 21
2.7. HRP 2000 Platform 25
3. ADJUSTMENT 30
3.1. Operator Start Mass 31
4. COMMUNICATION PROTOCOL 32
4.1. Communication with Module 32
4.2. Default Communication Parameters 32
4.3. HRP Configuration Using MWMH-Manager 33
4.3.1. Alibi Memory - Weighings Database 33
4.4. Cooperation with Weighing Indicators 34
4.5. Cooperation with R-LAB Program 34
4.6. Radwag Communication Protocol 34
4.7. Commands Overview 37
4.8. Error Messages 49
4.9. Communication and Power Supply Cables 49
4.10. Platform Power Supply 52
5. TRANSPORT AND STORAGE 53
5.8. Delivery Check 53
5.9. Packaging 53

1. GENERAL INFORMATION

1.1. Dimensions

HRP 16, 32

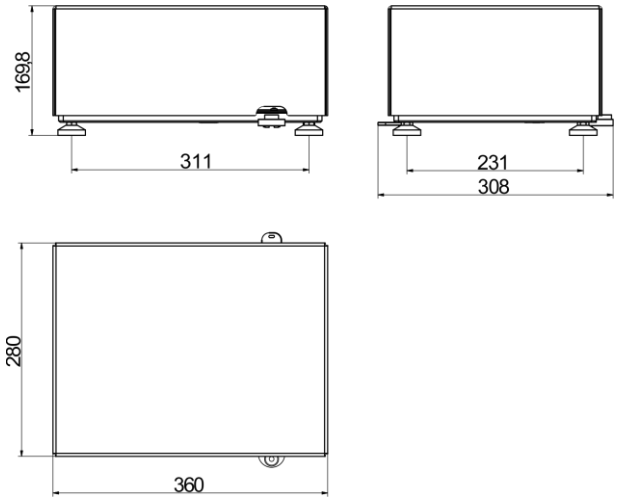

HRP 62, 120, 150

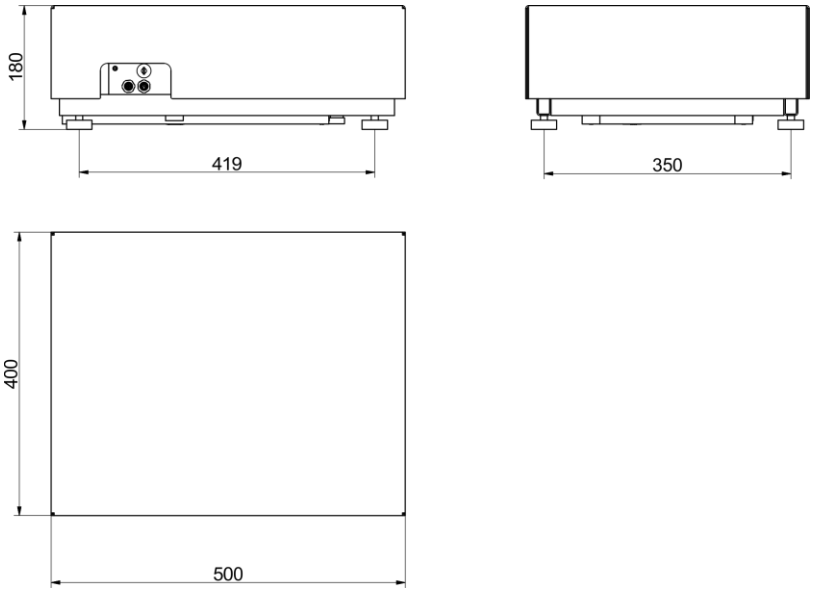

HRP 150, 300

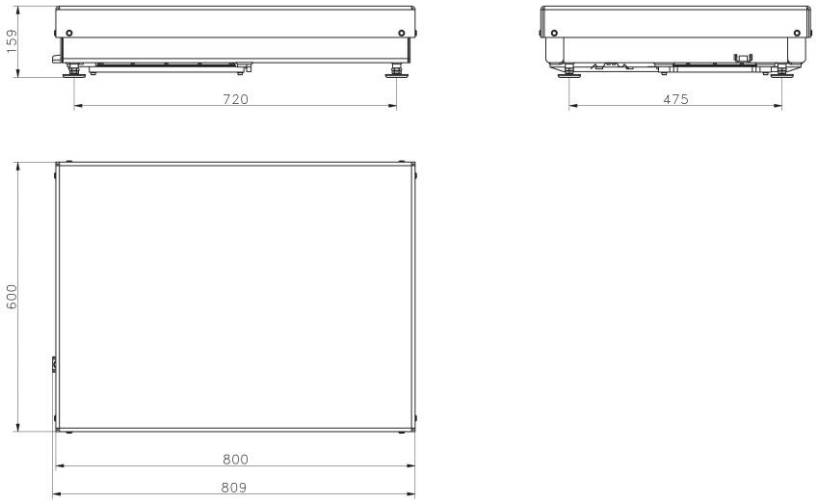

HRP 300.1, 600, 1100

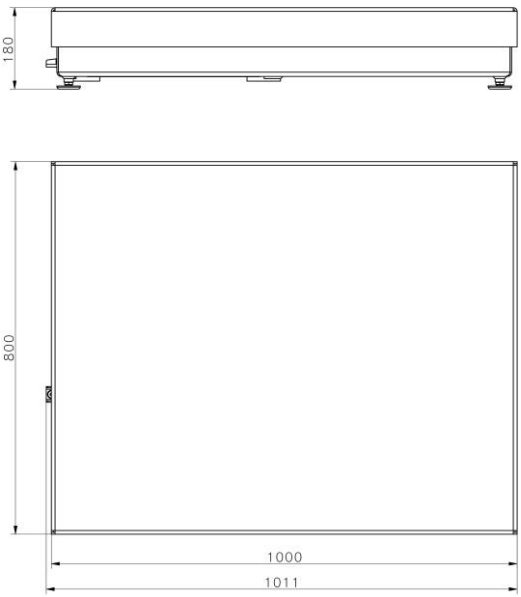

HRP 2000

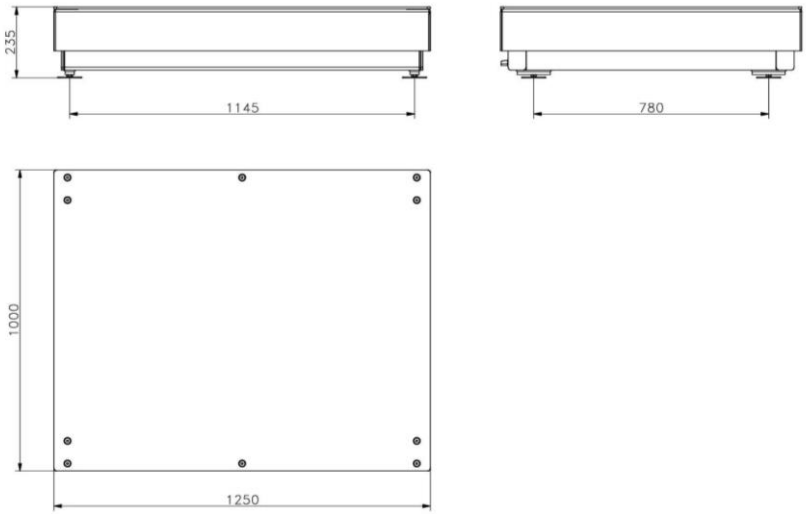

1.2. Connectors Arrangement

HRP 16, 32

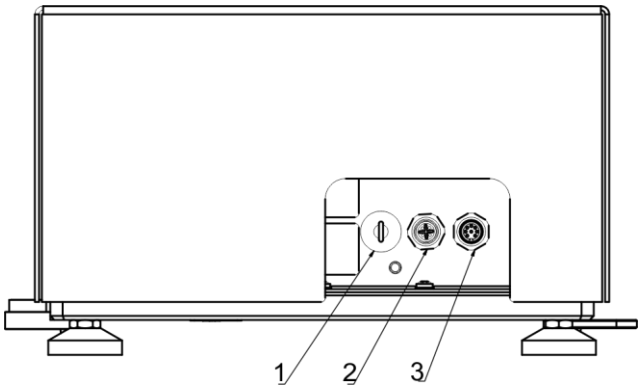

HRP 62, 120, 150

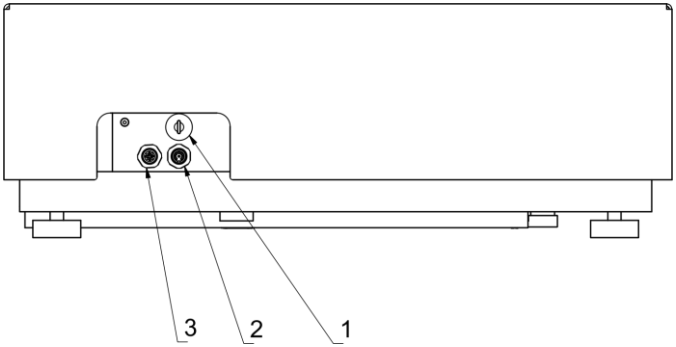

HRP 150, 300, 300.1, 600, 1100

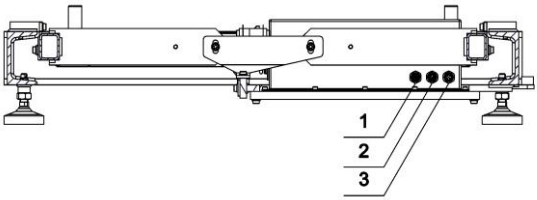

HRP 2000

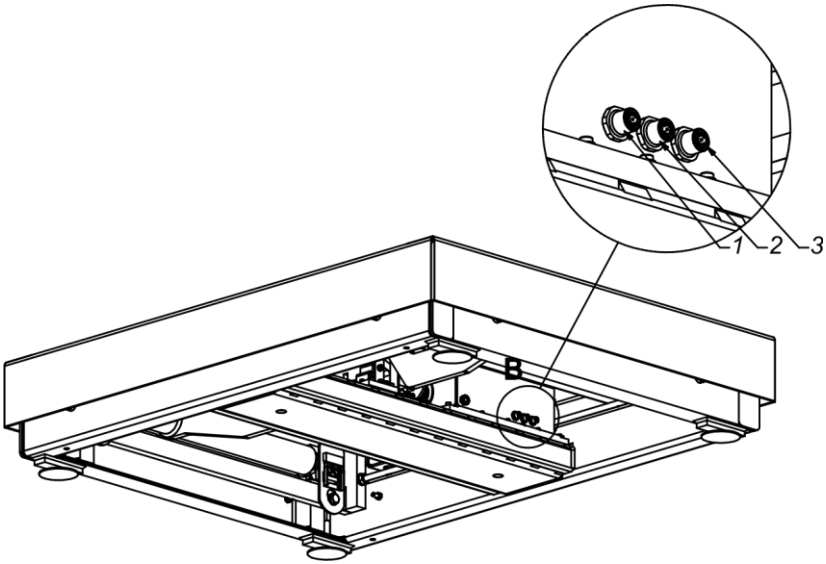

Connectors arrangement for: HY 10.xx. HRP; PUE7.1.xx.HRP

1	2	3
		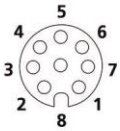
No connector	No connector	HY10; PUE7.1; PC + power supply

Connectors arrangement for: PL.xx HRP with Ethernet and IN/OUT

1	2	3
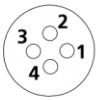	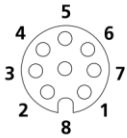	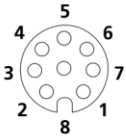
ETHERNET	IN/OUT (optional connector)	RS232, RS485 + power supply

Connectors arrangement for: PL.xx HRP with Profibus

1	2	3
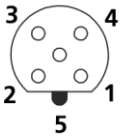	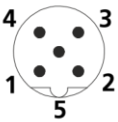	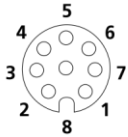
Profibus OUT	Profibus IN	RS 232 + power supply

1.3. Technical Specifications

Power supply	12 ÷ 24 V DC
Operating temperature	+10 - +40 °C
Relative humidity	15% ÷ 80%
Ingress protection	IP 66/67 (for cleaning purposes)
Outputs supply voltage	12 ÷ 24 V DC
Max outputs current	100 mA
Control voltage range for outputs	12 ÷ 24 V DC

1.4. Intended Use

The series of HRP professional high resolution platforms suits every single branch of industry. HRP series is perfect for applications requiring high accuracy, precision and repeatability of measurement in challenging industrial environment.
Automatic adjustment performed by means of an internal adjustment weight is a warranty for a remarkably effective operation and repeatability of indications. The automatic adjustment saves time and lets to avoid performing the process manually, making it comfortable and easy.

Features:

- Brand new design of the electromagnetic mechanism housed in a stainless steel dust-proof and waterproof casing,
- High ingress protection IP67,
- Communication interfaces: RS 232,RS 485, Ethernet, optionally: Profibus and IN/OUT for cooperation with peripheral devices,
- Cooperation with HY 10, PUE 7.1 and PUE 5 indicators,
- Cooperation with MWMH-Manager software.

1.5. Good Weighing Practice

A. Prior the first use, carefully read this User Manual. Use the platform only as intended;

B. Place weighed loads in the centre of the weighing pan;

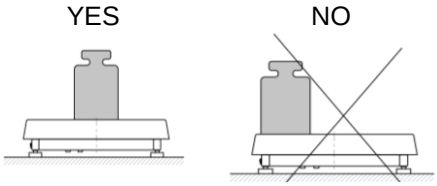

C. Load the weighing pan with loads of gross weight which does not exceed maximum capacity;

D. In case of eccentric loading make sure that:
a) The weight of loads placed close to one of the pan edges does not exceed ½ of max capacity,
b) The weight of loads placed in the pan corner does not exceed ⅓ of max capacity.

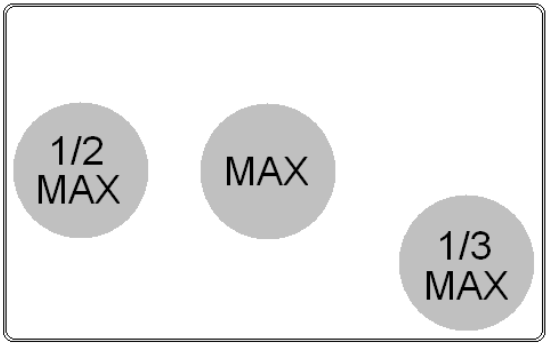

E. Mind not to leave heavy loads on the weighing pan for longer periods of time;

F. Avoid side shocks;

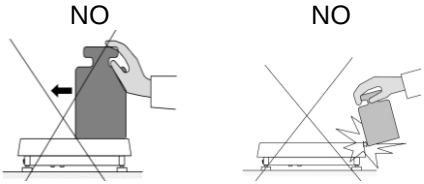

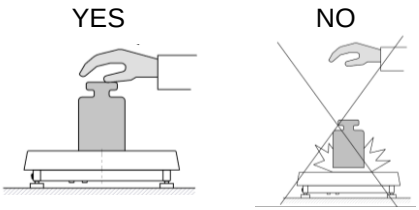

G. In case of damage, immediately unplug the device from the mains.
H. Platform to be decommissioned, should be decommissioned in accordance with valid legal regulations;

1.6. Temperature Stabilization Time

Before start of the measuring processes, it is necessary to wait until the platform reaches thermal stabilisation.
Platforms stored in much lower temperatures than the workroom temperature, before being plugged to the mains (e.g. during winter period), must be subjected to thermal stabilisation. The thermal stabilisation period takes about 8 hours. During the thermal stabilization, the indications on the screen can change. Potential workroom temperature change shall occur gradually and slowly in the course of the weighing instrument operation.

1.7. Warranty Conditions

A. RADWAG feels obliged to repair or exchange all elements that appear to be faulty by production or by construction.
B. Defining defects of unclear origin and means of their elimination can only be realized with assistance of manufacturer and user representatives.
C. RADWAG does not bear any responsibility for damage or losses resulting from unauthorized or inadequate performing of production or service processes.
D. The warranty does not cover:
   - mechanical damage caused by product exploitation other than intended, damage of thermal and chemical origin, damage caused by lightning, overvoltage in the power network or other random event,
   - damage caused by product exploitation other than intended,
   - mechanical damage, if service claims removing or destroying protective stickers which secure the platform's housing against unauthorized access,
   - damage caused by liquids, water and natural wear,
   - damage caused by inappropriate setting or by electrical wiring failures,
   - damage caused by overloading of the mechanical measuring system,
   - inappropriate cleaning habits.
E. Loss of warranty takes place if:
   - a repair is carried out outside RADWAG authorized service point,
   - service claims intrusion into mechanical or electronic construction by unauthorized people,
   - the platform does not bear company security stickers.
F. For detailed warranty conditions read the warranty certificate.

1.8. Supervision over Metrological Parameters

Metrological parameters need to be checked in determined time intervals. Inspection frequency is conditioned by ambient conditions in which the module is used, kind of carried out processes and adopted quality management system.

1.9. User Manual Significance

Even if you are experienced and have worked with this type of device before it is very important to read the installation manual carefully before switching it on.

1.10. Operator Training

The platform should be utilized and supervised only by users who have been trained to operate such type of a weighing instrument.

1.11. Maintenance

Caution:

- *Be careful so as not to damage the mechanism.*
- *For maintenance use mild cleanser preventing corrosion.*
- *Avoid directing strong stream of water directly onto weighing module's gasket membrane.*

Cleaning stainless steel components

When cleaning stainless steel components, the following table should be followed, which lists the types of contamination and ways of removing it.

Type of contamination	***Method of removal***
Fingerprints	Clean with alcohol or dilutant. Rinse with clean water and wipe dry.
Oils, fats, greases	Wash with organic solvents and then clean with warm water with soap or mild detergent. Rinse with clean water and wipe dry.
Temperature stains and discolorations	Wash with a gentle abrasive cleaner, clean lightly according to the direction of the surface structure. Rinse with clean water and wipe dry.
Strong discoloration	Clean lightly according to the direction of the surface structure. Rinse with clean water and wipe dry.
Traces of rust	Moisten with oxalic acid solution and leave for about 15-20 minutes, then wash with warm water with soap or mild detergent. Rinse with clean water and wipe dry.
Paints	Wash with paint solvent and then rinse with warm water with soap or mild detergent. Rinse with clean water and wipe dry.
Scratches on the surface	Gently polish the surface with a non-woven fabric (iron-free) according to the direction of the surface structure. Wash with a gentle abrasive cleaner. Rinse with clean water and wipe dry.

Cleaning Powder-Coated Components

For preliminary cleaning process stage you need running water or wet sponge featuring large holes, this will help you to remove loose, heavy dirt.

Do not use cleansers containing abrasive substances.

Next, using cloth and cleanser-water solution (soap, dishwashing liquid) gently rub the cleaned surface.

Avoid using cleanser without water since it may result with damage of the cleaned surface, please mind that large amount of water mixed with cleanser is a must.

Cleaning Aluminium Components

While cleaning aluminium components use products acid by nature, e.g. spirit vinegar, lemon. Do not use cleansers containing abrasive substances. Avoid using hard brush, this may cause scratches. It is recommended to use microfibre cloth.

While polishing the surface use circular movements. Use clean, dry cloth to make the surface shine. For best results, add a little bit of dishwashing detergent.

2. UNPACKING AND INSTALLATION

2.1. Place of Use

* Make sure that the ambient temperature ranges between +10 °C ÷ +40 °C
* Make sure that the relative humidity is not higher than 80%,
* Slow temperature change in the course of operation,
* Ground the module's base should static electricity affect the weighing result.

2.2. Unpacking and Installation

Cut the adhesive tape. Take the device out of the packaging.
Open the accessory box, take the device components out of it and install them.
Be particularly careful while unpacking the device and installing its components so as not to cause any damages to the platform mechanism. Do it in accordance with the description below.

Upon completing mechanical installation, carry out electrical connections. Depending on the preferred communication type, connect communication cables to the appropriate connectors (for connectors description refer to section 1.2 of this user manual). It is recommended to use original communication cables supplied by RADWAG. Nominal voltage of the power supply (specified on the power supply data plate) has to be compatible with the mains nominal voltage.

2.3. HRP 16, 32 Platform

1. Take the platform out of the packaging.

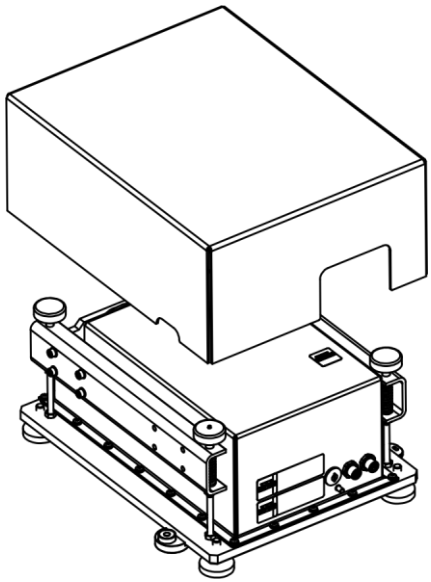

2. Install the weighing pan.
3. Connect the indicator or computer to the weighing module. For detailed description of connectors refer to section 1.2. of this user manual.
4. Place the platform at the place of use on a flat and even surface. Keep it far away from any sources of heat.
5. Level the device, to do it turn its feet left/right. Keep turning the feet until the air bubble takes central position.

YES	NO

2.4. HRP 62, 120, 150 Platform

1. Take the platform out of the packaging.

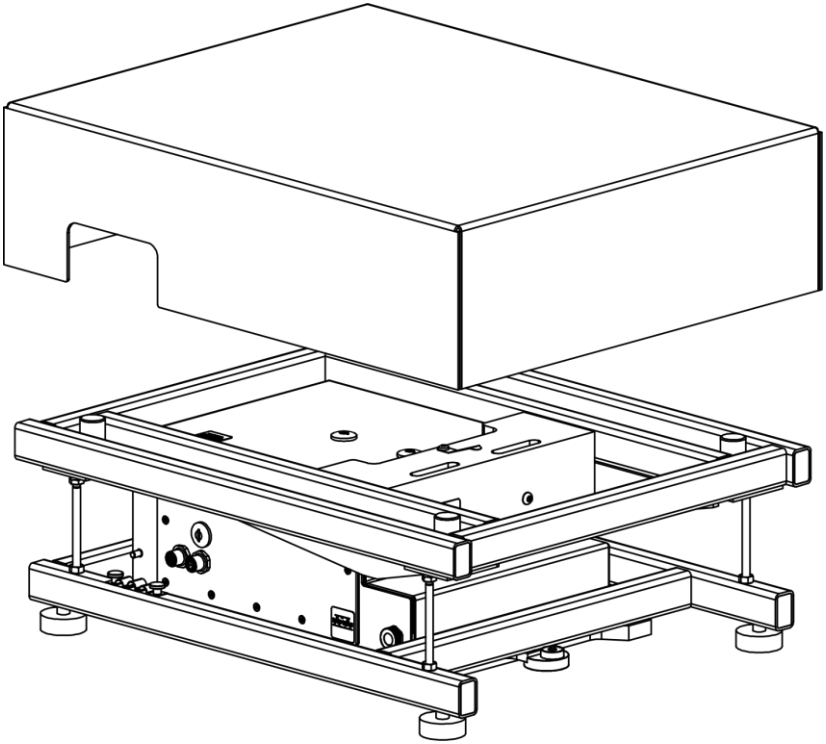

2. Install the weighing pan.
3. Connect the indicator or computer to the weighing module. For detailed description of connectors refer to section 1.2. of this user manual.
4. Place the platform at the place of use on a flat and even surface. Keep it far away from any sources of heat.
5. Level the device, to do it turn its feet left/right. Keep turning the feet until the air bubble takes central position.

YES	NO

2.5. HRP 150, 300 Platform

1. Take the platform out of the packaging, make sure that you touch 'OUTER FRAME' only.

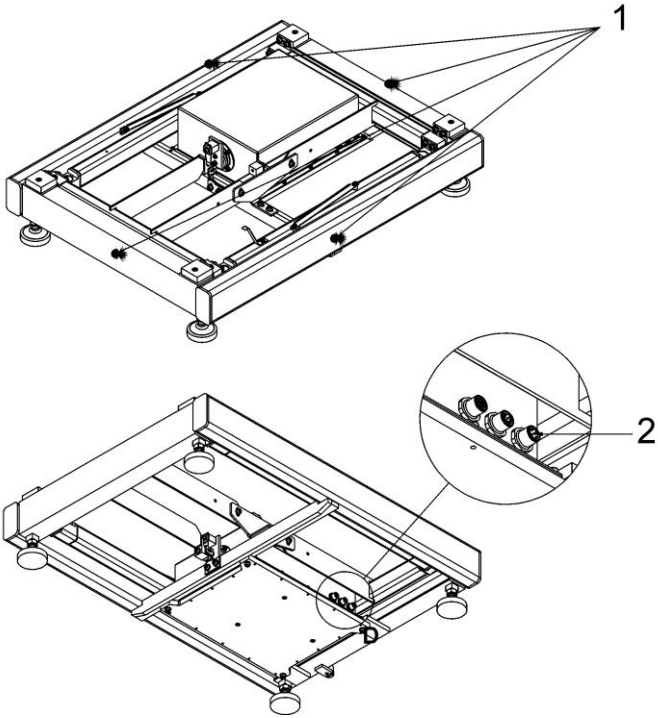

2. Connect the indicator or computer to the weighing module. For detailed description of connectors refer to section 1.2. of this user manual.
3. Install weighing pan receivers, fit them into lever seats.

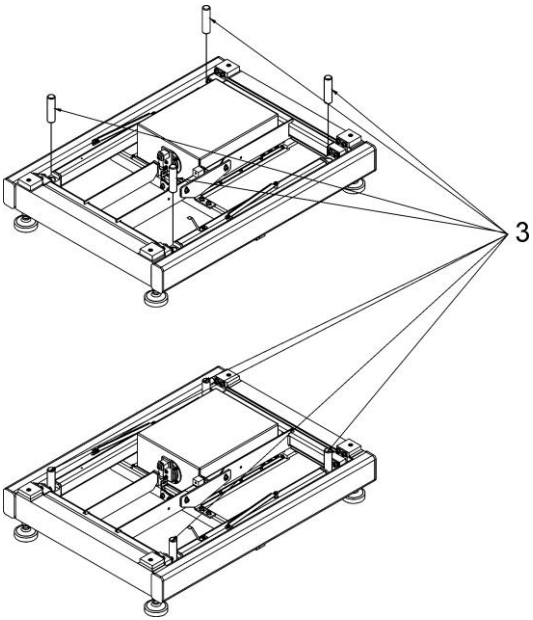

4. Disassemble transport lock by undoing screws and removing fixing washers.

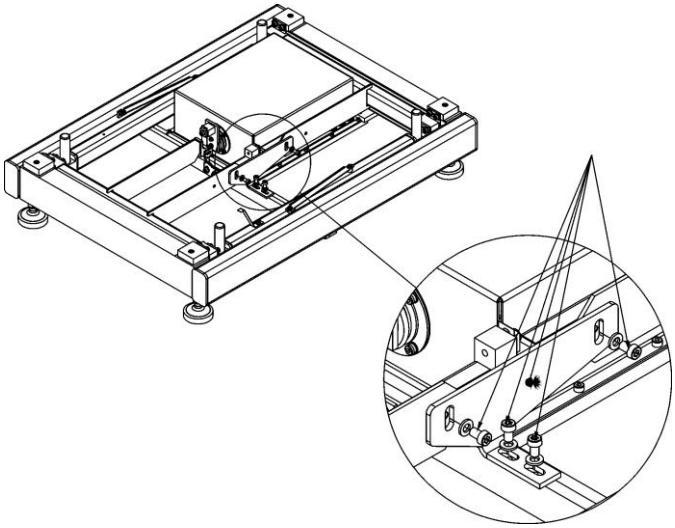

5. Place the device on a flat and even surface. Keep it far away from any sources of heat (do not assemble the weighing pan).

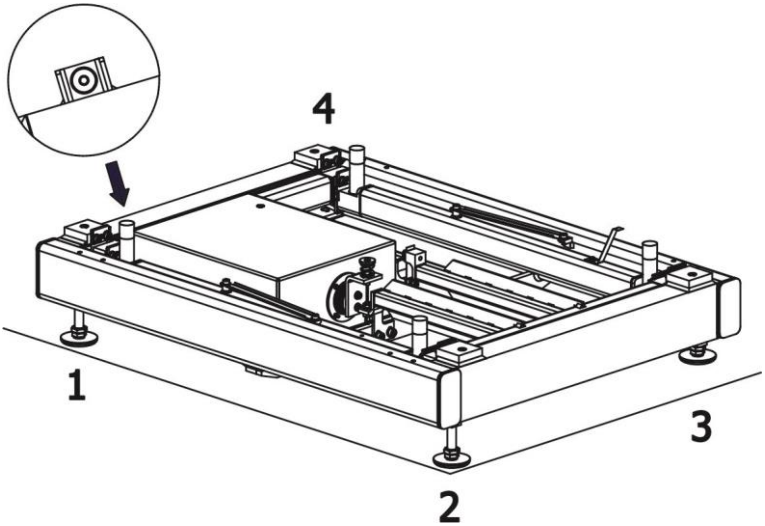

6. Screw foot no. 3 so that feet no. 1, 2, 4 form a plain surface on which platform frame is based.
7. Level the platform using feet no. 1, 2 and 4 until the air bubble takes central position.

YES	NO

8. Unscrew foot no. 3 so that it rests on the ground. Do not exert stress on platform frame. Do not change the level of the platform (the air bubble has to remain in central position).
9. Install the weighing pan (5).

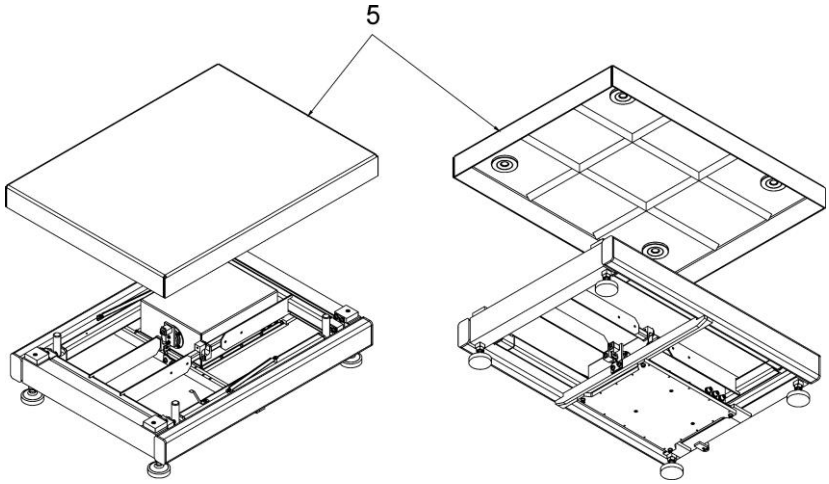

10. Connect the scale to the power supply.

2.6. HRP 300.1, 600, 1100 Platform

Take the platform out of the packaging, make sure that you touch 'OUTER FRAME' only.

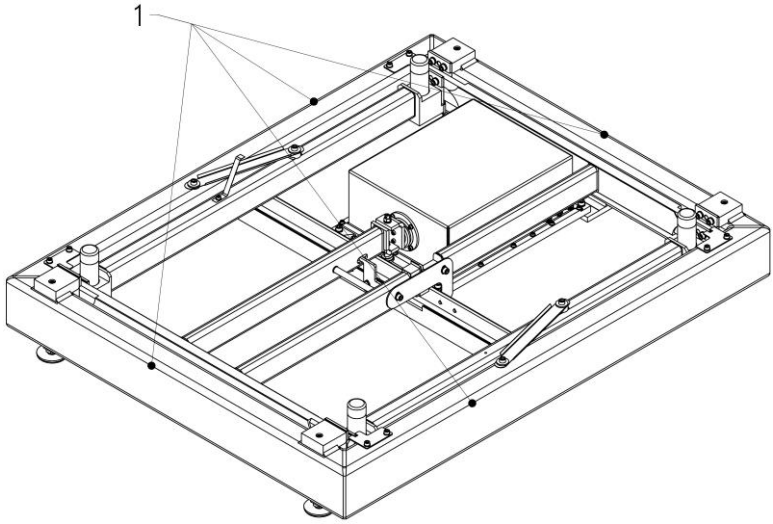

Connect the indicator or computer to the weighing module. For detailed description of connectors refer to section 1.2. of this user manual.

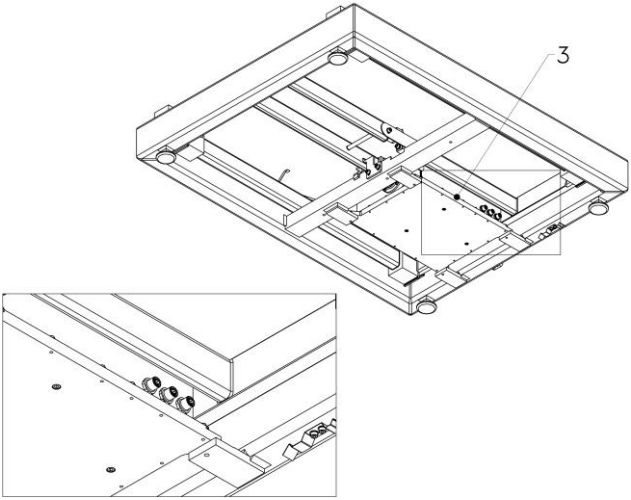

Install weighing pan receivers (4), fit them into lever seats(5).

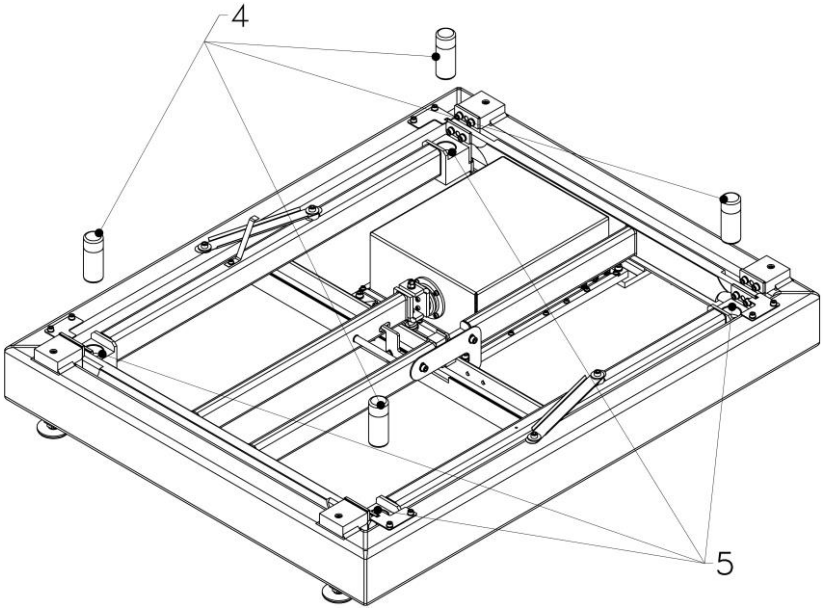

Disassemble transport lock by undoing screws and removing fixing washers (6).

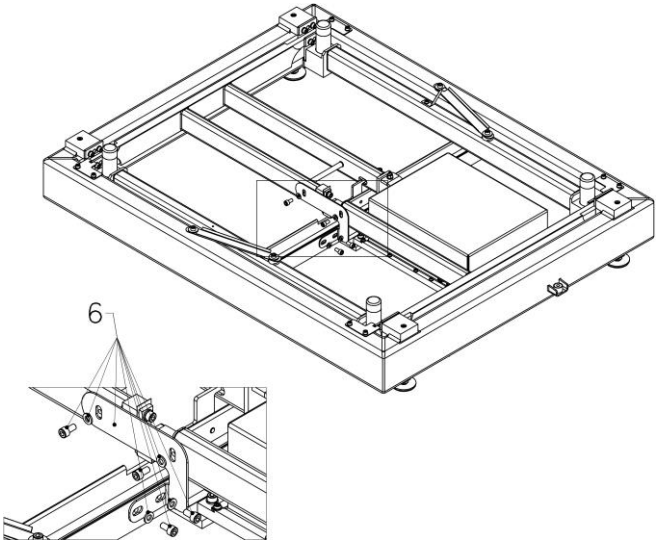

Place the device on a flat and even surface. Keep it far away from any sources of heat (do not assemble the weighing pan).

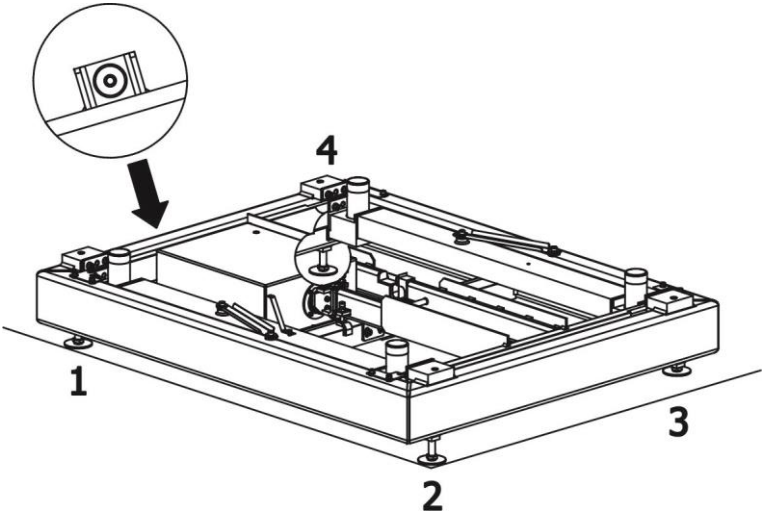

Screw foot no. 3 so that feet no. 1, 2, 4 form a plain surface on which platform frame is based.

Level the platform using feet no. 1, 2 and 4 until the air bubble takes central position.

YES	NO

Unscrew foot no. 3 so that it rests on the ground. Do not exert stress on platform frame. Do not change the level of the platform (the air bubble has to remain in central position).
Install the weighing pan (7).

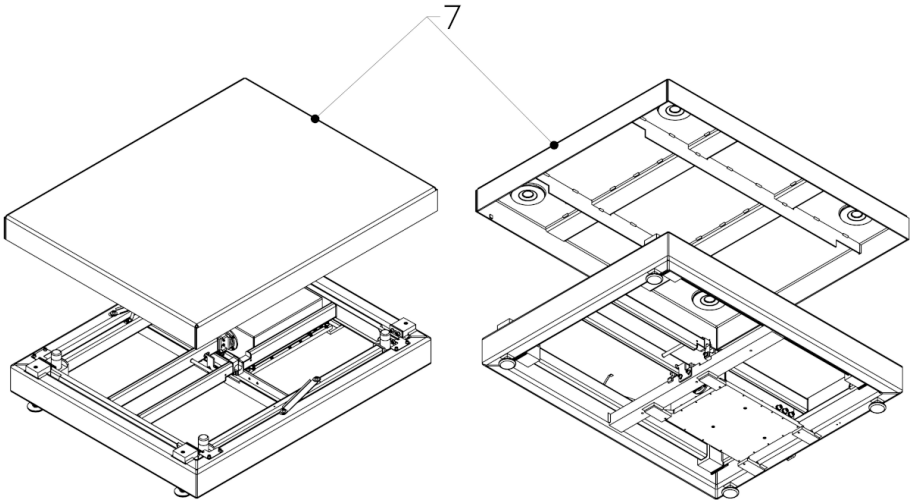

Connect the scale to the power supply.

2.7. HRP 2000 Platform

1. Take the platform out of the packaging using hoist. Procedure:
   - Unscrew 4 screws presented in the figure below.

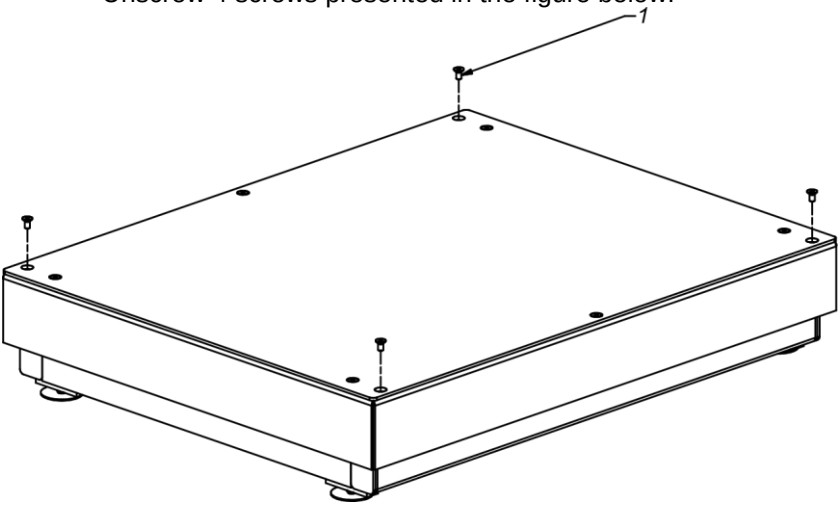

   - Screw 4 screws with eyelets. Using cords and hoist take the platform out of the packaging and place in the place of use on a flat and even surface. Keep it far away from any sources of heat.

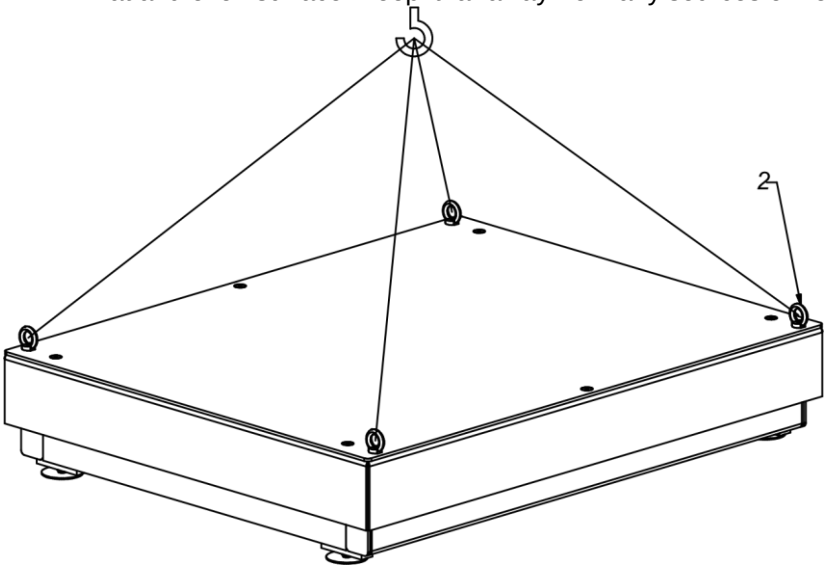

   - Upon locating the platform in the place of use, unscrew the screws with eyelets.

2. Disassemble the top of the weighing platform (3).

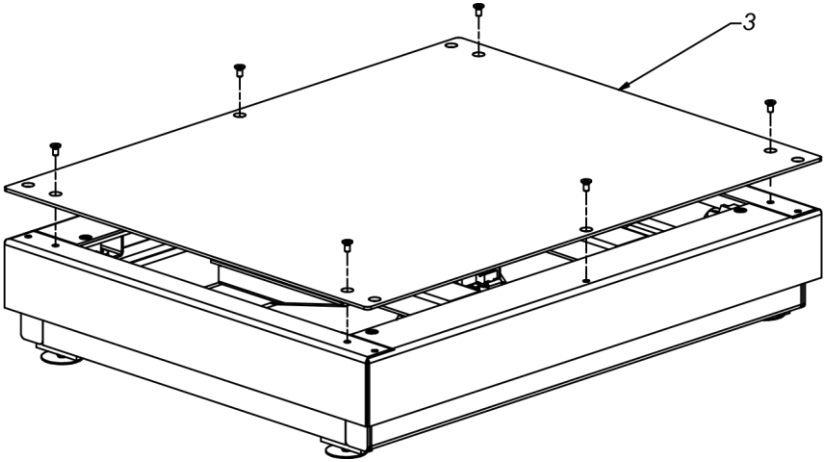

3. Connect the indicator or computer to the weighing module. For detailed description of connectors refer to section 1.2. of this user manual.

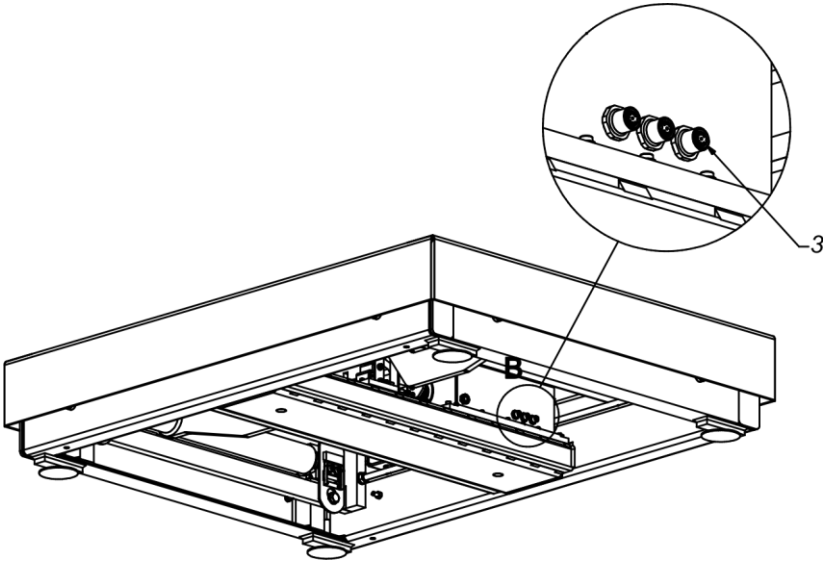

4. Screw in the screw so that there is a gap of approx. 5 mm between the screw and the lever (6).

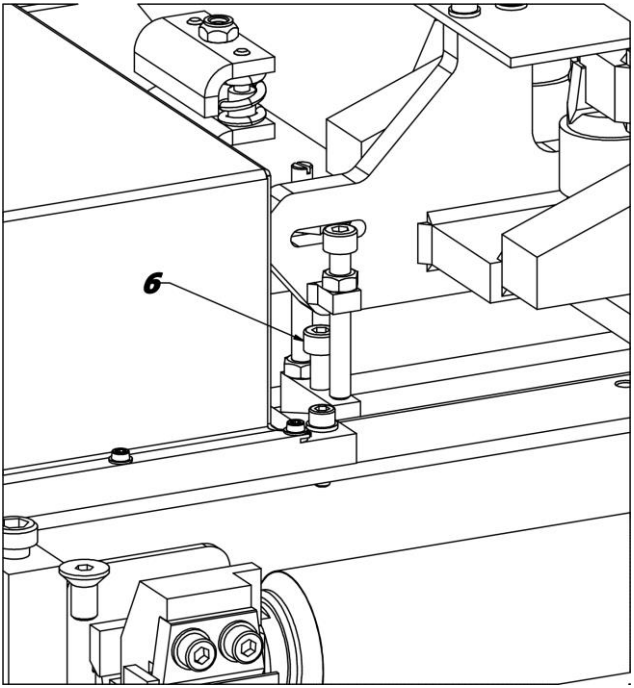

5. Set the bumpers. Loosen the nuts in all four corners. Unscrew the screws and set 1 mm gap. Tighten the nuts.

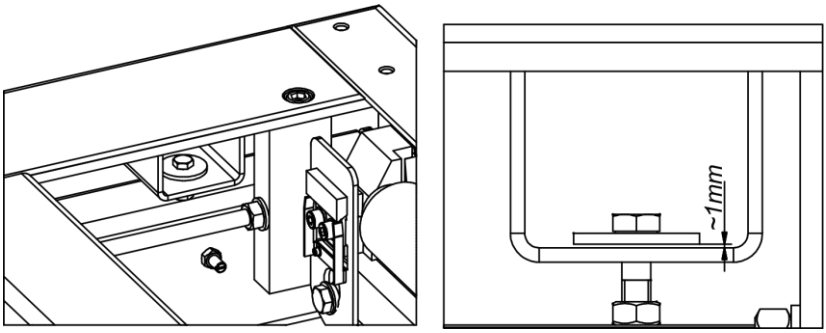

6. Place the device on a flat and even surface. Keep it far away from any sources of heat (do not assemble the weighing pan).

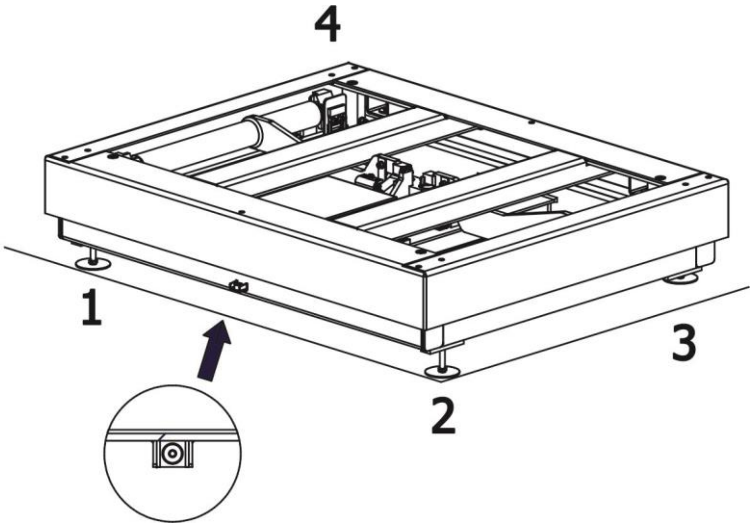

7. Screw foot no. 3 so that feet no. 1, 2, 4 form a plain surface on which platform frame is based.
8. Level the platform using feet no. 1, 2 and 4 until the air bubble takes central position.

YES	NO

9. Unscrew foot no. 3 so that it rests on the ground. Do not exert stress on platform frame. Do not change the level of the platform (the air bubble has to remain in central position).
10. Install the weighing pan (3).

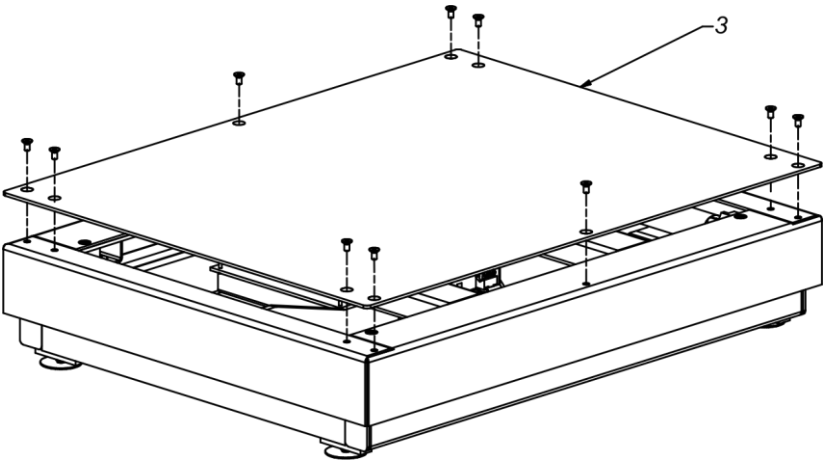

11. Connect the scale to the power supply.

3. ADJUSTMENT

In order to ensure the highest weighing accuracy, it is recommended to periodically correct indications by entering a corrective factor to module memory, the said factor must be referred to a mass standard. Adjustment has to be carried out before weighing process, after a long break between measurements series or when ambient temperature changes rapidly. The adjustment has to be carried out for unloaded weighing pan and stable working conditions (no drafts or vibrations). An error message is displayed when one of the above conditions is not fulfilled. In such case, unload the weighing pan or eliminate other distorting factors and repeat the adjustment. Do not use the module until the adjustment is carried out. Follow the displayed messages. HRP platforms are equipped with an internal weight, the adjustment can be carried out using either this weight or an external one.

There are three types of adjustment process:

- adjustment using external weight
- automatic internal adjustment initiated by the balance (at a specified time interval and in the case of an ambient temperature change)
- internal adjustment initiated by an operator

The adjustment procedure using external weight can be carried out using:

- MWMH-Manager - program for platforms and modules operation
- weighing indicator connected to the module

Internal adjustment can be initiated using:

- MWMH-Manager - program for platforms and modules operation
- weighing indicator connected to the module
- **IC** command of the communication protocol
- command of the Profibus protocol
- command of the Modbus protocol

CAUTION

Sent frame contains information whether adjustment should be carried out for the module (see commands overview).

Verified HRP platforms cannot be adjusted using external weight.

3.1. Operator Start Mass

You can determine zero point of HRP platforms. Option can be set using:

- MWMH-Manager - program for platforms and modules operation
- weighing indicator connected to the module

CAUTION

Determination of start mass carried out by an operator is not available for verified platforms.

4. COMMUNICATION PROTOCOL

4.1. Communication with Module

HRP Platforms can communicate with RADWAG-manufactured weighing indicators, computer applications and industrial controllers via RS232, Ethernet and, optionally, via RS485 and Profibus connectors.
Communication protocols of the modules:

- Radwag communication protocol
- Modbus RTU (RS485)
- Modbus TCP (Ethernet)
- Profibus

Modbus - Profibus communication has been described in a separate user manual.
In addition, the platform can be equipped with digital inputs and outputs which enable taring, zeroing, dosing start and stop, threshold signalling and dosing process controlling.

Caution:
HRP platforms with Profibus are not equipped with digital IN/OUT, RS485 and Ethernet.

4.2. Default Communication Parameters

- RS 232

Baud rate	57600
Data bits	8
Parity	none
Stop bits	1

- RS 485

Baud rate	57600
Data bits	8
Parity	none
Stop bits	1
Module address	1

- TCP/IP

IP address	192.168.0.2
Subnet mask	255.255.255.0
Default gateway	192.158.0.1
Port	4001

4.3. HRP Configuration Using MWMH-Manager

„MWMH-Manager” is a computer software operating in MS Windows environment, intended for operation and configuration of parameters of HRP platforms and MWSH, MWMH, MWLH magnetoelectric weighing modules. The program facilitates the following: mass readout, taring, zeroing, setting filters, adjustment, setting communication parameters, simulation of digital inputs and outputs operation.
„MWMH-Manager” software enables communication with peripheral devices using RS232, RS485 and Ethernet. **MWMH-Manager** software has been described in a separate user manual.

4.3.1. Alibi Memory - Weighings Database

The module is equipped with ALIBI memory that enables saving and storing up to 131 071 carried out measurements.
Measurements are saved automatically upon each sending of the <SS> command. There is no need for any additional operations or changing settings.
The following data related with the measurements is saved:

- Entry number in the database.
- Result (mass).
- Measurement date.
- Measurement time.
- Tare value.

The software saves the measurement in a so called loop, i.e. when the measurement no. 131 072 is saved, the measurement 1 gets automatically deleted from the module memory.

Measurements saved to balance memory cannot be deleted.

You can preview and print out the data saved to the ALIBI database.

Caution: Remember to download data from the alibi memory. The frequency of weighings results downloading has to be selected in a way preventing from losing the first measurements. For detailed information regarding downloading procedure read MWMH- Manager user manual.

4.4. Cooperation with Weighing Indicators

HRP platforms are compatible with the following indicators: HY 10, PUE 5, PUE 7.1 and PUE 10. Communication between the devices is established via RS232, RS485 and Ethernet connectors. Combination of the HRP platform and indicator results in high resolution weighing instrument with applications intended for industry. Weighing indicator enables full access to module parameters and allows carrying out adjustment procedure.

PUE HY10 Indicator

PUE 5 Indicator

PUE 7.1 Indicator

PUE 10 Indicator

4.5. Cooperation with R-LAB Program

R-LAB program is a computer application that enables mass value readout carried out on connected modules, measurements collection, taring and zeroing.
The program enables connection with the HRP platform via RS232 and Ethernet connectors.

4.6. Radwag Communication Protocol

General information

- A character-based communication protocol (platform-indicator, computer) is designed for establishing communication between a

RADWAG weighing instrument and a peripheral device via RS-232C, RS 484 or Ethernet interface.

- The protocol consists of commands sent from a peripheral device to the platform and responses from the weighing device.
- Responses are sent from the platform each time a command is received.
- Commands, forming the communication protocol, enable obtaining data on platform status and facilitate influencing weighing instrument operation, e.g.: acquiring measurement results from the platform, zeroing, etc.

Command	**Command overview**
Z	Zeroing
T	Taring
OT	Give tare value
UT	Set tare
S	Send stable measurement result in basic measuring unit
SI	Immediately send measurement result in basic measuring unit
SU	Send stable measurement result in current measuring unit
SUI	Immediately send measurement result in current measuring unit
SS	Send and save measurement result in correct measuring unit to alibi memory
C1	Switch on continuous transmission in basic measuring unit
C0	Switch off continuous transmission in basic measuring unit
CU1	Switch on continuous transmission in current measuring unit
CU0	Switch off continuous transmission in current measuring unit
DH	Set min checkweighing threshold
UH	Set max checkweighing threshold
ODH	Give value of min checkweighing threshold
OUH	Give value of max checkweighing threshold
NB	Give balance serial number

UI	Give accessible units
US	Set unit
UG	Give current unit
BN	Give balance type
FS	Give max capacity
RV	Give program version
A	Set AUTOZERO
PC	Send all implemented commands
FIS	Set filter
GIN	Give status of inputs settings
GOUT	Give status of outputs settings
SOUT	Set outputs
IC	Internal adjustment
PS	Send module settings

Caution**:** *Each command must end with CR LF characters.*

Response format:

XX_A CR LF	command understood and in progress
XX_D CR LF	command carried out (appears only after the XX_A command)
XX_I CR LF	command understood but not accessible at this moment
XX _ ^ CR LF	command understood but max threshold is exceeded
XX _ v CR LF	command understood but min threshold is exceeded
XX _ OK CR LF	command carried out
ES_CR LF	command not recognised
XX _ E CR LF	time limit exceeded while waiting for stable measurement result (time limit is a characteristic module parameter)

XX - name of a sent command
_ - space

4.7. Commands Overview

Zeroing

Format: **Z CR LF**

Response options:

Z_A CR LF	- command understood and in progress
Z_D CR LF	- command carried out
Z_A CR LF	- command understood and in progress
Z_^ CR LF	- command understood but zeroing range is exceeded
Z_A CR LF	- command understood and in progress
Z_E CR LF	- time limit exceeded while waiting for stable measurement result
Z_I CR LF	- command understood but not accessible at this moment

Taring

Format: **T CR LF**

Response options:

T_A CR LF	- command understood and in progress
T_D CR LF	- command carried out
T_A CR LF	- command understood and in progress
T_v CR LF	- command understood but taring range is exceeded
T_A CR LF	- command understood and in progress
T_E CR LF	- time limit exceeded while waiting for stable measurement result
T_I CR LF	- command understood but not accessible at this moment

Give tare value

Format: **OT CR LF**

Response: **OT_TARE CR LF** - command carried out

Response format:

1	2	3	4-12	13	14	15	16	17	18	19
O	T	space	tare	space	unit			space	CR	LF

Tare - 9 characters, right justification

Unit - 3 characters, left justification

Caution: *Tare value is always given in adjustment unit.*

Set tare

Format: **UT_TARE CR LF**, where **TARE** - tare value

Response options:

UT_OK CR LF - command carried out

UT_I CR LF - command understood but not accessible at this moment

ES CR LF - command not recognised (tare format incorrect)

Caution: *Use dot in tare format as decimal point.*

Send stable measurement result in basic measuring unit

Format: **S CR LF**

Response options:

S_A CR LF - command understood and in progress

S_E CR LF - time limit exceeded while waiting for stable measurement result

S_I CR LF - command understood but not accessible at this moment

MASS FRAME - command carried out, immediate response: mass value in basic measuring unit

Response format:

1	2-3	4	5	6	7-15	16	17	18	19	20	21
S	space	stability marker	marker determining whether internal adjustment should be carried out	character	mass	space	unit			CR	LF

S	–	command
Stability marker	–	[space] if stable, [?] if unstable
Marker determining whether internal adjustment should be carried out	–	[space] if the result is a positive value, [1] if the result is a negative value,
Character	–	[space] if the result is a positive value, [-] if the result is a negative value
Mass	–	9 characters of net weight in adjustment unit, right justification
Mass unit	–	3 characters, left justification

Example:

S CR LF - command sent from a computer

S _ A CR LF - command understood and in progress

S _ _ _ 1 _ _ _ _ _ _ -8 . 5 _ g _ _ CR LF - command carried out, response: mass value in basic measuring unit

where: _ - space

Immediately send measurement result in basic measuring unit

Format: **SI CR LF**

Response options:

SI_I CR LF - command understood but not accessible at this moment

MASS FRAME - command carried out, immediate response: mass value in basic measuring unit

Response format:

1	2	3	4	5	6	7-15	16	17	18	19	20	21
S	I	space	stability marker	Marker determining whether internal adjustment should be carried out	character	mass	space	unit			CR	LF

SI	–	command
Stability marker	–	[space] if stable, [?] if unstable
Marker determining whether internal adjustment should be carried out	–	[space] if the result is a positive value, [1] if the result is a negative value,
Character	–	[space] if the result is a positive value, [-] if the result is a negative value
Mass	–	9 characters of net weight in adjustment unit, right justification
Mass unit	–	3 characters, left justification

Example:

S I CR LF - command sent from a computer

S I _ ? _ _ _ _ _ _ _ 1 8 . 5 _ k g _ CR LF - command carried out, immediate response: mass value in basic measuring unit

where: _ - space

Send stable measurement result in current measuring unit

Format: **SU CR LF**

Response options:

SU_A CR LF	- command understood and in progress
SU_E CR LF	- time limit exceeded while waiting for stable measurement result
SU_I CR LF	- command understood but not accessible at this moment
MASS FRAME	- command carried out, immediate response: mass value in basic measuring unit

Response format:

1	2	3	4	5	6	7-15	16	17	18	19	20	21
S	U	space	stability marker	Marker determining whether internal adjustment should be carried out	Character	Mass	space	unit			CR	LF

SU	–	command
Stability marker	–	[space] if stable, [?] if unstable
Marker determining whether internal adjustment should be carried out	–	[space] if the result is a positive value, [1] if the result is a negative value,
Character	–	[space] if the result is a positive value, [-] if the result is a negative value
Mass	–	9 characters of net weight in current unit, right justification
Mass unit	–	3 characters, left justification

Example:

S U CR LF	- command sent from a computer
S U _ A CR LF	- command understood and in progress
S U _ _ _ - _ _ 1 7 2 . 1 3 5 _ N _ _ CR LF	- command carried out, immediate response: mass value in current measuring unit

where: _ - space

Immediately send measurement result in current measuring unit

Format: **SUI CR LF**

Response options:

SUI_I CR LF - command understood but not accessible at this moment

MASS FRAME - immediate response: mass value in basic measuring unit

Response format:

1	2	3	4	5	6	7-15	16	17	18	19	20	21
S	U	I	stability marker	Marker determining whether internal adjustment should be carried out	Character	Mass	space	unit			CR	LF

SUI	–	command
Stability marker	–	[space] if stable, [?] if unstable
Marker determining whether internal adjustment should be carried out	–	[space] if the result is a positive value, [1] if the result is a negative value,
Character	–	[space] if the result is a positive value, [-] if the result is a negative value
Mass	–	9 characters of net weight in current unit, right justification
Mass unit	–	3 characters, left justification

Example:

S U I CR LF - command sent from a computer

S U I ? _ - _ _ _ 5 8 . 2 3 7 _ k g _ CR LF - command carried out, immediate response: mass value in basic measuring unit

where: _ - space

Send and save measurement result in correct measuring unit to alibi memory

Caution: For verified weighing instruments only stable weighing result is recorded.

Format: **SS CR LF**

Response options:

SS_OK CR LF - command carried out

SS_E CR LF - time limit exceeded while waiting for stable measurement result

SS_I CR LF - command understood but not accessible at this moment

Switch on continuous transmission in basic measuring unit

Format: **C1 CR LF**

Response options:

C1_I CR LF - command understood but not accessible at this moment

C1_A CR LF - command understood and in progress

MASS FRAME - command carried out, immediate response: mass value in basic measuring unit

Response format:

1	2	3	4	5	6	7-15	16	17	18	19	20	21
S	I	space	stability marker	space	Character	Mass	space	unit			CR	LF

Switch off continuous transmission in basic measuring unit

Format: **C0 CR LF**

Response options:

C0_I CR LF - command understood but not accessible at this moment

C0_A CR LF - command understood and carried out

Switch on continuous transmission in current measuring unit

Format: **CU1 CR LF**

Response options:

CU1_I CR LF - command understood but not accessible at this moment

CU1_A CR LF - command understood and in progress

MASS FRAME - response: mass value in current measuring unit

Response format:

1	2	3	4	5	6	7-15	16	17	18	19	20	21
S	U	I	stability marker	space	Character	Mass	space	unit			CR	LF

Switch off continuous transmission in current measuring unit

Format: **CU0 CR LF**

Response options:

CU0_I CR LF - command understood but not accessible at this moment

CU0_A CR LF - command understood and carried out

Set min checkweighing threshold

Format: **DH_XXXXX CR LF**, where: _ - space**, XXXXX** - mass format

Response options:

DH_OK CR LF - command carried out

ES CR LF - command not recognised (mass format incorrect)

Set max checkweighing threshold

Format: **UH_XXXXX CR LF**, where: _ - space**, XXXXX** - mass format

Response options:

UH_OK CR LF - command carried out

ES CR LF - command not recognised (mass format incorrect)

Give value of min checkweighing threshold

Format: **ODH CR LF**

Response: **DH_MASA CR LF** - command carried out

Response format:

1	2	3	4-12	13	14	15	16	17	18	19
D	H	space	Mass	space	unit			space	CR	LF

Mass - 9 characters, right justification

Unit - 3 characters, left justification

Give value of max checkweighing threshold

Format: **OUH CR LF**

Response: **UH_MASA CR LF** - command carried out

Response format:

1	2	3	4-12	13	14	15	16	17	18	19
U	H	space	Mass	space	unit			space	CR	LF

Mass - 9 characters, right justification

Unit - 3 characters, left justification

Give scale serial number

Format: **NB CR LF**

Response options:

NB_A_"Nr fabryczny" CR LF - command understood, response: serial number

NB_I CR LF - command understood but not accessible at this moment

"Serial No." – serial number of the device, Inserted in between inverted commas.

Example:

NB CR LF - command sent from a computer

NB_A_"123456" CR LF - scale serial number – 123456

Give accessible units

Format: **UI CR LF**

Response options:

UI_"x_1,x_2, … x_n"_OK<CR><LF> - command carried out, response: accessible units

UI_I <CR><LF> - command understood but not accessible at this moment

x - unit symbol, separated by means of commas

Example:

UI CR LF - give available units

UI_"kg,N,lb,u1,u2"_OK CR LF - response: available units

Set current unit

Format: **US_x CR LF**

Response options:

US_ x_OK CR LF - command carried out, response: set unit

US_E CR LF - error in-course of command execution, no parameter or incorrect format

US_I CR LF - command understood but not accessible at this moment

x - parameter, units symbols: g, kg, N, lb, oz, ct, u1, u2, next

Caution:

*If **x=next** the command swaps to another available unit on the list (it simulates key pressing.*

Example:

US_kg CR LF - set „kg” unit

US_kg_OK CR LF - „kg” set as a current unit

Give current unit

Format: **UG CR LF**

Response options:

UG_x_OK<CR><LF> - command carried out, response: set unit

UG_I <CR><LF> - command understood but not accessible at this moment

x - parameter, units symbols

Example:

UG CR LF - give current unit

UG_kg_OK CR LF - currently set unit is „kg”

Give module type

Format: **BN CR LF**

Response options:

BN_A_”x” CR LF - command understood, response: weighing device type

BN_I CR LF - command understood but not accessible at this moment

x - weighing device type (inserted in between inverted commas)

Example:

BN CR LF - give weighing device type

BN_A_”C32” CR LF - weighing device type: „C32”

Give max capacity

Format: **FS CR LF**

Response options:

FS_A_”x” CR LF - command understood, response: max capacity

FS_I CR LF - command understood but not accessible at this moment

x - Max capacity value (in between inverted commas)

Example:

FS CR LF	- give Max capacity
FS_A_”3.000” CR LF	- Max capacity: „3.000”

Give program version

Format: **RV CR LF**

Response options:

RV_A_”x” CR LF	- command understood, response: program version
RV_I CR LF	- command understood but not accessible at this moment

x - program version (in between inverted commas)

Example:

RV CR LF	- give program version
RV_A_”1.0.0” CR LF	- response program version „1.0.0”

Set autozero

Format: **A_n CR LF**

Response options:

A_OK CR LF	- command carried out
A_E CR LF	- error in-course of command execution, no parameter or incorrect format
A_I CR LF	- command understood but not accessible at this moment

n - parameter, decimal value determining autozero settings:
0 – autozero off,
1 – autozero on.

Example:

A_1 CR LF	- turn autozero function on
A_OK CR LF	- autozero function is on

Send all implemented commands

Format: **PC CR LF**

Response:

PC_A_"Z,T,S,SI,SU,SUI…"	- command carried out, all implemented commands have been sent

Set filter

Format: **FIS_n <CR><LF>**

Response options:

FIS_OK <CR><LF>	- command carried out
FIS_E <CR><LF>	- error in-course of command execution, no parameter or incorrect format
FIS_I <CR><LF>	- command understood but not accessible at this moment

n - parameter, decimal value determining filter number

n → 1 – very fast
2 – fast
3 – average
4 – slow
5 – very slow

Caution:
The numbering is assigned to a particular filter name and it is identical for all balance types.
The command changes settings for a current working mode if, for a particular balance type, filter settings are assigned to the working mode.

Example:

Command:	FIS_3<CR><LF>	- set average filter
Response:	FIS_OK<CR><LF>	- average filter set

Give status of inputs settings

Format: **GIN CR LF**

Response: **GIN_XXXXX CR LF**

where **XXXXX** - status of inputs settings starting from input 5 and ending with input 1
0- input not set 1- input set

Response format:

1	2	3	4	5-9	10	11
G	I	N	space	inputs status	CR	LF

Inputs status - 5 characters signalling inputs status: character No. 5 input 5 …character No. 9 input 1

Give status of outputs settings

Format: **GOUT CR LF**

Response: **GOUT_XXXX CR LF**

where **XXXX** - status of outputs settings starting from output 4 and ending with output 1
0- output not set 1- output set

Response format:

1	2	3	4	5	6-9	10	11
G	O	U	T	space	outputs status	CR	LF

Inputs status - 4 characters signalling outputs status: character No. 6 output 4 …character No. 9 input 1

Set outputs

Format: **SOUT_XXXX CR LF**, where: _ - space**, XXXXX** – outputs status setting active-1 or not active-0 starting from output No.4 to output No. 1.

Response options:

SOUT_OK CR LF - command carried out

ES CR LF - command not recognised (incorrect outputs mask format)

Internal adjustment

Format: **IC CR LF**

Response options:

IC_A CR LF - command understood and in progress

IC_D CR LF - adjustment completed

IC_A CR LF - command understood and in progress

IC_E CR LF - time limit exceeded while waiting for stable measurement result

IC_I CR LF - command understood but not accessible at this moment

Send module settings

Format: **PS <CR><LF>**

Response options:

Example:

Command: PS<CR><LF> - send module settings

Response: PS_A<CR><LF>
…
PS_D<CR><LF> - scale settings

4.8. Error Messages

-Err2-	Value beyond zero range
-Err3-	Value beyond tare range
-Err8-	Zeroing/taring operation time exceeded
NULL-	Zero value from converter
-FULL-	Measuring range (Max. capacity) exceeded
-LH-	Start mass error

4.9. Communication and Power Supply Cables

HRP-computer RS232 cable

PT0348

RS485 HRP cable

PT0375

RS232 HRP-HY10,PUE 5 cable + power supply

PT0347

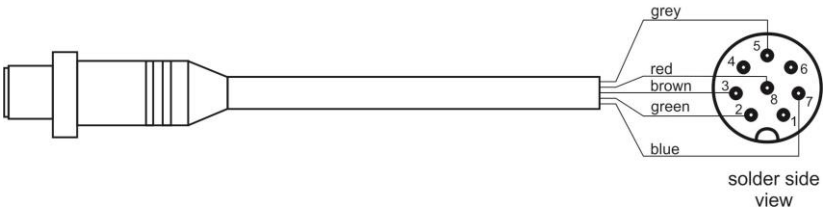

Ethernet HRP-HY10, PUE 5 cables

PT0302

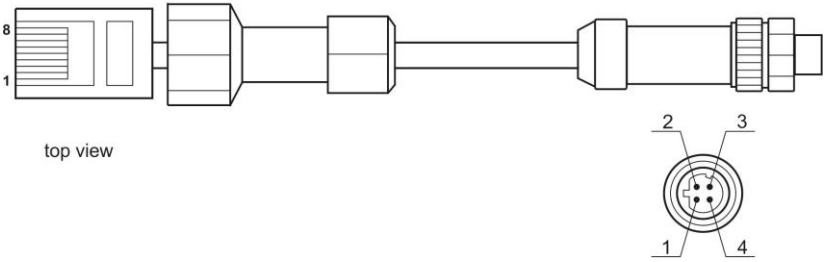

solder side
view

pin1 : white-green
pin2 : white-orange
pin3 : green
pin4 : orange

PT0303

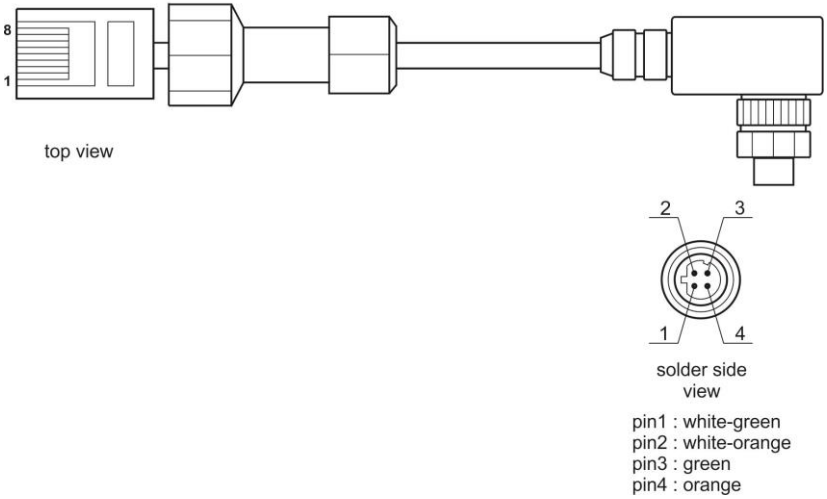

Ethernet HRP- Ethernet Switch, PUE 7.1 cable

P0198

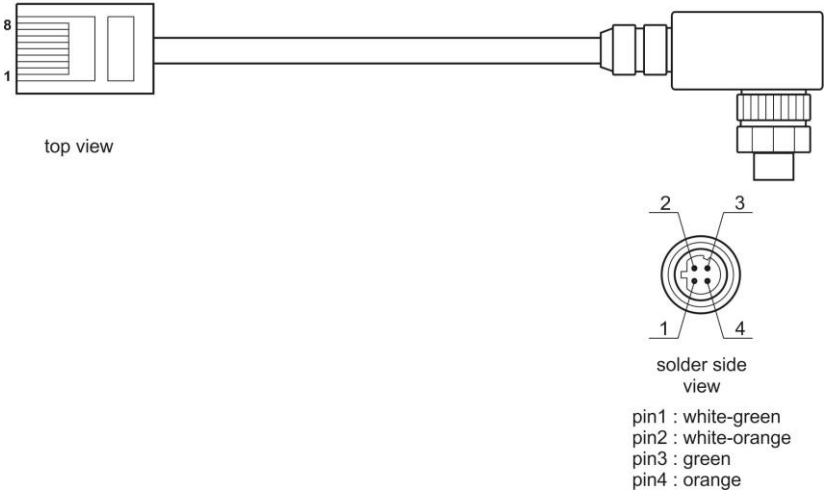

HRP IN/OUT cable

PT0256

IN/OUT - HRP, MWSH, MWLH cable

Caution:

Colours of wires for cable of M12 standard. The figure presents exemplary cable type.

4.10. Platform Power Supply

To supply HRP platform use SYS-1544-2415-T3-HRP power supply that is included in the set with the module. In case of communication via PT0348 or PT0375 cables, the power supply has to be plugged to the connector that terminates the cable. In case of communication via Ethernet or Profibus, the power supply has to be plugged directly to the connector No. 3.

SYS-1544-2415-T3-HRP

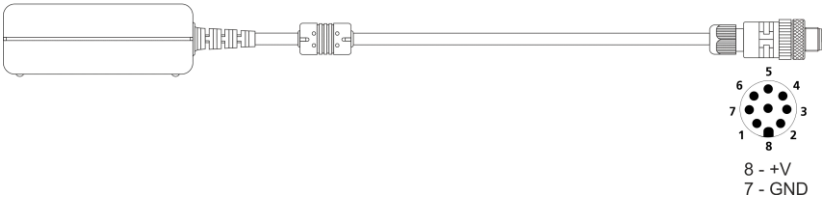

5. TRANSPORT AND STORAGE

5.8. Delivery Check

Upon delivery it is necessary to check the package and the device make sure that your package bears no signs of damage.

5.9. Packaging

Keep all package elements should your device be transported in the future.
Remember that only original packaging can be used for shipping purposes. Prior packing, uncouple any cables, remove any separable components (weighing pan, shields, inserts). The device components shall be packed into an original packaging, thus being protected against potential damage during transportation.