DOCUMENT

HPT System-3.9

MadgeTech

Distributed by AKRIBIS

ThermaLock
Dimensional Drawing

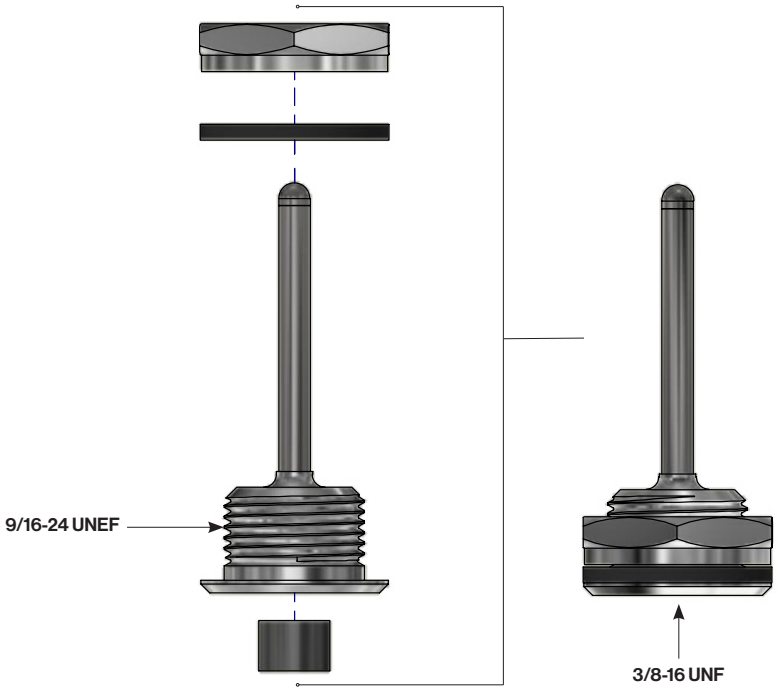

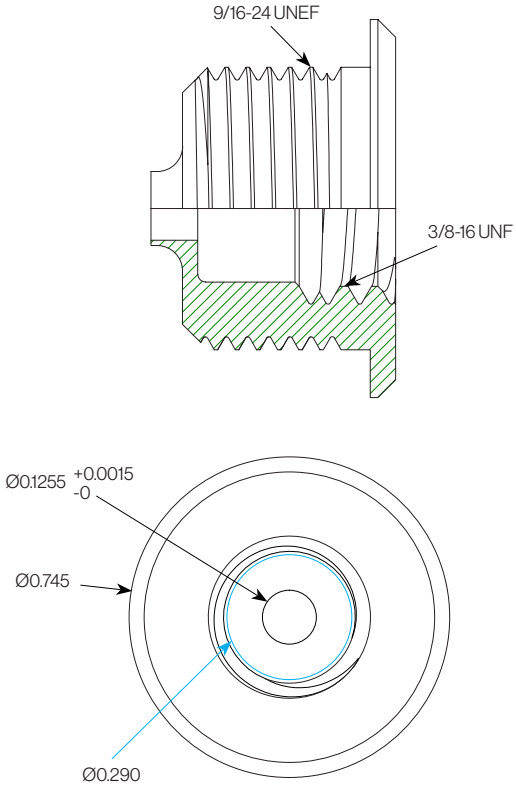

Product Name	Part Number	Description	Length
ThermaLock-1.1	902122-00	1.1” Thermowell for HiTemp140-CF	1.1
ThermaLock-1.2	902102-00	1.2” Thermowell for HiTemp140-CF	1.2
ThermaLock-1.3	902123-00	1.3” Thermowell for HiTemp140-CF	1.3
ThermaLock-1.4	902103-00	1.4” Thermowell for HiTemp140-CF	1.4
ThermaLock-1.5	902124-00	1.5” Thermowell for HiTemp140-CF	1.5
ThermaLock-1.6	902104-00	1.6” Thermowell for HiTemp140-CF	1.6
ThermaLock-1.8	902125-00	1.8” Thermowell for HiTemp140-CF	1.8
ThermaLock-2.1	902435-00	2.1” Thermowell for HiTemp140-CF	2.1
ThermaLock-2.2	902127-00	2.2” Thermowell for HiTemp140-CF	2.2
ThermaLock-3.1	902128-00	3.1” Thermowell for HiTemp140-CF	3.1
ThermaLock-3.9	902119-00	3.9” Thermowell for HiTemp140-CF	3.9
ThermaLock-5.4	902446-00	5.4” Thermowell for HiTemp140-CF	5.4