USER GUIDE

HMW90

Vaisala · Authorized Partner

Distributed by AKRIBIS

VAISALA

USER'S GUIDE

Vaisala HUMICAP® Humidity and Temperature Transmitters HMW90 Series

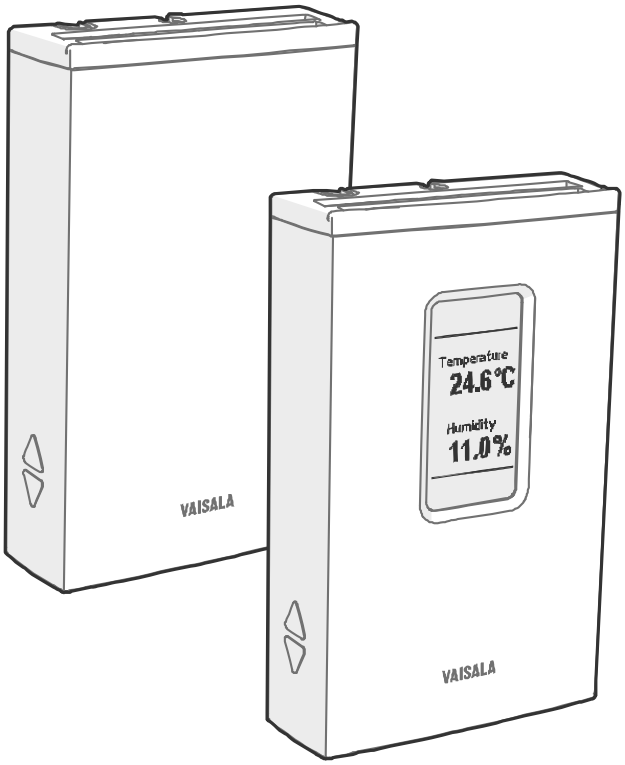

M211399EN-H

AKRIBIS · www.akribis.info · contacto@akribis.info

PUBLISHED BY

Vaisala Oyj
Street address: Vanha Nurmijärventie 21, FI-01670 Vantaa, Finland
Mailing address: P.O. Box 26, FI-00421 Helsinki, Finland
Phone: +358 9 8949 1
Fax: +358 9 8949 2227

Visit our Internet pages at www.vaisala.com.

© Vaisala 2016

No part of this manual may be reproduced, published or publicly displayed in any form or by any means, electronic or mechanical (including photocopying), nor may its contents be modified, translated, adapted, sold or disclosed to a third party without prior written permission of the copyright holder. Translated manuals and translated portions of multilingual documents are based on the original English versions. In ambiguous cases, the English versions are applicable, not the translations.

The contents of this manual are subject to change without prior notice.

Local rules and regulations may vary and they shall take precedence over the information contained in this manual. Vaisala makes no representations on this manual's compliance with the local rules and regulations applicable at any given time, and hereby disclaims any and all responsibilities related thereto.

This manual does not create any legally binding obligations for Vaisala towards customers or end users. All legally binding obligations and agreements are included exclusively in the applicable supply contract or the General Conditions of Sale and General Conditions of Service of Vaisala.

Table of Contents

CHAPTER 1
GENERAL INFORMATION **7**
About This Manual **7**
Contents of This Manual 7
Version Information 8
Related Manuals 8
Documentation Conventions 8
Safety **9**
ESD Protection 9
Recycling **9**
Regulatory Compliances **10**
Trademarks **10**
Software License **10**
Warranty **10**

CHAPTER 2
PRODUCT OVERVIEW **11**
Introduction to HMW90 Series **11**
HMW90 Series Transmitters **12**
Output Parameters Explained **13**
Transmitter Parts **14**
Decorative Cover Option **18**

CHAPTER 3
INSTALLATION **19**
Configuration Before Installation **19**
Configuration of Analog Output Models 19
DIP Switches of Analog Output Models 20
Relay Configuration in DIP Mode 21
Changing Between DIP and Custom Configuration 23
Configuration of Digital Output Models 23
DIP Switches of Digital Output Models 24
Addressing with BACnet Protocol 25
Addressing with Modbus Protocol 25
Selecting Location **26**
Installing the Mounting Base **27**
Wiring **27**
Wiring HMW92 29
Wiring HMW93 30
Wiring TMW92 31
Wiring TMW93 31
Wiring HMW95 32
Connecting Several Transmitters on Same RS-485 Line (HMW95) 32

AKRIBIS · www.akribis.info · contacto@akribis.info

Connecting a Common AC Power Supply to Several Transmitters....33

CHAPTER 4
OPERATION....34
Display....34
Startup Screens....34
Measurement Screen....35
Indicators on the Display....36
Service Port....36
Connecting With an MI70 Indicator....36
Connecting With a Computer....37
Installing the Driver for the USB Service Cable....37
Terminal Application Settings....38
List of Serial Commands....40
Transmitter Information....41
Show Transmitter Information....41
Show Transmitter Firmware Version....41
Show Transmitter Serial Number....41
Show Transmitter Status....42
Show Measured Parameters....44
Show Command Help....44
Show Command List....45
Measurement Settings....45
Set Environmental Parameters....45
Select Units....46
Analog Output Settings....46
Set Analog Output Mode....46
Set Analog Output Scaling....47
Set Output Clipping and Error Limit....48
Display Settings....49
Select Parameters to Display....49
Serial Line Output Commands....50
Start Measurement Output....50
Stop Measurement Output....50
Output a Reading Once....51
Set Output Interval....51
Set Output Format....52
Serial Line Settings....53
Set Remote Echo....53
Set Serial Line Turnaround Delay....54
Relay Configuration in Custom Mode....54
Set Relay Mode....54
Set Relay Parameter and Limits....55
Relay Configuration Examples....56
Calibration and Adjustment Commands....57
Adjust Humidity Measurement....57
Show Current RH Adjustment....57
1-point Adjustment of RH Measurement....58
2-point Adjustment of RH Measurement....58
Clear User Adjustment of RH Measurement....59
Adjust Temperature Measurement....59
Show Current T Adjustment....59
1-point Adjustment of T Measurement....59

AKRIBIS · www.akribis.info · contacto@akribis.info

Clear User Adjustment of T Measurement 60
Enter Calibration and Adjustment Information 60
Testing Commands 61
Test Analog Outputs 61
Test Relay Operation 62
Other Commands 62
Enable Advanced Serial Commands 62
Reset Transmitter 62
Set BACnet Parameters 63

CHAPTER 5
MAINTENANCE 65
Periodic Maintenance 65
Cleaning 65
Calibration and Adjustment 65
Adjustment Using Display and Trimmers 66
Adjustment Using an HM70 67
Adjustment Using a Computer 68
Repair Maintenance 69
Replacing the Measurement Module 69

CHAPTER 6
TROUBLESHOOTING 71
Problem Situations 71
Error Messages 72
Viewing Error Messages on Serial Line 73
View Currently Active Errors 73
View Error Table 73
Error State 74
Reverting to Factory Settings 75
Reverting to Factory Settings Using DIP Switches 75
Reverting to Factory Settings Using Service Port 77
Technical Support 77

CHAPTER 7
TECHNICAL DATA 78
Specifications 78
Spare Parts and Accessories 80
Dimensions in mm 81

APPENDIX A
BACNET REFERENCE 82
BACnet Protocol Implementation Conformance Statement 82
Device Object 85
Relative Humidity Object 87
Calculated Humidity Objects 88
Temperature Object 90
Operation Pressure Object 91
Operation Altitude Object 92

AKRIBIS · www.akribis.info · contacto@akribis.info

BIBBs Supported **93**
Application Services Supported **94**

APPENDIX B
MODBUS REFERENCE **95**

AKRIBIS · www.akribis.info · contacto@akribis.info

List of Figures

Figure 1 HMW90 Series Transmitters 11
Figure 2 Transmitter Parts - Outside 14
Figure 3 Opening the Transmitter..... 15
Figure 4 Transmitter Parts – Inside (Analog Output Models)..... 16
Figure 5 Transmitter Parts – Inside (Digital Output Models) 17
Figure 6 Decorative Cover..... 18
Figure 7 DIP Switch Settings of Analog Output Models 20
Figure 8 Relay High in DIP Mode (HMW93) 22
Figure 9 Relay Low in DIP Mode (HMW93) 22
Figure 10 DIP Switch Settings of Digital Output Models 24
Figure 11 Example of Transmitter Addressing 25
Figure 12 Selecting Transmitter Location..... 26
Figure 13 Installing the Mounting Base 27
Figure 14 Wiring from Behind (Recommended)..... 28
Figure 15 Wiring from Above..... 28
Figure 16 Wiring HMW92 29
Figure 17 Three-Wire Wiring for HMW92..... 29
Figure 18 Wiring HMW93 30
Figure 19 Three-Wire Wiring for HMW93..... 30
Figure 20 Wiring TMW92..... 31
Figure 21 Wiring TMW93..... 31
Figure 22 Three-Wire Wiring for TMW93 31
Figure 23 Wiring HMW95 32
Figure 24 Several Transmitters on Same RS-485 Line..... 32
Figure 25 Connecting a Common AC Power Supply 33
Figure 26 HMW93 Startup Screens..... 34
Figure 27 HMW93 Measurement Screen – Normal Operation 35
Figure 28 HMW93 Measurement Screen – Problem With Measurement 35
Figure 29 PuTTY Terminal Application..... 39
Figure 30 Relay Hi_Active in Custom Mode (HMW93) 56
Figure 31 Relay Lo_active in Custom Mode (HMW93)..... 56
Figure 32 Trimmer Centering Screen 66
Figure 33 Trimmer Centering Screen 67
Figure 34 HTM10 and TM10 Modules..... 69
Figure 35 Replacing the HTM10 Module (HMW93) 70
Figure 36 DIP Switches in Factory Reset Position..... 75
Figure 37 DIP Switches in Factory Reset Position (HMW95) 76
Figure 38 HMW90 Series Dimensions 81
Figure 39 Dimensions of the Mounting Base 81

AKRIBIS · www.akribis.info · contacto@akribis.info

List of Tables

Table 1 Manual Revisions 8
Table 2 Related Manuals 8
Table 3 HMW90 Series Transmitters 12
Table 4 Parameters Supported by HMW90 Series 13
Table 5 Rotary Switch and Relay Setpoint 21
Table 6 Serial Interface Settings 38
Table 7 Basic Serial Commands 40
Table 8 Advanced Serial Commands 40
Table 9 FORM Command Parameters 53
Table 10 FORM Command Modifiers 53
Table 11 Troubleshooting Table 71
Table 12 Error Messages 72
Table 13 Performance 78
Table 14 Operating Environment 78
Table 15 Inputs and Outputs 79
Table 16 Mechanics 80
Table 17 HMW90 Series Spare Parts and Accessories 80
Table 18 Device Object Properties 85
Table 19 Relative Humidity Object Properties 87
Table 20 Status Flags 87
Table 21 Reliability 87
Table 22 Event State 87
Table 23 Calculated Humidity Objects 88
Table 24 Calculated Humidity Object Properties 88
Table 25 Status Flags 88
Table 26 Reliability 89
Table 27 Event State 89
Table 28 Temperature Object Properties 90
Table 29 Status Flags 90
Table 30 Reliability 90
Table 31 Event State 90
Table 32 Operation Pressure Object Properties 91
Table 33 Status Flags 91
Table 34 Operation Altitude Object Parameters 92
Table 35 Status Flags 92
Table 36 BACnet Smart Sensor BIBBs Support 93
Table 37 BACnet Standard Application Services Support 94
Table 38 Modbus Functions Supported by HMW90 95
Table 39 HMW90 Modbus Measurement Data Registers 95
Table 40 HMW90 Modbus Status Registers (Read-only) 96
Table 41 HMW90 Modbus Error Code Bits 96
Table 42 HMW90 Modbus Configuration Parameter Registers 96
Table 43 HMW90 Modbus Device Identification 97
Table 44 HMW90 Modbus Exception Responses 97

AKRIBIS · www.akribis.info · contacto@akribis.info

CHAPTER 1
GENERAL INFORMATION

This chapter provides general notes for the manual and HMW90 series transmitters.

About This Manual

This manual provides information for installing, operating, and maintaining HMW90 series transmitters. All transmitter models in the HMW90 series are covered, which means that some information in the manual is model-specific.

Contents of This Manual

This manual consists of the following chapters:

- Chapter 1, General Information, provides general notes for the manual and HMW90 series transmitters.
- Chapter 2, Product Overview, introduces the features, advantages, and the product nomenclature.
- Chapter 3, Installation, provides you with information that is intended to help you install the HMW90 series transmitters.
- Chapter 4, Operation, contains information that is needed to operate the HMW90 series transmitters.
- Chapter 5, Maintenance, provides information that is needed in basic maintenance of the HMW90 series.
- Chapter 6, Troubleshooting, describes common problems, their probable causes and remedies, and provides contact information for technical support.
- Chapter 7, Technical Data, provides the technical data of the HMW90 series transmitters.
- Appendix A, BACnet Reference,describes the BACnet protocol implementation of the HMW90 series digital transmitters.
- Appendix B, Modbus Reference, describes the Modbus protocol implementation of the HMW90 series digital transmitters.

AKRIBIS · www.akribis.info · contacto@akribis.info

Version Information

Table 1 Manual Revisions

Manual Code	Description
M211399EN-H	April 2016. This manual. Updated sections: - Transmitter Parts on page 14. - Technical Data on page 78. - Modbus Reference on page 95.
M211399EN-G	March 2015. Previous version. Added description of the Decorative Cover accessory. Updated description of BACnet and Modbus protocol implementations. Various small updates.
M211399EN-F	February 2013. Updated description of DIP switch settings for the digital output models. Updated description of UNIT command.

Related Manuals

Table 2 Related Manuals

Manual Code	Manual Name
M211511EN	HMW90 and GMW90 Series Quick Guide for Digital Output models
M211398EN	HMW90 and GMW90 Series Quick Guide for Analog Output models
M211476EN	Decorative Cover Quick Guide
M211606EN	Decorative Cover Printable Insert

Documentation Conventions

Throughout the manual, important safety considerations are highlighted as follows:

WARNING	Warning alerts you to a serious hazard. If you do not read and follow instructions very carefully at this point, there is a risk of injury or even death.

CAUTION	Caution warns you of a potential hazard. If you do not read and follow instructions carefully at this point, the product could be damaged or important data could be lost.

NOTE	Note highlights important information on using the product.

AKRIBIS · www.akribis.info · contacto@akribis.info

Safety

The HMW90 series transmitter delivered to you has been tested and approved as shipped from the factory. Note the following precautions:

WARNING	Connect only de-energized wires.

CAUTION	Do not modify the unit. Improper modification can damage the product or lead to malfunction.

ESD Protection

Electrostatic Discharge (ESD) can cause immediate or latent damage to electronic circuits. Vaisala products are adequately protected against ESD for their intended use. It is possible to damage the product, however, by delivering electrostatic discharges when touching, removing, or inserting any objects inside the equipment housing.

To make sure you are not delivering high static voltages yourself:

- Handle ESD sensitive components on a properly grounded and protected ESD workbench.
- Always hold component boards by the edges and avoid touching the component contacts.

Recycling

Recycle all applicable material.

Dispose of the unit according to statutory regulations.
Do not dispose of with regular household refuse.

AKRIBIS · www.akribis.info · contacto@akribis.info

Regulatory Compliances

The HMW90 series complies with the following performance and environmental test standards:

- EMC-Directive

Conformity is shown by compliance with the following standards:

- EN 61326-1: Electrical equipment for measurement, control, and laboratory use – EMC requirements – for use in industrial locations.
- EN 550022: Information technology equipment – Radio disturbance characteristics – Limits and methods of measurement.

Trademarks

HUMICAP® is a registered trademark of Vaisala Oyj.

Windows® is a registered trademark of Microsoft Corporation in the United States and/or other countries.

Software License

This product contains software developed by Vaisala. Use of the software is governed by license terms and conditions included in the applicable supply contract or, in the absence of separate license terms and conditions, by the General License Conditions of Vaisala Group.

Warranty

Visit our Internet pages for standard warranty terms and conditions: www.vaisala.com/warranty.

Please observe that any such warranty may not be valid in case of damage due to normal wear and tear, exceptional operating conditions, negligent handling or installation, or unauthorized modifications. Please see the applicable supply contract or Conditions of Sale for details of the warranty for each product.

AKRIBIS · www.akribis.info · contacto@akribis.info

CHAPTER 2

PRODUCT OVERVIEW

This chapter introduces the features, advantages, and the product nomenclature.

Introduction to HMW90 Series

The HMW90 series transmitters are wall-mount transmitters for building automation applications. Transmitter models in the series share the following common features:

- Detachable mounting base for easy installation and wiring.
- Display (visible or hidden behind the cover).
- Sliding cover for accessing maintenance functions.
- Adjustment trimmers.
- DIP switches for most common configuration tasks.
- RS-485 line for temporary service use with hand-held MI70 indicator or computer.
- User exchangeable measurement module available as a spare part.

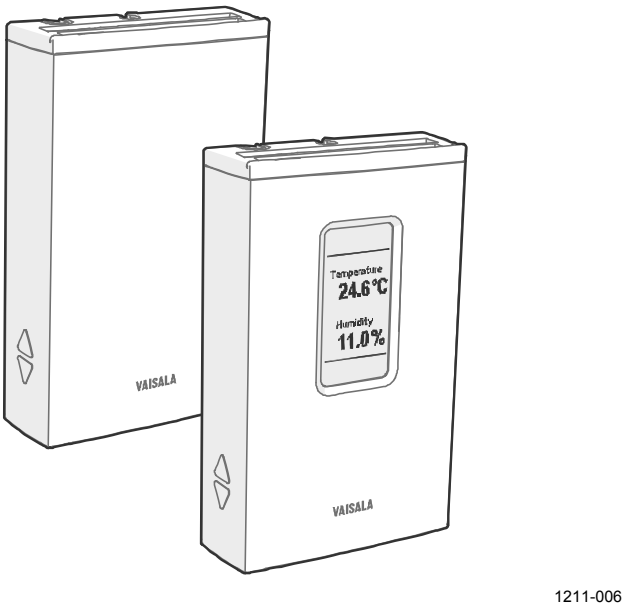

Figure 1 HMW90 Series Transmitters

AKRIBIS · www.akribis.info · contacto@akribis.info

HMW90 Series Transmitters

Table 3 below lists the most important differences between the HMW90 series transmitter models. For technical specifications, see Chapter 7, Technical Data, on page 78.

Table 3 HMW90 Series Transmitters

Product Code	Short Description
HMW92	Humidity and temperature transmitter with - two current outputs (4 ... 20 mA) - display hidden under sliding cover
HMW92D	Humidity and temperature transmitter with - two current outputs (4 ... 20 mA) - visible display
HMW93	Humidity and temperature transmitter with - two voltage outputs (0 ... 5 V or 0 ... 10 V) - relay - display hidden under sliding cover
HMW93D	Humidity and temperature transmitter with - two voltage outputs (0 ... 5 V or 0 ... 10 V) - relay - visible display
TMW92	Temperature transmitter with - one current output (4 ... 20 mA) - display hidden under sliding cover
TMW93	Temperature transmitter with - one voltage output (0 ... 5 V or 0 ... 10 V) - relay - display hidden under sliding cover
HMW95	Humidity and temperature transmitter with - digital output (isolated RS-485) - BACnet MS/TP or Modbus protocol (DIP switch setting) - display hidden under sliding cover
HMW95D	Humidity and temperature transmitter with - digital output (isolated RS-485) - BACnet MS/TP or Modbus protocol (DIP switch setting) - visible display
HMW90 TMW90	HMW90 series wall-mount transmitter that has been customized at Vaisala. Check type label on transmitter body and terminal label on the mounting base. Note for customized transmitters with analog outputs: Keep the transmitter in custom mode (DIP switch 8 set to custom) to retain the custom configuration.

AKRIBIS · www.akribis.info · contacto@akribis.info

Output Parameters Explained

Table 4 Parameters Supported by HMW90 Series

Parameter	Symbol	Unit(s)	Description
Temperature	T	°C °F	Temperature in Celsius or Fahrenheit scale.
Relative humidity	RH	%	Ratio of the partial pressure of water vapor in the air to the saturation vapor pressure of air at the current temperature.
Dewpoint	Td	°C °F	Temperature at which the water vapor in the air will condense into water at the current pressure.
Dewpoint	Tdf	°C °F	Same as Td, except when the dewpoint is below 0 °C, the transmitter outputs frostpoint (Tf) instead of dewpoint.
Dewpoint depression	dTd	°C °F	Difference between ambient temperature and dewpoint (Tdf).
Wet bulb temperature	Tw	°C °F	The minimum temperature that can be reached by evaporative cooling in the current conditions.
Absolute humidity	a	g/m3 gr/ft3	Quantity of water in a cubic meter (or cubic foot) of air.
Mixing ratio	x	g/kg gr/lb	Ratio of water vapor mass per kilogram (or pound) of dry air.
Enthalpy	h	kJ/kg btu/lb	Sum of the internal energy of a thermodynamic system.

NOTE Humidity parameters are not measured by TMW92, TMW93, and TMW90 transmitters even though the parameters can be selected using the service port (serial line and MI70 indicator use).

AKRIBIS · www.akribis.info · contacto@akribis.info

Transmitter Parts

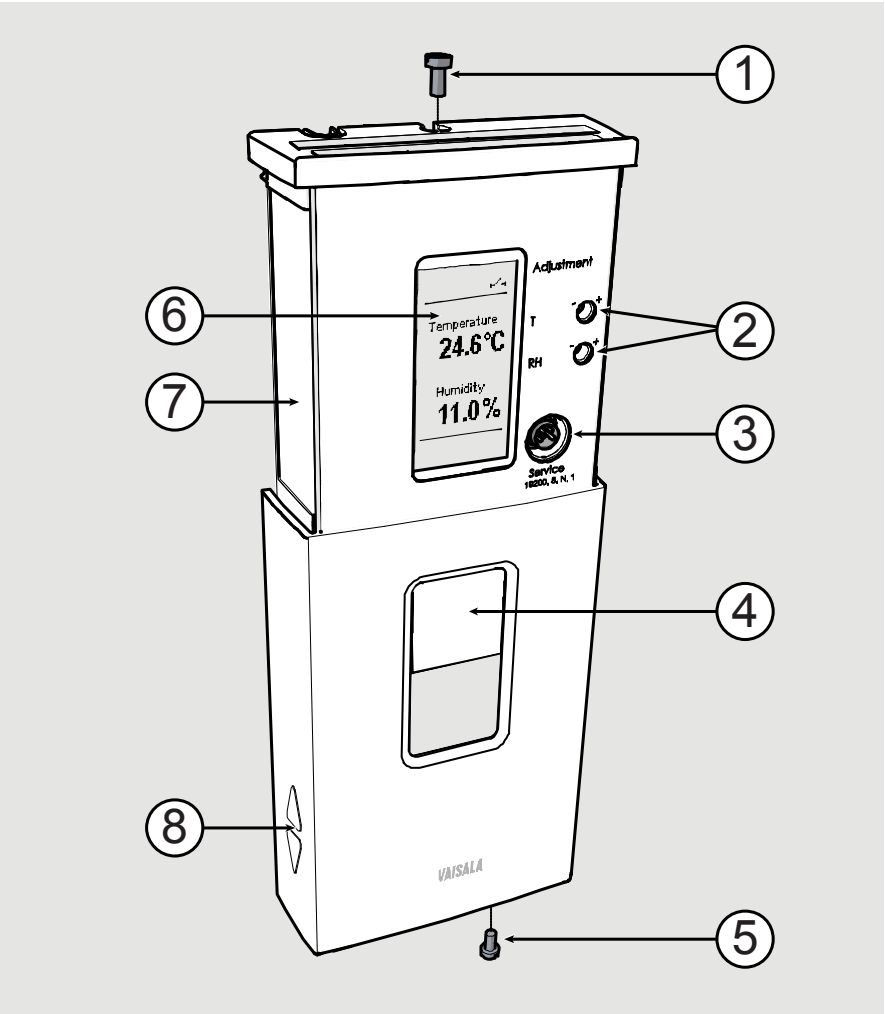

1201-004

Figure 2 Transmitter Parts - Outside

where

1 = Locking screw for mounting base (M3×6).
2 = Adjustment trimmers
3 = Service port
4 = Window for display (only in models where the display is visible)
5 = Locking screw for slide (M3×6).
6 = Display
7 = Type label
8 = Grip for slide

AKRIBIS · www.akribis.info · contacto@akribis.info

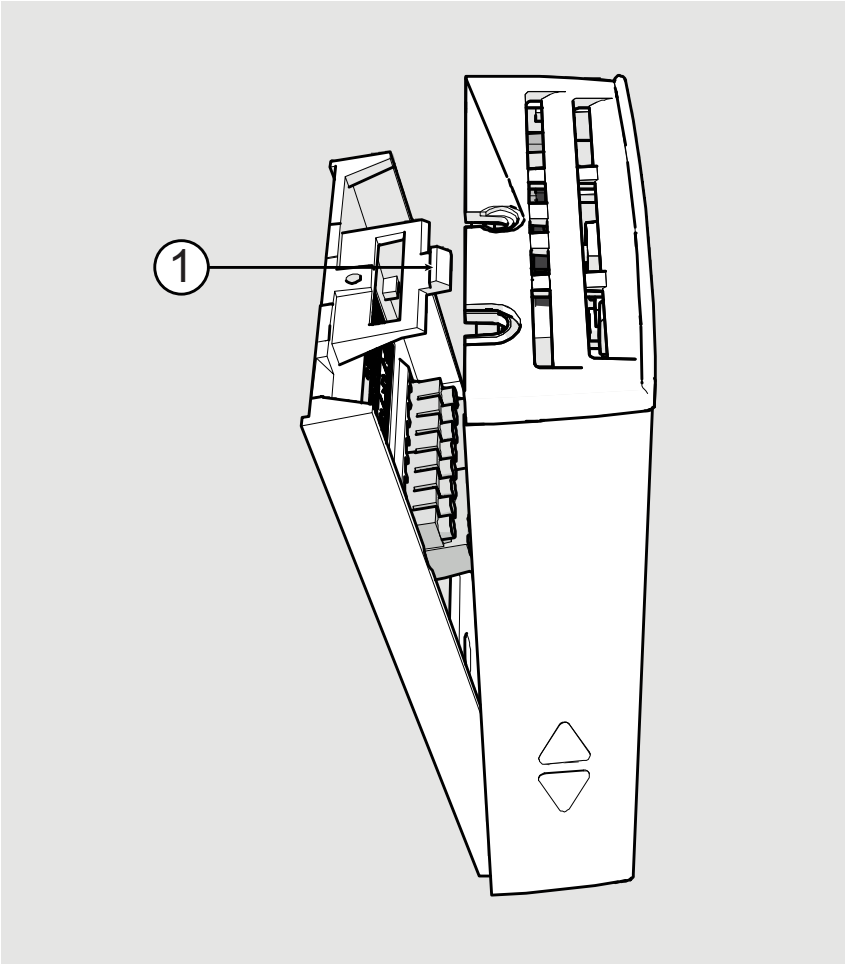

Figure 3 Opening the Transmitter

where

1 = Push tab down with a screwdriver to open the transmitter.

To open, use a screwdriver to push down the tab that holds the transmitter cover and mounting base together. Pull the mounting base away from the cover, starting from the top.

To close, connect the bottom of the transmitter first, and tilt the top forward to close the tab. Do not push on the display. Closing the transmitter starts it up if power is supplied to the screw terminals.

CAUTION	When opening or closing the transmitter, avoid damaging the transmitter electronics with the two plastic supports on the mounting base. See Figure 4 on page 16 and Figure 5 on page 17.

AKRIBIS · www.akribis.info · contacto@akribis.info

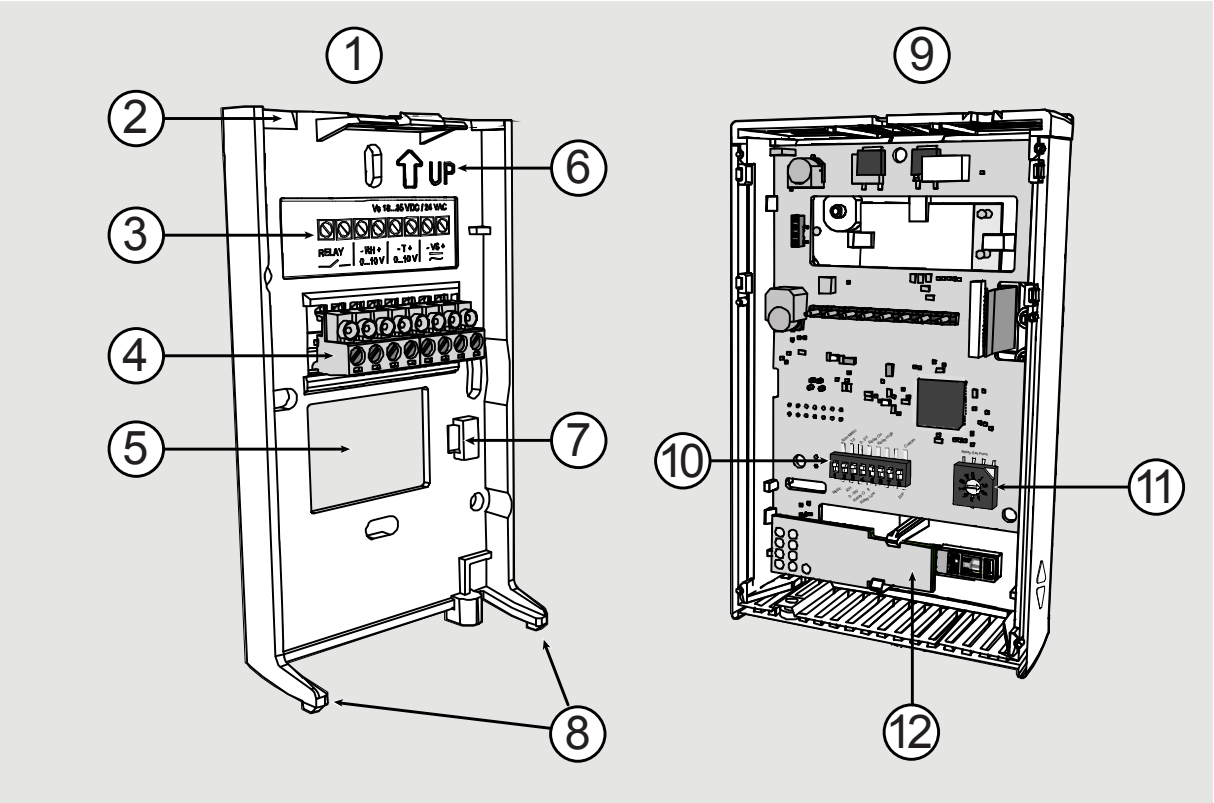

1201-006

Figure 4 Transmitter Parts – Inside (Analog Output Models)

where

1 = Mounting base
2 = Opening for cable (wiring from top)
3 = Terminal label
4 = Screw terminals
5 = Opening for cable (wiring from behind)
6 = Orientation arrow – should point up after the mounting base has been installed.
7 = Place for zip tie (for cable strain relief)
8 = Supports
9 = Transmitter body
10 = DIP switches for common configuration options; see section DIP Switches of Analog Output Models on page 20.
11 = Rotary switch for relay setpoint (only for models with relay); see section Relay Configuration in DIP Mode on page 21.
12 = HTM10 module with HUMICAP® sensor (HMW models) or TM10 module (TMW models, measures temperature only).

AKRIBIS · www.akribis.info · contacto@akribis.info

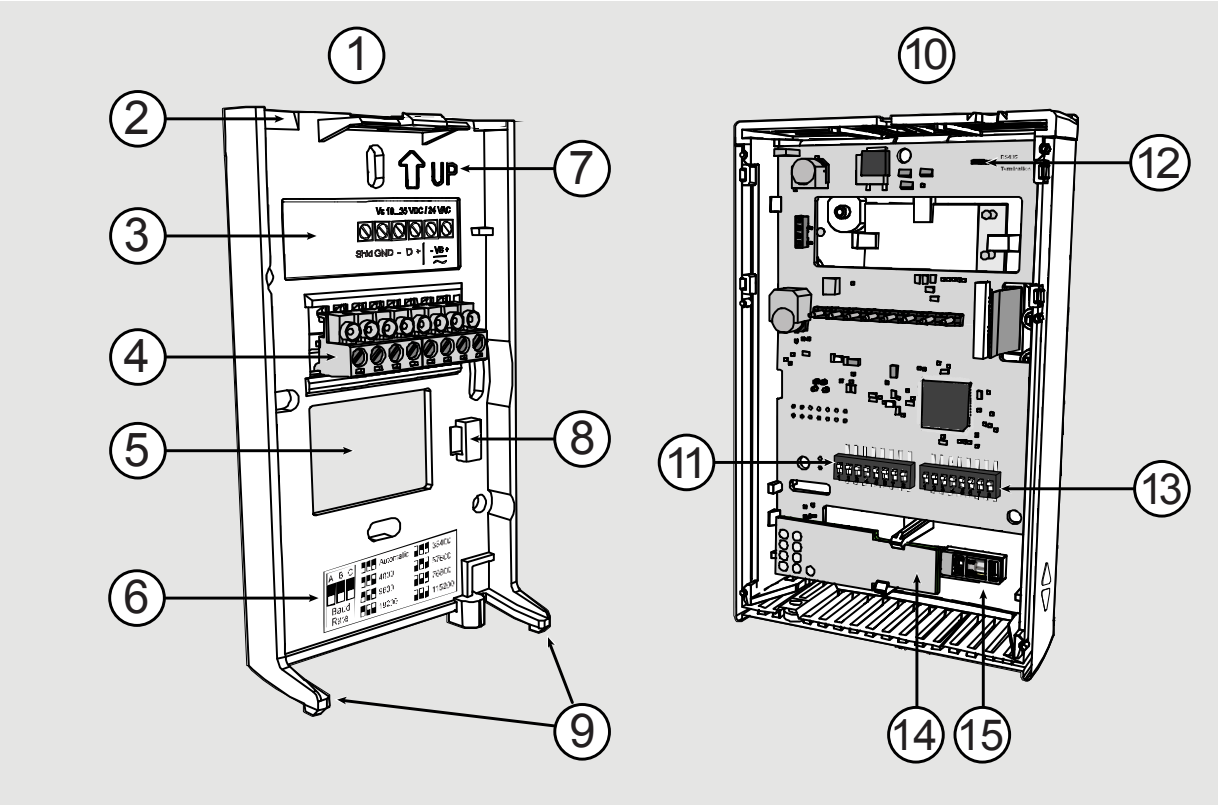

1209-013

Figure 5 Transmitter Parts – Inside (Digital Output Models)

where

1 = Mounting base
2 = Opening for cable (wiring from top)
3 = Terminal label
4 = Screw terminals.
5 = Opening for cable (wiring from behind)
6 = Label for RS-485 baud rate DIP switch settings
7 = Orientation arrow – should point up after the mounting base has been installed
8 = Place for zip tie (for cable strain relief)
9 = Supports
10 = Transmitter body
11 = DIP switches for common configuration options; see section DIP Switches of Digital Output Models on page 24
12 = RS-485 termination jumper (connects a 120 Ω resistor)
13 = DIP switches for transmitter address selection
14 = HTM10 module
15 = HUMICAP® sensor

AKRIBIS · www.akribis.info · contacto@akribis.info

Decorative Cover Option

The decorative cover is an installation accessory for HMW90 and GMW90 series transmitters that can be used to hide the transmitter from view. The cover material is transparent polycarbonate, but the idea is to customize it to match the wall the transmitter is on. There are two easy ways to change the cover's appearance:

- Paint the cover to the same color as the wall.
- Insert a piece of wallpaper under the lid.

You can also use the cover as a holder for printed material, for example an informational sign.

You must remove the sliding cover of the transmitter to install the decorative cover. Installation instructions are included with the cover.

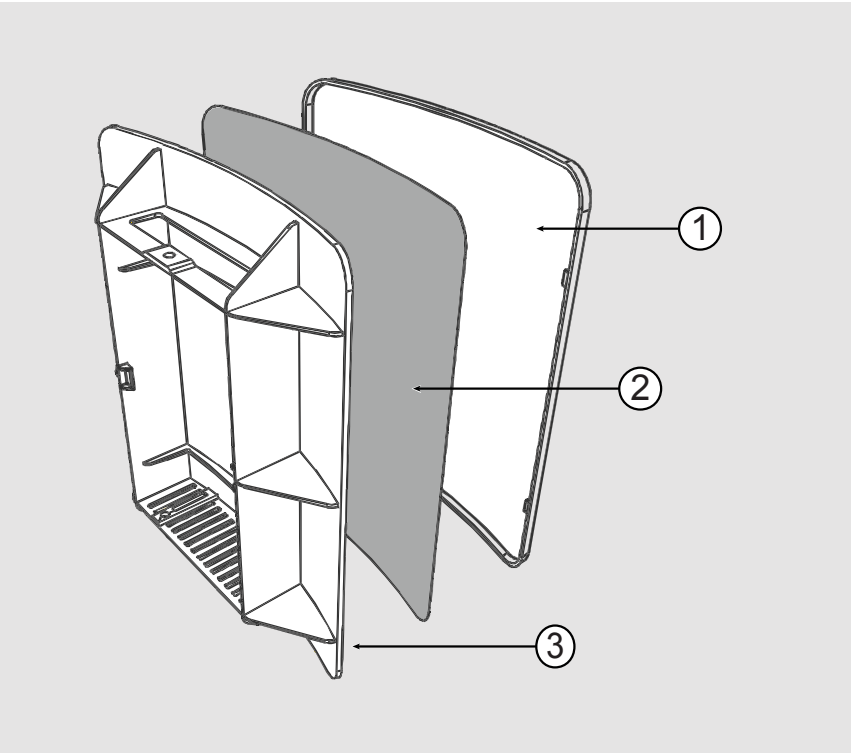

1310-042

Figure 6 Decorative Cover

1 = Decorative cover lid. If you intend to paint the cover, paint the outer surface of this part, and leave the other part entirely unpainted.
2 = Space for wallpaper or printed insert. The decorative cover is delivered with a quick guide that can be used as a stencil for cutting the required shape.
3 = Decorative cover base part.

AKRIBIS · www.akribis.info · contacto@akribis.info

CHAPTER 3
INSTALLATION

This chapter provides you with information that is intended to help you install the HMW90 series transmitters.

Configuration Before Installation

If you need to change the settings of the transmitter, it is best to do this before it has been installed. Available configuration options are different for analog output models (such as HMW93) and digital output models (for example, HMW95).

Configuration of Analog Output Models

You can configure analog output models of HMW90 series transmitters in two ways:

- Using the DIP switches (and rotary switch on the HMW93 and TMW93) on the component board. See the following sections for instuctions:
  - DIP Switches of Analog Output Models on page 20
  - Relay Configuration in DIP Mode on page 21
- Configuring the settings in software through the service port. See connection instructions and serial line commands in Chapter 4, Operation, on page 34.

These two configuration methods are mutually exclusive. If the DIP switch configuration is used, software settings have no effect on settings that are controlled by the DIP switches. DIP switch number 8 is the master switch that controls which configuration method is used.

AKRIBIS · www.akribis.info · contacto@akribis.info

DIP Switches of Analog Output Models

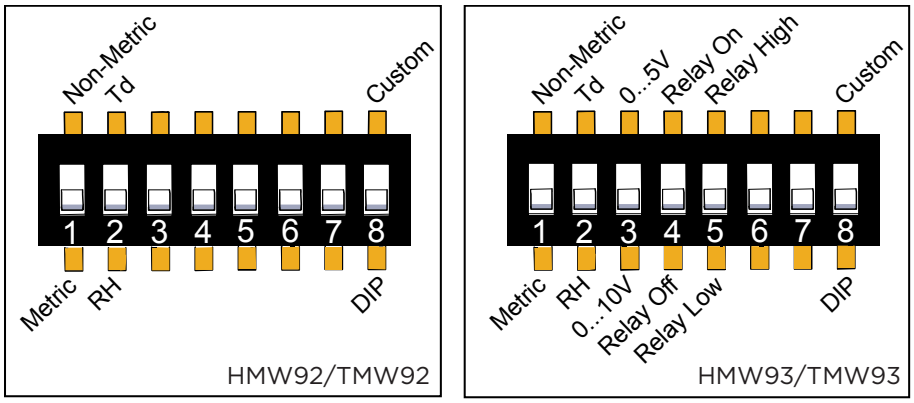

Figure 7 DIP Switch Settings of Analog Output Models

DIP	Position	Setting
1	Non-metric	Non-metric units (°F).
	Metric	Metric units (°C).
2	Td	Td (dewpoint) as humidity parameter on display and analog output. Sets analog output scaling to -20 ... +55 °C.
	RH	RH (relative humidity) as humidity parameter on display and analog output. Sets analog output scaling to 0 ... 100 %RH.
3	0...5V	0...5V analog output (both channels).
	0...10V	0...10V analog output (both channels).
4	Relay On	Relay enabled.
	Relay Off	Relay disabled.
5	Relay High	Relay closed when measurement above setpoint. Relay operation is linked to RH on HMW93, and T on TMW93.
	Relay Low	Relay closed when measurement below setpoint.
6	Not used	
7	Not used	
8	Custom	Configuration through service port only.
	DIP	Configuration by DIP switches only.

NOTE DIP switch 2 does nothing on TMW92 and TMW93.

NOTE If DIP switch 8 is set to **Custom**, the transmitter ignores all other DIP switch settings. In custom mode the transmitter uses settings that are configured in software using the service port. Before changing the position of this switch, see section Changing Between DIP and Custom Configuration on page 23.

AKRIBIS · www.akribis.info · contacto@akribis.info

Relay Configuration in DIP Mode

NOTE Relay is included on HMW93 and TMW93 transmitters only.

When the transmitter is configured using DIP switches, the functioning of the relay is configured by DIP switch 5 and the rotary switch on the component board:

- DIP switch 5 determines if the relay is closed above or below the setpoint.
- The position of the rotary switch determines the setpoint according to the table below.

Table 5 Rotary Switch and Relay Setpoint

Rotary Switch Position	Setpoint on HMW93	Setpoint on TMW93
0	5 %RH	0 °C (32 °F)
1	10 %RH	5 °C (41 °F)
2	20 %RH	10 °C (50 °F)
3	30 %RH	15 °C (59 °F)
4	40 %RH	20 °C (68 °F)
5	50 %RH	25 °C (77 °F)
6	60 %RH	30 °C (86 °F)
7	70 %RH	35 °C (95 °F)
8	80 %RH	40 °C (104 °F)
9	90 %RH	45 °C (113 °F)

NOTE The rotary switch only has 10 positions. Do not turn the switch so that it is between two positions.

For examples of relay behavior in DIP mode, see Figure 8 and Figure 9 on page 22. Note also the following:

- Relay operation in DIP mode is linked to RH measurement on HMW93, and to T measurement on TMW93.
- Relay contacts are open if the transmitter is in error state (an active error is present).
- Relay contacts are open when transmitter is powered off.

If you need to configure the relay for some other parameter or need additional configuration options, see section Relay Configuration in Custom Mode on page 54.

AKRIBIS · www.akribis.info · contacto@akribis.info

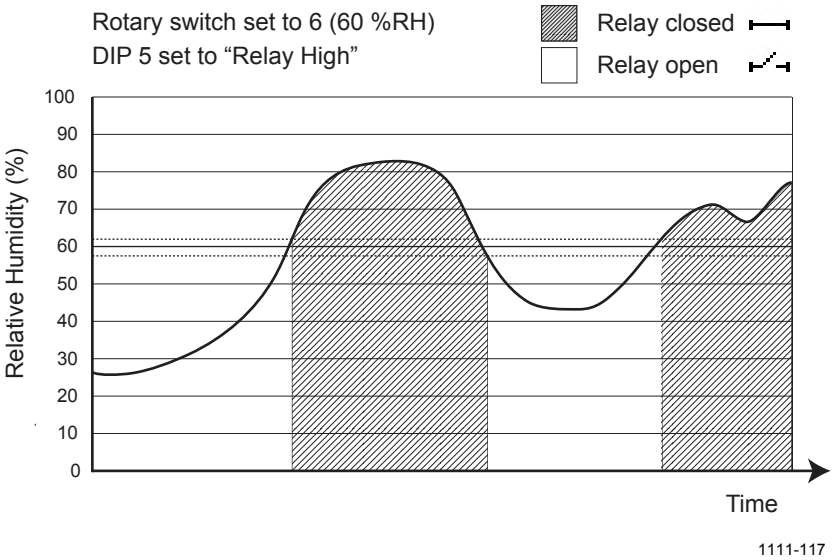

Figure 8 Relay High in DIP Mode (HMW93)

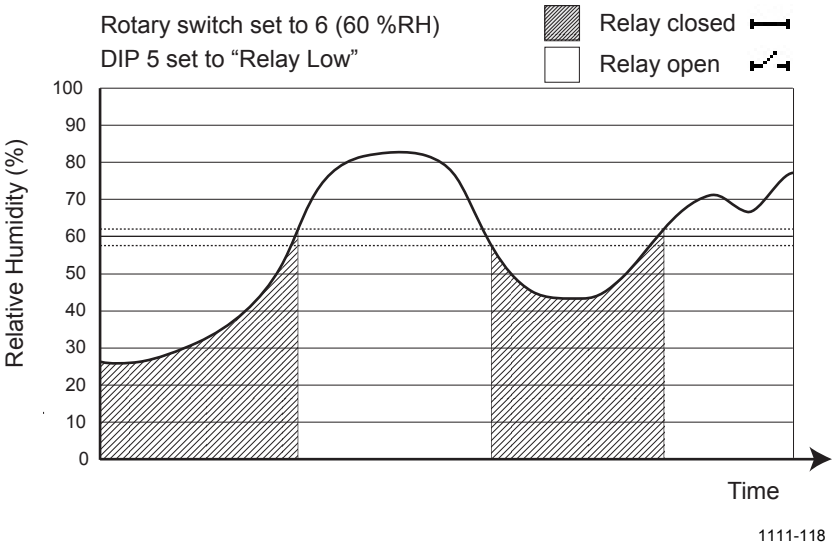

Figure 9 Relay Low in DIP Mode (HMW93)

NOTE

There is a hysteresis around the setpoint value to prevent rapid relay switching when the measured value moves around the setpoint. This means that the relay will not close or open exactly at the setpoint, but slightly above and below.

- On HMW93 the hysteresis is 2 %RH in both directions.
- On TMW93 the hysteresis is 1 °C (1.8 °F) in both directions.

AKRIBIS · www.akribis.info · contacto@akribis.info

Changing Between DIP and Custom Configuration

If you change the position of DIP switch 8, note the following:

When changing from **DIP** to **Custom**: The DIP settings that were used when the power was last on are carried over to the custom settings at next power up.

When changing from **Custom** to **DIP**: Current custom settings are overwritten by the settings from the DIP switches at next power up. Display layout and analog outputs are set to default settings:

- Channel 1 output parameter T, scaling -5 ... +55 °C.
- Channel 2 output parameter RH, scaling 0 ... 100 %RH (if humidity measurement is present on the transmitter).

If you have a factory customized transmitter, this may lead to a situation where the wiring label on the mounting base does not reflect the outputs of the transmitter. To return the transmitter to its factory customized settings, follow the instructions in section Reverting to Factory Settings on page 75.

Configuration of Digital Output Models

Digital output models of the HMW90 series have the following configuration interfaces:

- DIP switches on the component board control operating protocol, serial line settings, and transmitter MAC address. For instructions, see DIP Switches of Digital Output Models on page 24.
- You can set a jumper for RS-485 line termination on the component board (120 Ω resistor). For location of the jumper, see Figure 5 on page 17.
- Other settings are configured in software. You can change most configuration settings through the service port. For connection instructions and serial line commands, see Chapter 4, Operation, on page 34.
- Some configuration actions can be done using the BACnet and Modbus protocols. See the following appendices for protocol implementation details:
    - Appendix A, BACnet Reference, on page 82.
    - Appendix B, Modbus Reference, on page 95.

AKRIBIS · www.akribis.info · contacto@akribis.info

DIP Switches of Digital Output Models

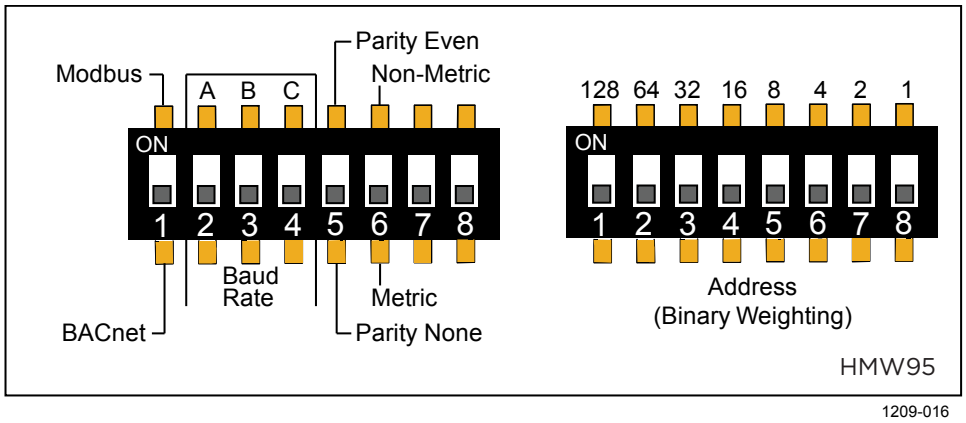

Figure 10 DIP Switch Settings of Digital Output Models

DIP	Position			Setting
1	Modbus			Modbus protocol in use.
	BACnet			BACnet protocol in use.
2 ... 4	A	B	C	Serial line baud rate.
	Off	Off	Off	Automatic (default).
	Off	Off	On	4800 (not available with BACnet protocol)
	Off	On	Off	9600
	Off	On	On	19200
	On	Off	Off	38400
	On	Off	On	57600
	On	On	Off	76800
	On	On	On	115200
5	Parity Even			Selects 8 data bits, parity even, one stop bit (8E1) for Modbus protocol.
	Parity None			Selects 8 data bits, parity none, and two stop bits (8N2) for Modbus protocol.
6	Non-Metric			Uses non-metric units on display and service port. No effect on Modbus and BACnet.
	Metric			Uses metric units on display and service port. No effect on Modbus and BACnet.
7	Not used			
8	Not used			

NOTE If the serial line baud rate is set to **Automatic**, the transmitter attempts to determine the baud rate of the traffic in the RS-485 network. The transmitter cycles through all baud rate choices, listening for 10 seconds at each rate. When it detects valid RS-485 traffic, it remains at the detected baud rate until it is reset or power cycled.

NOTE The parity setting is only relevant for Modbus protocol, in which it chooses between 8N2 (parity none) and 8E1 (parity even) formats.

AKRIBIS · www.akribis.info · contacto@akribis.info

Dip switches marked **Address (Binary Weighting)** set the MAC address of the HMW90 series digital transmitter. The address is encoded in eight bit binary form, with each numbered switch representing a single bit. For example:

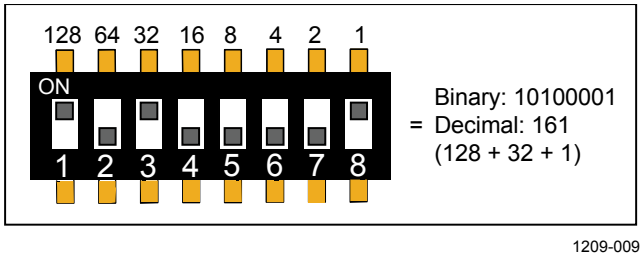

Figure 11 Example of Transmitter Addressing

Addressing with BACnet Protocol

BACnet MS/TP MAC address range is 0 … 255. The transmitter is a BACnet MS/TP master if address is below 128. Otherwise the transmitter is a slave.

Addressing with Modbus Protocol

Transmitter is always a Modbus slave. MAC Address range for Modbus slaves is 1 … 247.

AKRIBIS · www.akribis.info · contacto@akribis.info

Selecting Location

The conditions at the location should represent well the area of interest. Do not install the transmitter on the ceiling. Avoid placing the transmitter near heat and moisture sources, close to the discharge of the supply air ducts, and in direct sunlight.

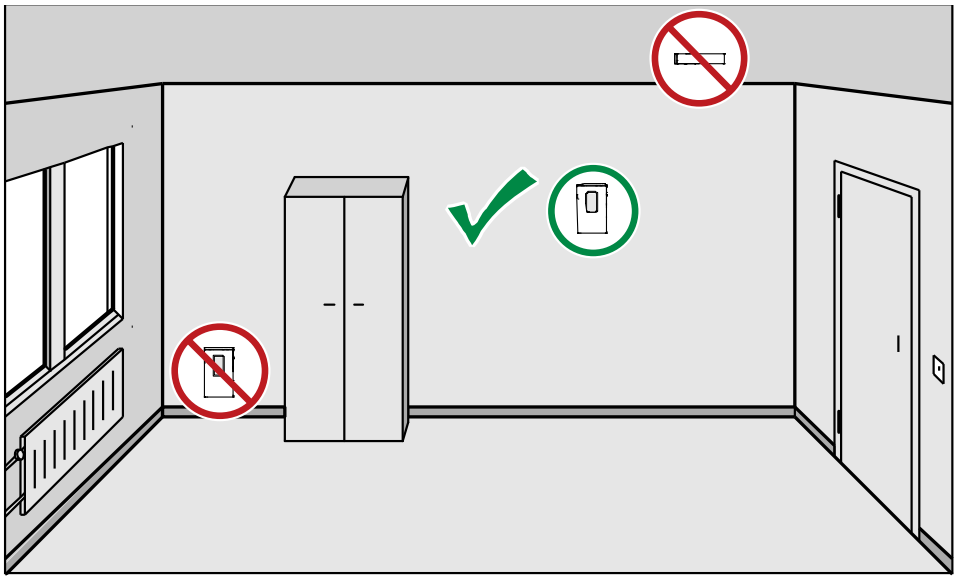

1111-070

Figure 12 Selecting Transmitter Location

Use the mounting holes to attach the mounting base securely. Use at least two screws (not included, max screw diameter 4 mm). Remember to leave sufficient clearance below the transmitter to operate the slide. For mounting dimensions, see section Dimensions in mm on page 81.

NOTE	When bringing a cable through the wall, note that the hole may also supply air from outside the room into the transmitter. This may affect the measurement readings. Seal the cable opening if necessary.

AKRIBIS · www.akribis.info · contacto@akribis.info

Installing the Mounting Base

Use the mounting holes to attach the mounting base securely. Use at least two screws (not included). The arrow on the mounting base must point straight up after installation. **Proper orientation is important**: air must flow through the vents on the bottom and top.

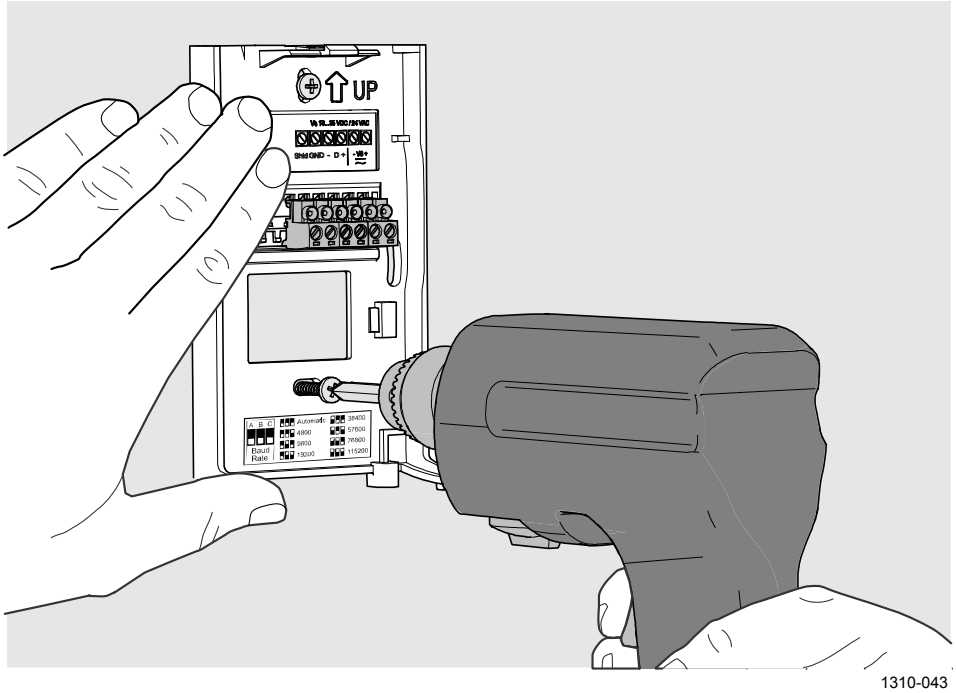

Figure 13 Installing the Mounting Base

Wiring

Connect the wiring to the screw terminals on the mounting base. The supply voltage and terminal assignments are model-specific. Max wire size 2 mm^2 (AWG14). You can bring the cable to the housing from above or from behind (recommended).

After completing the wiring, connect the transmitter body over the mounting base. Note that mounting bases are model-specific.

WARNING	Connect only de-energized wires.

AKRIBIS · www.akribis.info · contacto@akribis.info

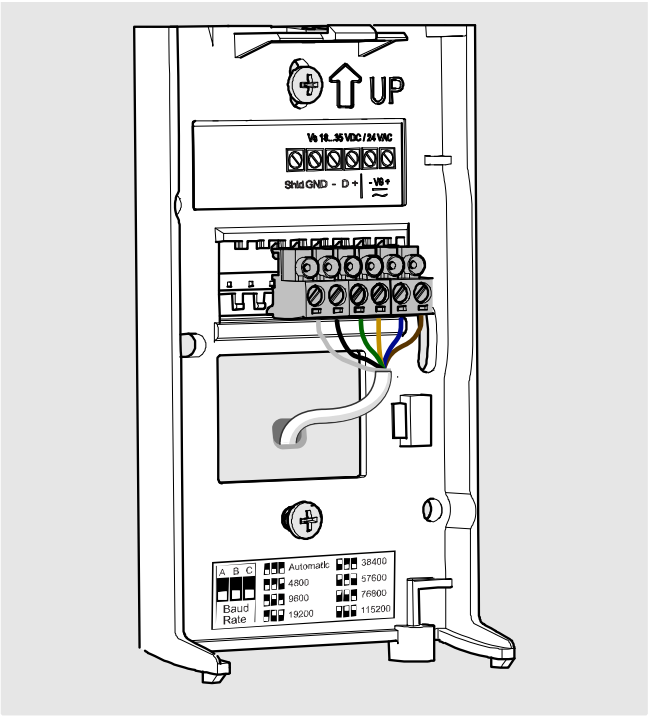

1310-044

Figure 14 Wiring from Behind (Recommended)

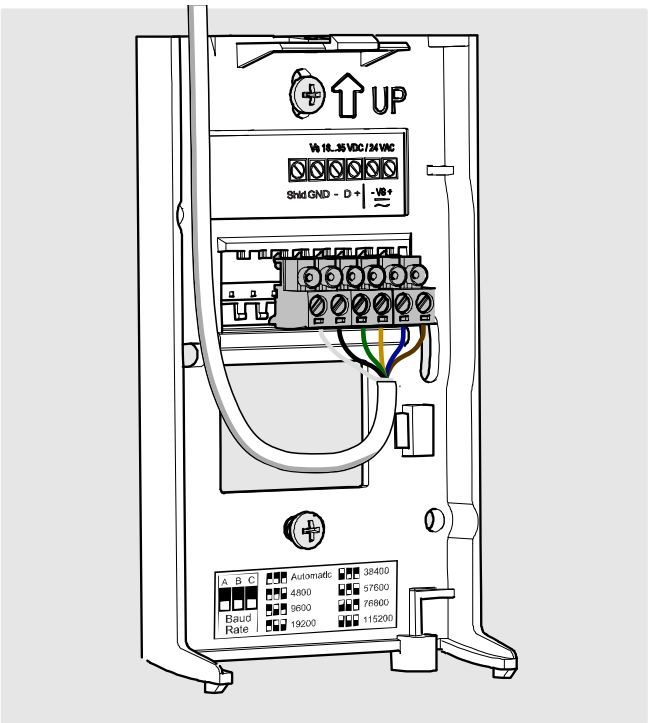

1310-045

Figure 15 Wiring from Above

AKRIBIS · www.akribis.info · contacto@akribis.info

Wiring HMW92

You must connect the RH channel of the HMW92, even if you only want to measure temperature. Connecting the T channel is optional.

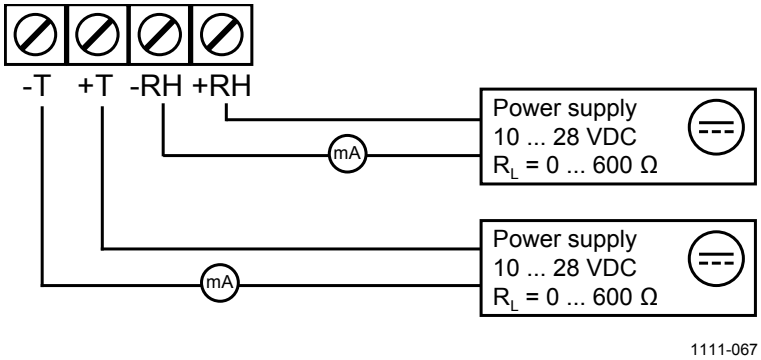

Figure 16 Wiring HMW92

If you want to use a single power supply for the HMW92, you must connect the positive terminals (+T and +RH) together.

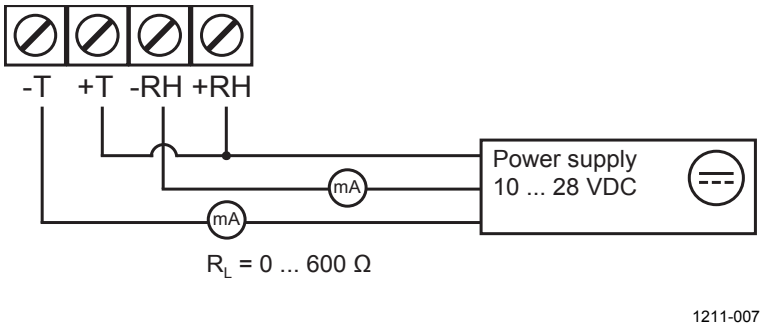

Figure 17 Three-Wire Wiring for HMW92

AKRIBIS · www.akribis.info · contacto@akribis.info

Wiring HMW93

Recommended wiring for long cables:

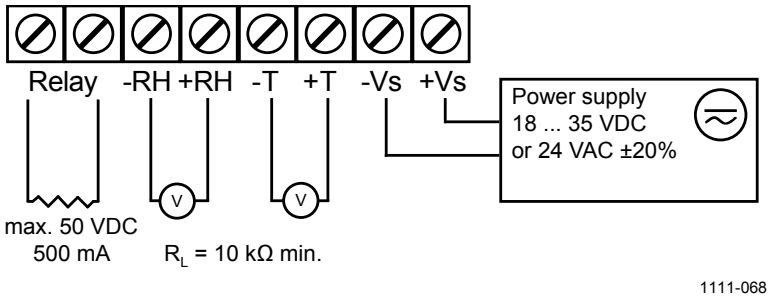

Figure 18 Wiring HMW93

3-wire connection with -Vs as common ground. Maximum cable resistance is 2.5 Ω (24V supply, 0 ... 10 V output, relay not used).

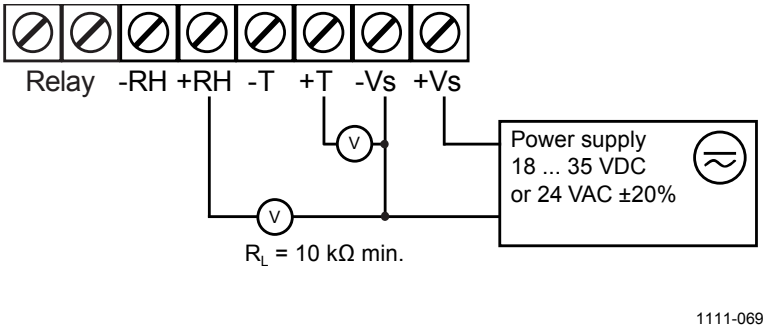

Figure 19 Three-Wire Wiring for HMW93

AKRIBIS · www.akribis.info · contacto@akribis.info

Wiring TMW92

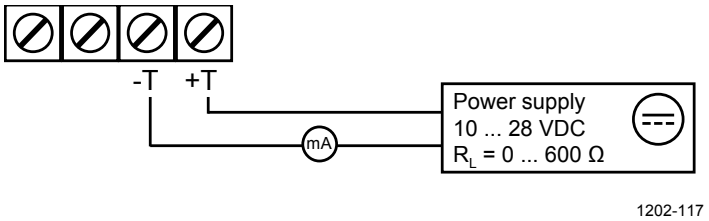

Figure 20 Wiring TMW92

Wiring TMW93

Recommended wiring for long cables:

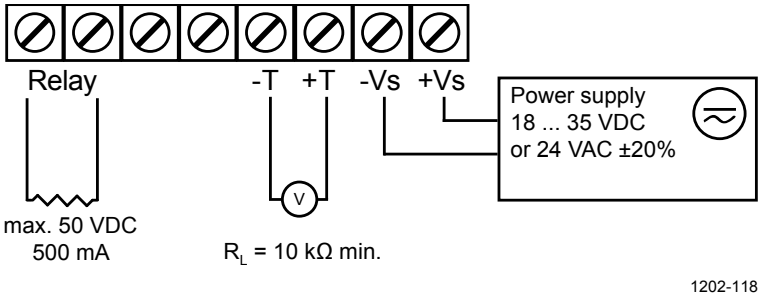

Figure 21 Wiring TMW93

3-wire connection with -Vs as common ground. Maximum cable resistance is 2.5 Ω (24V supply, 0 ... 10 V output, relay not used).

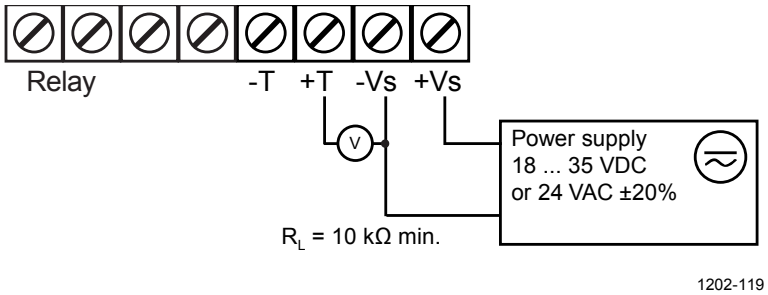

Figure 22 Three-Wire Wiring for TMW93

AKRIBIS · www.akribis.info · contacto@akribis.info

Wiring HMW95

The RS-485 line of the transmitter is isolated from the power supply. A separate ground reference terminal (**GND**) is provided for the RS-485 connection.

If you are using a shielded cable, you can use the **Shld** terminal to hold the exposed part of the shield. Note that the Shld terminal is floating (not electrically connected).

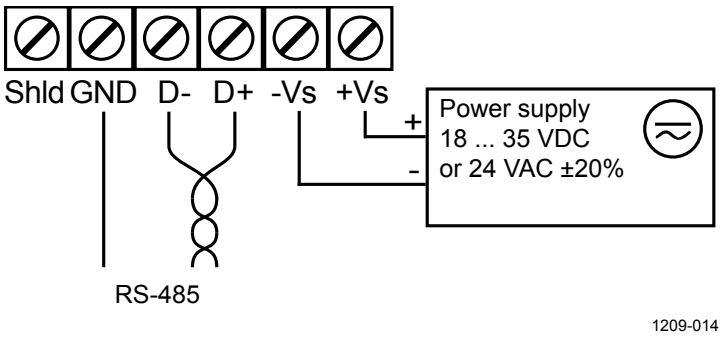

Figure 23 Wiring HMW95

Connecting Several Transmitters on Same RS-485 Line (HMW95)

Set the RS-485 termination jumper to “ON” on the transmitter that is at the end of the line. This terminates the line with a 120 Ω resistor. For location of the jumper, see section Transmitter Parts - Inside on page 6.

Connect the cable shield to ground on the building controller side.

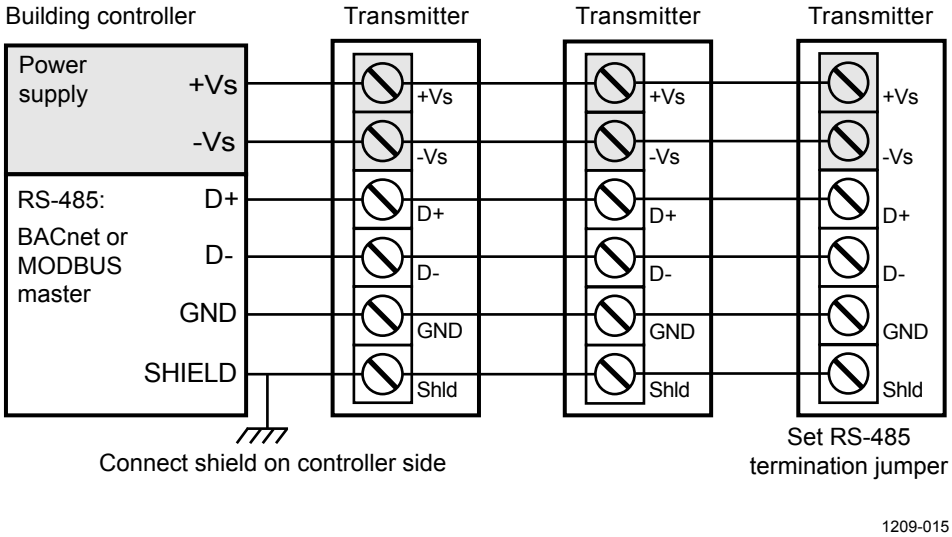

Figure 24 Several Transmitters on Same RS-485 Line

AKRIBIS · www.akribis.info · contacto@akribis.info

Connecting a Common AC Power Supply to Several Transmitters

If you are connecting a common 24 VAC power supply to several transmitters, make sure to connect the same terminal to +Vs and –Vs on all transmitters. This will avoid a short-circuit through the shared common line at the controller; see Figure 25 below.

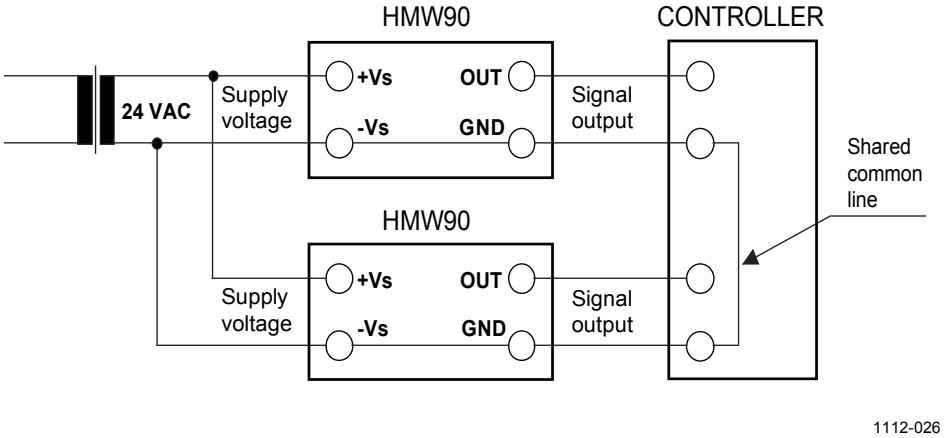

Figure 25 Connecting a Common AC Power Supply

AKRIBIS · www.akribis.info · contacto@akribis.info

CHAPTER 4

OPERATION

This chapter contains information that is needed to operate the HMW90 series transmitters.

Display

Startup Screens

When the transmitter is powered on, it displays a sequence of information screens. The screens are shown for a few seconds each.

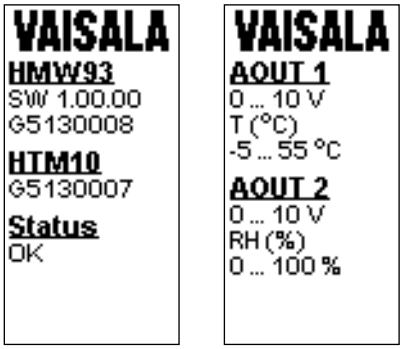

1111-073, 1111-074

Figure 26 HMW93 Startup Screens

AKRIBIS · www.akribis.info · contacto@akribis.info

Measurement Screen

Measurement screen shows the measured parameters and currently active indicators.

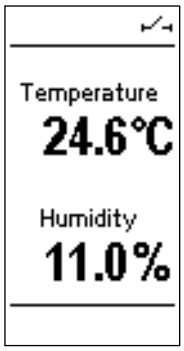

1111-071

Figure 27 HMW93 Measurement Screen – Normal Operation

If there is a problem with measurement, affected readings are replaced with stars. The alarm indicator and an error message will also appear on the screen.

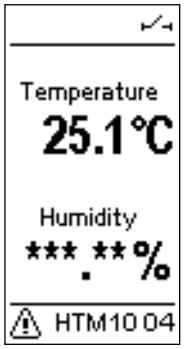

1111-072

Figure 28 HMW93 Measurement Screen – Problem With Measurement

AKRIBIS · www.akribis.info · contacto@akribis.info

Indicators on the Display

Indicator	Position on Screen	Meaning
	Top right	Communication arrows. Shown only on models with digital output. Down arrow is shown when transmitter detects valid traffic on the RS-458 line. Up arrow is shown when transmitter is transmitting to the RS-485 line.
	Top right	Is shown when relay contacts are open (HMW93 and TMW93 only).
	Top right	Is shown when relay contacts are closed (HMW93 and TMW93 only).
	Top left	Is shown when an MI70 Indicator is connected to the service port.
	Bottom left	Is shown if an error is active. The error message is written after the indicator. See section Error Messages on page 72.

Service Port

You can connect to the service port on the HMW90 series transmitters using a computer or an MI70 indicator. The MI70 indicator is the hand-held display device that is included with, for example, the Vaisala HUMICAP® Hand-Held Humidity and Temperature Meter HM70.

CAUTION The service port is not galvanically isolated from the rest of the transmitter electronics. Connect only equipment with a floating power supply (not grounded) to the service port. If you connect a device that is grounded to a different potential than the transmitter's power supply, you will affect the accuracy of the transmitter's analog outputs. You may even affect the transmitter's functionality or cause damage to the transmitter.

Connecting With an MI70 Indicator

When connecting using an MI70 indicator, use the connection cable for HM70 hand-held meter (Vaisala order code 219980). The following functionality is available when using the MI70:

- Standard MI70 functions such as viewing, logging, and graphs of measurement results.
- Calibration and adjustment fuctions for the transmitter. For more information, see section Adjustment Using an HM70 on page 67.
- Setting of the pressure compensation value for humidity measurement (**Environment** menu in the MI70).

AKRIBIS · www.akribis.info · contacto@akribis.info

Connecting With a Computer

Connecting with a computer allows you to configure and troubleshoot your transmitter using serial line commands. For a list of commands, see section List of Serial Commands on page 40.

When connecting using a computer, use the Vaisala USB cable (Vaisala order code 219690) and a suitable terminal application:

- If you have not used the Vaisala USB cable before, install the driver before attempting to use the cable. Refer to section Installing the Driver for the USB Service Cable on page 37 for detailed instructions.
- For more information on using a terminal application, see section Terminal Application Settings on page 38.

Installing the Driver for the USB Service Cable

Before taking the USB service cable into use, you must install the provided USB driver on your computer. When installing the driver, you must acknowledge any security prompts that may appear.

1. Check that the USB service cable is not connected. Disconnect the cable if you have already connected it.
2. Insert the media that came with the cable, or download the latest driver from www.vaisala.com/software.
3. Execute the USB driver installation program (setup.exe), and accept the installation defaults. The installation of the driver may take several minutes.
4. After the driver has been installed, connect the USB service cable to a USB port on your computer. Windows will detect the new device, and use the driver automatically.
5. The installation has reserved a COM port for the cable. Verify the port number, and the status of the cable, using the **Vaisala USB Instrument Finder** program that has been installed in the Windows Start menu.

Windows will recognize each individual cable as a different device, and reserve a new COM port. Remember to use the correct port in the settings of your terminal program.

AKRIBIS · www.akribis.info · contacto@akribis.info

Terminal Application Settings

The serial interface settings of the service port are presented in Table 6 below. The settings are fixed, and cannot be changed by the user.

Table 6 Serial Interface Settings

Property	Description / Value
Baud rate	19200
Parity	None
Data bits	8
Stop bits	1
Flow control	None

The steps below describe how to connect to the transmitter using the PuTTY terminal application for Windows (available for download at www.vaisala.com/software) and a USB serial interface cable:

1. Connect the USB serial interface cable between your computer and the service port of the transmitter.
2. Start the PuTTY application.
3. Select the **Serial** settings category, and check that the correct COM port is selected in the **Serial line to connect to** field.

   Note: You can check which port the USB cable is using with the **Vaisala USB Instrument Finder** program that has been installed in the Windows Start menu.
4. Check that the other serial settings are correct for your connection, and change if necessary. **Flow control** should be set to **None** unless you have a reason to change it.
5. Click the **Open** button to open the connection window and start using the serial line.

NOTE If PuTTY is unable to open the serial port you selected, it will show you an error message instead. If this happens, restart PuTTY and check the settings.

6. You may need to adjust the **Local echo** setting in the **Terminal** category to see what you are typing on the serial line. You must enable either local echo (on the terminal side) or remote echo (on the transmitter side, adjustable using the **ECHO** command).

   To access the configuration screen while a session is running, click the right mouse button over the session window, and select **Change Settings...** from the pop-up menu.

AKRIBIS · www.akribis.info · contacto@akribis.info

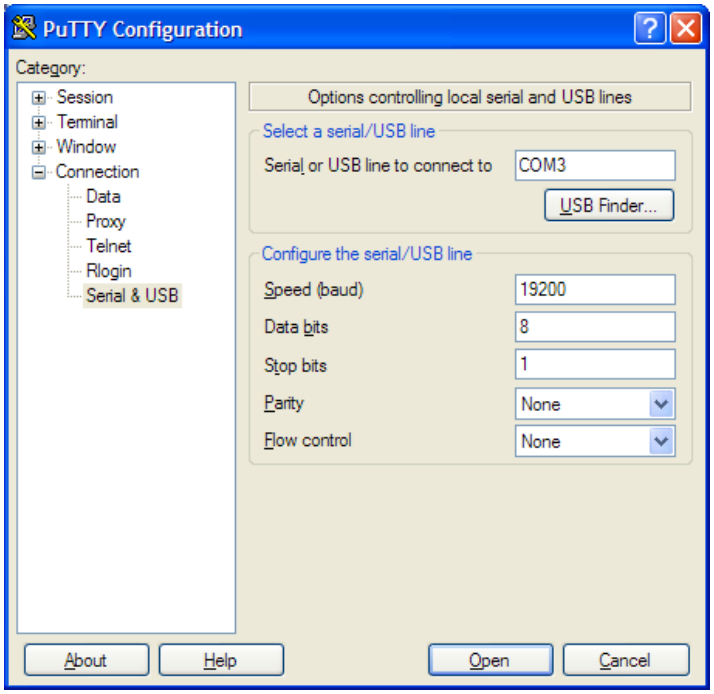

0807-004

Figure 29 PuTTY Terminal Application

AKRIBIS · www.akribis.info · contacto@akribis.info

List of Serial Commands

Some commands, such as **RSEL**, are not available if the required feature is not present on the transmitter, or the command is not relevant.

All commands can be issued either in uppercase or lowercase. In the command examples, the keyboard input by the user is in **bold** type.

The notation <cr> refers to pressing the carriage return (**Enter**) key on your computer keyboard. Enter a <cr> to clear the command buffer before starting to enter commands.

Table 7 Basic Serial Commands

Command	Description
?	Show transmitter information.
CALCS	Show all measured and calculated parameters.
ECHO	Show or set remote echo mode.
ENV	Show or set environmental parameters.
ERRT	Show error table.
ERRS	Show currently active errors.
FORM [modifier string]	Show or set output format.
HELP	Show list of currently available serial commands.
INTV [0 ... 9999 s/min/h]	Set continuous output interval for R command.
PASS [9000]	Access advanced serial commands.
R	Start the continuous outputting.
RESET	Reset the transmitter.
S	Stop the continuous outputting.
SDELAY [0 ... 255]	Show or set serial line turnaround delay in milliseconds.
SEND	Output measurement message once.
SNUM	Show transmitter serial number.
STATUS	Show transmitter status.
UNIT [m/n]	Select metric or non-metric units.
VERS	Show transmitter firmware version.

Table 8 Advanced Serial Commands

Command	Description
AMODE	Show or set analog output mode.
AOVER	Show or set analog output overrange and clipping behavior.
ASEL	Show or set analog output parameter.
ATEST	Test analog putput.
BACNET	Show or set BACnet parameters.
CDATE	Show or set calibration date.
CRH	Calibrate and adjust RH measurement.
CT	Calibrate and adjust T measurement.
CTEXT	Show or set calibration information.
DSEL	Select parameters to display on screen.
FRESTORE	Restore transmitter to factory settings.
RMODE	Show or set relay operation mode.
RSEL	Show or set relay parameter and limits.
RTEST [open/closed]	Test relay operation.

AKRIBIS · www.akribis.info · contacto@akribis.info

Transmitter Information

Show Transmitter Information

The **?** command outputs a listing of device information.

?<cr>

Example:

```
>?
Device              : HMW93
SW version          : 1.00.0.0000
SNUM                : G5130008

HTM10 module information
Software version    : 1.00.0
SNUM                : G5130007
```

Show Transmitter Firmware Version

Use the **VERS** command to show the transmitter model and firmware version.

VERS<cr>

Example:

```
>vers
HMW93 / 1.00.0
```

Show Transmitter Serial Number

Use the **SNUM** command to show the transmitter serial number.

SNUM<cr>

Example:

```
>snum
Serial number       : G5130008
```


AKRIBIS · www.akribis.info · contacto@akribis.info

Show Transmitter Status

Use the **STATUS** command to view detailed information on transmitter model and configuration.

STATUS [*function*]<cr>

where

Function = Optional switch to display a more detailed status for BACnet or Modbus protocol (available on transmitter models with digital output). Available switches are `-bacnet` and `-modbus`.

Example (display detailed BACnet status):

```
>status -bacnet
* BACnet module (BACNET) *
BACnet protocol     : active
MAC                 : 0 (00h)
Device Instance     : 6 (00000006h)
Name                : NOT_SET
Location            : Location
Description         : Description
MAX_MASTER          : 127 (7Fh)
Node type           : Master
Baud setting        : Auto
Current baudrate    : 19200 8N1
Baudrate locked     : No
Baud detection interval: 10 s
DCC                 : Communication enabled
Valid frames        : 0
Invalid frames      : 0
Unwanted frames     : 0
Lost tokens         : 0
Failed TX           : 0
```


AKRIBIS · www.akribis.info · contacto@akribis.info

Example (display full status):

```
>status
Device Name          : HMW92
Copyright            : Copyright Vaisala Oyj 2012
SW Name              : XM90
SW Model             : XM9x
SW version           : 1.0.3.3728
Serial number        : H1840005
Address              : 0

SUB FUNCTIONS

* Serial Port (COM1) *
Mode                 : STOP

* Error Manager (ERR) *
Status               : NORMAL
Active errors        : 0

* MCI communication (MCI) *
Status               : NORMAL

* Analog output 1 (AOUT1) *
Quantity             : x
Input range          : 0.000 ... 700.000 gr/lb
Output range         : 4.000 ... 20.000 mA
Output clipping      : 0.00 % (4.00 ... 20.00 mA)
Valid output range   : 5.00 % (3.20 ... 20.80 mA)
Error value          : 3.600 mA
Input now            : 17.301 gr/lb
Output now           : 4.395 mA
State                : Normal

* Analog output 2 (AOUT2) *
Quantity             : a
Input range          : 0.000 ... 10000.210 gr/ft3
Output range         : 4.000 ... 20.000 mA
Output clipping      : 0.00 % (4.00 ... 20.00 mA)
Valid output range   : 5.00 % (3.20 ... 20.80 mA)
Error value          : 3.600 mA
Input now            : 1280.323 gr/ft3
Output now           : 6.048 mA
State                : Normal

* Measurement module (HTM10) *
Status               : NORMAL
Factory date         : 20120425
```


AKRIBIS · www.akribis.info · contacto@akribis.info

Show Measured Parameters

Use the **CALCS** command to list the measurement parameters that are supported by the HMW90 series transmitters. RH and T are measured directly by the transmitter, the rest are calculated based on the measured values.

CALCS<cr>

Example:

```
>calcs
RH        - Relative Humidity
T         - Temperature
Tdf       - Dew/Frost point temperature
Td        - Dew point temperature
Tw        - Wetbulb temperature
h         - Enthalpy
x         - Mixing ratio
a         - Absolute humidity
dTd       - Dew/frostpoint depression
```

NOTE	Using this command on TMW92 and TMW93 transmitters will list all parameters, even though these transmitters only provide the temperature parameters.

Show Command Help

To see a short description of an individual command, issue the command with a question mark as a parameter.

Example:

```
>calcs ?
Display measured quantities
```


AKRIBIS · www.akribis.info · contacto@akribis.info

Show Command List

Use the **HELP** command to list the currently available serial commands. If the **PASS** command has not been used, only the basic serial commands are available.

HELP<cr>

Example (shows basic serial commands, advanced commands are not enabled here):

```
>help
?
CALCS
ECHO
ENV
ERRT
ERRS
FORM
HELP
INTV
PASS
R
RESET
SDELAY
SEND
SNUM
STATUS
UNIT
VERS
```

Measurement Settings

Set Environmental Parameters

Use the **ENV** command to set environmental parameters that affect the measurement. For HMW90 series transmitters you can set the ambient pressure value that is used for pressure compensation of calculated parameters.

ENV [*pressure*]<cr>

where

pressure = Ambient pressure in hPa.

Example:

```
>env 1013.3
Pressure (hPa)      : 1013.3
```


AKRIBIS · www.akribis.info · contacto@akribis.info

Select Units

Use the **UNIT** command to select metric or non-metric output units. Only affects data shown on the display and service port, has no effect on the analog and digital outputs. This command is not available on the digital output models (for example, HMW95).

UNIT [*x*]<cr>

where

x = Selects the unit type to output:
m = metric units, for example, Celsius
n = non-metric units, for example, Fahrenheit

Example:

```
>unit m
Unit                : Metric
```

Analog Output Settings

NOTE	If you want to change analog output settings, you must set the transmitter's configuration DIP switch 8 to position **Custom**. If the switch is set to **DIP**, the settings are view-only.

NOTE	Commands for configuring analog outputs are not available on digital output models (for example, HMW95).

Set Analog Output Mode

Use the **AMODE** command to set the analog output mode and error level. Note that you cannot change between analog output types, for example, from voltage to current output.

AMODE [*channel lo_value hi_value error_value*]<cr>

where

channel = Analog output channel, 1 or 2.
lo_value = Low limit of the channel.
hi_value = High limit of the channel.
error_value = Error value of the channel.

Example (show current configuration):

```
>pass 9000
>amode
Aout 1 range ( V)   : 0.00 ... 5.00 (error: 5.50)
```


AKRIBIS · www.akribis.info · contacto@akribis.info

```
Aout 2 range ( V)   : 0.00 ... 5.00 (error: 5.50)
```

Example (set channel 1 to 0 ... 1 V output, with error level at 2 V):

```
>amode 1 0 1 2
Aout 1 range ( V)   : 0.00 ... 1.00 (error: 2.00)
```

Set Analog Output Scaling

Use the **ASEL** command to select the output parameter and scaling for analog output channels.

ASEL [*channel parameter lo_value hi_value*]<cr>

where

channel = Analog output channel, 1 or 2.
parameter = Parameter that is output on the channel. Available parameters are:

RH	relative humidity
T	temperature
Tdf	dew/frost point temperature
Td	dew point temperature
Tw	wetbulb temperature
h	enthalpy
x	mixing ratio
a	absolute humidity
dTd	dew/frost point depression

lo_value = Low limit of the scaling, in the units of the selected parameter.
hi_value = High limit of the scaling in the units of the selected parameter.

Example (set channel 1 to output dewpoint, in the range -10 ... 20 °C):

```
>pass 9000
>asel 1 TD -10 20
Aout 1 quantity     : Td (-10.00 ... 20.00 'C)
```


AKRIBIS · www.akribis.info · contacto@akribis.info

Set Output Clipping and Error Limit

Use the **AOVER** command to define the behavior of the analog outputs when the measured value is outside the scaled output range.

AOVER [*channel clip% valid%*]<cr>

where

channel = Analog output channel, 1 or 2.
clip% = Output margin (%) at which the output is clipped. Range 0 ... 20, default is 0.
valid% = Output margin (%) at which the output of the channel goes into the error state. Range 0 ... 20, default is 5.

The error state is defined using the **AMODE** command, see section Set Analog Output Mode on page 46.

NOTE	These settings have no effect on the measurements shown on the display. The display will always show the currently measured values, even outside the scaled output range, as long as the measurement is still functioning.

For example, first check the analog output settings using **ASEL**, **AMODE**, and **AOVER** commands:

```
>pass 9000
>asel
Aout 1 quantity     : RH (0.00 ... 100.00 %)
Aout 2 quantity     : T (-5.00 ... 55.00 'C)

>amode
Aout 1 range ( V)   : 1.00 ... 5.00 (error: 6.00)
Aout 2 range ( V)   : 1.00 ... 5.00 (error: 6.00)

>aover
Aout 1 clipping      : 0.00 %
Aout 1 error limit   : 5.00 %
Aout 2 clipping      : 0.00 %
Aout 2 error limit   : 5.00 %
```

The parameter for channel 2 is T, with standard output range 1 ... 5 V and scaling -5 ... 55 °C. Error state is 6 V, which is set when the measured value is 5% outside the scaled output range.

Now give the following **AOVER** command:

```
>aover 2 10.0 20.0
Aout 2 clipping      : 10.00 %
Aout 2 error limit   : 20.00 %
```


AKRIBIS · www.akribis.info · contacto@akribis.info

Channel 2 now behaves like this:

- Clipping is now set to 10%, meaning the output is allowed to vary between 0.6 ... 5.4 V. The channel will output the measurement for -11 ... 61 °C, but range 1 ... 5 V remains scaled to show -5 ... 55 °C.
- Error limit is 20%, which means channel 2 will show the error state (6 V) when the measured value is 20% outside the scaled output range. With the settings above, this will happen if the measured temperature is outside range -17 ... 67 °C.
- The output will never actually be between 5.4 and 6.0 V because of clipping.

Display Settings

Select Parameters to Display

Use the **DSEL** command to select the parameters that are displayed on the transmitter screen. You can select parameters by abbreviation, or select same parameters as are assigned to the analog outputs. If only one parameter is selected, it is shown vertically centered on the transmitter screen.

DSEL [*Q1 Q2 Q3*]<cr>

where

Q1 = First parameter to show on the screen. Available parameters are:

out1	Same parameter as analog output channel 1
out2	Same parameter as analog output channel 2
RH	relative humidity
T	temperature
Tdf	dew/frost point temperature
Td	dew point temperature
Tw	wetbulb temperature
h	enthalpy
x	mixing ratio
a	absolute humidity
dTd	dew/frost point depression

Q2 = Second parameter to show on the screen. Available parameters are the same as for Q1.

Q3 = Third parameter to show on the screen. Available parameters are the same as for Q1.

AKRIBIS · www.akribis.info · contacto@akribis.info

Example (show currently displayed parameters):

```
>pass 9000
>dsel
Quant 1              : T
Quant 2              : RH
Quant 3              : Disabled
```

Example (change display to only show RH):

```
>dsel RH
OK
```

Example (change display to show same parameters as are assigned to analog output channels):

```
>dsel out1 out2
OK
```

Serial Line Output Commands

Start Measurement Output

Use the **R** command to start the continuous outputting of measurement values as an ASCII text string to the serial line. The format of the measurement message is set with the **FORM** command.

R<cr>

Example (measurement message in default format):

```
>r
RH = 21.71 %RH  T = 23.13 'C
RH = 21.72 %RH  T = 23.12 'C
RH = 21.77 %RH  T = 23.12 'C
RH = 21.77 %RH  T = 23.12 'C
...
```

Outputting the results continues in intervals issued with the command **INTV**. You can stop the output with the **S** command. Since the interface is half-duplex, you must enter the commands when the transmitter is not outputting.

Stop Measurement Output

You can stop the measurement output with the **S** command:

S<cr>

AKRIBIS · www.akribis.info · contacto@akribis.info

Output a Reading Once

Use the **SEND** command to output a single measurement message.

SEND<cr>

Example:

```
>send
RH = 21.72 %RH  T = 23.12 'C
```

Set Output Interval

Use the **INTV** command to change the output interval of the automatically repeating measurement messages. The measurement messages are repeated in the RUN mode, or after the **R** command has been given.

INTV [*n xxx*]<cr>

where

n	=	time interval, range 0 ... 9999.
xxx	=	time unit = "S", "MIN", or "H"

The shortest output interval (with n = 0) outputs the measurement messages as quickly as the transmitter produces them, without additional delay.

Example:

```
>intv 1 min
Output interval     : 1 min
```


AKRIBIS · www.akribis.info · contacto@akribis.info

Set Output Format

Use the serial line command **FORM** to change the measurement message sent by the transmitter on the service port. You can freely define the output message to include the desired parameters, formatting options, text strings, and additional fields.

FORM [*modifier string*]<cr>

where

modifier string = String of parameters and modifiers that defines the output format, length 1 ... 150 characters. Maximum length may be shorter when text strings are used. See Table 9 and Table 10 on page 53, and examples below.

Command to set default format:

>**form /**

Example of default output:

```
RH =  5.17 %RH  T = 24.33 'C
RH =  5.17 %RH  T = 24.33 'C
RH =  5.18 %RH  T = 24.33 'C
RH =  5.18 %RH  T = 24.33 'C
...
```

Command to set output format as Tdf and T with Modulus-256 checksum:

>**form "Tdf =" U3 4.2 tdf " T =" U3 3.2 t CS2 \r \n**

Output example:

```
Tdf = -15.72 'C  T = 24.38 'C C9
Tdf = -15.71 'C  T = 24.38 'C C8
Tdf = -15.71 'C  T = 24.38 'C C8
Tdf = -15.69 'C  T = 24.38 'C CF
...
```

Command to set output format as Tdf and T, with **start of text** (ASCII character 002) and **end of text** (003) ASCII codes, and without line feed and carriage return at the end:

>**form #002 "Tdf =" U3 3.2 tdf " T =" U3 3.2 t #003**

Output example (ASCII codes not visible here):

```
Tdf =-15.14 'C  T = 24.40 'CTdf =-15.14 'C  T = 24.40 'CTdf
=-15.14 'C  T = 24.40 'CTdf =-15.14 'C  T = 24.40 'CTdf =-
15.13 'C  T = 24.40 'CTdf =-15.13 'C  T = 24.40 'C ...
```


AKRIBIS · www.akribis.info · contacto@akribis.info

Table 9 FORM Command Parameters

Measured Parameter	Abbreviation in FORM Command
Relative humidity	RH
Temperature	T
Dew/frost point temperature	Tdf
Dewpoint temperature	Td
Wetbulb temperature	Tw
Enthalpy	h
Mixing ratio	x
Absolute humidity	a
Dew/frost point depression	dTd

Table 10 FORM Command Modifiers

Modifier	Description
x.y	Length modifier (number of digits and decimal places)
#t	Tabulator
#r	Carriage-return
#n	Line feed
""	String constant, length 1 ... 15 characters
#xxx	ASCII code value (decimal) of a special character; for example, **#027** for ESC
Ux	Shows the name of the measurement unit using “x” number of characters. For example, **U3** shows the name of the measurement unit with three characters
CS2	Modulus-256 checksum of message sent so far, ASCII encoded hexadecimal notation
CS4	Modulus-65536 checksum of message sent so far, ASCII encoded hexadecimal notation
CSX	NMEA xor-checksum of message sent so far, ASCII encoded hexadecimal notation

NOTE When entering modifiers, you can also use the backslash character “\” instead of the hash “#”.

Serial Line Settings

Set Remote Echo

Use the **ECHO** command to enable or disable remote echo by the transmitter.

ECHO [*on/off*]<cr>

Example:

```
>echo on
Echo                    : ON
```


AKRIBIS · www.akribis.info · contacto@akribis.info

Set Serial Line Turnaround Delay

With the **SDELAY** command you can set the turnaround delay of the transmitter (time waited before replying to an incoming message) or view the currently set delay value.

SDELAY [*delay*]<cr>

where

delay = Turnaround delay in milliseconds, range 1 … 1000. Default is 1.

Example:

```
>sdelay 5
COM1 transmit delay : 5
```

Relay Configuration in Custom Mode

NOTE	Relay is included on HMW93 transmitters only.

Additional configuration options are available when relay functionality is configured via software. The configuration is done using the **RMODE** and **RSEL** commands. For examples, see section Relay Configuration Examples on page 56.

Set Relay Mode

Use the **RMODE** command to show or set the relay activation mode.

RMODE [*mode*]<cr>

where

mode = Activation mode of the relay. Options are:
None (relay is disabled, always open)
Lo_active (relay closed when below setpoint)
Hi_active (relay closed when above setpoint)
Fault (relay closed when transmitter in error state)
Not_fault (relay closed when transmitter not in error state)

Example (set relay to Lo_active mode):

```
>pass 9000
>rmode lo_active
Relay mode          : Lo_Active
```


AKRIBIS · www.akribis.info · contacto@akribis.info

Set Relay Parameter and Limits

Use the **RSEL** command to show or set the parameter that controls the relay, and the limits that are applied.

RSEL [*parameter lo_value hi_value*]<cr>

where

parameter = Parameter that controls the relay. Available parameters are:

RH	relative humidity
T	temperature
Tdf	dew/frost point temperature
Td	dew point temperature
Tw	wetbulb temperature
h	enthalpy
x	mixing ratio
a	absolute humidity
dTd	dew/frost point depression
Disabled	no parameter, relay disabled

lo_value = Low limit of relay activation.
hi_value = High limit of relay activation.

Example (show current settings):

```
>pass 9000
>rsel
Relay configuration   : RH (88.00 ... 92.00 %)
```

Example (set temperature as relay parameter, low limit 25, high limit 30):

```
>rsel t 25 30
Relay configuration   : T (25.00 ... 30.00 'C)
```


AKRIBIS · www.akribis.info · contacto@akribis.info

Relay Configuration Examples

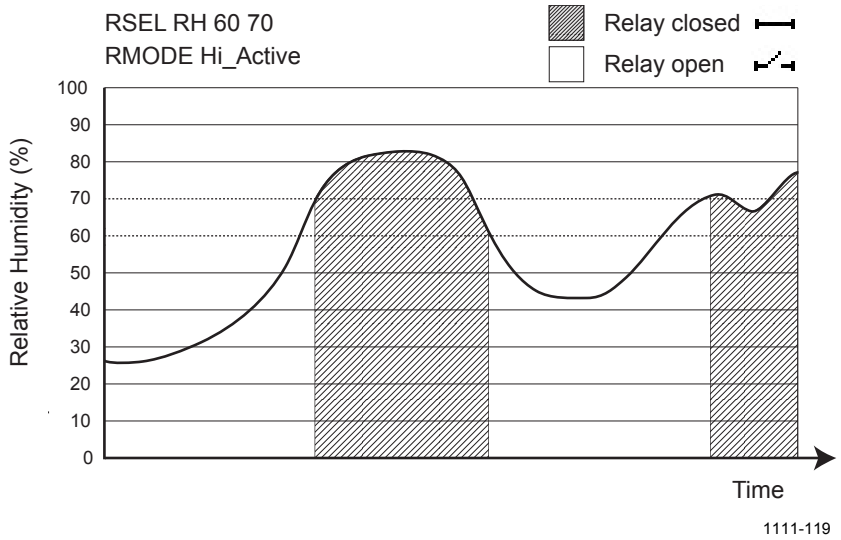

Figure 30 Relay Hi_Active in Custom Mode (HMW93)

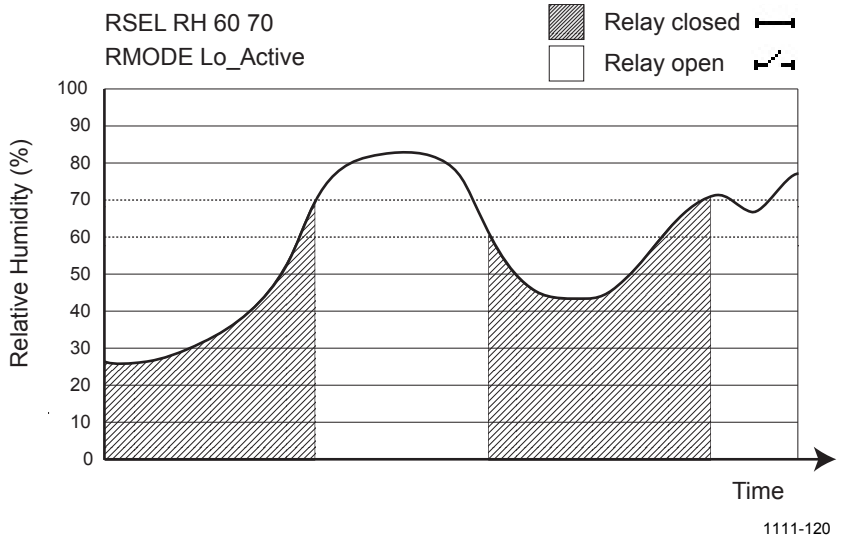

Figure 31 Relay Lo_active in Custom Mode (HMW93)

AKRIBIS · www.akribis.info · contacto@akribis.info

Calibration and Adjustment Commands

The following sections describe the calibration and adjustment commands of the HMW90 series. For general information on performing calibration and adjustment on the serial line, see section Adjustment Using a Computer on page 68.

The 1-point humidity adjustment of the HMW90 series adjusts both offset and gain, depending on the adjustment condition. In a dry condition (for example, 11 %RH), offset is adjusted more than gain.

NOTE The 1-point humidity adjustment requires that the target condition is at least 50% of the currently measured value. This prevents the user from making excessive corrections that are very unlikely to be needed. However, if you feel that you may have done an incorrect adjustment, you can easily remove the adjustment using the **CRH RESET** command.

NOTE You must enable advanced serial commands using the **PASS 9000** command before using the calibration and adjustment commands.

Adjust Humidity Measurement

Use the **CRH** command to perform a humidity adjustment of the relative humidity (RH) measurement. You can do a 1-point or a 2-point adjustment, or clear the adjustment information from the HTM10 module. Note that the factory adjustment will remain intact when user adjustment is cleared.

NOTE The **CRH** command does nothing on the TMW92 and TMW93 transmitters.

Show Current RH Adjustment

CRH<cr>

Example (showing default offset and gain):

```
>pass 9000
>crh
RH Gain              : 1.000
RH Offset            : 0.000
```


AKRIBIS · www.akribis.info · contacto@akribis.info

1-point Adjustment of RH Measurement

The 1-point adjustment adjusts both offset and gain depending on the adjustment condition. The same type of adjustment is done when turning the RH trimmer.

Place the transmitter in the reference condition and allow it to stabilize before entering the adjustment.

CRH [*ONE*] [*x*]<cr>

where

x = The reference humidity condition (%RH) that the transmitter should be showing.

Example:

```
>pass 9000
>crh one 11
OK
```

2-point Adjustment of RH Measurement

CRH [*LO* | *HI*] [*x*]<cr>

where

LO = Adjustment point at the dry end (low RH).

HI = Adjustment point at the wet end (high RH). The difference between the two points should be at least 30 %RH.

x = The reference humidity condition (%RH) that the transmitter should be showing.

The 2-point correction is not applied immediately – you must use the **CRH SAVE** command to store your adjustment to the HTM10 module. If you have entered user adjustments using the CRH command but do not wish to commit them, use the **CRH CANCEL** command.

CRH [*SAVE* | *CANCEL*]<cr>

Example (two point adjustment, low point 11 %RH and high point 75 %RH):

```
>pass 9000
>crh lo 11
OK
>crh hi 75
OK
>crh save
OK
```


AKRIBIS · www.akribis.info · contacto@akribis.info

Clear User Adjustment of RH Measurement

CRH [*RESET*]<cr>

Example:

```
>pass 9000
>crh reset
OK
```

Adjust Temperature Measurement

Use the **CT** command to perform an adjustment of the temperature measurement. You can do a 1-point adjustment or clear the adjustment information from the HTM10 module. Note that the factory adjustment will remain intact when user adjustment is cleared.

Show Current T Adjustment

CT<cr>

Example (showing default temperature offset):

```
>pass 9000
>ct
Temperature offset  : 0.000
```

1-point Adjustment of T Measurement

Place the transmitter in the reference condition and allow it to stabilize before entering the adjustment.

CT [*x*]<cr>

where

x = The reference temperature (in degrees Celsius) that the transmitter should be showing.

Example:

```
>pass 9000
>ct 23
OK
```


AKRIBIS · www.akribis.info · contacto@akribis.info

Clear User Adjustment of T Measurement

CT [*RESET*]<cr>

Example:

```
>pass 9000
>ct reset
OK
```

Enter Calibration and Adjustment Information

Use the **CTEXT** command to store a text string that describes the calibration and/or adjustment. To enter a text string with spaces, enclose the string in quotation marks. Use the **CDATE** to store the date.

CTEXT [*text*]<cr>

CDATE [*YYYY-MM-DD*]<cr>

Examples:

```
>pass 9000
>ctext "adjusted rhlab/Tech021"
"adjusted rhlab/Tech021"

>cdate 2011-12-08
Calibration date    : 2011-12-08
```


AKRIBIS · www.akribis.info · contacto@akribis.info

Testing Commands

Test Analog Outputs

Use the **ATEST** command to force the analog outputs to the given value. Before using the **ATEST** command it is useful to give the **AMODE** command to verify the output mode of the channels.

ATEST [*channel value*]<cr>

where

channel = Number of analog output channel to be tested (1 or 2).
value = Voltage or current value to set the channel to. Unit is determined according to output type (V or mA).

The value you set may not be achievable by the transmitter. Voltage output can go as high as 12 V, and current output can go up to 25 mA. Also, current output cannot go down to zero.

After testing the output, give the **ATEST** command with the channel number to exit the test mode.

Example (verify output mode of the channels):

```
>pass 9000
>amode
Aout 1 range ( V)   : 0.00 ... 5.00 (error: 5.50)
Aout 2 range ( V)   : 0.00 ... 5.00 (error: 5.50)
```

Example (set channel 1 to 6 V):

```
>atest 1 6
Aout1 ( V)          : 6.000
```

Example (end test mode for channel 1, resume normal output):

```
>atest 1
Aout1 test mode disabled.
```


AKRIBIS · www.akribis.info · contacto@akribis.info

Test Relay Operation

Use the command **RTEST** to test the operation of the relay. Issue the command without parameters to end the relay test.

RTEST [*state*]<cr>

where

state = State of the relay contacts. Options are:
open (open the relay contacts)
closed (close the relay contacts)

Example (close relay contacts):

```
>pass 9000
>rtest closed
Relay test mode     : Closed
```

Example (exit relay test mode, resume normal operation):

```
>rtest
Relay test mode     : Canceled
```

Other Commands

Enable Advanced Serial Commands

Use the **PASS** command to enable the advanced serial commands.

PASS [*passcode*]<cr>

where

passcode = Passcode to enable advanced commands is **9000**.

Example:

```
>pass 9000
```

Reset Transmitter

Use the **RESET** command to reset the transmitter.

RESET<cr>

Example:

```
>reset
Resetting
HMW93 / 1.00.00.0000 / XM90
>
```


AKRIBIS · www.akribis.info · contacto@akribis.info

Set BACnet Parameters

Use the **BACNET** command to show or set some of the transmitter's BACnet parameters. You can also use the **BACNET** command to reinitialize the BACnet stack of the transmitter without having to reset or power cycle the transmitter.

BACNET [*parameter_name* [*parameter_value*]] [*reinit*]<cr>

where

parameter_name = Name of the BACnet parameter to change. Available parameters are:

Instance: BACnet instance number. Unsigned value in range 0 ... 4194302.

Name: BACnet Object_Name shown in the Device object. String value, no spaces.

Description: BACnet Description shown in the Device object. String value, no spaces.

Location: BACnet Location shown in the Device object. String value, no spaces.

Password: Password used in ReinitializeDevice service. String value, no spaces.

MAX_MASTER: Max_Master parameter in Device object. Unsigned value, range 1 ... 127.

parameter_value = New value of the parameter. See descriptions above for allowed values.

reinit = Reinitializes the BACnet stack. Must be given as the only argument for the **BACNET** command.

Example (show BACnet parameters):

```
>bacnet
Instance            : 6 (00000006h)
Name                : HMW95_H2330001
Location            : Location
Description         : Description
Password            : 1234
MAX_MASTER          : 127 (007Fh)
COV_Interval        : 0
Autobaud_Interval   : 10
```


AKRIBIS · www.akribis.info · contacto@akribis.info

Example (change description to **main_hall**, and reinitialize the BACnet stack):

```
>bacnet description main_hall
Description         : main_hall
>bacnet reinit
Reinitialize signaled to BACnet stack.
```


AKRIBIS · www.akribis.info · contacto@akribis.info

CHAPTER 5
MAINTENANCE

This chapter provides information that is needed in basic maintenance of the HMW90 series.

Periodic Maintenance

Cleaning

The body of the transmitter can be cleaned by wiping with a moistened lint-free cloth. Do not use cleaning agents or solvents, or blow pressurized air into the transmitter housing.

Do not attempt to clean contaminated HTM10 modules and HUMICAP® sensors. Dirty modules should always be replaced with new calibrated modules.

Calibration and Adjustment

HMW90 series transmitters are fully calibrated as shipped from factory. HMW90 series transmitters have a display that makes it easy to compare the measured readings against any portable calibration reference. Note that depending on the ordered configuration, the display may be hidden under the sliding cover.

For adjustment of the measurement, you have the following options:

- 1-point adjustment using the trimmers under the sliding cover. See section Adjustment Using Display and Trimmers on page 66.
- 1-point or 2-point adjustment using the service port. See the following sections:
    - Adjustment Using an HM70 on page 67.
    - Adjustment Using a Computer on page 68.

If adjustment is not enough to restore the measurement accuracy of the transmitter, you can also replace the measurement module. See section Replacing the Measurement Module on page 69.

AKRIBIS · www.akribis.info · contacto@akribis.info

The adjustment of temperature measurement is always a simple 1-point offset correction.

The 1-point humidity adjustment of the HMW90 series adjusts both offset and gain, depending on the adjustment condition. In a dry condition (for example, 11 %RH), offset is adjusted more than gain.

NOTE	The 1-point humidity adjustment requires that the target condition is at least 50% of the currently measured value. This prevents the user from making excessive corrections that are very unlikely to be needed. However, if you feel that you may have done an incorrect adjustment, you can easily remove the adjustment using the HM70 or the **CRH RESET** command on the serial line.

NOTE	Only T adjustment is available on the TMW92 and TMW93 transmitters.

Adjustment Using Display and Trimmers

CAUTION	The trimmers only turn 135 degrees each way, less than half a rotation. Do not force the trimmer past the stopping point. If you wish to apply a greater correction than allowed by the trimmer in a single adjustment, simply adjust the transmitter again. Corrections applied using the trimmers are cumulative.

NOTE	User calibration settings (adjustment by trimmers or service port) are stored in the HTM10 module. If you replace the module, there is no need to undo previous adjustments.

1. To enter the adjustment screen, open the slide and rotate the RH or T trimmer slightly during normal measurement. If the trimmer is not centered, you see the trimmer centering screen first. Simply turn the trimmer to the center and wait for the progress bar to complete.

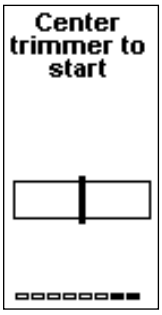

1111-075

Figure 32 Trimmer Centering Screen

AKRIBIS · www.akribis.info · contacto@akribis.info

2. In the adjustment screen, turn the trimmer to set the desired correction. To commit the change, stop turning the trimmer and wait.

1111-076

Figure 33 Trimmer Centering Screen

3. If you wish to apply a greater correction than allowed by the trimmer in a single adjustment, re-enter the adjustment screen and apply a new correction. Corrections applied using the trimmers are cumulative.

Adjustment Using an HM70

1. Connect the HMW90 series transmitter to the HM70 hand-held meter using the connection cable (Vaisala order code 219980).
2. Depending on the connected devices, you may be prompted by the HM70 meter to check the currently applied environment settings. Check the settings when prompted.
3. In the **Functions** menu of the HM70, select **Calibrate XMW9x** and press **Start**.
4. Confirm **Yes**. Confirm the automatic power off notification with **Ok**.
5. Select parameter for adjustment, T or RH.
6. Screen shows the measured values and their difference. Press **Adjust** to select the Adjustment mode.
7. Select the desired adjustment type using arrow buttons and press **Select**:
   - **To same as reference**: Adjusts the measurement of the HMW90 transmitter to the same reading as the reference that is connected to the other port. When the parameter being adjusted is RH, both offset and gain are adjusted, depending on the adjustment condition (same as when turning the RH trimmer). This option is not available if no reference is connected to the HM70.
   - **1-point adjustment**: Adjusts the measurement of the HMW90 to a reference value that you specify. When the parameter being adjusted is RH, both offset and gain are adjusted, depending on the adjustment condition (same as when turning the

AKRIBIS · www.akribis.info · contacto@akribis.info

RH trimmer). Follow the instructions from the HM70 when using this option.

- **2-point adjustment**: Adjusts the measurement of the HMW90 at two points to reference values that you specify. This option is not available when adjusting temperature (T).
- **Revert factory calib.**: This option removes the currently applied user adjustment from the HTM10 module. Only the adjustment for the selected parameter is removed (RH or T).

8. Complete the selected adjustment by following the instructions from the HM70.

Adjustment Using a Computer

For more detailed instructions on using the Vaisala USB cable and a terminal application, see section Connecting With a Computer on page 37.

For a description of the serial commands, see section Calibration and Adjustment Commands on page 57.

1. Connect the HMW90 series transmitter to your computer using the Vaisala USB cable (order code 219690).
2. Start a terminal application and open a new session to the service port of the transmitter. The serial line settings are 19200, N, 8, 1.
3. Before changing the adjustment, issue the following commands to see the transmitter's current adjustment information:

```
pass 9000
crh
ct
ctext
cdate
```

4. Place the entire transmitter in the desired reference condition and allow the measurement to stabilize. Follow the stabilization from the serial line (output from the **R** command) or the display.
5. You can now use the **CRH** and **CT** commands to adjust the transmitter's RH and T measurement. Refer to the command descriptions for the available options.
6. After performing the adjustment, verify from the serial line or the display that the measurement has been corrected.
7. After completing the adjustments, you can enter a descriptive text string in the transmitter's memory using the **CTEXT** command, and note the adjustment date using the **CDATE** command.

AKRIBIS · www.akribis.info · contacto@akribis.info

Repair Maintenance

Replacing the Measurement Module

If you cannot restore the measurement accuracy of the transmitter by calibration and adjustment, you can replace the measurement module inside the transmitter. The measurement module is the small separate component board that is connected to the bottom of the component board; see Figure 4 on page 16.

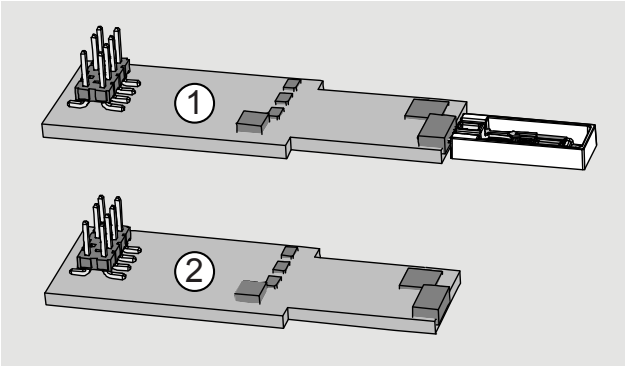

1203-034

Figure 34 HTM10 and TM10 Modules

where

1 = HTM10 module that includes a HUMICAP® sensor for humidity measurement and a digital temperature sensor.
2 = TM10 module with a digital temperature sensor.

Replace the module in your transmitter with the same type as used originally. Replacing a TM10 module with a HTM10 module does not turn a TMW transmitter (temperature only) into a HMW type (humidity and temperature) transmitter.

NOTE	User calibration settings (adjustment by trimmers or service port) are stored in the module. If you replace the module, you do not need to undo the previously applied correction.

CAUTION	Handle the HTM10 module carefully. When reinstalling the transmitter body to the mounting base, avoid touching the module or the HUMICAP® sensor.

AKRIBIS · www.akribis.info · contacto@akribis.info

To replace the module:

1. Disconnect the transmitter body from the mounting base.
2. With your fingers, push apart the two plastic holders that hold the module. Pull out the module. Keep the module straight while pulling it out, otherwise the pins may twist in the connector and damage it.

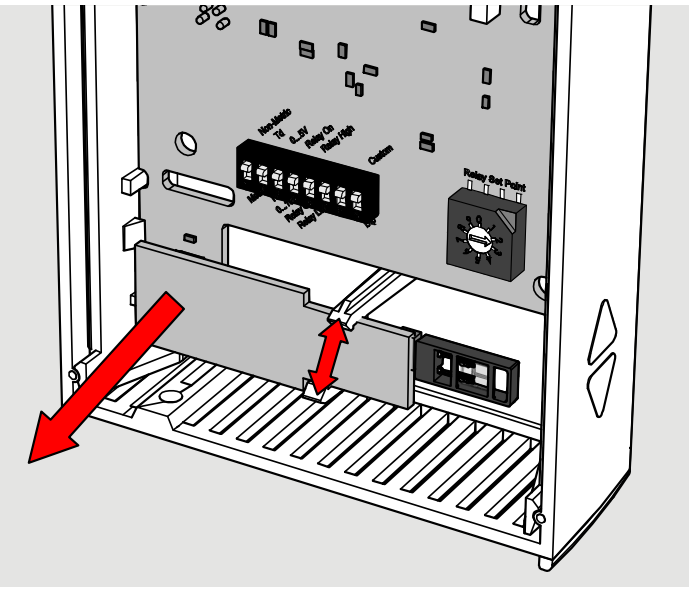

Figure 35 Replacing the HTM10 Module (HMW93)

3. Take the new module and align the pins to the connector on the transmitter's component board.
4. Push down on the module so that the plastic holders clip into place. Try not to tilt the module, so that the pins will meet the connector straight on.
5. Reconnect the transmitter to the mounting base.
6. Verify that there are no errors when the transmitter starts up. If you see the errors **HTM10 01** or **HTM10 02** on the screen, it is likely that the module is not seated properly in the connector. In that case, disconnect the transmitter body and try again.

AKRIBIS · www.akribis.info · contacto@akribis.info

CHAPTER 6
TROUBLESHOOTING

This chapter describes common problems, their probable causes and remedies, and provides contact information for technical support.

Problem Situations

Table 11 Troubleshooting Table

Problem	Possible Causes and Solutions
Temperature reading shown by the transmitter is too high.	1. The transmitter may be installed in an unsuitable location, for example, near a heat source or in sunlight. See section Selecting Location on page 26. 2. Check that the transmitter is installed in proper orientation, with the arrow on the mounting base pointing up.
Relay does not seem to be working as configured.	1. Check DIP switch settings. Is the relay configured using DIP switches and rotary switch, or software? Check that the rotary switch is not between two positions. 2. Note the effect of hysteresis in DIP mode; see section Relay Configuration in DIP Mode on page 21. 3. Connect to the service port using a computer and use the **STATUS** command to view the current relay settings. 4. Use the **RTEST** command to test that the relay is working properly.
Transmitter does not recognize a valid serial command, responds with message `FAIL 1: Unknown command`	1. The command may be one of the advanced commands, and you have not enabled them using the **PASS 9000** command. 2. If you are using remote echo on the transmitter, disable it with the **ECHO OFF** command to avoid collisions. 3. There may be an intermittent connection problem between the transmitter and your terminal. Issue the command again.

AKRIBIS · www.akribis.info · contacto@akribis.info

Error Messages

Table 12 Error Messages

Error Text on Display	Error ID on Serial Line	Possible Cause	Remedy
HTM10 01 HTM10 02	23 41	Communication problem with HTM10 module.	Check that the HTM10 module sits firmly in place. Remove and reconnect.
HTM10 04	21	Problem with humidity measurement.	- Check for missing or damaged HUMICAP® sensor on the HTM10 module. - Check for condensation on the HUMICAP® sensor. Wait for the sensor to dry out.
HTM10 03	4	Internal problem with HTM10 module.	- Restart the transmitter. - Replace the module if unable to remove the problem.
HTM10 05	22		
HTM10 06	42		
Internal 1	1	Internal problem with the transmitter.	- Restart the transmitter. - Restore the factory settings using service port or DIP switches if reset does not help.
Internal 2	2		
Internal 3	3		
Internal 4	43		

AKRIBIS · www.akribis.info · contacto@akribis.info

Viewing Error Messages on Serial Line

View Currently Active Errors

Use the **ERRS** command to view currently active errors on the serial line:

ERRS<cr>

Example:

```
>errs
NO ERRORS
```

View Error Table

Use the **ERRT** command to view the table of possible transmitter errors. The table includes error ID, error count since last reset, level, current state, and error text.

Critical errors require a transmitter reset to recover. Other errors may be recoverable if their cause is removed.

ERRT<cr>

Example:

```
>errt
Id:    N:     Level:State: Error text
 1:    0:  CRITICAL:OFF: FLASH memory corrupted
 2:    0:  CRITICAL:OFF: Parameter read (using defaults)
 3:    0:  CRITICAL:OFF: Parameter write
 4:    0:  CRITICAL:OFF: HTM10 03 FLASH Corrupted
21:    0:     ERROR:OFF: HTM10 04 RH measurement
22:    0:     ERROR:OFF: HTM10 05 T measurement
23:    0:     ERROR:OFF: HTM10 01 Continuous communication failure
41:    0:   WARNING:OFF: HTM10 02 Single Communication failure
42:    0:   WARNING:OFF: HTM10 06 Device Descriptor match
43:    0:   WARNING:OFF: Factory parameter memory not consistent
```


AKRIBIS · www.akribis.info · contacto@akribis.info

Error State

If there are any active “critical” or “error” level errors active in the transmitter, both analog outputs are set into a defined error level instead of the measured result. The error level depends on the output type:

- For 0 ... 5 V output, the default error level is **5.5 V**
- For 0 ... 10 V output, the default error level is **11 V**
- For 4 ... 20 mA output, the default error level is **3.6 mA**

If all “critical” and “error” level errors are turned off (by removing their cause), transmitter resumes normal operation of analog outputs.

You can configure the error level using the **AMODE** command. See section Set Analog Output Mode on page 46.

NOTE	You can also use the **AOVER** command to configure a channel to go to the error level if the measured parameter is sufficiently far out of the measured range. See section Set Output Clipping and Error Limit on page 48.

AKRIBIS · www.akribis.info · contacto@akribis.info

Reverting to Factory Settings

HMW90 series transmitters, including factory-customized transmitters, can be reverted to their original shipping configuration using the DIP switches or the service port.

Reverting the transmitter to factory settings clears all user configuration that has been done using the service port. User-made humidity and temperature adjustments are also cleared from the HTM10 module. The factory calibration will remain.

Reverting to Factory Settings Using DIP Switches

NOTE	Factory reset functionality using DIP switches is present in transmitters with firmware version 1.0.3 or newer. The firmware version is visible on the transmitter startup screen.

1. Disconnect the transmitter cover from the mounting base.
2. Make a note of the DIP switch positions before changing anything, so you can restore the positions later.
3. Analog output models: Set the DIP switches as shown in Figure 36 below: move all switches up.

   Digital output models: Set the DIP switches in the leftmost DIP switch bank as shown in Figure 37 on page 76. Do not move the switches in the other bank.

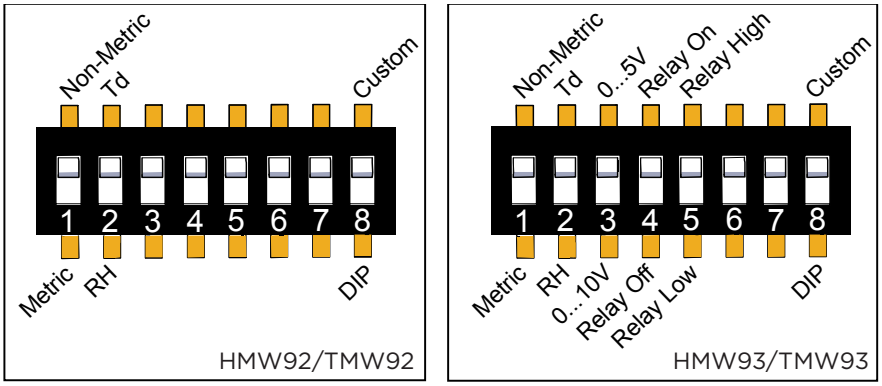

1203-018

Figure 36 DIP Switches in Factory Reset Position

AKRIBIS · www.akribis.info · contacto@akribis.info

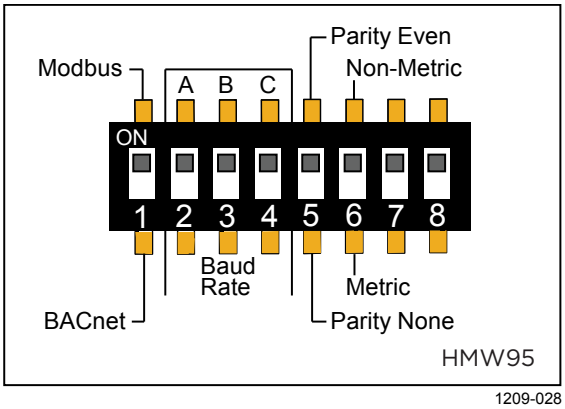

Figure 37 DIP Switches in Factory Reset Position (HMW95)

4. Reconnect the transmitter cover to the mounting base so it powers up. Check the screen after power-up: when the DIP switches are in factory reset position, you will see a notification text.
5. Disconnect the transmitter cover again.
6. Set the DIP switches to the positions they were before.
7. Reconnect the transmitter cover to the mounting base. Check the startup screens to verify the configuration.

AKRIBIS · www.akribis.info · contacto@akribis.info

Reverting to Factory Settings Using Service Port

Use the **FRESTORE** command to restore the transmitter to factory settings.

FRESTORE<cr>

NOTE	If you are restoring the factory configuration on a factory customized analog output model (HMW90), leave DIP number 8 to the **Custom** position to avoid the custom configuration from being overwritten by the default settings at transmitter reset. For more information about this, see section Changing Between DIP and Custom Configuration on page 23.

NOTE	After using the **FRESTORE** command, reset the transmitter using the **RESET** command.

Example:

```
>pass 9000
>frestore
Restoring HTM10 factory parameters
HTM10 factory parameters restored
Restoring HMW93 factory settings
72/72 parameters restored
OK
>reset
Resetting
HMW93 / 1.00.00.0000 / XM90
>
```

Technical Support

For technical questions, contact the Vaisala technical support by e-mail at helpdesk@vaisala.com. Provide at least the following supporting information:

- Name and model of the product in question.
- Serial number of the product.
- Name and location of the installation site.
- Name and contact information of a technically competent person who can provide further information on the problem.

For Vaisala Service Center contact information, see www.vaisala.com/servicecenters.

AKRIBIS · www.akribis.info · contacto@akribis.info

CHAPTER 7

TECHNICAL DATA

This chapter provides the technical data of the HMW90 series transmitters.

Specifications

Table 13 Performance

Property	Description / Value
Relative humidity	
Measurement range	0 ... 100 %RH, non-condensing
Accuracy Temperature range +10 ... +40 °C (+50 ... +104 °F) 0 ... 90 %RH 90 ... 100 %RH Temperature range -5 ... +10 °C, +40 ... + 55 °C (+23 ... +50 °F, +104 ... +131°F) 0 ... 90 %RH 90 ... 100 %RH	 ±1.7 %RH ±2.5 %RH ±3 %RH ±4 %RH
Stability in typical HVAC applications	±0.5 %RH/year
Humidity sensor	Vaisala HUMICAP® 180R
Temperature	
Measurement range	-5 ... +55 °C (+23 ... +131 ºF)
Accuracy +20 ... +30 °C (+68 ... +86 °F) +10 ... +20 °C, +30 ... +40°C (+50 ... +68 °F, +86 ... +104 °F) -5 ... +10 °C, +40...+55°C (+23 ... +50 °F, +104 ... +131 °F)	 ±0.2 °C (± 0.36 °F) ±0.3 °C (± 0.54 °F) ±0.5 °C (± 0.90 °F)
Temperature sensor	Digital temperature sensor

Table 14 Operating Environment

Property	Description / Value
Operating temperature range	-5 ... +55 °C (+23 ... +131 °F)
Storage temperature range	-30 ... +60 °C (-22 ... +140 °F)
Electromagnetic compliance	EN61326-1, Industrial Environment

AKRIBIS · www.akribis.info · contacto@akribis.info

Table 15 Inputs and Outputs

Property	Description / Value
HMW92 and TMW92	
Outputs	
HMW92	2 x 4 ... 20 mA, loop powered
TMW92	1 x 4 ... 20 mA, loop powered
Loop resistance	0 ... 600 Ω
Supply voltage	20 ... 28 VDC at 500 Ω load 10 .... 28 VDC at 0 Ω load
Isolation between output channels	500 VDC
HMW93 and TMW93	
Outputs	
HMW93	2 x 0 ... 5V, 0 ... 10 V
TMW93	1 x 0 ... 5V, 0 ... 10 V
Load resistance	10 kΩ min.
Supply voltage	18 ... 35 VDC 24 VAC ±20 % 50/60 Hz
Max. current consumption	12 mA max. with relay 25 mA
Relay	1 pc (SPST, max. 50 VDC/50 VAC, 500 mA)
3-wire installation max cable resistance	2.5 Ω at 24V supply (with 10 V output, relay not used)
HMW95	
Supply voltage	18 ... 35 VDC 24 VAC ±20 % 50/60 Hz
Current consumption (with termination)	
Average	10 mA at 24 VDC
Maximum	30 mA at 24 VDC
Power consumption	< 0.3 W
Output type	RS-485 (galvanic isolation, 1.5 kV)
RS-485 end of line termination	Enable with jumper, 120 Ω
Supported protocols	Selectable by DIP switch
BACnet MS/TP	
Operating mode	Selectable Master/Slave
Address range, master mode	0 ... 127
Address range, slave mode	128 ... 255
Modbus RTU	
Address range	0 ... 247
Service port	RS-485 line for temporary service use

AKRIBIS · www.akribis.info · contacto@akribis.info

Table 16 Mechanics

Property	Description / Value
IP class	IP30
Standard housing color	White (RAL9003*)
Optional housing colors (configurable models only)	Black (RAL9005*)
Housing material	ABS/PC, UL-V0 approved
Output connector	Screw terminals max. wire size 2 mm^2 (AWG14)
Service port connector	4-pin M8
Weight	155 g
Dimensions (h × w × d)	133 × 81 × 30

*RAL code is only indicative with potential small variations in color shade.

Spare Parts and Accessories

Information on spare parts, accessories, and calibration products is available online at www.vaisala.com and store.vaisala.com.

Table 17 HMW90 Series Spare Parts and Accessories

Description	Order Code
Humidity and Temperature Module for HMW92, HMW93, HMW95, and HMW90	HTM10SP
Temperature Module for TMW92, TMW93, and TMW90	TM10SP
Decorative cover set (10 pcs.)	236285
Connection cable for HM70 hand-held meter	219980
USB cable for computer connection	219690
Standard white sliding cover, blank	DRW237354SP
Standard white sliding cover with hole for display	DRW237339SP

AKRIBIS · www.akribis.info · contacto@akribis.info

Dimensions in mm

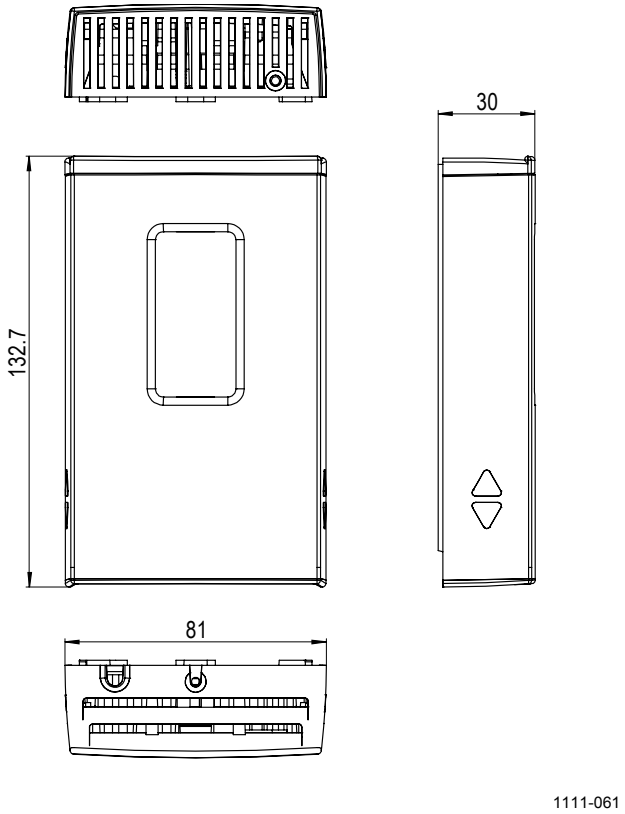

Figure 38 HMW90 Series Dimensions

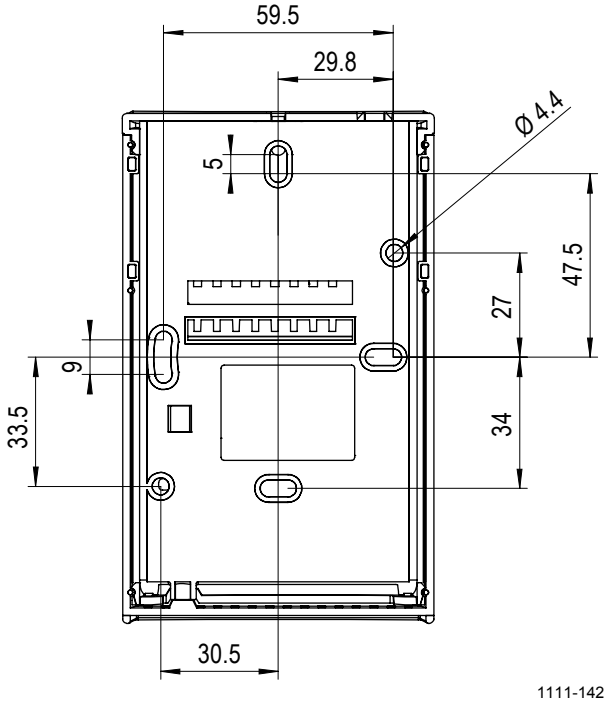

Figure 39 Dimensions of the Mounting Base

AKRIBIS · www.akribis.info · contacto@akribis.info

APPENDIX A

BACNET REFERENCE

This appendix describes the BACnet protocol implementation of the HMW90 series digital transmitters.

NOTE	For more information on BACnet, refer to addendum D of the ANSI/ASHRAE standard 135-2001: BACnet®—A Data Communication Protocol for Building Automation and Control Networks.

NOTE	Serial line settings such as baud rate are configured using DIP switches. See section Configuration of Digital Output Models on page 23.

BACnet Protocol Implementation Conformance Statement

This statement is a part of the BACnet standard and is required for its use.

Vendor Name:	Vaisala Oyj
Product Name:	XMW90
Product Model Numbers:	HMW95
Applications Software Version:	1.0.28
Firmware Version:	1.0.0.0
BACnet Protocol Revision:	Version 1, Revision 4
BACnet Standardized Device Profile (Annex L):	☐ BACnet Operator Workstation (B-OWS) ☐ BACnet Building Controller (B-BC) ☐ BACnet Advanced Application Controller (B-AAC) ☐ BACnet Application Specific Controller (B-ASC) ☑ BACnet Smart Sensor (B-SS) ☐ BACnet Smart Actuator (B-SA)
List of all BACnet Interoperability Building Blocks Supported (Annex K): See also section BIBBs Supported on page 93.	DS-RP-B, DS-RPM-B, DS-WP-B, DS-COVU-B, DM-DDB-B, DM-DOB-B, DM-DCC-B, DM-RD-B

AKRIBIS · www.akribis.info · contacto@akribis.info

Segmentation Capability	☐ Segmentation Requests Supported ☐ Segmentation Responses Supported
Standard Object Types Supported	☑ Analog Input ☐ Analog Output ☑ Analog Value ☐ Averaging ☐ Binary Input ☐ Binary Output ☐ Binary Value ☐ Calendar ☐ Command ☑ Device ☐ Event Enrollment ☐ File ☐ Group ☐ Life Safety Point ☐ Life Safety Zone ☐ Loop ☐ Multistate Input ☐ Multistate Output ☐ Multistate Value ☐ Notification Class ☐ Program ☐ Schedule ☐ Trend Log
Data Link Layer Options	☐ BACnet Internet Protocol (IP) (Annex J) ☐ BACnet IP (Annex J), Foreign Device ☐ ISO 88023, Ethernet (Clause 7) ☐ ANSI/ATA 878.1, 2.5 MB ARCNET® network (Clause 8) ☐ ANSI/ATA 878.1, RS485 ARCNET network (Clause 8), baud rates: _____ ☑ Master-Slave/Token-Passing (MS/TP) master (Clause 9), baud rates: 9600, 19200, 38400, 57600, 76800, 115200 ☑ MS/TP slave (Clause 9), baud rates: 9600, 19200, 38400, 57600, 76800, 115200 ☐ Point-To-Point, EIA 232 (Clause 10), baud rates: _____ ☐ Point-To-Point, modem (Clause 10), baud rates: _____ ☐ LonTalk® protocol (Clause 11), medium: _____ ☐ Other:

AKRIBIS · www.akribis.info · contacto@akribis.info

Device Address Binding Is static device binding supported? (required for two-way communication between MS/TP slaves and other devices)	☐ Yes ☑ No
Networking Options	☐ Router, Clause 6: ☐ Annex H, BACnet Tunneling Router over IP ☐ BACnet/IP Broadcast Management Device (BBMD)
Does the BBMD support registrations by Foreign Devices?	☐ Yes
	☐ No
Character Sets Supported	☑ UTF-8 / ANSI X3.4 ☐ IBM®/Microsoft® DoubleByte Character Set (DBCS) ☐ ISO 8859-1 ☐ ISO 10646 Universal Character Set-2 (UCS2) ☐ ISO 10646 (UCS-4) ☐ Japanese Industrial Standard (JIS) C 6226
Types of non-BACnet equipment /network(s) supported:	None

AKRIBIS · www.akribis.info · contacto@akribis.info

Device Object

Note the following:

- Writable means writable via BACnet.
- **Max_Master** and **Max_Info_Frames** are required in a Master device.
- **UV** = Configured at Vaisala factory to a unique value. See additional information after the table.

Table 18 Device Object Properties

Property	Data type (Application Type)	Writable (Conformance Code)	Value or Initial Value	Persistence
Object_Identifier	BACnetObjectIdentifier	Y (R)	02 00 00 00 (hex) Object Type = 8, Instance = xxxxxxx **UV**	Nonvolatile
Object_Name	CharacterString[50]	Y (R)	"xMW9x_xxxxxxxx" **UV**	Nonvolatile
Object_Type	BACnetObjectType (ENUMERATED)	N (R)	8 (Device Object)	Fixed
System_Status	BACnetDeviceStatus (ENUMERATED)	N (R)	0 (Operational)	Volatile
Vendor_Name	Character String	N (R)	"Vaisala Oyj"	Fixed
Vendor_Identifier	Unsigned16	N (R)	339	Fixed
Model_Name	CharacterString	N (R)	"HMW95"	Nonvolatile
Firmware_Revision	CharacterString	N (R)	X.X.X.X (BACnet interface)	Fixed
Application_Software_Revision	CharacterString	N (R)	X.X.X.X	Fixed
Location	Character String[50]	Y (O)	“Location”	Nonvolatile
Description	Character String[50]	Y (O)	“Description”	Nonvolatile
Protocol_Version	Unsigned	N (R)	1	Fixed
Protocol_Revision	Unsigned	N (R)	4	Fixed
Protocol_Services	BACnetProtocolServices Supported (BIT STRING)	N (R)	Read Property Read Property Multiple Write Property Device Communication Control Reinitialize Device Who-Is Who-Has	Fixed
Protocol_Object_Types_Supported	BACnetObjectTypesSupported (BIT STRING)	N (R)	Analog Input Analog Value Device	Fixed
Object_List	BACnetARRAY[N]of BACnetObjectIdentifier	N (R)	Device Object AI2 (Relative Humidity) AI3 (Temperature) AI4 (Dewpoint) AI5 (Dewpoint (Tdf)) AI6 (Dewpoint depression) AI7 (Wet bulb temperature) AI8 (Absolute humidity) AI9 (Mixing ratio) AI10 (Enthalpy) AV1 (Pressure) AV2 (Altitude)	Fixed

AKRIBIS · www.akribis.info · contacto@akribis.info

Property	Data type (Application Type)	Writable (Conformance Code)	Value or Initial Value	Persistence
Max_APDU_Length_Accepted	Unsigned16	N (R)	244	Fixed
Max_Master	Unsigned16 (0..127)	Y (R/O)	127	Nonvolatile
Max_Info_Frames	Unsigned	N (R/O)	1	Fixed
Segmentation_Supported	BACnetSegmentation (ENUMERATED)	N (R)	3 (No segmentation)	Fixed
APDU_Timeout	Unsigned	N (R)	3000 (ms)	Fixed
APDU_Retries	Unsigned	N (R)	0	Fixed
Device_Address_Binding	List of BACnetAddressBinding	N (R)	NULL	Fixed
Database_Revision	Unsigned	N (R)	0	Volatile

Object_Identifier: Must be unique in BACnet network. As Object Identifier is 22 bits long its value range is 0 ... 4194303. Each device is assigned a random value in this range at Vaisala factory.

Object_Name: Must be unique in BACnet network. Default object name contains the name and serial number of the device. For example:

- Device model is HMW95, with serial number G1234567.
- Object_Name is "HMW95_G1234567".

System_Status: System status can be OPERATIONAL (0) or NON-OPERATIONAL (4). Device goes to NON-OPERATIONAL state in case of fatal error.

Protocol_Services: Who-Is, I-Am, Who-Has, I-Have and UnconfirmedCOVNotification services are available only when XMW90 is MS/TP master. Reinitialize Device service must be password protected. According to BACnet protocol, password is character string having max 20 characters. Default password is "1234". Password can be changed through the service port by using the **BACNET** command. See section Set BACnet Parameters on page 63.

Database_revision: This is changed during operation according to section 12.11.35 of ANSI/ASHRAE standard 135-2008.

AKRIBIS · www.akribis.info · contacto@akribis.info

Relative Humidity Object

This Analog Input Object exists only in the HMW95 model.

Table 19 Relative Humidity Object Properties

Property	Data type (Application Type)	Writable (Conformance Code)	Value or Initial Value	Persistence
Object_Identifier	BACnetObjectIdentifier	No (R)	00 00 00 02 (hex) Object Type = 0, Instance = 2	Nonvolatile
Object_Name	CharacterString	No (R)	"RH"	Nonvolatile
Object_Type	BACnetObjectType (ENUMERATED)	No (R)	0 (Analog Input)	Fixed
Present_Value	Real	Yes (When Oos) (R)	0.0	Volatile
Description	CharacterString	No (O)	"Relative Humidity"	Nonvolatile
Units	BACnetEngineeringUnits (ENUMERATED)	No (R)	29 (percent-relative-humidity)	Nonvolatile
Status_Flags	BACnet Status Flags (BIT STRING)	Yes (when OoS) (R)	0 (FAULT == FALSE)	Volatile
Reliability	BACnet Reliability (ENUMERATED)	Yes (when OoS) (O)	0 (NO FAULT DETECTED)	Volatile
Event State	BACnetEventState (ENUMERATED)	No (R)	0 (NORMAL)	Volatile
Out_of_Service	BOOLEAN	Yes (R)	0 (FALSE)	Volatile
COV_Increment	Real	Yes (O)	NaN (COV reporting disabled)	Nonvolatile
Min_Pres_Value	Real	No (O)	0.0 (same as limit for UNDER_RANGE)	Nonvolatile
Max_Pres_Value	Real	No (O)	100 (same as limit for OVER_RANGE)	Nonvolatile

Table 20 Status Flags

Flag	State	Cause
IN_ALARM	FALSE	Event State equals 0 (NORMAL)
	TRUE	Event State not 0
FAULT	FALSE	Reliability equals 0 (NO FAULT DETECTED)
	TRUE	Reliability not 0
OVERRIDDEN	FALSE	Always FALSE
OUT_OF_SERVICE	FALSE	Present Value may NOT be written via BACnet
	TRUE	Present Value may be written via BACnet

Table 21 Reliability

State	Cause
0 NO_FAULT_DETECTED	
1 NO_SENSOR	No contact to measurement module
2 OVER_RANGE	RH over 100%
3 UNDER_RANGE	RH under 0%
7 UNRELIABLE_OTHER	Other measurement error

Table 22 Event State

State	Cause
0 NORMAL	Reliability equals 0 (NO FAULT DETECTED)
1 FAULT	Reliability not 0

AKRIBIS · www.akribis.info · contacto@akribis.info

Calculated Humidity Objects

These Analog Input Objects exist only in the HMW95 model.

Table 23 Calculated Humidity Objects

Instance	Name	Description	Unit
4	"Td"	"Dewpoint"	62/64 (ºC/ ºF)
5	"Tdf"	"Dewpoint"	62/64 (ºC/ ºF)
6	"dTd"	"Dewpoint depression"	121/120 (ΔºK/ ΔºF)
7	"Tw"	"Wet bulb temperature"	62/64 (ºC/ ºF)
8	"a"	"Absolute humidity"	217/2000 grams-per-cubic-meter / grains-per-cubic-foot (Vaisala defined unit)
9	"x"	"Mixing ratio"	28/2001 grams-of-water-per-kilogram-dry-air / grains-of-water-per-pound (Vaisala defined unit)
10	"h"	"Enthalpy"	149/24 kilojoules-per-kilogram-dry-air / btus-per-pound-of-dry-air

Table 24 Calculated Humidity Object Properties

Property	Data type (Application Type)	Writable (Conformance Code)	Value or Initial Value	Persistence
Object_Identifier	BACnetObjectIdentifier	No (R)	00 00 00 xx (hex) Object Type = 0, Instance = x See Table 23 above.	Nonvolatile
Object_Name	CharacterString	No (R)	See Table 23 above.	Nonvolatile
Object_Type	BACnetObjectType (ENUMERATED)	No (R)	0 (Analog Input)	Fixed
Present_Value	Real	Yes (When Oos) (R)	0.0	Volatile
Description	CharacterString	No (O)	See table above	Nonvolatile
Units	BACnetEngineeringUnits (ENUMERATED)	No (R)	See table above	Nonvolatile
Status_Flags	BACnet Status Flags (BIT STRING)	Yes (when OoS) (R)	0 (FAULT == FALSE)	Volatile
Reliability	BACnet Reliability (ENUMERATED)	Yes (when OoS) (O)	0 (NO FAULT DETECTED)	Volatile
Event State	BACnetEventState (ENUMERATED)	No (R)	0 (NORMAL)	Volatile
Out_of_Service	BOOLEAN	Yes (R)	0 (FALSE)	Volatile
COV_Increment	Real	Yes (O)	NaN (COV reporting disabled)	Nonvolatile

Table 25 Status Flags

Flag	State	Cause
IN_ALARM	FALSE	Event State equals 0 (NORMAL)
	TRUE	Event State not 0
FAULT	FALSE	Reliability equals 0 (NO FAULT DETECTED)
	TRUE	Reliability not 0
OVERRIDDEN	FALSE	Always FALSE
OUT_OF_SERVICE	FALSE	Present Value may NOT be written via BACnet
	TRUE	Present Value may be written via BACnet

AKRIBIS · www.akribis.info · contacto@akribis.info

Table 26 Reliability

State	Cause
0 NO_FAULT_DETECTED	
1 NO_SENSOR	No contact to measurement module
2 OVER_RANGE	RH over 100%
3 UNDER_RANGE	RH under 0%
7 UNRELIABLE_OTHER	Other measurement error

Table 27 Event State

State	Cause
0 NORMAL	Reliability equals 0 (NO FAULT DETECTED)
1 FAULT	Reliability not 0

AKRIBIS · www.akribis.info · contacto@akribis.info

Temperature Object

Table 28 Temperature Object Properties

Property	Data type (Application Type)	Writable (Conformance Code)	Value or Initial Value	Persistence
Object_Identifier	BACnetObjectIdentifier	No (R)	00 00 00 03 (hex) Object Type = 0, Instance = 3	Nonvolatile
Object_Name	CharacterString	No (R)	"T"	Nonvolatile
Object_Type	BACnetObjectType (ENUMERATED)	No (R)	0 (Analog Input)	Fixed
Present_Value	Real	Yes (When Oos) (R)	0.0	Volatile
Description	CharacterString	No (O)	"Temperature"	Nonvolatile
Units	BACnetEngineeringUnits (ENUMERATED)	Yes (R)	62 (degrees-Celsius) Possible units are C (62) or F (64).	Nonvolatile
Status_Flags	BACnet Status Flags (BIT STRING)	Yes (when OoS) (R)	0 (FAULT == FALSE)	Volatile
Reliability	BACnet Reliability (ENUMERATED)	Yes (when OoS) (O)	0 (NO FAULT DETECTED)	Volatile
Event State	BACnetEventState (ENUMERATED)	No (R)	0 (NORMAL)	Volatile
Out_of_Service	BOOLEAN	Yes (R)	0 (FALSE)	Volatile
COV_Increment	Real	Yes (O)	NaN (COV reporting disabled)	Nonvolatile
Min_Pres_Value	Real	No (O)	-40.0 (same as limit for UNDER_RANGE)	Nonvolatile
Max_Pres_Value	Real	No (O)	+80.0 (same as limit for OVER_RANGE)	Nonvolatile

Table 29 Status Flags

Flag	State	Cause
IN_ALARM	FALSE	Event State equals 0 (NORMAL)
	TRUE	Event State not 0
FAULT	FALSE	Reliability equals 0 (NO FAULT DETECTED)
	TRUE	Reliability not 0
OVERRIDDEN	FALSE	Always FALSE
OUT_OF_SERVICE	FALSE	Present Value may NOT be written via BACnet
	TRUE	Present Value may be written via BACnet

Table 30 Reliability

State	Cause
0 NO_FAULT_DETECTED	
1 NO_SENSOR	No contact to measurement module
2 OVER_RANGE	T over +80 °C
3 UNDER_RANGE	T under -40 °C
7 UNRELIABLE_OTHER	Other measurement error

Table 31 Event State

State	Cause
0 NORMAL	Reliability equals 0 (NO FAULT DETECTED)
1 FAULT	Reliability not 0

AKRIBIS · www.akribis.info · contacto@akribis.info

Operation Pressure Object

Set current atmospheric pressure to improve the calculation accuracy of pressure dependent humidity parameters.

NOTE Pressure and Altitude objects are linked together. If Present Value in one object is changed, Present Value in another object is changed accordingly.

Table 32 Operation Pressure Object Properties

Property	Data type	Writable	Value or Initial Value
Object Identifier	BACnet Object Identifier	No	00 80 00 01 (hex) Object Type = 2, Instance = 1
Object Name	Character String	No	"OPER P"
Object Type	BACnet Object Type	No	2 (Analog Value)
Present Value	Real	Yes	1013.25
Description	Character String	No	"Operation Pressure"
Units	BACnet Engineering Units	No	133 (hectopascals)
Status Flags	BACnet Status Flags	No	0 (FAULT == FALSE)
Event State	BACnet Event State	No	0 (NORMAL, does not change)
Out of Service	BOOLEAN	No	0 (FALSE)

Table 33 Status Flags

Flag	State	Cause
IN_ALARM	FALSE	Always FALSE
FAULT	FALSE	Always FALSE
OVERRIDDEN	FALSE	Always FALSE
OUT_OF_SERVICE	FALSE	Always FALSE

AKRIBIS · www.akribis.info · contacto@akribis.info

Operation Altitude Object

Set current atmospheric pressure to improve the calculation accuracy of pressure dependent humidity parameters.

NOTE Pressure and Altitude objects are linked together. If Present Value in one object is changed, Present Value in another object is changed accordingly.

Table 34 Operation Altitude Object Parameters

Property	Data type	Writable	Value or Initial Value
Object Identifier	BACnet Object Identifier	No	00 80 00 02 (hex) Object Type = 2, Instance = 2
Object Name	Character String	No	"OPER Altitude"
Object Type	BACnet Object Type	No	2 (Analog Value)
Present Value	Real	Yes	0.0
Description	Character String	No	"Operating Altitude"
Units	BACnet Engineering Units	Yes	31 (meters) or 33 (feet)
Status Flags	BACnet Status Flags	No	0 (FAULT == FALSE)
Event State	BACnet Event State	No	0 (NORMAL, does not change)
Out of Service	BOOLEAN	No	0 (FALSE)

Table 35 Status Flags

Flag	State	Cause
IN_ALARM	FALSE	Always FALSE
FAULT	FALSE	Always FALSE
OVERRIDDEN	FALSE	Always FALSE
OUT_OF_SERVICE	FALSE	Always FALSE

AKRIBIS · www.akribis.info · contacto@akribis.info

BIBBs Supported

Table 36 below lists all the BIBBs which, per ANSI/ASHRAE Standard 135-2008, could be supported by a BACnet Smart Sensor (B-ASC). The checked BIBBs are supported by the device.

Table 36 BACnet Smart Sensor BIBBs Support

Application Service (B-SS)	Designation	Supported
Data Sharing - Read Property - A	DS-RP-A	☐
Data Sharing - Read Property - B	DS-RP-B	☑
Data Sharing - Read Property Multiple - A	DS-RPM-A	☐
Data Sharing - Read Property Multiple - B	DS-RPM-B	☑
Data Sharing - Write Property - A	DS-WP-A	☐
Data Sharing - Write Property - B	DS-WP-B	☑
Data Sharing - Write Property Multiple - B	DS-WPM-B	☐
Data Sharing - COV - Unsolicited - A	DS-COVU-A	☐
Data Sharing - COV - Unsolicited - B	DS-COVU-B	☑
Alarm and Event - Notification Internal - B	AE-N-I-B	☐
Alarm and Event - ACK - B	AE-ACK-B	☐
Alarm and Event - Information - B	AE-INFO-B	☐
Alarm and Event - Enrollment Summary - B	AE-ESUM-B	☐
Scheduling - External - B	SCHED-E-B	☐
Trending - Viewing and Modifying Trends Internal - B	T-VMT-I-B	☐
Trending - Automated Trend Retrieval - B	T-ATR-B	☐
Device Management - Dynamic Device Binding - A	DM-DDB-A	☐
Device Management - Dynamic Device Binding - B	DM-DDB-B	☑
Device Management - Dynamic Object Binding - A	DM-DOB-A	☐
Device Management - Dynamic Object Binding - B	DM-DOB-B	☑
Device Management - Device Communication Control - B	DM-DCC-B	☑
Device Management - Time Synchronization - B	DM-TS-B	☐
Device Management - UTC Time Synchronization - B	DM-UTC-B	☐
Device Management - Reinitialize Device - B	DM-RD-B	☑
Device Management - Backup and Restore - B	DM-BR-B	☐
Network Management - Connection Establishment - A	NM-CE-A	☐

AKRIBIS · www.akribis.info · contacto@akribis.info

Application Services Supported

Table 37 below lists all the BACnet standard application services. The checked services are supported by the device.

Table 37 BACnet Standard Application Services Support

Application Service	Initiates Requests	Executes Requests
AcknowledgeAlarm	☐	☐
AddListElement	☐	☐
AtomicReadFile	☐	☐
AtomicWriteFile	☐	☐
ConfirmedCOVNotification	☐	☐
ConfirmedEventNotification	☐	☐
ConfirmedPrivateTransfer	☐	☐
ConfirmedTextMessage	☐	☐
CreateObject	☐	☐
DeleteObject	☐	☐
DeviceCommunicationControl	☐	☑
Disconnect-Connection-To-Network	☐	☐
Establish-Connection-To-Network	☐	☐
GetAlarmSummary	☐	☐
GetEnrollmentSummary	☐	☐
GetEventInformation	☐	☐
I-Am	☑	☐
I-Am-Router-To-Network	☐	☐
I-Could-Be-Router-To-Network	☐	☐
I-Have	☑	☐
Initialize-Routing-Table	☐	☐
Initialize-Routing-Table-Ack	☐	☐
LifeSafetyOperation	☐	☐
ReadProperty	☐	☑
ReadPropertyConditional	☐	☐
ReadPropertyMultiple	☐	☑
ReadRange	☐	☐
ReinitializeDevice	☐	☑
RemoveListElement	☐	☐
SubscribeCOV	☐	☐
SubscribeCOVProperty	☐	☐
TimeSynchronization	☐	☐
UnconfirmedCOVNotification	☑	☐
UnconfirmedEventNotification	☐	☐
UnconfirmedPrivateTransfer	☐	☐
UnconfirmedTextMessage	☐	☐
UTCTimeSynchronization	☐	☐
VT-Close	☐	☐
VT-Data	☐	☐
VT-Open	☐	☐
Who-Has	☐	☑
Who-Is	☐	☑
Who-Is-Router-To-Network	☐	☐
WriteProperty	☐	☑
WritePropertyMultiple	☐	☐

AKRIBIS · www.akribis.info · contacto@akribis.info

APPENDIX B
MODBUS REFERENCE

This appendix describes the Modbus protocol implementation of the HMW90 series digital transmitters.

NOTE For more information on Modbus protocol, refer to the Specification and Implementation Guide for Modbus Over Serial Line.

NOTE Serial line settings such as baud rate are configured using DIP switches. See section Configuration of Digital Output Models on page 23.

Table 38 Modbus Functions Supported by HMW90

Function Code	Name
03 (0x03)	Read Holding Registers
04 (0x04)	Read Input Register
06 (0x06)	Write Single Register
16 (0x10)	Write Multiple Registers
43 / 14 (0x2B / 0x0E)	Read Device Identification

Table 39 HMW90 Modbus Measurement Data Registers

Name	Metric float	Metric integer	Metric unit	Non-metric float	Non-metric integer	Non-metric unit
RH	0003…0004	0258 (×0.01)	%RH	6403…0004	6658 (×0.01)	%RH
T	0005…0006	0259 (×0.01)	°C	6405…0006	6659 (×0.01)	°F
Td	0007…0008	0260 (×0.01)	°C	6407…0008	6660 (×0.01)	°F
Tdf	0009…0010	0261 (×0.01)	°C	6409…0010	6661 (×0.01)	°F
dTd	0011…0012	0262 (×0.01)	°C	6411…0012	6662 (×0.01)	°F
Tw	0013…0014	0263 (×0.01)	°C	6413…0014	6663 (×0.01)	°F
a	0015…0016	0264 (×0.01)	g/m3	6415…0016	6664 (×0.01)	gr/ft3
x	0017…0018	0265 (×0.01)	g/kg	6417…0018	6665 (×0.01)	gr/lb
h	0019…0020	0266 (×0.01)	kJ/kg	6419…0020	6666 (×0.01)	btu/lb

Values read from the integer registers must be multiplied with the provided multiplier to get the actual value. All integer values are signed.

AKRIBIS · www.akribis.info · contacto@akribis.info

Available measurements depend on the transmitter model. Values may be unavailable also in case of device failure. Read status registers or exception status outputs to check for failures. Accessing unavailable (unsupported or temporarily missing) measurement data does not generate an exception. “Unavailable” value (a quiet NaN for floating point data or 0x8000 for integer data) is returned instead. An exception is generated only for any access outside the HMW90 registers.

A “quiet NaN” value is returned for unavailable values. Writing any NaN or infinite value is silently ignored.

NOTE A complete 32-bit floating point value should be read and written in a single Modbus transaction.

Table 40 HMW90 Modbus Status Registers (Read-only)

Name	Address	Description
Error code (bits 15…0)	0513,6913	0 = no errors

Table 41 HMW90 Modbus Error Code Bits

Bit	Description
0	Any critical error is active. Requires transmitter restart or maintenance.
1	Any error is active. May be recoverable.
2	Internal error (Flash).
3	Module communication or compatibility error.
4	HTM10 module error.
5	Temperature measurement error.
6	Humidity measurement error.
7	Reserved.
8	Reserved.
9	Miscellaneous error.

Table 42 HMW90 Modbus Configuration Parameter Registers

Name	Metric float	Metric integer	Metric unit & valid range	Non-metric float	Non-metric integer	Non-metric unit & valid range
Pressure	0777…0779	1029 (×1)	700…1100 hPa	7177…7179	7429 (×1)	700 … 1100 hPa
Elevation	0779…0780	1030 (×1)	-700...2300 m	7179…7180	7430 (×1)	-2300 … 10000 ft

NOTE Elevation is linked to pressure according to the following equation:

$$p = 101325\ (1 - 2.25577\ 10^{-5}\ h)^{5.25588}$$

where p is pressure in Pa and h is altitude above sea level in m. This means that changing altitude will also change pressure and vice versa.

AKRIBIS · www.akribis.info · contacto@akribis.info

Table 43 HMW90 Modbus Device Identification

Object Id	Object Name	Description
0x00	VendorName	“Vaisala”
0x01	ProductCode	Transmitter model (for example, “HMW95”)
0x02	MajorMinorVersion	Software version (for example, “1.0.0”)
0x03	VendorUrl	“http://www.vaisala.com/”
0x04	ProductName	HMW90
0x80	SerialNumber	Serial number (e.g. “H0810040”)
0x81	CalibrationDate	Date of the last calibration (for example, “2014-09-11”, empty if not available)
0x82	CalibrationText	Information text of the last calibration (empty if not available)

Table 44 HMW90 Modbus Exception Responses

Code	Name	Reason
01	ILLEGAL FUNCTION	Unsupported function code
02	ILLEGAL DATA ADDRESS	Address out of valid ranges
03	ILLEGAL DATA VALUE	Otherwise invalid request

AKRIBIS · www.akribis.info · contacto@akribis.info

www.vaisala.com

M211399EN

AKRIBIS · www.akribis.info · contacto@akribis.info