USER GUIDE

HMS110

Vaisala · Authorized Partner

Distributed by AKRIBIS

M211726EN-L

User Guide

Vaisala Humidity and Temperature Transmitter Series

HMDW110 with TMI110

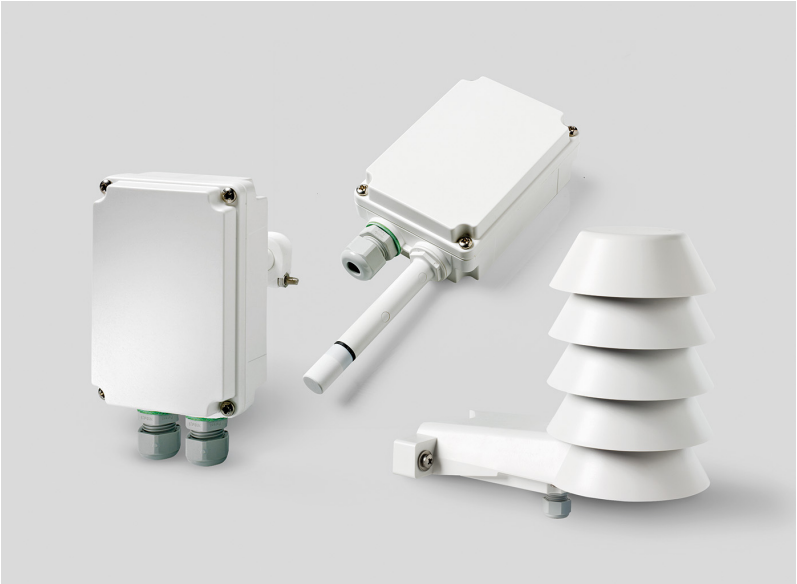

VAISALA

AKRIBIS · www.akribis.info · contacto@akribis.info

PUBLISHED BY

Vaisala Oyj
Vanha Nurmijärventie 21, FI-01670 Vantaa, Finland
P.O. Box 26, FI-00421 Helsinki, Finland
+358 9 8949 1
vaisala.com
docs.vaisala.com

© Vaisala 2026

No part of this document may be reproduced, published, or publicly displayed in any form or by any means, electronic or mechanical (including photocopying), nor may its contents be modified, translated, adapted, sold, or disclosed to a third party without prior written permission of the copyright holder. Translated document and translated portions of the document are based on the original English version. Parts of the translation may have been created using machine-assisted translation. In ambiguous cases, the English version is applicable, not the translation.

The contents of this document are subject to change without prior notice.

Local rules and regulations applicable to the products and services may vary, and they shall take precedence over the information contained in this document. Vaisala makes no representations on this document's compliance with the local rules and regulations applicable at any given time, and hereby disclaims any and all responsibilities related thereto. You are instructed to confirm the applicability of the local rules and regulations and their effect on the intended use of the products and services.

This document does not create any legally binding obligations for Vaisala towards customers or end users. All legally binding obligations are set forth exclusively in the applicable contract or in the relevant set of General Conditions of Vaisala (vaisala.com/policies).

This product contains software developed by Vaisala or third parties. Use of the software is governed by license terms and conditions included in the applicable contract or, in the absence of separate license terms and conditions, by the General License Conditions of Vaisala Group.

Table of contents

1. About this document ... 9
1.1 Version information ... 9
1.2 Related manuals ... 9
1.3 Documentation conventions ... 10
1.4 Trademarks ... 10

2. Product overview ... 12
2.1 Introduction to HMDW110 series ... 12
2.2 Output parameters explained ... 12
2.3 HMD110/112 and TMD110/112 parts ... 14
2.4 HMW110/112 and TMW110/112 parts ... 15
2.5 HMS110/112 parts ... 17
2.6 TMI110 parts ... 18
2.7 HMDW110 series component boards ... 19
2.8 Analog output overrange behavior ... 20
2.9 Safety ... 20
2.9.1 ESD protection ... 20

3. Installation ... 21
3.1 Selecting location ... 21
3.2 HMD110/112 and TMD110/112 installation ... 21
3.3 HMW110/112 and TMW110/112 installation ... 23
3.4 HMS110/112 installation ... 25
3.5 TMI110 installation ... 28
3.6 Wiring devices with analog output ... 32
3.6.1 Wiring both current loops with a single power supply ... 33
3.7 Wiring devices with Modbus output ... 33
3.8 M12 connector pinout and wiring (HMW110 and TMW110) ... 34

4. Modbus communication ... 36

5. Vaisala Insight PC software ... 37
5.1 Connecting to Insight PC software ... 38
5.2 Installing driver for USB service cable ... 38

6. Using service port with terminal application ... 40
6.1 Connecting to service port ... 40
6.2 Terminal application settings ... 40
6.3 Accessing service port command interface in devices with Modbus output ... 41
6.4 Serial commands ... 42
6.5 Device information and status ... 44

6.6 Serial line output and communication 47
6.6.1 Measurement output 47
6.6.2 Measurement output format 49
6.6.3 Serial line communication 51
6.7 Analog output 53
6.8 Calibration and adjustment commands 55
6.9 Other commands 59

7. Maintenance 61
7.1 Cleaning 61
7.2 Calibration and adjustment 61
7.2.1 Adjustment types 62
7.2.2 Adjustment points 62
7.3 Calibration and adjustment using handheld meter and reference probe 63
7.4 One-point humidity calibration and adjustment using handheld meter and HMK15 Humidity Calibrator 64
7.5 Two-point humidity calibration and adjustment using computer and HMK15 Humidity Calibrator 66
7.6 Two-point temperature calibration and adjustment using computer 69
7.7 Replacing HUMICAP sensor on HMD110/112 and HMW110/112 72
7.8 Replacing HUMICAP sensor on HMS110/112 73
7.9 Filter options 75

8. Troubleshooting 76
8.1 Problem situations 76
8.2 Error messages in Insight software 77
8.3 Error codes in MI70 handheld indicator 78
8.4 Unknown serial settings 78

9. Technical data 79
9.1 HMD110/112, TMD110/112, HMW110/112, TMW110/112, and HMS110/112 specifications 79
9.2 TMI110 specifications 81
9.3 Dimensions 84
9.4 Spare parts and accessories 86

Appendix A: Modbus reference 88
A.1 Default communication settings 88
A.2 Function codes 88
A.3 Data encoding 88
A.4 Modbus registers 89
A.4.1 Measurement data registers 89
A.4.2 Status registers 90
A.4.3 Configuration registers 91
A.4.4 Test value registers 92
A.4.5 Device identification objects 92

A.5 Modbus communication examples..... 93

Maintenance and calibration services..... 95

Technical support..... 95

Warranty..... 95

Recycling..... 96

List of figures

Figure 1 HMD110/112 and TMD110/112 parts....14
Figure 2 HMW110/112 and TMW110/112 parts.... 15
Figure 3 HMS110/112 parts.... 17
Figure 4 TMI110 parts....18
Figure 5 Component board of models HMD110/112, HMW110/112, and HMS110/112, with humidity and temperature measurement....19
Figure 6 Component board of models TMD110/112, TMW110/112, and TMI110, with temperature measurement only....19
Figure 7 HMD110/112 and TMD110/112 installation.... 22
Figure 8 HMD110/112 and TMD110/112 centering inside duct....23
Figure 9 HMW110/112 and TMW110/112 installation.... 24
Figure 10 Recommended installation locations for thermowell....29
Figure 11 HMDW110 series supply voltage operating region.... 32
Figure 12 HMD110/112, HMW110/112, and HMS110/112 wiring example, analog output....33
Figure 13 TMI110, TMW110, and TMD110 wiring, analog output....33
Figure 14 HMD110/112, HMW110/112, and HMS110/112 wiring with single power supply....33
Figure 15 HMDW110 series transmitter wiring, Modbus output....34
Figure 16 PuTTY terminal application....41
Figure 17 HMD110/112 and TMD110/112 dimensions....84
Figure 18 HMW110/112 and TMW110/112 dimensions.... 84
Figure 19 HMS110/112 dimensions.... 85
Figure 20 TMI110 dimensions....86

List of tables

Table 1 Document versions (English)....9
Table 2 Related manuals....9
Table 3 HMDW110 series output parameters....12
Table 4 Modbus output M12 connector pinout....34
Table 5 HMW110 analog output M12 connector pinout....35
Table 6 TMW110 analog output M12 connector pinout....35
Table 7 Default Modbus serial communication settings....36
Table 8 HMDW110 serial commands....42
Table 9 ? command....44
Table 10 Errs command....44
Table 11 Error messages on ERRS command....45
Table 12 Help command....45
Table 13 System command....46
Table 14 Time command....47
Table 15 Send command....47
Table 16 R command....48
Table 17 S command....48
Table 18 Intv command....48
Table 19 Unit command....49
Table 20 Form command....49
Table 21 Output parameters for form command....50
Table 22 Modifiers for form command....50
Table 23 Open command....51
Table 24 Close command....51
Table 25 Addr command....51
Table 26 Seri command....52
Table 27 Sdelay command....52
Table 28 Smode command....53
Table 29 Aerr command....53
Table 30 Amode command....54
Table 31 Aover command....54
Table 32 Asel command....55
Table 33 Cdate command....56
Table 34 Crh command....56
Table 35 Crhclr command....56
Table 36 Ct command....57
Table 37 Ctclr command....57
Table 38 Ctext command....57
Table 39 Fcrh command....58
Table 40 L command....58
Table 41 Li command....58
Table 42 Filt command....59
Table 43 Frestore command....60
Table 44 Reset command....60
Table 45 Error messages in Insight software....77

Table 46 Error codes in MI70....78
Table 47 HMD110/112, TMD110/112, HMW110/112, TMW110/112, and HMS110/112 measurement performance....79
Table 48 HMD110/112, TMD110/112, HMW110/112, TMW110/112, and HMS110/112 calculated parameters....79
Table 49 HMD110/112, TMD110/112, HMW110/112, TMW110/112, and HMS110/112 inputs and outputs....80
Table 50 HMD110/112, TMD110/112, HMW110/112, TMW110/112, and HMS110/112 operating environment....80
Table 51 HMD110/112, TMD110/112, HMW110/112, TMW110/112, and HMS110/112 compliance....81
Table 52 HMD110/112, TMD110/112, HMW110/112, TMW110/112, and HMS110/112 mechanical specifications....81
Table 53 TMI110 measurement performance....81
Table 54 TMI110 inputs and outputs....82
Table 55 TMI110 operating environment....82
Table 56 TMI110 compliance....83
Table 57 TMI110 mechanical specifications....83
Table 58 HMD110/112, TMD110/112, HMW110/112, TMW110/112, and HMS110/112 spare parts and accessories....86
Table 59 TMI110 spare parts and accessories....87
Table 60 Default Modbus serial communication settings....88
Table 61 Modbus function codes....88
Table 62 HMD110/112, HMW110/112, and HMS110/112 Modbus measurement data registers (read-only)....89
Table 63 TMI110 Modbus measurement data register (read-only)....89
Table 64 Modbus status registers (read-only)....90
Table 65 Error codes on Modbus interface....90
Table 66 Modbus configuration data registers (writable)....91
Table 67 Modbus test registers (read-only)....92
Table 68 Device identification objects....92

1. About this document

1.1 Version information

This document provides information for installing, operating, and maintaining HMDW110 series transmitters, including HMD110/112/112D, TMD110/112/112D, HMW110/112/112D, TMW110/112/112D, HMS110/112, and TMI110.

Table 1 Document versions (English)

Document code	Date	Description
M211726EN-L	September 2026	TMD112 and TMW112 model options added. Revised model list information. Added information about TMI110 thermowell screw maximum torque. Updated sections: • Introduction to HMDW110 series (page 12) • HMD110/112 and TMD110/112 parts (page 14) • HMW110/112 and TMW110/112 parts (page 15) • HMD110/112 and TMD110/112 installation (page 21) • HMW110/112 and TMW110/112 installation (page 23) • TMI110 installation (page 28) • HMD110/112, TMD110/112, HMW110/112, TMW110/112, and HMS110/112 specifications (page 79)
M211726EN-K	June 2026	Added information about the 50-mm TMI110 probe option. Updated sections: • TMI110 specifications (page 81) • Dimensions (page 84)
M211726EN-J	May 2025	Added information about the optional display for TMI110. Updated sections: • TMI110 parts (page 18) • TMI110 specifications (page 81)

1.2 Related manuals

Table 2 Related manuals

Document code	Description
M211692EN	Vaisala HMDW110 Series Humidity and Temperature Transmitters Quick Guide
M212730EN	Vaisala TMI110 Temperature Transmitter Quick Guide

Document code	Description
M210297EN	Vaisala HUMICAP® Hand-Held Humidity and Temperature Meter HM70 User's Guide
M210185EN	Vaisala Humidity Calibrator HMK15 User's Guide

1.3 Documentation conventions

WARNING! Alerts you to a serious hazard. If you do not read and follow instructions carefully at this point, there is a risk of injury or even death.

CAUTION! Alerts you to a potential hazard. If you do not read and follow instructions carefully at this point, the product could be damaged or important data could be lost.

Highlights important information on using the product.

Gives information for using the product more efficiently.

Lists tools needed to perform the task.

Indicates that you need to take some notes during the task.

1.4 Trademarks

Vaisala® and HUMICAP® are registered trademarks of Vaisala Oyj.

Windows® is either a registered trademark or trademark of Microsoft Corporation in the United States and other countries.

Modbus® is a registered trademark of Schneider Automation Inc.

All other product or company names that may be mentioned in this publication are trade names, trademarks, or registered trademarks of their respective owners.

2. Product overview

2.1 Introduction to HMDW110 series

Vaisala HUMICAP® Humidity and Temperature Transmitter Series HMDW110 measure relative humidity and temperature in multiple HVAC applications. The series includes transmitters for duct mounting, IP65-rated wall transmitters, immersion temperature transmitters, and outdoor transmitters with integrated radiation shields. The transmitters can be ordered with an optional display or without a display.

The series consists of the following models:

- HMD110/112/112D models (RH+T) for installation in ventilation ducts
- TMD110/112/112D (T) temperature transmitter for duct installation
- HMW110/112/112D models (RH+T) for wall installation
- TMW110/112/112D (T) temperature transmitter for wall installation
- HMS110/112 models (RH+T) for outdoor use
- TMI110 models (T) for measuring heating/cooling water temperatures

The transmitters can be ordered as:

- Loop powered models, with 2-wire current outputs for humidity (when applicable) and temperature
- Separately powered models, with RS-485 Modbus RTU output

HMD112/HMD112D, HMW112/HMW112D, HMS112, TMD112/TMD112D, and TMW112/TMW112D are standard models that are preconfigured for current output at the factory. HMD110, TMD110, HMW110, TMW110, TMI110, and HMS110 are factory configurable models that are delivered with customer specific output settings, including calculated humidity parameters (when applicable) and special scaling of current outputs, or factory activated Modbus RTU functionality. HMW110 and TMW110 transmitters can be ordered either with a cable gland with screw terminal wiring, or with an M12 connector. Other transmitter models use a cable gland with screw terminal wiring.

2.2 Output parameters explained

HMDW110 series transmitters offer several output parameters. Relative humidity (RH) and temperature (T) are the measured parameters, the others are calculated based on RH and T. The TMD110/112, TMW110/112, and TMI110 temperature transmitter models only measure temperature.

Table 3 HMDW110 series output parameters

Parameter	Symbol	Units	Description
Temperature	T	°C °F	Temperature in Celsius or Fahrenheit scale.

Parameter	Symbol	Units	Description
Relative humidity	RH	%	Ratio of the partial pressure of water vapor in the air to the saturation vapor pressure of air at current temperature.
Dew point	$T_{d/f}$	°C °F	Temperature at which the water vapor in the air will condense into water at the current pressure. When the dew point is below 0 °C, the transmitter outputs frost point (T_f) instead of dew point.
Enthalpy	h	kJ/kg BTU/lb	Sum of the internal energy of a thermodynamic system.
Wet bulb temperature	T_w	°C °F	The minimum temperature that can be reached by evaporative cooling in the current conditions.

Check the type label on your transmitter to verify its output parameters and scaling of the output channels.

2.3 HMD110/112 and TMD110/112 parts

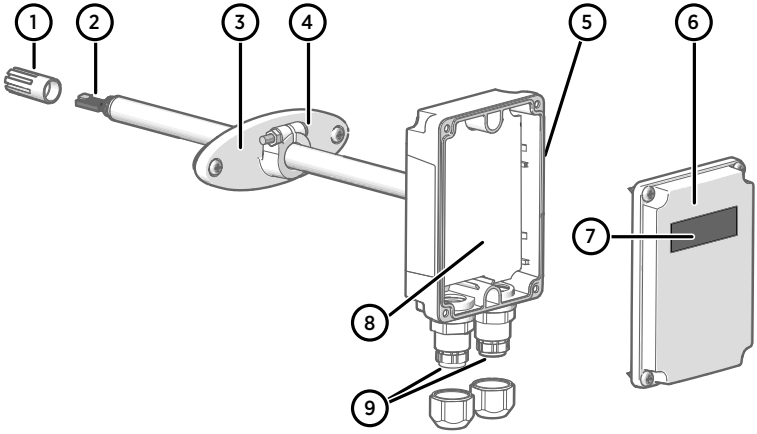

Figure 1 HMD110/112 and TMD110/112 parts

1 PTFE membrane filter
2 RH and T sensors (TMD110: T sensor)
3 Fastening flange
4 Tightening screw for fastening flange
5 Type label
6 Transmitter cover with captive screws
7 Display (optional)
8 Component board
9 Cable glands for 4–8 mm diameter cable

More information

- HMDW110 series component boards (page 19)

2.4 HMW110/112 and TMW110/112 parts

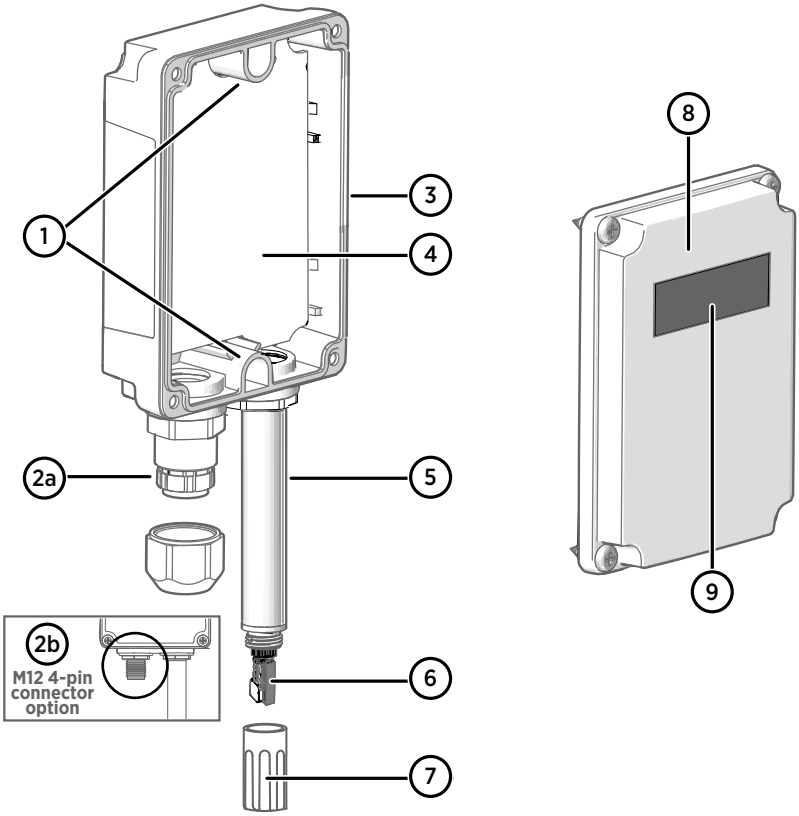

Figure 2 HMW110/112 and TMW110/112 parts

1 Screw holes for mounting (2 pcs)
2a Cable gland for 4–8 mm diameter cable
2b M12 4-pin male connector option
3 Type label
4 Component board
5 Probe
6 RH and T sensors (TMW110: T sensor)
7 PTFE membrane filter (item code ASM210856SP)
8 Transmitter cover with captive screws
9 Display (optional)

An M12-4F / M8-4M connection cable (length: 1.2 m (3.94 ft)) for HMW110 and TMW110 transmitters with the M12 connector is available as an accessory (Vaisala item code 279222SP).

More information

- HMDW110 series component boards (page 19)

2.5 HMS110/112 parts

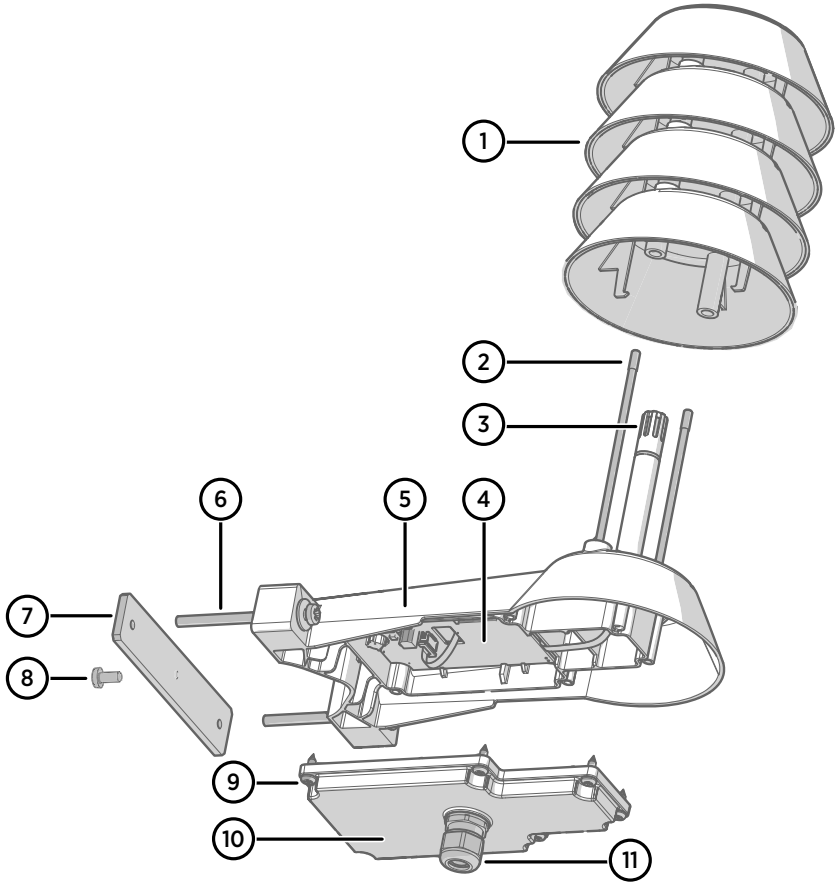

Figure 3 HMS110/112 parts

1 Radiation shield. Do not remove for installation, only when replacing the sensor or filter.
2 Long screws that keep the radiation shield in place (2 pcs), 3 mm hex socket.
3 Sensors for humidity and temperature under PTFE membrane filter (ASM210856SP).
4 Component board.
5 Transmitter body.
6 Screws for pole mounting (2 pcs, medium size Pozidriv).
7 Clamp for pole mounting. The holes are threaded for the included pole mounting screws and set screw.
8 Set screw (medium size Pozidriv). Install after pole mounting to stop the transmitter from turning.
9 Medium size crosshead screws (6 pcs).
10 Transmitter cover.
11 Cable gland. Suitable for 4–8 mm diameter cable.

2.6 TMI110 parts

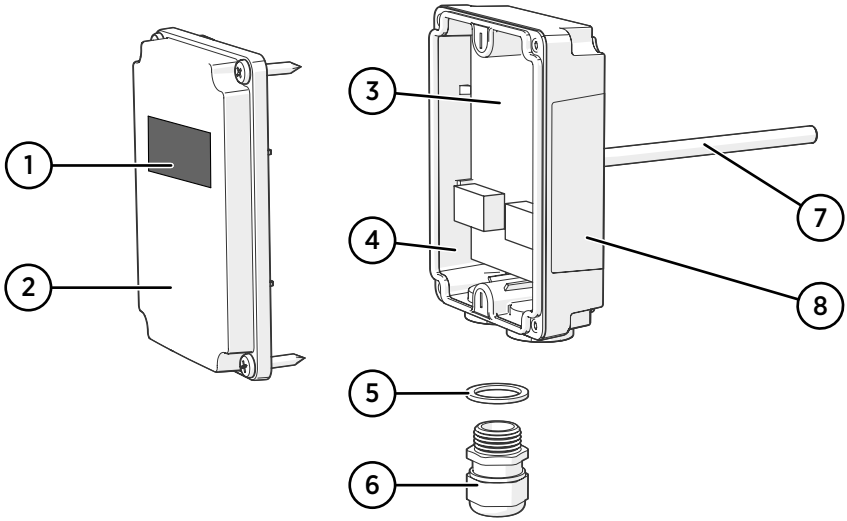

Figure 4 TMI110 parts

1 Display (optional)
2 Transmitter cover with captive screws
3 Component board
4 Transmitter body
5 Sealing ring
6 Cable gland
7 Probe
8 Type label

2.7 HMDW110 series component boards

The component boards of the HMDW110 series transmitters have 2 output types: Modbus mode (RS-485) and analog mode (current output). The output type is selected when ordering the device. See the type label of the device to see the chosen output type.

The component boards have also a service port for configuration and calibration use.

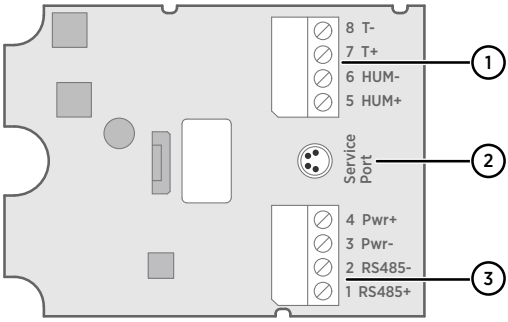

Figure 5 Component board of models HMD110/112, HMW110/112, and HMS110/112, with humidity and temperature measurement

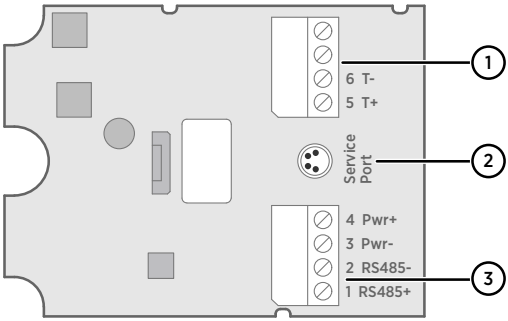

Figure 6 Component board of models TMD110/112, TMW110/112, and TMI110, with temperature measurement only

1 Terminal block for 4–20 mA current loop output(s). Must be disconnected when the transmitter is powered through RS-485 connection in the lower terminal block (terminals 1–4).
2 Service port connector (4-pin M8)
3 Terminal block for RS-485 output. For Modbus connection.

> You can pull out the terminal blocks from the component board for easier installation, and to disconnect the transmitter from power and RS-485 when using the service port.

Before using the transmitter in Modbus mode, always disconnect the terminal block for terminals 5–8 to prevent the effects of ground loop on measurements. The RS-485 connector used for Modbus communication in the lower terminal block will power the transmitter.

2.8 Analog output overrange behavior

Analog outputs of the HMDW110 series transmitters have a defined behavior when the values measured by the transmitter are outside the scaled analog output range:

- Output is clipped at the end of the scaled output range.
- You can allow the output to exceed the scaled range by 10 % with the `aover` serial command.
- Output is set to error state (default 3.6 mA) if an error is active (for example, due to sensor damage). You can change the error state using the `aerr` command.

For configuration of the analog outputs using serial commands, see Analog output (page 53).

2.9 Safety

The Vaisala HMDW110 series transmitter delivered to you has been tested for safety and approved as shipped from the factory. Note the following precautions:

CAUTION! Do not modify the unit or use it in ways not described in the documentation. Improper modification or use may lead to safety hazards, equipment damage, failure to perform according to specification, or decreased equipment lifetime.

2.9.1 ESD protection

Electrostatic discharge (ESD) can damage electronic circuits. Vaisala products are adequately protected against ESD for their intended use. However, it is possible to damage the product by delivering electrostatic discharges when touching, removing, or inserting any objects in the equipment housing.

To avoid delivering high static voltages to the product:

- Handle ESD-sensitive components on a properly grounded and protected ESD workbench or by grounding yourself to the equipment chassis with a wrist strap and a resistive connection cord.
- If you are unable to take either precaution, touch a conductive part of the equipment chassis with your other hand before touching ESD-sensitive components.
- Hold component boards by the edges and avoid touching component contacts.

3. Installation

3.1 Selecting location

When mounting duct model transmitters:

- Avoid installing in a location where condensation may fall on the sensor inside the duct.
- Position the sensor in the center of the duct.
- Select a site where the transmitter can be installed horizontally, onto the side of the duct. Do not point the probe downward, as this will make condensation run down to the sensor.

When mounting wall model transmitters:

- Select a location that represents well the area of interest.
- Do not install on the ceiling.
- Avoid placing the transmitter near heat and moisture sources, close to the discharge of the supply air ducts, and in direct sunlight.

When mounting outdoor transmitters:

- Install in a location with a good airflow around the transmitter.
- Avoid placing the transmitter near windows, air conditioning units, or other heat and moisture sources such as cooling towers.
- Install the transmitter at least 2.5 m above ground level.

When mounting immersion type transmitters to measure the temperature of liquid:

- Always install the transmitter in a thermowell (installation pocket). Use heat transfer paste inside the thermowell.
- Position the sensor close to the center of the pipe.
- Prefer a site where the transmitter can be installed horizontally, onto the side of the pipe. The thermowell should be installed in such a position that any condensation can run off.

3.2 HMD110/112 and TMD110/112 installation

- Medium size crosshead screwdriver (Pozidriv) for the screws on the cover and the flange
- Small flat head screwdriver for screw terminals
- Drill with 2.5-mm and 13-mm bits for making the installation holes
- Tools for cutting and stripping wires
- 19-mm open-end wrench for tightening the cable gland

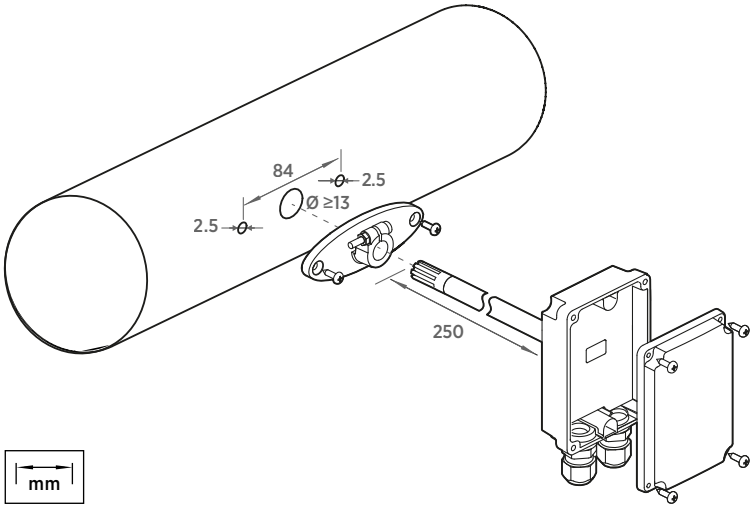

Figure 7 HMD110/112 and TMD110/112 installation

1. Remove the yellow transport protection cap and separate the fastening flange from the transmitter.
2. Use the flange to mark the location and size of the installation holes on the side of the duct.
3. Drill the installation holes in the duct. Secure the fastening flange to the duct with the two screws (included).

4. Push the probe of the transmitter through the flange and into the duct. The probe should reach far enough so that the sensor is located in the middle of the duct.

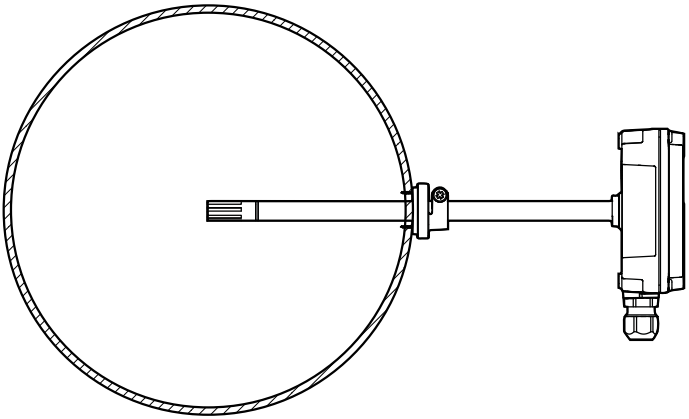

Figure 8 HMD110/112 and TMD110/112 centering inside duct

5. Secure the transmitter to the flange by tightening the screw on the flange that holds the probe in place.
6. Open the transmitter cover and route the cables through the cable glands.

   Connect the wires to the screw terminals according to the wiring instructions.
7. Tighten the cable gland(s) and close the transmitter cover.

More information

- HMDW110 series component boards (page 19)
- Wiring devices with analog output (page 32)
- Wiring devices with Modbus output (page 33)

3.3 HMW110/112 and TMW110/112 installation

- Medium size crosshead screwdriver (Pozidriv) for cover screws
- Two installation screws: Ø ≤ 3.5 mm, head Ø ≤ 8 mm
- Depending on the wall material and screw type, you may need a drill and a suitable drill bit to make installation holes for the screws
- Small flat head screwdriver for screw terminals [1]
- Tools for cutting and stripping wires [1]
- 19-mm open-end wrench for tightening the cable gland [1]

[1] Not required with M12 connector option

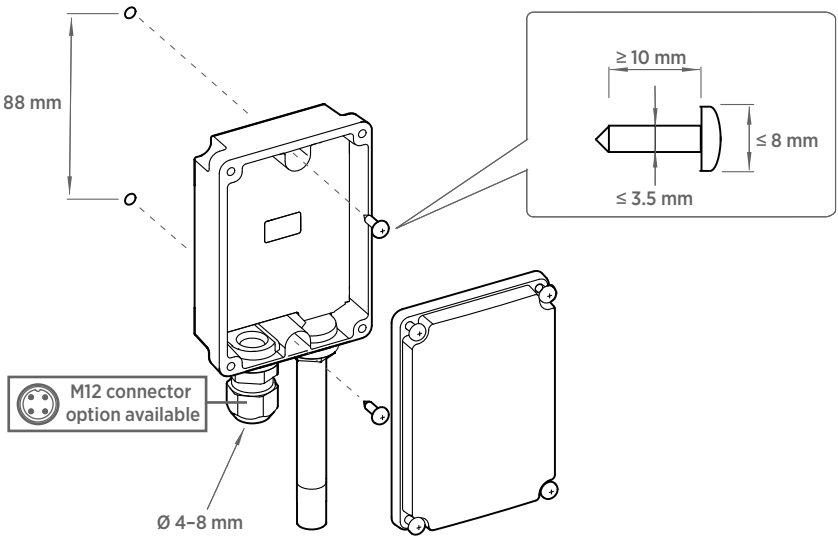

Figure 9 HMW110/112 and TMW110/112 installation

1. Open the transmitter cover and use two screws (not included) to attach the transmitter to the wall. The probe and cable gland / M12 connector should point down.
2. Connect the wiring:
   a. With cable gland: route the cable through the cable gland and connect the wires to the screw terminals according to the wiring instructions.
   b. With M12 connector: connect the M12 cable to the connector.
3. Tighten the cable gland (if using the cable gland option) and close the transmitter cover.
4. Remove the yellow transport protection cap from the probe.

An M12-4F / M8-4M connection cable accessory (length: 1.2 m (3.94 ft)) for HMW110 and TMW110 transmitters with the M12 connector is available from Vaisala (item code: 279222SP).

More information

- HMDW110 series component boards (page 19)
- Wiring devices with analog output (page 32)
- Wiring devices with Modbus output (page 33)

3.4 HMS110/112 installation

- Medium size crosshead screwdriver (Pozidriv)
- Small flat head screwdriver for screw terminals
- Tools for cutting and stripping wires
- 19-mm open-end wrench for tightening the cable gland

Additional tools for pole installation:

- Zip ties for securing the cable to the pole

Additional tools for wall installation:

- Drill and bits
- Screws (2 pcs, Ø < 5.5 mm) and wall plugs
- Cable clips for securing the cable to the wall

1. Open the six screws that hold the transmitter cover.
2. Route the power and signal cable through the cable gland, and connect the wires to the screw terminals according to the wiring instructions:
   - Wiring devices with analog output (page 32)
   - Wiring devices with Modbus output (page 33)

   For the arrangement of the screw terminals, see HMDW110 series component boards (page 19).

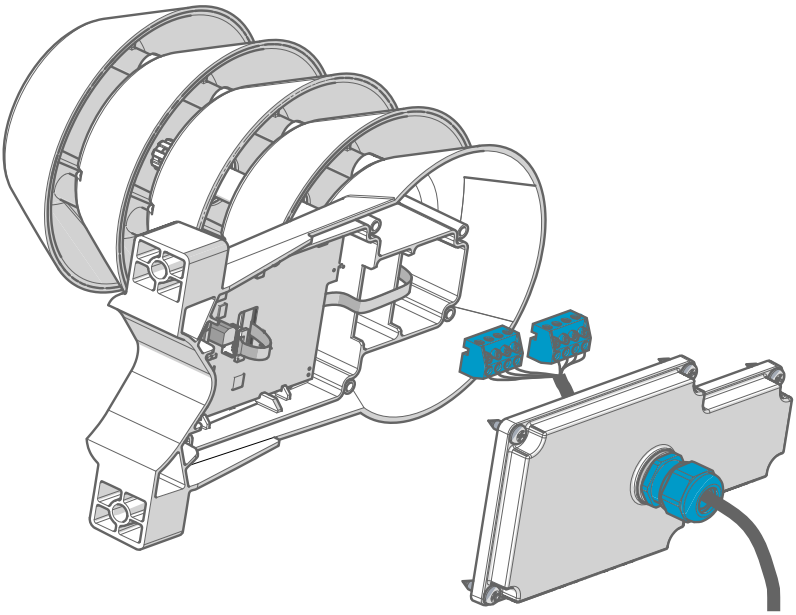

3. Adjust the length of cable between the cable gland and the terminal blocks.

   Make the cable short enough to close the cover without leaving a cable loop in the transmitter.

4. Disconnect the wired screw terminal blocks by pulling them off from the component board.

5. **Pole installation mounting:**

   a. Use the supplied clamp and screws to mount the transmitter on a pole.

   b. To prevent the transmitter from turning on the pole, tighten the set screw on the center hole of the clamp.

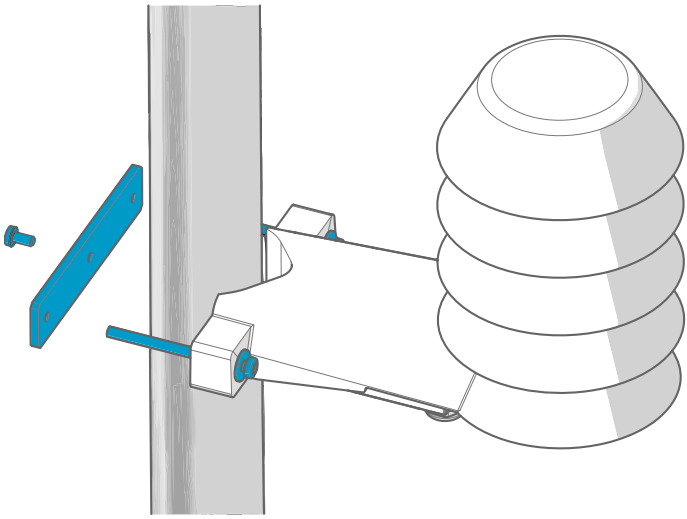

6. **Wall installation mounting:**
   a. Drill two holes for wall plugs 100 mm apart.
   b. Place the wall plugs in the holes.
   c. Mount the transmitter using two screws of sufficient length.

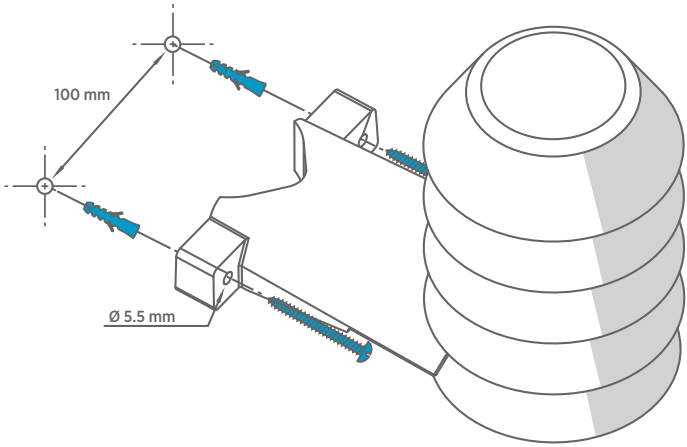

7. Plug in the screw terminal blocks, close the cover, and tighten the screws.

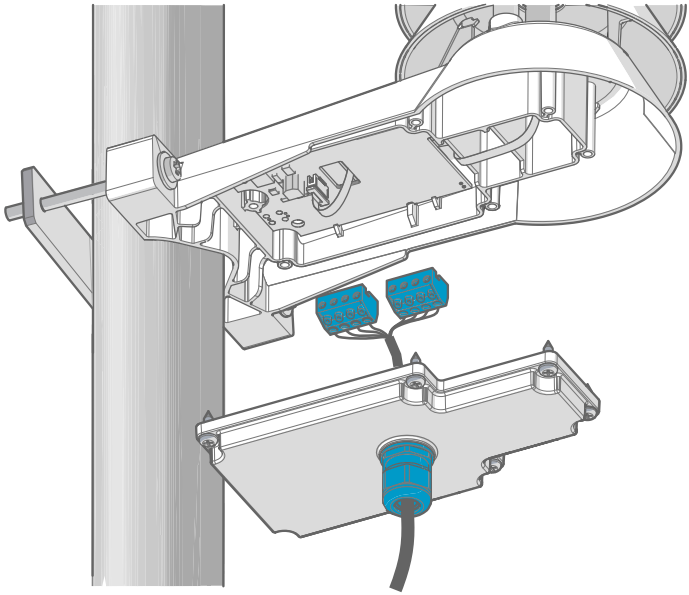

8. Secure the cable to the pole using a zip tie, or on the wall using cable clips. Allow some cable to hang down from the cable gland to prevent water from entering the transmitter along the cable.

3.5 TMI110 installation

- Medium size crosshead screwdriver (Pozidriv) for the screws on the cover
- Tools for cutting and stripping wires
- 19-mm open-end wrench for tightening the cable gland
- Heat transfer paste
- Thermowell installed in the pipe

When mounting TMI110 to measure the temperature of liquid:

- Always install the transmitter in a thermowell. Use heat transfer paste inside the thermowell.
- Position the sensor close to the center of the pipe.
- Prefer a site where the transmitter can be installed horizontally, onto the side of the pipe. The thermowell should be installed in such a position that any condensation can run off.

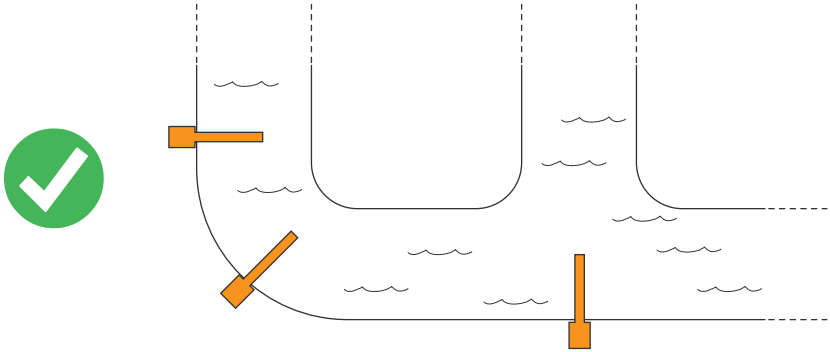

Figure 10 Recommended installation locations for thermowell

1. Insert a small amount of heat transfer paste into the thermowell.

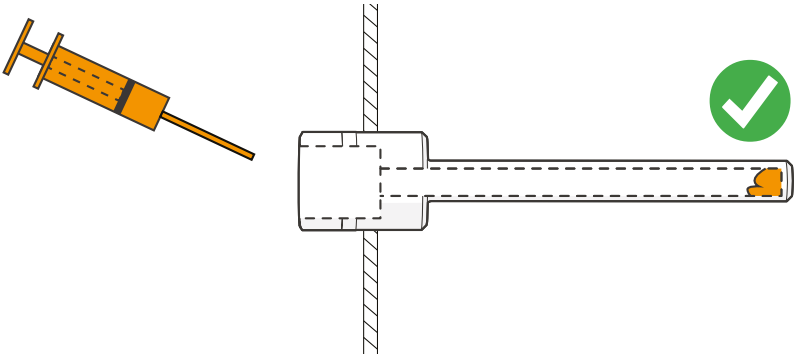

2. Insert the probe into the thermowell.

NOTICE! The maximum tightening torque for the thermowell screw is 1.5 Nm. Overtightening the thermowell screw can damage the probe. If there is vibration present in the installation environment and additional tightening is necessary, use a low-strength thread locker.

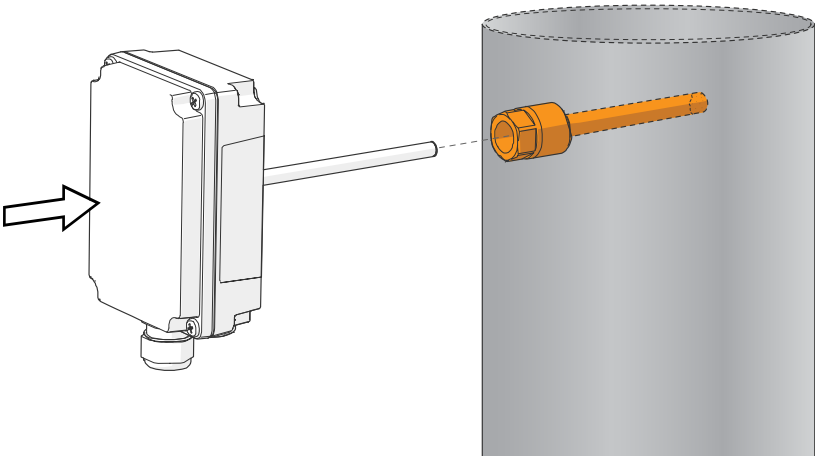

3. Open the cable gland and the screws that hold the transmitter cover.

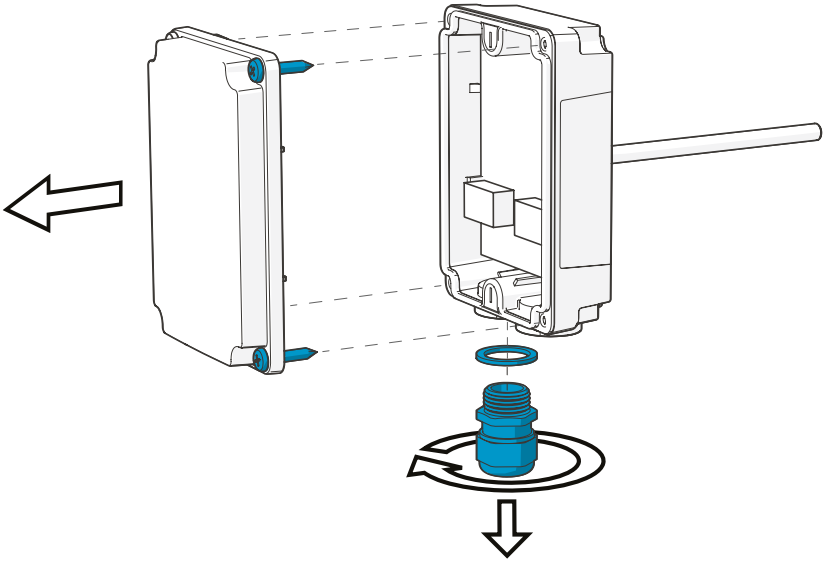

4. Route the power and signal cables through the cable gland and the sealing ring, and connect the wires to the screw terminals according to the wiring instructions:
   - Wiring devices with analog output (page 32)
   - Wiring devices with Modbus output (page 33)
5. Adjust the length of the cables between the cable gland and the terminal blocks. Make the cables short enough to close the cover without leaving a cable loop in the transmitter.

6. Tighten the cable gland and close the transmitter cover.

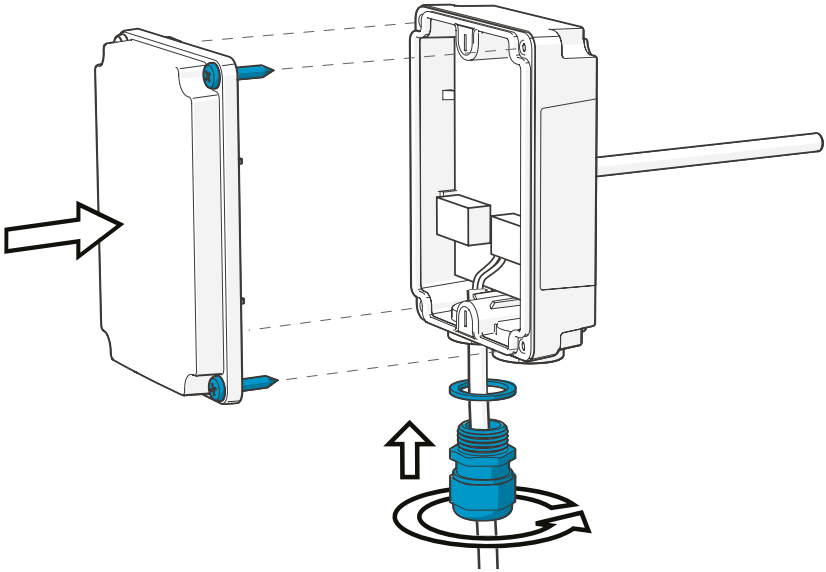

3.6 Wiring devices with analog output

HMDW110 series transmitters are designed for a supply voltage range of 10–28 V DC. The minimum required voltage depends on the loop resistance (0–600 Ω) as shown below.

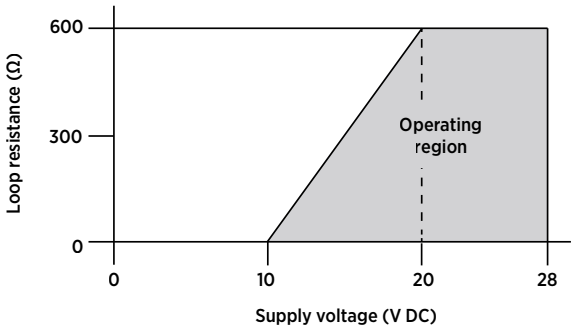

Figure 11 HMDW110 series supply voltage operating region

With HMDW110 series transmitters ordered with analog output, you must always connect the first current loop (terminals 5 and 6) to power the transmitter. With models HMD110/112, HMW110/112, and HMS110/112, connecting the second current loop (terminals 7 and 8) is optional.

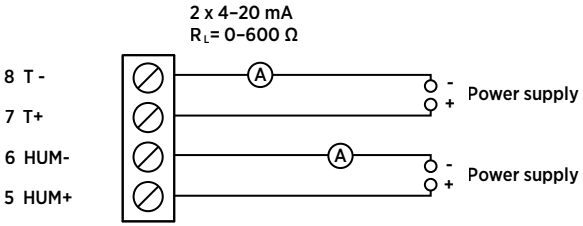

Figure 12 HMD110/112, HMW110/112, and HMS110/112 wiring example, analog output

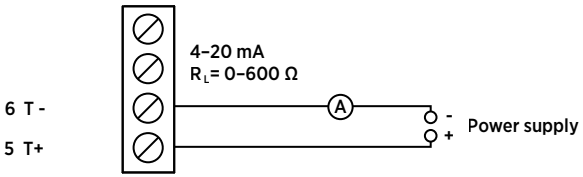

Figure 13 TMI110, TMW110, and TMD110 wiring, analog output

3.6.1 Wiring both current loops with a single power supply

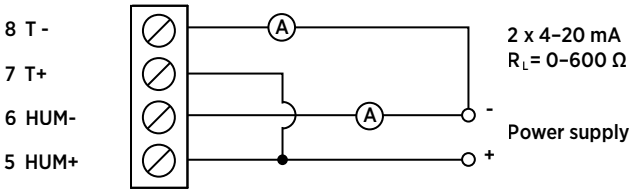

Figure 14 HMD110/112, HMW110/112, and HMS110/112 wiring with single power supply

3.7 Wiring devices with Modbus output

Use terminals 1–4 for supply power and Modbus output. In addition to RS-485 data wires, the common wire (ground reference) must be connected between the RS-485 host and the transmitter.

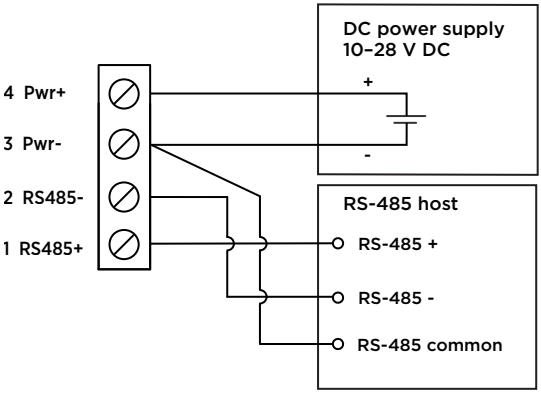

Figure 15 HMDW110 series transmitter wiring, Modbus output

Do not connect the analog outputs (terminals 5–8) at the same time when supply power and/or Modbus output is connected to terminals 1–4. Having both terminals connected simultaneously may result in erroneous analog readings caused by effects of possible ground loop.

3.8 M12 connector pinout and wiring (HMW110 and TMW110)

HMW110 and TMW110 transmitters can be ordered either with a cable gland with screw terminal wiring, or with an M12 connector (4-pin male). The pin order for analog and Modbus output options is listed in Table 4 (page 34), Table 5 (page 35), and Table 6 (page 35).

An M12-4F / M8-4M connection cable (length: 1.2 m (3.94 ft)) is available as an accessory (Vaisala item code: 279222SP).

Table 4 Modbus output M12 connector pinout

Connector pinout	Pin	Function
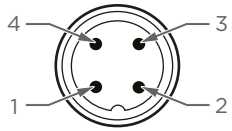	Pin 1	V +
	Pin 2	RS485 -
	Pin 3	GND
	Pin 4	RS485 +

Table 5 HMW110 analog output M12 connector pinout

Connector pinout	Pin	Function
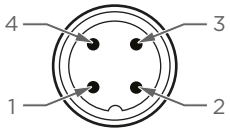	Pin 1	Humidity +
	Pin 2	Temperature +
	Pin 3	Humidity -
	Pin 4	Temperature -

Table 6 TMW110 analog output M12 connector pinout

Connector pinout	Pin	Function
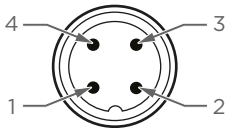	Pin 1	Not connected
	Pin 2	Temperature +
	Pin 3	Not connected
	Pin 4	Temperature -

4. Modbus communication

Transmitters ordered with the Modbus configuration option are accessed using the Modbus serial communication protocol. The supported Modbus variant is Modbus RTU (Serial Modbus) over RS-485 interface.

The supported Modbus functions and registers are described in Modbus reference (page 88).

The following table lists the default Modbus serial communication settings of devices ordered with the Modbus configuration option.

Table 7 Default Modbus serial communication settings

Description	Default Value
Serial bit rate	19200
Parity	N
Number of data bits	8
Number of stop bits	2
Modbus device address	240
Serial delay	0
Communication mode	Modbus RTU

Use Vaisala Insight software to change the Modbus serial communication settings if needed. Download Insight software at www.vaisala.com/insight.

More information

- Vaisala Insight PC software (page 37)

5. Vaisala Insight PC software

Vaisala Insight PC software is a configuration and calibration software for Vaisala devices. Insight is available for the Windows operating system (64-bit only). For a full list of supported operating system versions, see vaisala.com/insight.

You can use Insight to check, configure, and adjust HMDW110 series transmitters intuitively without typing any serial commands. The transmitter can be connected to Insight software using a Vaisala USB service cable (item code 219690).

With the Insight software, you can:

- See device status and information, for example, serial number.
- See real-time measurement.
- Configure serial communication settings, filtering factor, and analog output parameters and scaling.
- Calibrate and adjust the device.

To ensure support for your device, download the latest version of Insight at vaisala.com/insight.

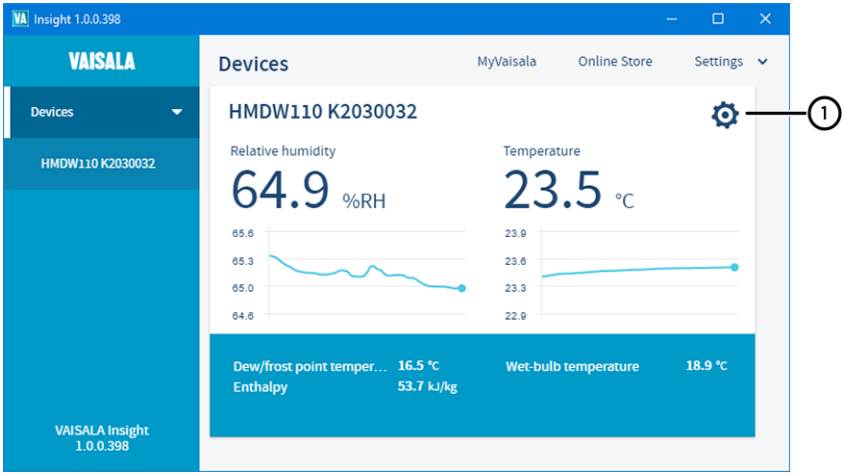

1 HMDW110 settings and adjustment functions are available through the settings wheel in the Insight **Devices** view.

Insight software guides you when changing the settings and performing adjustments on the transmitter. However, please read carefully the chapters on calibration and adjustment in this user guide before performing adjustments on your HMDW110 device.

HMDW110 series transmitters support Insight from transmitter software version 2.2.3 onwards.

5.1 Connecting to Insight PC software

- Computer with Vaisala Insight software installed
- USB service cable (item code 219690)

When connecting several devices at the same time, note that your computer may not be able to supply enough power through its USB ports. Use an externally powered USB hub that can supply >2 W for each port.

Before connecting the transmitter to a PC:
- If the terminal block for terminals 5–8 is wired, pull it out. This disconnects the transmitter from supply voltage and prevents possible equipment damage that may be caused by ground loops. For the locations of the terminal blocks and the service port, see the component board description.
- If the other terminal block is wired (terminals 1–4), pull it out also. This prevents the communication between the transmitter and the Modbus (RS-485) host from interfering with your connection.

1. Open the Insight software on your computer.
2. Connect the USB cable to a free USB port on the PC.
3. Connect the USB cable to the service port of the transmitter.
4. Wait for Insight software to detect the transmitter.

   If the transmitter is not detected, disconnect and reconnect the Vaisala USB cable to the service port connector of the transmitter.

5.2 Installing driver for USB service cable

Only Windows® operating systems are supported by the driver of the USB service cable.

1. Connect the USB service cable to a USB port on your computer. Windows detects the new device and installs the appropriate driver.

2. Open **Device Manager** from the Windows **Start** menu. Use search to find it if necessary (search for "device").
3. Locate the cable in the list of devices:
   - If the device is listed as **Vaisala USB Device** with a COM port number in brackets, the cable is ready for use.
   - If the device is listed as **Vaisala USB Instrument Cable** without a COM port number listed, you must install the driver manually.

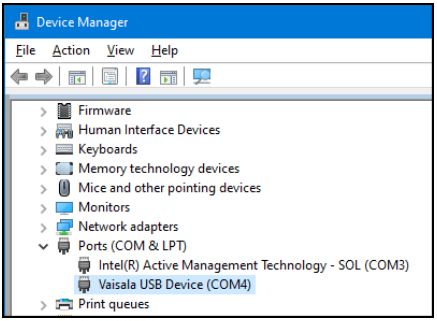

4. To install the driver manually:
   a. Disconnect the USB service cable from the computer.
   b. Download the Vaisala USB driver at vaisala.com/software (select the appropriate USB Instrument Driver Setup for your cable).
   c. Extract the driver zip file and run the USB driver installation program *`Vaisala USB Device Driver Setup.exe`*. Accept the installation defaults.
   d. Go back to step 1 and verify that the driver installation works as expected.

6. Using service port with terminal application

6.1 Connecting to service port

- Computer with
  - Windows operating system
  - Terminal application
  - Free USB port
  - Driver for Vaisala USB cable installed
- Vaisala USB cable for computer connection (219690)

The service port is intended for a temporary connection to the transmitter. You can use it for configuration, calibration, and troubleshooting using a computer.

The RS-485 line of the service port is shared with the connection to RS-485 Modbus output; the M8 service port connector is just an additional connector for easier access. Before plugging in the Vaisala USB cable (219690) to the service port, perform the following steps:

1. Open the cover of the HMDW110 series transmitter.
2. If the terminal block for terminals 5–8 is wired, pull it out. This disconnects the transmitter from supply voltage and prevents possible equipment damage that may be caused by ground loops. The locations of the terminal blocks and the service port are shown in HMDW110 series component boards (page 19).
3. If the other terminal block is wired (terminals 1–4), pull it out also. This prevents the communication between the transmitter and the Modbus (RS-485) host from interfering with your connection.

6.2 Terminal application settings

You need a terminal application to be able to use the service port commands of the HMDW110 series transmitter. You can download the PuTTY terminal application from http://www.vaisala.com/en/search/download or use a terminal application of your choice.

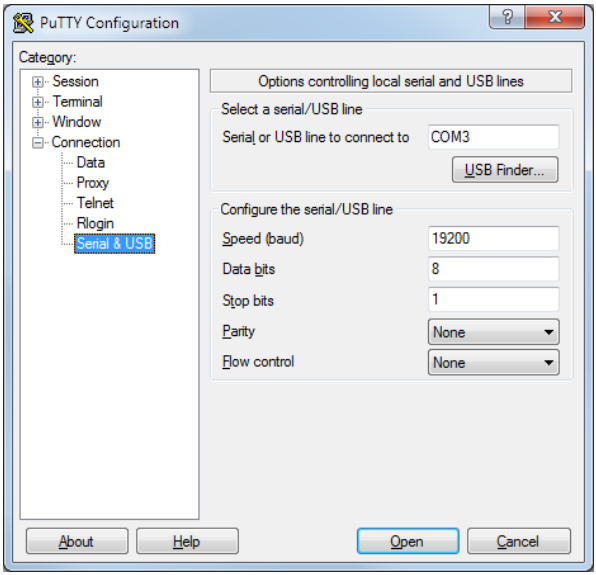

Figure 16 PuTTY terminal application

Before starting a terminal session, you must set the following parameters:

- **Serial line settings**. The default serial line settings of a HMDW110 series transmitter are **19200 N 8 1**:
  - 19200 bits per second
  - No parity
  - Eight data bits
  - One stop bit
- **Number of the virtual COM port** that has been created for your cable by the Vaisala USB driver.
  You can check which port the USB cable is using with the **Vaisala USB Device Finder** application that has been installed in the Windows **Start** menu. You can also access the USB finder directly from the Vaisala-supplied PuTTY application by selecting **USB Finder...** on the **Serial & USB** tab.

6.3 Accessing service port command interface in devices with Modbus output

Follow the steps below to connect to the serial line with a transmitter with Modbus output. You can also use the procedure to retrieve the communication settings of your device, if you do not know them. You must use the Vaisala USB cable (Vaisala order code: 219690) for the connection.

- Computer with
  - Windows operating system
  - Terminal application
  - Free USB port
  - Driver for Vaisala USB cable installed
- Vaisala USB cable for computer connection (219690)

1. Connect the USB cable to the PC and install the driver, if necessary. Do not connect the cable to the transmitter yet.
2. Open the terminal program and open a connection to the corresponding COM port using the default settings **19200**, **8**, **N**, **1**, no flow control.
3. Keep the **Enter** key pressed down and connect the other end of the USB cable to the transmitter. This will cause the transmitter to start in serial mode, using the default serial settings.

   You can now use the transmitter with the terminal program.

To prevent Modbus mode from being restored on the next power-up, select a different serial mode with the **`smode`** command.

More information

- Serial commands (page 42)
- Serial line communication (page 51)

6.4 Serial commands

The notation `<cr>` refers to the carriage return control character, which you can send in a terminal application by pressing **Enter** on your keyboard. Before entering commands, send a `<cr>` to clear the command buffer.

You can enter the commands in uppercase or lowercase. In the command examples, the keyboard input by the user is in **bold** type.

Table 8 HMDW110 serial commands

Command	Description
Device information and status	
`?`	Show device information.
`??`	Show device information (will respond in poll mode).
`errs`	Show active errors.
`help`	Show list of serial commands.
`system`	Show firmware information.

Command	Description
`time`	Show transmitter uptime (time since last reset).
Serial line output and communication	
`addr`	Show or set device address.
`close`	Close connection to device in POLL mode.
`form`	Set output format of measurement messages.
`intv`	Set measurement output interval.
`open`	Open connection to device in POLL mode.
`r`	Start continuous output of measurement messages.
`s`	Stop continuous output of measurement messages.
`sdelay`	Show or set serial line turnaround delay.
`send`	Output one measurement message.
`seri`	Set serial line settings. Default is **19200 N 8 1**.
`smode`	Set serial line operation mode.
`unit`	Set units to metric (m) or non-metric (n).
Analog output	
`aerr`	Show or set error level for analog output.
`amode`	Show analog output settings.
`aover`	Enable or disable analog output 10% over range.
`asel`	Show or set analog output parameters and scaling.
Calibration and adjustment	
`cdate`	Show or set adjustment date.
`crh`	User calibration for humidity measurement.
`crhclr`	Clear user calibration for humidity measurement. Factory calibration remains.
`ct`	User calibration for T measurement.
`ctclr`	Clear user calibration for temperature measurement. Factory calibration remains.
`ctext`	Show or set adjustment information text.
`fcrh`	Two-point calibration after humidity sensor change.
`l`	Show adjustment offset and gain.
`li`	Set adjustment offset and gain.
Other commands	

Command	Description
filt	Show or set measurement filtering.
frestore	Restore factory settings. Clears all user settings, factory calibration remains.
reset	Reset the device.

6.5 Device information and status

Table 9 ? command

Syntax	Description
?<cr>	Show listing of device information.
??<cr>	Show listing of device information even if device is in poll mode and connection has not been opened using the **open** command.

Example:

```
?
HMDW110 / 1.0.6
Serial number  : H0134007
Batch number   : H0130002
Sensor number  : H0090003
Sensor model   : Humicap 180R
Order code     : HMD1102A1VA1
Cal. date      : 20140619
Cal. info      : VAISALA/HEL
Time           : 01:43:43
Serial mode    : STOP
Baud P D S     : 19200 N 8 1
Output interval: 5 S
Serial delay   : 25
Address        : 0
Filter         : 1.000
Ch1 output     : 4 ... 20 mA
Ch2 output     : 4 ... 20 mA
Ch1 RH lo      : 0.00 %RH
Ch1 RH hi      : 100.00 %RH
Ch2 T lo       : -40.00 'C
Ch2 T hi       : 60.00 'C
```

Table 10 Errs command

Syntax	Description
errs<cr>	Show active error(s). Possible error messages are listed in Error messages in Insight software (page 77).

Syntax	Description
Example (no active errors):	

```
errs
0000h
No errors
```

Table 11 Error messages on ERRS command

ERRS command response	Corresponding error
T MEAS error	Temperature measurement error. [44]
F meas error	Humidity measurement error. [45]
RH sensor failure	Humidity sensor failure. [46]
Frequency measurement outside the permissible value range	Capacitance reference error. [47]
Ambient temperature error	Ambient temperature out of range. [48]
Program flash check sum error	Firmware checksum mismatch. [49]
Parameter flash check sum error	Device settings corrupted. [50]
INFOA check sum error	Additional configuration settings corrupted. [51]
SCOEFS check sum error	Sensor coefficients corrupted. [52]
CURRENT check sum error	Main configuration settings corrupted. [53]
Voltage error	Supply voltage out of range. [55]
General flash failure w/r	Non-volatile memory read/write failure. [57]
Calibration certificate check sum failure	Calibration certificate checksum mismatch. [58]

Refer to Error messages in Insight software (page 77) for more information about the error states.

Table 12 Help command

Syntax	Description
help<cr>	Show list of currently available serial commands.

Syntax	Description
Example:	

```
help
??
?
ADDR
AERR
AMODE
AOVER
ASEL
ATEST
CDATE
CLOSE
CRH
CRHCLR
CT
CTCLR
CTEXT
ERRS
FCRH
FILT
FORM
FRESTORE
HELP
INTV
L
LI
OPEN
R
RESET
S
SDELAY
SEND
SERI
SMODE
SYSTEM
TIME
UNIT
```

Table 13 System command

Syntax	Description
system<cr>	Show firmware information.

Syntax	Description
Example:	

```
system
Device Name : HMDW110
Copyright   : Copyright (c) Vaisala Oyj 2017. All
rights reserved.
SW Name     : HMP113
SW date     : 2018-01-03
SW version  : 2.2.3 HMDW
HW version  :
```

Table 14 Time command

Syntax	Description
time<cr>	Show transmitter uptime (time since last reset) in hh:mm:ss.
Example:	

```
time
Time : 00:54:51
```

6.6 Serial line output and communication

6.6.1 Measurement output

Table 15 Send command

Syntax	Description
send<cr>	Output a single measurement message.
send [aaa]<cr>	Output a single measurement message from the device with the defined address: aaa = address of target device, range 0...255.
Example:	

```
send 5T= 22.8 'C RH= 39.8 %RH Td= 8.4 'C Tw= 14.6 'C h= 40.5 kJ/kg
```

Table 16 R command

Syntax	Description
r<cr>	Start the continuous outputting of measurement values as an ASCII text string to the serial line.

Example (measurement message in default format):

```
r
T= 22.8 'C RH= 39.5 %RH Td= 8.3 'C Tw= 14.5 'C h= 40.4 kJ/kg
T= 22.8 'C RH= 39.5 %RH Td= 8.3 'C Tw= 14.5 'C h= 40.4 kJ/kg
...
```

Table 17 S command

Syntax	Description
s<cr>	Stop the continuous outputting of measurement values.

Example:

```
...
T= 22.8 'C RH= 39.5 %RH Td= 8.3 'C Tw= 14.5 'C h= 40.4 kJ/kg
T= 22.8 'C RH= 39.5 %RH Td= 8.3 'C Tw= 14.5 'C h= 40.4 kJ/kg
s
```

Since the interface is half-duplex, you must enter the **s** command when the device is not outputting.

Table 18 Intv command

Syntax	Description
intv<cr>	Show the output interval of the automatically repeating measurement messages (r command and run mode).
intv [iii u]<cr>	Set the output interval. iii = interval, range 0 ... 255. u = unit for interval setting: • s = seconds • min = minutes • h = hours If you set the interval to 0, the output messages are output as quickly as they are generated, without additional delay.

Syntax	Description
Example:	

```
intv 5 s
Output interval: 5 S
```

6.6.2 Measurement output format

Table 19 Unit command

Syntax	Description
unit<cr>	Show current setting of the unit command.
unit [m|n]<cr>	Set types of units used on the serial line. m = metric units, for example, Celsius n = non-metric units, for example, Fahrenheit
Example (set units to non-metric):	

```
unit n
Units : Non metric
```

Table 20 Form command

Syntax	Description
form<cr>	Show the currently used measurement format.
form /<cr>	Reset measurement format to default.
form [sss]<cr>	Set a new measurement format. sss = String consisting of modifiers and abbreviations for measured parameters. See Table 21 (page 50) and Table 22 (page 50). Maximum length 127 characters.
Example: show currently used measurement format (default format shown):	

```
form
3.1 "T=" T " " U3 3.1 "RH=" RH " " U4 3.1 "Td=" Td " " U3 3.1 "Tw=" Tw
" " U3 4.1 "h=" h " " U7 \r \n
```

Output example:

```
send
T= 25.1 'C RH= 39.4 %RH Td= 10.3 'C Tw= 16.2 'C h= 45.1 kJ/kg
```

Syntax	Description

Example: set output format as RH and T, with start of text (ASCII character 002) and end of text (003) ASCII codes, and without line feed and carriage return at the end:
`form #002 3.1 "RH=" RH U4 3.1 "T=" T " " U3 #003`
`OK`
Output example (ASCII codes not visible here):
`send`
`RH= 39.3%RH T= 25.1 'C`	

Table 21 Output parameters for form command

Measured parameter	Abbreviation in form command
Temperature	t
Relative humidity	rh
Dew point	td
Enthalpy	h
Wet bulb temperature	tw

Table 22 Modifiers for form command

Modifier	Description
x.y	Length modifier (number of digits and decimal places)
\t	Tabulator
\r	Carriage return
\n	Line feed
\xxx	ASCII character with decimal code xxx
""	String constant
ux	Name of the measurement unit using x number of characters. For example, u3 shows the name of the measurement unit with three characters.
addr	Transmitter address
sn	Transmitter serial number
time	Time since transmitter was started or reset

Modifier	Description
cs4	Modulus-65536 checksum of message sent so far, ASCII encoded hexadecimal notation
csx	NMEA xor-checksum of message sent so far, ASCII encoded hexadecimal notation

You can also use the hash character # instead of the backslash character \.

6.6.3 Serial line communication

Table 23 Open command

Syntax	Description
open [aaa]<cr>	Open a connection to a device at the specified address. Required when device is in poll mode. Address range 0 ... 255.
Example:	

```
open 5
HMDW110 5 line opened for operator commands
```

Table 24 Close command

Syntax	Description
close<cr>	Close the connection that was opened with the open command.
Example:	

```
close
line closed
```

Table 25 Addr command

Syntax	Description
addr<cr>	Show current device address and prompt for a new address.
addr [aaa]<cr>	Set new device address. aaa = 0 ... 255.

Syntax	Description
Example (shows 0 as current address, enter 5 as the new address):	
`addr` `Address : 0 ? 5`	

Table 26 Seri command

Syntax	Description
seri<cr>	Show current serial line settings.
seri [baud p d s]<cr>	Set new serial line settings for RS-485 line (also affects the service port). The new settings are taken into use when the device is reset or powered up. **baud** = baud rate (300, 600, 1200, 2400, 4800, 9600, 19200, 38400, or 57600) [1)] **p** = parity • n = none • e = even • o = odd **d** = data bits (7 or 8) **s** = stop bits (1 or 2)
Example (show current serial line settings):	
`seri` `Baud P D S : 19200 N 8 1`	

1) *Modbus output works only with baud rate 9600 and above.*

Table 27 Sdelay command

Syntax	Description
sdelay<cr>	Show serial line delay (response time).
sdelay [ddd]<cr>	Set serial line delay (response time). ddd = delay, range 0 ... 255. Corresponds to 0 ... 1020 milliseconds.
Example (set serial line delay to 200 milliseconds):	
`sdelay 50` `Serial delay : 50`	

Table 28 Smode command

Syntax	Description
smode<cr>	Show current start-up operating mode of the serial line, and prompt to enter new mode. New mode is taken into use when the device is reset or powered up.
smode [mode]<cr>	Set serial line start-up operating mode. Available modes are: **stop** = No automatic output. All commands available. Default mode. **run** = Automatic output of measurement messages. You must stop output with the s command before entering other commands. **poll** = No automatic output. Will respond to addressed **send** command and **??** command. You can use other commands after opening a connection using an addressed open command. **Modbus** = No automatic output. Measurement outputs must be read from the transmitter using the Modbus protocol.

Example (set device to poll mode):
`smode`
`Serial mode : STOP ? poll`	

More information

- Modbus communication (page 36)
- Modbus registers (page 89)

6.7 Analog output

Table 29 Aerr command

Syntax	Description
aerr ?<cr>	Show currently set analog output error level for both channels.
aerr<cr>	Show currently set analog output error levels, prompt to enter new values.

Syntax	Description
aerr [ch1] [ch2]<cr>	Set error level for both channels without prompting. ch1 = error level for analog output channel 1 in mA. ch2 = error level for analog output channel 2 in mA.
Example (set error level for both analog output channels to 21 mA): **aerr** Ch1 error out : 3.600 I ? **21** Ch2 error out : 3.600 I ? **21**	

Table 30 Amode command

Syntax	Description
amode<cr>	Show currently set analog output mode.
Example: **amode** Ch1 output : 4 ... 20 mA Ch2 output : 4 ... 20 mA	

Table 31 Aover command

Syntax	Description
aover<cr>	Show current aover status.
aover [on|off]<cr>	Set analog output overrange to: on = Allow output to exceed the scaled range by 10 %. off = Keep the analog output always in the scaled range. Note that error state behavior overrides this setting.
Example (enable 10 % overrange for analog outputs): **aover on** AOVER : ON	

Table 32 Asel command

Syntax	Description
asel ?<cr>	Show currently set analog output parameters and scaling.
asel<cr>	Show currently set analog output parameters and scaling, prompt to enter new scaling values.
asel [ch1 ch2]<cr>	Set new output parameters for both channels, prompt to enter new scaling values. Selectable parameters for ch1 and ch2 are: t = temperature rh = relative humidity td = dew point h = enthalpy tw = wet bulb temperature
asel [ch1 ch2 [ch1lo ch1hi ch2lo ch2hi]]<cr>	Set analog output parameters and scaling for both channels without prompting. ch1 = Output parameter for channel 1. Parameters as above. ch2 = Output parameter for channel 2. Parameters as above. ch1lo = Low limit for channel 1 scaling. ch1hi = High limit for channel 1 scaling. ch2lo = Low limit for channel 2 scaling. ch2hi =High limit for channel 2 scaling.

Example (show current analog output parameters and scaling):

```
asel ?
Ch1 RH lo : 0.00 %RH
Ch1 RH hi : 100.00 %RH
Ch2 T lo : -40.00 'C
Ch2 T hi : 60.00 'C
```

6.8 Calibration and adjustment commands

CAUTION! Before using the calibration and adjustment commands, read through Calibration and adjustment (page 61).

Table 33 Cdate command

Syntax	Description
cdate<cr>	Show currently stored calibration date.
cdate [yyyymmdd]<cr>	Set a new calibration date. yyyymmdd = Date in format year (yyyy) month (mm) date (dd).

Example (set calibration date to June 1st, 2018):
`cdate 20180601`
`Cal. date : 20180601`	

Table 34 Crh command

Syntax	Description
crh<cr>	Start the two-point humidity calibration and adjustment sequence. For a full adjustment procedure, see Two-point humidity calibration and adjustment using computer and HMK15 Humidity Calibrator (page 66).
crh [ref]<cr>	Perform a one-point adjustment at the current relative humidity. The device calculates the required correction based on the reference humidity that you enter. ref = the correct relative humidity at the environment where the sensor is now.

Example :
`crh`
`RH : 11.5379 1. ref ? 11.3`
`Press any key when ready ...`
`RH : 74.9684 2. ref ? 75.4`
`OK`	

Table 35 Crhclr command

Syntax	Description
crhclr<cr>	Clear the current user adjustment for humidity. Factory calibration remains.

Example:
`crhclr`
`OK`	

Table 36 Ct command

Syntax	Description
ct<cr>	Start the two-point temperature calibration and adjustment sequence. For a full adjustment procedure, see Two-point temperature calibration and adjustment using computer (page 69).
ct [ref]<cr>	Perform a one-point adjustment at the current temperature. The device calculates the required correction based on the reference temperature that you enter. ref = the correct temperature (in degrees Celsius) at the environment where the sensor is now.

Example :

```
ct
T : 22.9424 1. ref ? 23.0
Press any key when ready ...
T : 54.9873 2. ref ? 55
OK
```

Table 37 Ctclr command

Syntax	Description
ctclr<cr>	Clear the current user adjustment for temperature. Factory calibration remains.

Example:

```
ctclr
OK
```

Table 38 Ctext command

Syntax	Description
ctext<cr>	Show currently stored calibration text.
ctext [sss]<cr>	Set a new calibration text. sss = Text string, maximum length 24 characters.

Example (set calibration text to Lab1/John):

```
ctext Lab1/John
Cal. info : Lab1/John
```

Table 39 Fcrh command

Syntax	Description
fcrh<cr>	Start the two-point humidity calibration and adjustment sequence. If you have changed the humidity sensor of the device yourself, you must perform a two-point humidity calibration and adjustment using this command. Follow the procedure in Two-point humidity calibration and adjustment using computer and HMK15 Humidity Calibrator (page 66).

Example:

```
fcrh
RH : 11.3143 1. ref ? 11.3
Press any key when ready ...
RH : 75.0012 2. ref ? 75.4
OK
```

Table 40 L command

Syntax	Description
l<cr>	Show the current offset and gain parameters for user adjustment. This command is useful for checking if user adjustments have been applied for humidity and temperature measurement.

Example (shows default state without user adjustments - offset is 0 and gain is 1 for both humidity (Cp offset and gain) and temperature):

```
l
Cp offset : 0.00000000E+00
Cp gain : 1.00000000E+00
T offset : 0.00000000E+00
T gain : 1.00000000E+00
```

Table 41 Li command

Syntax	Description
li<cr>	Enter values for offset and gain parameters for user adjustment. Useful for restoring some earlier state of user adjustment. Use this command only to restore values you have previously written down based on the output from the l command, or to restore the default offset and gain.

Syntax	Description

Example (shows adjustment has been applied to humidity measurement offset, overwrites it with 0):
`li`
`Cp offset : -1.50922060E-01 ? 0`
`Cp gain : 1.00000000E+00 ?`
`T offset : 0.00000000E+00 ?`
`T gain : 1.00000000E+00 ?`	

6.9 Other commands

Table 42 Filt command

Syntax	Description
filt [f.fff]<cr>	Set the speed at which the latest measurement result is integrated into the humidity and temperature readings. The command affects both analog output and serial line output. f.fff = Measurement filtering setting, range 0.001 ... 1.0. • 1.0 = No filtering, latest measurement is output without averaging • 0.5 = Average of last two measurements • 0.1 = Average of approximately 16 measurements
filt<cr>	View the current setting. Also prompts you to enter a new value.

Example (view the current value and set filtering to value 0.5):
`filt`
`Filter : 1.000 ? 0.5`	

Table 43 Frestore command

Syntax	Description
frestore<cr>	Restores the factory default settings. All user-made settings are lost, including user calibration. Reset the transmitter after giving this command. If you have replaced the HUMICAP® humidity sensor of the device yourself, you must redo the two-point humidity calibration using the FCRH command after performing a factory reset.

Example:

```
frestore
Factory settings restored
reset
HMDW110 / 2.2.3
```

Table 44 Reset command

Syntax	Description
reset<cr>	Resets the device.

Example:

```
reset
HMDW110 / 2.2.3
```

7. Maintenance

7.1 Cleaning

The body of the transmitter can be cleaned by wiping with a moistened lint-free cloth. Do not use cleaning agents or solvents, or blow pressurized air into the transmitter housing or on the filter.

Do not attempt to clean contaminated HUMICAP® sensors or filters. Instead, replace them with new parts. Filters and sensors can be purchased from Vaisala.

More information

- Spare parts and accessories (page 86)

7.2 Calibration and adjustment

Calibration means comparing the instrument to a known reference, either against a second instrument or a known reference environment. Correcting the reading of the instrument so that it measures accurately is referred to as **adjustment**.

HMDW110 series transmitters are fully calibrated as shipped from the factory.

Vaisala recommends sending the transmitter regularly to Vaisala for factory calibration. The transmitter is calibrated and adjusted at multiple points along its measurement range. Factory calibration always includes a traceable calibration certificate and adjustment, if needed.

You can use the service port to calibrate and adjust the humidity and temperature measurement of the transmitter as needed. If you think the transmitter is not measuring correctly, check the following before starting any calibration and adjustment procedure:

- Always wait for measurement instruments to stabilize in the ambient temperature. Temperature differences are a major source of measurement error.
- Check that there are no heat or moisture sources near the transmitter.
- Check that the transmitter is not in direct sunlight or close to the discharge of the supply air ducts.
- Check that there is no moisture on the probe. If the sensor has become wet, you must allow it to dry before you can measure.

Factory calibration leads to highest accuracy and lowest uncertainty. After factory calibration the instrument performs as new. For up-to-date information about calibration points and offering, visit store.vaisala.com.

More information

- Maintenance and calibration services (page 95)

7.2.1 Adjustment types

You can perform a one-point calibration and adjustment with Vaisala handheld meters that utilize the MI70 measurement indicator (for example, HM70).

Connecting to the service port using a computer and a terminal program allows you to perform calibration and adjustment tasks using serial commands. You can, for example, perform a two-point humidity calibration and adjustment, or clear the existing user adjustments (factory calibration will remain).

If you replace the HUMICAP® humidity sensor of the transmitter, you must perform the two-point humidity calibration afterwards.

More information

- Calibration and adjustment commands (page 55)
- Calibration and adjustment using handheld meter and reference probe (page 63)
- One-point humidity calibration and adjustment using handheld meter and HMK15 Humidity Calibrator (page 64)
- Two-point humidity calibration and adjustment using computer and HMK15 Humidity Calibrator (page 66)
- Two-point temperature calibration and adjustment using computer (page 69)

7.2.2 Adjustment points

HMDW110 series transmitters have two adjustment points for both humidity measurement and temperature measurement:

- The first point (low point) affects offset across the entire measurement range. For humidity adjustment, the low point must be < 50 %RH.
- The second point (high point) affects measurement gain. For humidity adjustment, the high point must be > 50 %RH.

Additionally, two-point humidity calibration requires that the difference between the two points is ≥ 30 %RH.

Temperature adjustment points must be in range -40 ... +60 °C (-40 ... +140 °F) with more than 30 °C (86 °F) difference.

7.3 Calibration and adjustment using handheld meter and reference probe

- A fully charged Vaisala MI70 indicator (the measurement display that is included in the HM70 package)
- A calibrated reference probe that is compatible with the MI70 indicator (for example, HMP75) and its MI70 connection cable, if not integrated with the probe
- Connection cable for HM70 handheld meter (219980SP)
- Medium size crosshead screwdriver (Pozidriv).

1. Insert the reference probe in the same environment as the probe of the HMDW110 series transmitter. You can also perform this procedure in the ambient environment, as long as it is reasonably stable.
2. Connect the reference probe to port I of the MI70 indicator (the measurement display that is included in the HM70 package).
3. Prepare the HMDW110 series transmitter for a service port connection.
   a. Open the cover of the HMDW110 series transmitter.
   b. If the terminal block for terminals 5–8 is wired, pull it out.

      This disconnects the transmitter from supply voltage and prevents possible equipment damage that may be caused by ground loops. The locations of the terminal blocks and the service port are shown in HMDW110 series component boards (page 19).
   c. If the other terminal block is wired (terminals 1–4), pull it out also.

      This prevents the communication between the transmitter and the Modbus (RS-485) host from interfering with your connection.
4. Plug in connection cable 219980SP to the service port of the HMDW110 series transmitter, and the other end to port II of the MI70 indicator.
5. Turn on the MI70 indicator.
6. Check and adjust the environment settings of the reference probe if prompted by the MI70.
7. Select **Functions > Adjustments (II)** from the menu of the MI70, then select **Start**. Make sure the symbol for port II is shown after the word "Adjustments", as your reference probe may also be adjustable using the MI70.
8. The adjustment mode starts. Select **OK**.
9. Select the parameter for adjustment. You can only adjust relative humidity (RH) or temperature (T). The rest of the parameters are calculated based on RH and T and can only be viewed.
10. Check and adjust the environment settings of the reference probe if prompted by the MI70.

11. The adjustment mode now shows the value of the selected parameter from both instruments, and a delta parameter (for example, **ΔRH**) that shows the difference between the two.

    Wait at least 15 minutes for the measurement to stabilize, and for the value of the delta parameter to stop changing. Stabilization may take a much longer time, depending on factors such as temperature differences and airflow around the sensors.
12. The difference between the reading should be no greater than the combined measurement uncertainty of the HMDW110 series transmitter and the reference probe.

    Depending on the result, proceed as follows:
    - If the HMDW110 series transmitter is within its accuracy specification, there is no need to proceed with the adjustment. Select **Back > Exit** to leave the adjustment mode.
    - If adjustment is required, continue with the next step.
13. Select **Adjust > To same as RH (I)**
14. The MI70 will ask **Do you really want to adjust?**. Select **Yes**.

    MI70 shows the text **Adjustment done** and returns to the adjustment mode after a few seconds.
15. Check the value of the delta parameter to verify that the adjustment has taken effect.
16. Select **Back** to return to the parameter selection screen.
17. Select a new parameter for adjustment and proceed as instructed above, or select **Exit** to leave the adjustment mode.
18. Turn off the MI70 indicator and disconnect the connection cable from the service port.
19. Reconnect the terminal blocks and close the cover.

More information

- Error codes in MI70 handheld indicator (page 78)

7.4 One-point humidity calibration and adjustment using handheld meter and HMK15 Humidity Calibrator

- A fully charged Vaisala MI70 indicator (the measurement display that is included in the HM70 package)
- Vaisala HMK15 Humidity Calibrator with the preferred salt solution prepared (for example, LiCl (11 %RH) or NaCl (75 %RH))
- Connection cable for HM70 handheld meter (219980SP)
- Medium size crosshead screwdriver (Pozidriv)

1. Prepare the HMDW110 series transmitter for a service port connection.
   a. Open the cover of the HMDW110 series transmitter.
   b. If the terminal block for terminals 5–8 is wired, pull it out.

      This disconnects the transmitter from supply voltage and prevents possible equipment damage that may be caused by ground loops. The locations of the terminal blocks and the service port are shown in HMDW110 series component boards (page 19).
   c. If the other terminal block is wired (terminals 1–4), pull it out also.

      This prevents the communication between the transmitter and the Modbus (RS-485) host from interfering with your connection.
2. Plug in the connection cable 219980SP to the service port of the HMDW110 series transmitter, and the other end to port I of the MI70 indicator. If any other probes are connected to the MI70, disconnect them.
3. Remove the filter on the probe. This exposes the sensors to damage, so handle the transmitter carefully.
4. Unplug the Ø12 mm hole on the HMK15 salt jar and insert the probe.
5. Wait at least 15 minutes for humidity to stabilize.

   Stabilization may take a much longer time if there are temperature differences or the salt solution is freshly made.
6. Turn on the MI70 indicator.
7. Select **Functions > Adjustments** from the menu of the MI70, then select **Start**.
8. The adjustment mode starts. Select **OK**.
9. Select RH as the parameter to be adjusted.
10. The adjustment mode should now show a stable, unchanging RH value. The difference between the measured value and the reference humidity of the jar should not be greater than the combined measurement uncertainty of the HMDW110 series transmitter and the salt jar.

    Depending on the result, proceed as follows:
    - If the HMDW110 series transmitter is within its accuracy specification, there is no need to proceed with the adjustment. Select **Back > Exit** to leave the adjustment mode.
    - If adjustment is required, continue with the next step.
11. Select **Adjust > 1-point adjustment**.
12. Select **Ready**, and use the arrow buttons to enter the correct RH value of the salt jar.

    Select **OK** when done.
13. The MI70 will ask **Do you really want to adjust?**. Select **Yes**.

    MI70 shows the text **Adjustment done** and returns to the adjustment mode after a few seconds.

14. Select **Back** to return to the parameter selection screen, and **Exit** to leave the adjustment mode.
15. Remove the probe from the salt jar and reconnect the filter. Plug the hole on the salt jar.
16. Turn off the MI70 indicator and disconnect the connection cable from the service port.
17. Reconnect the terminal blocks and close the cover.

More information

- Error codes in MI70 handheld indicator (page 78)

7.5 Two-point humidity calibration and adjustment using computer and HMK15 Humidity Calibrator

You can also use Vaisala Insight software for performing calibration and adjustment. See Vaisala Insight PC software (page 37).

- Computer with
  - Windows operating system
  - Terminal application
  - Free USB port
  - Driver for Vaisala USB cable installed
- Vaisala USB cable for computer connection (219690)
- Vaisala HMK15 Humidity Calibrator with LiCl (11 %RH) and NaCl (75 %RH) salt solutions prepared.
  Other solutions may be used, but the difference between the two points must be ≥ 30 %RH. Additionally, one solution must be < 50 %RH, and the other must be > 50 %RH.
- Medium size crosshead screwdriver (Pozidriv)

If you have changed the HUMICAP® humidity sensor of the transmitter, perform the procedure below so that you use the **FCRH** command instead of the **CRH** command.

1. Prepare the HMDW110 series transmitter for a service port connection.
   a. Open the cover of the HMDW110 series transmitter.
   b. If the terminal block for terminals 5–8 is wired, pull it out.

      This disconnects the transmitter from supply voltage and prevents possible equipment damage that may be caused by ground loops. The locations of the terminal blocks and the service port are shown in HMDW110 series component boards (page 19).
   c. If the other terminal block is wired (terminals 1–4), pull it out also.

      This prevents the communication between the transmitter and the Modbus (RS-485) host from interfering with your connection.
2. Plug in connection cable 219690 to the service port of the HMDW110 series transmitter, and the other end to a free USB port on your computer.
3. Remove the filter on the probe. This exposes the sensors to damage, so handle the transmitter carefully.
4. Unplug the Ø12 mm hole on the LiCl (11 %RH) salt jar and insert the probe.
5. Wait at least 15 minutes for humidity to stabilize. Stabilization may take much longer if there are temperature differences or the salt solution is freshly made.
6. Start a terminal application on the computer and open a new terminal session to the transmitter. For more information, see Terminal application settings (page 40).
7. Give the `errs` and `send` commands to check that there are no active errors, and that the measurement is working:

```
errs
0000h
No errors

send
T= 23.1 'C RH= 11.5 %RH Td= -7.3 'C Tw= 9.9 'C h= 28.5 kJ/kg
```

8. Give the `l` command to view the currently active user adjustment parameters.

   Example: Default values of the user adjustment parameters (no user adjustment done):

```
Cp offset  : 0.00000000E+00
Cp gain    : 1.00000000E+00
T offset : 0.00000000E+00
T gain     : 1.00000000E+00
```

9. Give the `crh` command to start the calibration and adjustment sequence.

   The transmitter shows the measured RH value and prompts you to enter the real humidity of the first reference point.

```
crh
RH : 11.5378 1. ref ?
```

10. Press **Enter** to refresh the measured value (to see if the measurement is now stable). When it is, enter the value of the first reference point and press **Enter**.

```
RH : 11.5378 1. ref ? <cr>
RH : 11.5379 1. ref ? <cr>
RH : 11.5379 1. ref ? 11.3
Press any key when ready ...
```

> To exit the procedure without adjusting the measurement, press the **Esc** key on your keyboard.

11. Transfer the probe to the NaCl (75 %RH) salt jar. Plug the hole on the LiCl (11 %RH) jar.
12. Wait for the humidity to stabilize. Press **Enter** on the keyboard to refresh the measured value:

```
Press any key when ready ...
RH : 74.6984 2. ref ? <cr>
RH : 74.7173 2. ref ? <cr>
```

13. When the measurement is stable, enter the value of the second reference point and press **Enter**.

```
RH : 74.9684 2. ref ? 75.4
OK
```

14. If the adjustment is successful, the transmitter responds with the text **OK**, and stores the adjustment.

    If the reference points do not fulfill the requirements, or the measurement is too unstable for adjustment, the adjustment sequence will exit with an error message. In such a case, the adjustment is not stored.

15. Give the `l` command to verify that the values of the adjustment parameters **Cp offset** and **Cp gain** have changed.

    Example: User adjustment parameters after two-point humidity adjustment (your values will be different):

    ```
    Cp offset : -2.21914053E-03
    Cp gain : 1.00767076E+00
    T offset : 0.00000000E+00
    T gain : 1.00000000E+00
    ```

16. Remove the probe from the salt jar and reconnect the filter. Plug the hole on the salt jar.
17. Update the calibration date and calibration information on the transmitter using the `cdate` and `ctext` commands.

    Example: Set calibration date to 2018-07-04 and calibration info text to "Lab2/Mike".

    ```
    cdate 20180704
    Cal. date : 20180704
    ctext Lab2/Mike
    Cal. info : Lab2/Mike
    ```

18. Disconnect the connection cable from the service port.
19. Reconnect the terminal blocks and close the cover.

7.6 Two-point temperature calibration and adjustment using computer

You can also use Vaisala Insight software for performing calibration and adjustment. See Vaisala Insight PC software (page 37).

- Computer with
  - Windows operating system
  - Terminal application
  - Free USB port
  - Driver for Vaisala USB cable installed
- Vaisala USB cable for computer connection (219690)
- Two temperature references in range -40 ... +60 °C (-40 ... +140 °F) with more than 30 °C (86 °F) difference
- Medium size crosshead screwdriver (Pozidriv)

1. Prepare the HMDW110 series transmitter for a service port connection.
   a. Open the cover of the HMDW110 series transmitter.
   b. If the terminal block for terminals 5–8 is wired, pull it out.

      This disconnects the transmitter from supply voltage and prevents possible equipment damage that may be caused by ground loops. The locations of the terminal blocks and the service port are shown in HMDW110 series component boards (page 19).
   c. If the other terminal block is wired (terminals 1–4), pull it out also.

      This prevents the communication between the transmitter and the Modbus (RS-485) host from interfering with your connection.
2. Plug in connection cable 219690 to the service port of the HMDW110 series transmitter, and the other end to a free USB port on your computer.
3. Insert the probe in the first temperature reference.
4. Wait at least 15 minutes for temperature to stabilize.
5. Start a terminal application on the computer and open a new terminal session to the transmitter. For more information, see Terminal application settings (page 40).
6. Give the **`errs`** and **`send`** commands to check that there are no active errors, and that the measurement is working:

```
errs
0000h
No errors
send
T= 23.1 'C RH= 11.5 %RH Td= -7.3 'C Tw= 9.9 'C h= 28.5 kJ/kg
```

7. Give the **`l`** command to view the currently active user adjustment parameters.

   Example: Default values of the user adjustment parameters (no user adjustment done):

```
Cp offset : 0.00000000E+00
Cp gain : 1.00000000E+00
T offset : 0.00000000E+00
T gain : 1.00000000E+00
```

8. Give the **`ct`** command to start the calibration and adjustment sequence. The transmitter shows the measured T value and prompts you to enter the real temperature of the first reference point.

```
ct
T : 22.9424 1. ref ?
```

9. Press **Enter** to refresh the measured value (to see if the measurement is now stable). When it is, enter the value of the first reference point (in degrees Celsius) and press **Enter**.

```
T : 22.9424 1. ref ? <cr>
T : 22.9424 1. ref ? 23.0
Press any key when ready ...
```

To exit the procedure without adjusting the measurement, press the **Esc** key on your keyboard.

10. Transfer the probe to the second temperature reference.
11. Wait for the temperature to stabilize. Press **Enter** on the keyboard to refresh the measured value:

```
Press any key when ready ...
T : 54.9871 2. ref ? <cr>
T : 54.9873 2. ref ? <cr>
```

12. When the measurement is stable, enter the value of the second reference point and press **Enter**.

```
T : 54.9873 2. ref ? 55
OK
```

13. Give the `l` command to verify that new values for user adjustment parameters **T offset** and **T gain** have been stored.

    Example: User adjustment parameters after two-point temperature adjustment (your values will be different):

```
Cp offset : 0.00000000E+00
Cp gain : 1.00000000E+00
T offset : 7.64255524E-02
T gain : 1.00767076E+00
```

14. Remove the probe from the temperature reference.
15. Update the calibration date and calibration information on the transmitter using the `cdate` and `ctext` commands.

    Example: Set calibration date to 2018-07-04 and calibration info text to "Lab2/Mike".

```
cdate 20180704
Cal. date : 20180704
ctext Lab2/Mike
Cal. info : Lab2/Mike
```

16. Disconnect the connection cable from the service port.
17. Reconnect the terminal blocks and close the cover.

7.7 Replacing HUMICAP sensor on HMD110/112 and HMW110/112

- New HUMICAP® humidity sensor (HUMICAP180R or HUMICAP180V)
- New filter (always recommended when replacing the sensor)
- Duct models only: medium size crosshead screwdriver (Pozidriv)

1. Power down the transmitter.
2. Duct models only: loosen the tightening screw on the fastening flange and pull the probe out of the duct.
3. Remove the filter to access the sensors.

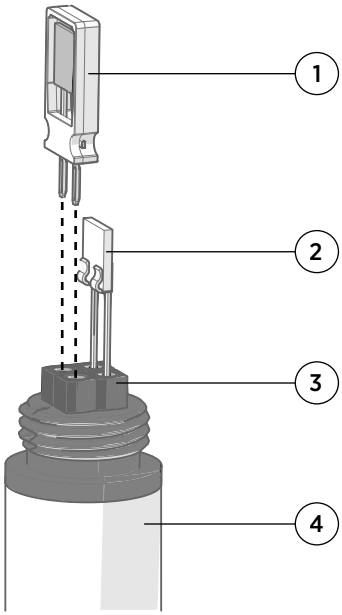

1 Vaisala HUMICAP® sensor. Handle by the plastic frame.
2 Temperature sensor. Do not touch or attempt to remove.
3 Sensor socket.
4 Transmitter probe.

4. Pull out the old HUMICAP® sensor and insert the new one.
5. Perform a two-point humidity calibration on the serial line using the **FCRH** command.
6. Insert the new filter.

7. Duct models only: push the probe back into the duct, to the same depth where it was before. Tighten the tightening screw on the fastening flange.
8. Power up the transmitter.

More information

- Two-point humidity calibration and adjustment using computer and HMK15 Humidity Calibrator (page 66)

7.8 Replacing HUMICAP sensor on HMS110/112

- New HUMICAP® humidity sensor (HUMICAP180R or HUMICAP180V)
- New filter (always recommended when replacing the sensor)
- Medium size crosshead screwdriver (Pozidriv)
- Flat-head screwdriver
- 3 mm hex key (Allen key) for opening the radiation shield screws

You will need to remove the radiation shield to access the sensor, and this is difficult to do while the transmitter remains mounted on a pole or wall. The procedure below takes advantage of the detachable screw terminal to allow the cable to remain in place during the operation.

1. Power down the transmitter.
2. Open the transmitter cover and unplug the screw terminal. This allows you to leave the cable and cover at the installation site.
3. Remove the transmitter from its installation point.
4. Open the two long screws that hold the radiation shield and pull them out.
5. Use a flat head screwdriver to push on the visible plastic tab below the radiation shield.
6. Tilt the radiation shield away from the opened tab. This opens the second tab on the other side, allowing you to remove the radiation shield.

7. Remove the filter to access the sensors.

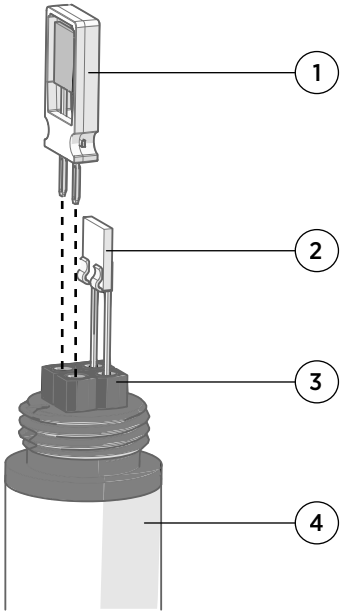

1 Vaisala HUMICAP® sensor. Handle by the plastic frame.
2 Temperature sensor. Do not touch or attempt to remove.
3 Sensor socket.
4 Transmitter probe.

8. Pull out the old HUMICAP® sensor and insert the new one.
9. Perform a two-point humidity calibration on the serial line using the **FCRH** command.
10. Insert the new filter.
11. Reassemble, remount, and reconnect the transmitter.
12. Power up the transmitter.

More information

- Two-point humidity calibration and adjustment using computer and HMK15 Humidity Calibrator (page 66)

7.9 Filter options

When replacing the filter, note that there are two alternative filter options. The default filter in all HMDW110 series transmitters is the PTFE membrane filter (item code ASM210856SP). A porous PTFE filter (item code DRW239993SP) is also available as an accessory.

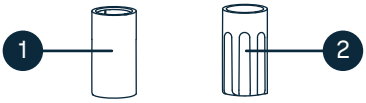

1 Porous PTFE filter (item code DRW239993SP)
2 PTFE membrane filter (item code ASM210856SP): default option

8. Troubleshooting

8.1 Problem situations

If you experience problems when using the transmitter, check the following table before contacting Vaisala. If the problem you have is not listed in the table, or if the proposed solution does not fix the problem, contact a Vaisala Service Center. For contact information, see Technical support (page 95).

Problem	Likely cause	Possible solution
Analog output reading is unchanging and appears incorrect.	Analog output is in error state.	Remove the cause of the error state and the analog output will recover its normal function.
Probe outputs stars "****" on serial line instead of measurement data.	Humidity sensor is wet.	Wait for the humidity sensor to dry, or remove the filter and gently dry the sensors and the filter with clean instrument air.
	Sensor damage.	Remove the filter and visually check the sensors for damage. Contact a Vaisala Service Center if repair is needed. Note that you can also replace the humidity sensor yourself. Refer to instructions in Replacing HUMICAP sensor on HMD110/112 and HMW110/112 (page 72) and Replacing HUMICAP sensor on HMS110/112 (page 73).
	Unsuitable operating environment.	Verify that the operating environment is within specified operating limits.
Cannot connect to transmitter using service port.	You are not using the right connection cable.	Check that you are using the specified cables: • MI70 connection cable (219980SP) • Vaisala USB cable for computer connection (219690)
Transmitter is not responding to serial commands.	Unknown serial line settings or Modbus mode in use.	Temporarily override the transmitter's serial line settings as instructed in Accessing service port command interface in devices with Modbus output (page 41).
	Transmitter is in poll mode.	Open a connection to the transmitter with the **open** command. See Table 23 (page 51). If you do not know the transmitter's address, give the **??** command to make the transmitter output its status information, including the address.

8.2 Error messages in Insight software

Table 45 Error messages in Insight software

Error	Likely cause	Suggested solution
Temperature measurement error. [44]	Temperature sensor is short circuited, damaged, or missing.	Check that the legs of the temperature sensor are not short circuited. Contact Vaisala if the temperature sensor is damaged.
Humidity measurement error. [45]	Humidity sensor is wet.	Wait for the humidity sensor to dry, or remove the filter and gently dry the sensors and the filter with clean instrument air.
Humidity sensor failure. [46]	Humidity sensor is damaged or missing.	Replace the humidity sensor or contact Vaisala.
Ambient temperature out of range. [48]	Ambient temperature is too high.	Lower the temperature at the installation site.
Supply voltage out of range. [55]	Supply voltage is too low.	Check and correct the power supply and wiring.
Capacitance reference error. [47]	Internal transmitter failure.	Power-cycle the device, and if necessary, restore the factory settings. If the error remains, contact Vaisala.
Firmware checksum mismatch. [49]		
Device settings corrupted. [50]		
Additional configuration settings corrupted. [51]		
Sensor coefficients corrupted. [52]		
Main configuration settings corrupted. [53]		
Non-volatile memory read/write failure. [57]		
Calibration certificate checksum mismatch. [58]		

In case of constant error, contact Vaisala.

More information

- Technical support (page 95)

8.3 Error codes in MI70 handheld indicator

If several errors are active at the same time, the MI70 shows the sum of currently active error codes. The hexadecimal prefix "0x" might not be displayed in MI70.

Table 46 Error codes in MI70

Transmitter error code in MI70	Corresponding error
0x1	Temperature measurement error. [44]
0x2	Humidity measurement error. [45]
0x4	Humidity sensor failure. [46]
0x8	Capacitance reference error. [47]
0x10	Ambient temperature out of range. [48]
0x20	Firmware checksum mismatch. [49]
0x40	Device settings corrupted. [50]
0x80	Additional configuration settings corrupted. [51]
0x100	Sensor coefficients corrupted. [52]
0x200	Main configuration settings corrupted. [53]
0x800	Supply voltage out of range. [55]
0x2000	Non-volatile memory read/write failure. [57]
0x4000	Calibration certificate checksum mismatch. [58]

8.4 Unknown serial settings

You can check the current serial settings of your transmitter by connecting to the serial line, or with Vaisala Insight software.

More information

- Vaisala Insight PC software (page 37)
- Accessing service port command interface in devices with Modbus output (page 41)

9. Technical data

9.1 HMD110/112, TMD110/112, HMW110/112, TMW110/112, and HMS110/112 specifications

Table 47 HMD110/112, TMD110/112, HMW110/112, TMW110/112, and HMS110/112 measurement performance

Parameter	Description/Value
Relative humidity	
Measurement range	0–100 %RH
Accuracy: [1)]	
at +10 ... +30 °C (+50 ... +86 °F)	±2 %RH (0–90 %RH) ±3 %RH (90–100 %RH)
at −20 ... +10 °C, +30 ... +60 °C (−4 ... +50 °F, +86 ... +140 °F)	±3 %RH (0–90 %RH) ±4 %RH (90–100 %RH)
at −40 ... −20 °C (−40 ... −4 °F)	±4 %RH (0–100 %RH)
Stability in typical HVAC applications	±0.5 %RH/year
Humidity sensor types	HUMICAP® 180R HUMICAP® 180V
Temperature	
Measurement range	−40 ... +60 °C (−40 ... +140 °F)
Accuracy at +20 °C (+68 °F)	±0.2 °C (±0.36 °F)
Temperature dependence	±0.01 °C/°C
Temperature sensor	Pt1000 RTD Class F0.1 IEC 60751
Factory calibration uncertainty at +20 °C (+68 °F)	±1.5 %RH/±0.2 °C

1) *With HUMICAP® 180V humidity sensor, accuracy is not specified below −20 °C (−4 °F) operating temperature.*

Table 48 HMD110/112, TMD110/112, HMW110/112, TMW110/112, and HMS110/112 calculated parameters

Property	Description/Value
Measurement range	

Property	Description/Value
Dew point temperature and wet bulb temperature	−40 ... +80 °C (−40 ... +176 °F)
Enthalpy	−40 ... 1530 kJ/kg (−9.6 ... 648 BTU/lb)
Accuracy [1) 2)]	
Dew point	±0.7 °C (1.2 °F)
Wet bulb temperature	±0.5 °C (0.9 °F)
Enthalpy	±1.6 kJ/kg (0.7 BTU/lb)

1) *At +20 °C (+68 °F) and 80 %RH.*
2) *Accuracy of the calculated parameters should be calculated at the actual condition based on the RH and temperature specification.*

Table 49 HMD110/112, TMD110/112, HMW110/112, TMW110/112, and HMS110/112 inputs and outputs

Property	Description/Value
Devices ordered with analog output	
Outputs	4–20 mA, loop powered
Loop resistance	0–600 Ω
Supply voltage	20–28 V DC at 600 Ω load 10–28 V DC at 0 Ω load
Devices ordered with Modbus output	
Interface	RS-485, not isolated, no line termination
Default serial settings	19200 bps N 8 2
Protocols	Modbus® RTU
Supply voltage	10–28 V DC

Table 50 HMD110/112, TMD110/112, HMW110/112, TMW110/112, and HMS110/112 operating environment

Property	Description/Value
Operating temperature:	
with display without display	−5 ... +60 °C (+23 ... +140 °F) −40 ... +60 °C (−40 ... +140 °F)
Operating humidity	0–100 %RH
Maximum wind / flow speed	30 m/s

Property	Description/Value
Storage temperature	−40 ... +60 °C (−40 ... +140 °F)
Storage temperature:	
with display without display	−5 ... +60 °C (+23 ... +140 °F) −40 ... +60 °C (−40 ... +140 °F)
IP rating	IP65: Dust-tight. Protected from water jets from any direction.

Table 51 HMD110/112, TMD110/112, HMW110/112, TMW110/112, and HMS110/112 compliance

Property	Description/Value
EU directives and regulations	EMC Directive (2014/30/EU) RoHS Directive (2011/65/EU) as amended by 2015/863
Safety	EN 61326-1, industrial environment 1)
EMC emissions	CISPR 32 / EN 55032, Class B
Compliance marks	CE, RCM

1) *HMDW110 series transmitters (HMD110/112, TMD110, HMW110/112, TMW110, and HMS110/112) fulfill the requirements for industrial electromagnetic environment, considering that a maximum permissible electrostatic air discharge of ±7 kV has been specified for this product.*

Table 52 HMD110/112, TMD110/112, HMW110/112, TMW110/112, and HMS110/112 mechanical specifications

Property	Description/Value
Screw terminal wire size	Max. 1.5 mm^2 (AWG 16)
Standard housing color	White (RAL9003)
Housing material	PC + 10 %GF (UL-V0 approved)

9.2 TMI110 specifications

Table 53 TMI110 measurement performance

Property	Description/Value
Temperature	

Property	Description/Value
Measurement range	−40 ... +120 °C (−40 ... +248 °F)
Accuracy at +20 °C (+68 °F)	±0.1 °C (±0.18 °F)
Temperature dependence	±0.01 °C/°C
Response time (T63) at +20 °C (+68 °F)	< 8 s typical
Temperature sensor	Pt1000 RTD Class A, IEC 60751
Factory calibration uncertainty at +20 °C (+68 °F)	±0.1 °C (±0.18 °F)

Table 54 TMI110 inputs and outputs

Property	Description/Value
Devices ordered with analog output	
Outputs	4–20 mA, loop-powered
Loop resistance	0–600 Ω
Supply voltage	20–28 V DC at 600 Ω load 10–28 V DC at 0 Ω load
Devices ordered with Modbus output	
Interface	RS-485, not isolated, no line termination
Default serial settings	19200 bps N 8 2
Protocol	Modbus RTU
Supply voltage	10–28 V DC

Table 55 TMI110 operating environment

Property	Description/Value
Operating environment, probe	−40 ... +120 °C (−40 ... +248 °F)
Operating environment, electronics	Without display: −40 ... +60 °C (−40 ... +140 °F) With display: −5 ... +60 °C (+23 ... +140 °F)
Storage temperature	Without display: −40 ... +60 °C (−40 ... +140 °F) With display: −5 ... +60 °C (+23 ... +140 °F)

Property	Description/Value
IP rating	IP65: Dust-tight. Protected from water jets from any direction.
UL 50E/NEMA rating	Type 4: Dust-tight. Protected from hose-directed water.

Table 56 TMI110 compliance

Property	Description/Value
EU directives and regulations	EMC Directive (2014/30/EU) RoHS Directive (2011/65/EU) as amended by 2015/863
EMC immunity	EN 61326-1, basic electromagnetic environment
EMC emissions	CISPR 32 / EN 55032, Class B
Compliance marks	CE, RCM

Table 57 TMI110 mechanical specifications

Property	Description/Value
Probe material	Stainless steel
Probe diameter	6 mm (0.24 in)
Probe length options	• 50 mm (1.97 in) • 100 mm (3.94 in) • 150 mm (5.91 in) • 200 mm (7.87 in)
Screw terminal wire size	Max. 1.5 mm^2 (AWG 16)
Standard housing color	White (RAL9003)
Housing material	PC + 10 %GF (UL-V0 approved)

9.3 Dimensions

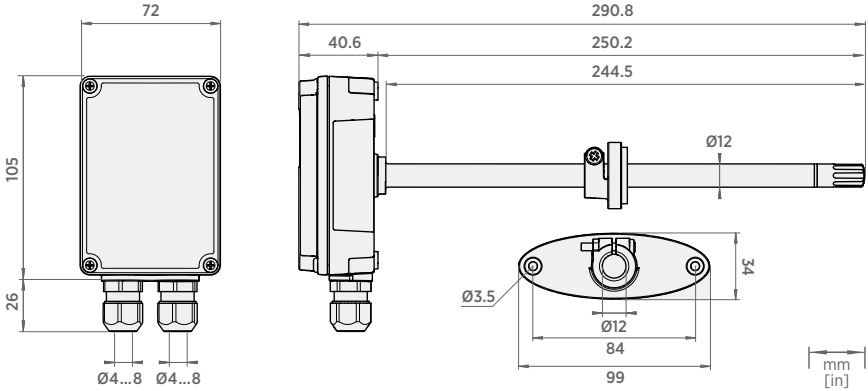

Figure 17 HMD110/112 and TMD110/112 dimensions

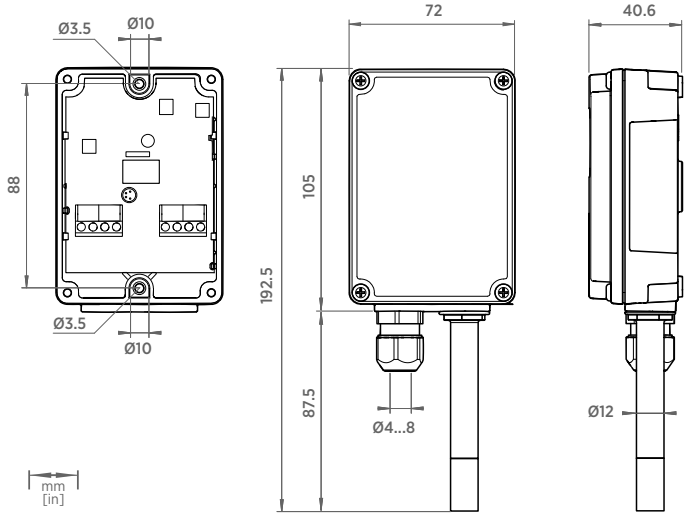

Figure 18 HMW110/112 and TMW110/112 dimensions

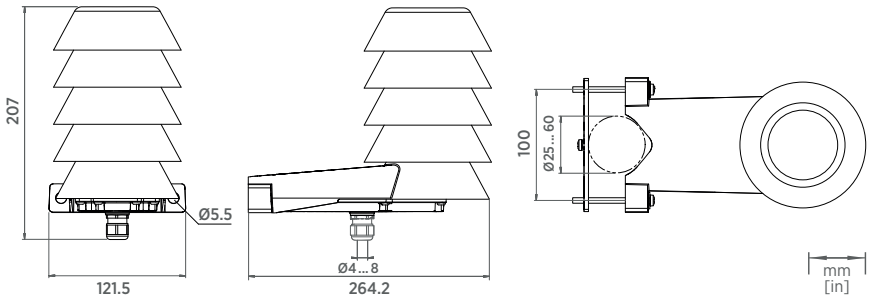

Figure 19 HMS110/112 dimensions

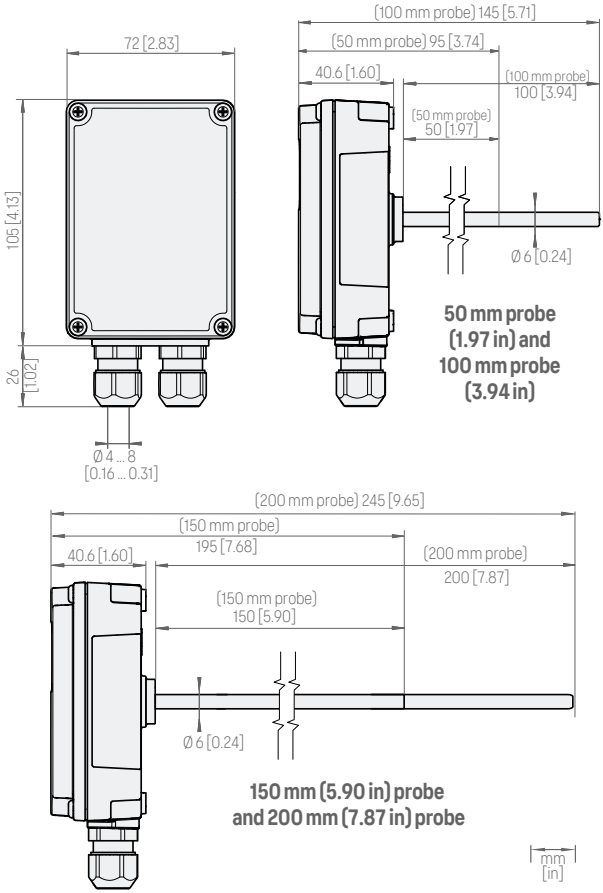

Figure 20 TMI110 dimensions

9.4 Spare parts and accessories

Table 58 HMD110/112, TMD110/112, HMW110/112, TMW110/112, and HMS110/112 spare parts and accessories

Description	Item code
Conduit fitting + O-ring (M16 × 1.5 / NPT1/2")	210675SP
Conduit fitting + O-ring (M16 × 1.5 / PG9, RE-MS)	210674SP
Fastening flange assembly (screws included)	ASM210771SP

Description	Item code
Porous PTFE filter	DRW239993SP
Membrane filter	ASM210856SP
Terminal block, blue	236620SP
USB cable for PC connection	219690
Connection cable (M12-4F / M8-4M), length 1.2 m	279222SP
Connection cable for HM70 handheld meter	219980SP
HUMICAP® 180R humidity sensor	HUMICAP180R
HUMICAP® 180V humidity sensor (catalytic)	HUMICAP180V

Table 59 TMI110 spare parts and accessories

Description	Item code
Conduit fitting + O-ring (M16×1.5 / NPT1/2″)	210675SP
Conduit fitting + O-ring (M16×1.5 / PG9, RE-MS)	210674SP
Thermowell ISO 7 - R 1/2″, for 50 mm probe	ASM216268
Thermowell ISO 7 - R 1/2″, for 100 mm probe	ASM214691
Thermowell ISO 7 - R 1/2″, for 150 mm probe	279722
Thermowell ISO 7 - R 1/2″, for 200 mm probe	279723
Thermowell 1/2″ - 14 NPT, for 50 mm probe	ASM216270
Thermowell 1/2″ - 14 NPT, for 100 mm probe	ASM214707
Thermowell 1/2″ - 14 NPT, for 150 mm probe	279724
Thermowell 1/2″ - 14 NPT, for 200 mm probe	279725
Welded thermowell (no thread), for 50 mm probe	ASM216267
Welded thermowell (no thread), for 100 mm probe	ASM216119
Terminal block, blue	236620SP
USB cable for PC connection	219690
Connection cable for HM70 handheld meter	219980SP

Appendix A. Modbus reference

A.1 Default communication settings

The following table lists the default Modbus serial settings of devices ordered with the Modbus configuration option.

Table 60 Default Modbus serial communication settings

Description	Default value
Serial bit rate	19200
Parity	N
Number of data bits	8
Number of stop bits	2
Modbus device address	240
Serial delay	0
Communication mode	Modbus RTU

A.2 Function codes

Table 61 Modbus function codes

Function code (decimal)	Function code (hexadecimal)	Name
03	0x03	Read Holding Registers
16	0x10	Write Multiple Registers
43/14	0x2B / 0x0E	Read Device Identification

A.3 Data encoding

Registers using "32-bit float" data format are encoded using the "binary32" encoding defined in IEEE 754 (also known as "single-precision floating point format").

The least significant 16 bits of a floating point number are placed at the Modbus register listed in the table, while the most significant 16 bits are placed in the register with number/address + 1, as specified in Open Modbus TCP Specification, Release 1.0. This is also known as "little-endian" or "Modicon" word order.

Despite the specification, some Modbus masters may expect "big-endian" word order (most significant word first). In such case, you must select "word-swapped" floating point format in your Modbus master for the Modbus registers of the device.

Reading the measurement data registers with incorrect floating point format setting may occasionally result in correct-looking values. It is highly recommended to first try reading the register number 7938 (floating point test) to see that you have configured the floating point format correctly on your Modbus host system.

A complete 32-bit floating point value should be read and written in a single Modbus transaction.

A.4 Modbus registers

Registers are numbered in decimal, starting from 1. Register addresses in actual Modbus messages (Modbus Protocol Data Unit (PDU)) are in hexadecimal and start from zero. Register number 1 corresponds to address 0x0 in the actual Modbus message.

A.4.1 Measurement data registers

Accessing unavailable (temporarily missing) measurement data does not generate an exception. “Unavailable” value (a quiet NaN) is returned instead.

Measurement output is shown in metric units. If non-metric values are needed in Modbus use, the units shall be converted in the Modbus master (PLC) using the scaling functions typically available.

Table 62 HMD110/112, HMW110/112, and HMS110/112 Modbus measurement data registers (read-only)

Register number (decimal)	Address (hexadecimal)	Register description	Data format	Unit
1	0x0000	Relative humidity	32-bit float	%RH
3	0x0002	Temperature	32-bit float	°C
9	0x0008	Dew/frost point temperature	32-bit float	°C
19	0x0012	Wet bulb temperature	32-bit float	°C
27	0x001A	Enthalpy	32-bit float	kJ/kg

Table 63 TMI110 Modbus measurement data register (read-only)

Register number (decimal)	Address (hexadecimal)	Register description	Data format	Unit
3	0x0002	Temperature	32-bit float	°C

A.4.2 Status registers

Table 64 Modbus status registers (read-only)

Register number (decimal)	Address (hexadecimal)	Register description	Data format	Notes
513	0x0200	Device status	16-bit integer	1 = No errors
516	0x0203	Error code	32-bit field	
518	0x0205	Security hash	32-bit integer	Security hash changes on any change to device settings/adjustments

Table 65 Error codes on Modbus interface

Error code register value	Corresponding error
1	Temperature measurement error. [44]
2	Humidity measurement error. [45] 1)
4	Humidity sensor failure. [46] 1)
8	Capacitance reference error. [47] 1)
16	Ambient temperature out of range. [48]
32	Firmware checksum mismatch. [49]
64	Device settings corrupted. [50]
128	Additional configuration settings corrupted. [51]
256	Sensor coefficients corrupted. [52]
512	Main configuration settings corrupted. [53]
2048	Supply voltage out of range. [55]
8192	Non-volatile memory read/write failure. [57]
16384	Calibration certificate checksum mismatch. [58]

1) *Applicable to transmitters with humidity measurement.*

If several errors are active at the same time, the Modbus Error Code register contains the sum of currently active error codes.

Refer to Error messages in Insight software (page 77) for more information about the error states.

A.4.3 Configuration registers

Table 66 Modbus configuration data registers (writable)

Register number (decimal)	Address (hexadecimal)	Register description	Data format	Unit / valid range
Filtering				
785	0x0310	Filtering factor	32-bit float	0.001 (maximum filtering)–1.000 (no filtering)
Communication				
1537	0x0600	Modbus address	16-bit integer	1–247
1538	0x0601	Bit rate (b/s) [1)]	16-bit integer	5 = 9600 6 = 19200 7 = 38400 8 = 57600
1539	0x0602	Parity, data, stop bits [1)]	16-bit integer	0 = N81 1 = N82 2 = E81 3 = E82 4 = O81 5 = O82
1540	0x0603	Response delay	16-bit integer	0–1020 ms
1541	0x0604	Protocol	16-bit integer	6 = Modbus RTU
Functions				
1542	0x0605	Restart device	16-bit integer	Write 1 to restart device

1) Changed setting will be activated on device restart.

A.4.4 Test value registers

Read the known test values from the test registers to verify the functionality of your Modbus implementation.

Table 67 Modbus test registers (read-only)

Register number (decimal)	Address (hexadecimal)	Register description	Data format	Test value
7937	0x1F00	Signed integer test	16-bit integer	-12345
7938	0x1F01	Floating point test	32-bit float	-123.45
7940	0x1F03	Text string test	7-character ASCII string	Text string "-123.45"

A.4.5 Device identification objects

Table 68 Device identification objects

Object ID (decimal)	Object ID (hexadecimal)	Object name	Example contents
0	0x00	VendorName	"Vaisala"
1	0x01	ProductCode	"HMDW110"
2	0x02	MajorMinorVersion	Software version (for example "2.2.0")
3	0x03	VendorUrl	"http://www.vaisala.com/"
4	0x04	ProductName	"Vaisala HUMICAP® Humidity and Temperature Transmitter HMDW110"
128	0x80	SerialNumber [1)]	Transmitter serial number (for example, "D0710040")
129	0x81	CalibrationDate [1)]	Date of the factory calibration (for example, "2022-08-07")
130	0x82	CalibrationText [1)]	Information text of the factory calibration (for example, "Vaisala/HEL")

1) Vaisala-specific device identification object.

A.5 Modbus communication examples

Reading relative humidity value

The device address used in the following examples is 240 (0xF0).
The values returned by the device differ depending on the ambient conditions and/or device settings. Your device might not return exactly same values.

Request		Response	
Bytes on the line (hexadecimal)	**Description**	**Bytes on the line (hexadecimal)**	**Description**
(silence for 3.5 bytes)	Start of Modbus RTU frame	(silence for 3.5 bytes)	Start of Modbus RTU frame
0xF0	Transmitter address	0xF0	Transmitter address
0x03	Function (Read Holding Registers)	0x03	Function (Read Holding Registers)
0x00	Register address	0x04	Number of data bytes
0x00		0x7A	Value of first register (least significant word)
0x00	Number of 16-bit registers to read (2)	0xE1	
0x02		0x41	Value of second register (most significant word)
0xD1	Modbus RTU checksum	0xF4	
0x2A		0x62	Modbus RTU checksum
(silence for 3.5 bytes)	End of Modbus RTU frame	0x05	
		(silence for 3.5 bytes)	End of Modbus RTU frame

Communication description	
Register number	1 (1-based Modbus register number) = address 0x0000 (0-based address used in actual communication).
Data format	Two 16-bit Modbus registers interpreted as IEEE 754 binary32 floating point value, least significant word first.
Returned value	0x41F47AE1, which is binary32 representation of 30.56 (%RH).

Writing filtering factor value

Request		Response	
Bytes on the line (hexadecimal)	**Description**	**Bytes on the line (hexadecimal)**	**Description**
(silence for 3.5 bytes)	Start of Modbus RTU frame	(silence for 3.5 bytes)	Start of Modbus RTU frame
0xF0	Transmitter address	0xF0	Transmitter address
0x10	Function (Write Multiple Registers)	0x10	Function (Write Multiple Registers)
0x03	Register address	0x03	Register address
0x10		0x10	
0x00	Number of registers to write (2)	0x00	Number of 16-bit registers written (2)
0x02		0x02	
0x04	Number of data bytes	0x55	Modbus RTU checksum
0xCC	Value for the first register (least significant word)	0x68	
0xCD		(silence for 3.5 bytes)	End of Modbus RTU frame
0x3E	Value for the second register (most significant word)	The response to a write function informs that the function was correctly received by the device. It does not guarantee that the written value was accepted by the device (for example, in case of out-of-range values). To verify that the value was really accepted by the device, read the register value after writing.	
0x4C			
0x5E	Modbus RTU checksum		
0x96			
(silence for 3.5 bytes)	End of Modbus RTU frame		

Communication description	
Register number	785 (1-based Modbus register number) = address 0x0310 (0-based address used in actual communication).
Data format	Two 16-bit Modbus registers interpreted as IEEE 754 binary32 floating point value, least significant word first.
Value to write	0.2, in binary32 format 0x3E4CCCCD.

Maintenance and calibration services

Vaisala offers comprehensive customer care throughout the life cycle of our measurement instruments and systems. Our factory services are provided worldwide with fast deliveries. For more information, see vaisala.com/calibration.

- Vaisala Online Store at store.vaisala.com is available for most countries. You can browse the offering by product model and order the right accessories, spare parts, or maintenance and calibration services.
- To contact your local maintenance and calibration expert, see vaisala.com/contactus.

Technical support

You can contact Vaisala technical support at my.vaisala.com or helpdesk@vaisala.com. You can find all our support channels at vaisala.com/support.

When contacting technical support, provide the following as applicable:

- Product name, model, and serial number
- Software/Firmware version
- Name and location of the installation site
- Name and contact information of a technical person who can provide further information
- Diagnostics package for the application

If applicable, also provide the following details:

- What failed (what worked / did not work)?
- Where did it fail (location and environment)?
- When did it fail (date, immediately / after a while / periodically / randomly)?
- How many failed (only one defect / other same or similar defects / several failures in one unit)?
- What was done when the failure was noticed?
- What was connected to the product and to which connectors?
- What is the input power source type, voltage, and what else (such as lighting, heaters, and motors) was connected to the same power output?
- Are all parts connected and grounded properly? Take a photo to help the troubleshooting.

Warranty

For warranty terms and conditions and the warranty claim process, see vaisala.com/warranty. Warranty coverage may not apply if the product is damaged due to normal wear and tear, exceptional operating conditions, negligent handling or installation, or unauthorized modifications. See the applicable supply contract or Conditions of Sale for details of the warranty for each product.

Recycling

Recycle all applicable material according to local regulations.

VAISALA

vaisala.com

AKRIBIS · www.akribis.info · contacto@akribis.info