USER GUIDE

HMP155

Vaisala · Authorized Partner

Distributed by AKRIBIS

M210912EN-J

User Guide

Vaisala HUMICAP® Humidity and Temperature Probe

HMP155

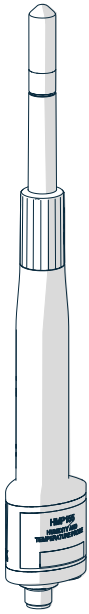

VAISALA

AKRIBIS · www.akribis.info · contacto@akribis.info

PUBLISHED BY

Vaisala Oyj
Vanha Nurmijärventie 21, FI-01670 Vantaa, Finland
P.O. Box 26, FI-00421 Helsinki, Finland
+358 9 8949 1
vaisala.com
docs.vaisala.com

© Vaisala Oyj 2025

No part of this document may be reproduced, published, or publicly displayed in any form or by any means, electronic or mechanical (including photocopying), nor may its contents be modified, translated, adapted, sold, or disclosed to a third party without prior written permission of the copyright holder. Translated document and translated portions of the document are based on the original English version. Parts of the translation may have been created using machine-assisted translation. In ambiguous cases, the English version is applicable, not the translation.

The contents of this document are subject to change without prior notice.

Local rules and regulations applicable to the products and services may vary, and they shall take precedence over the information contained in this document. Vaisala makes no representations on this document's compliance with the local rules and regulations applicable at any given time, and hereby disclaims any and all responsibilities related thereto. You are instructed to confirm the applicability of the local rules and regulations and their effect on the intended use of the products and services.

This document does not create any legally binding obligations for Vaisala towards customers or end users. All legally binding obligations are set forth exclusively in the applicable contract or in the relevant set of General Conditions of Vaisala (vaisala.com/policies).

This product contains software developed by Vaisala or third parties. Use of the software is governed by license terms and conditions included in the applicable contract or, in the absence of separate license terms and conditions, by the General License Conditions of Vaisala Group.

Table of contents

1. About this document ... 7
1.1 Version information ... 7
1.2 Related manuals ... 7
1.3 Documentation conventions ... 7
1.4 Trademarks ... 8
1.5 Patent notice ... 8

2. Product overview ... 9
2.1 Vaisala HUMICAP Humidity and Temperature Probe HMP155 ... 9
2.1.1 HMP155 models ... 9
2.1.2 Humidity sensor options ... 10
2.1.3 Features and options ... 11
2.2 HMP155 parts ... 13
2.3 Heating options ... 13
2.3.1 Warmed probe option ... 14
2.3.2 Chemical purge option ... 14
2.3.3 Extra sensor heating (Xheat) option ... 16
2.4 Additional temperature probe option ... 17
2.5 Connection cover option ... 18
2.6 Safety ... 18
2.6.1 ESD protection ... 19

3. Installation ... 20
3.1 Installing HMP155 ... 20
3.1.1 Mounting HMP155 and DTR13 on horizontal support arm ... 21
3.1.2 Mounting HMP155 inside radiation shield DTR503A ... 25
3.1.3 Mounting HMP155 on DTR13P44H support arm ... 28
3.1.4 Installation in Stevenson screen ... 31
3.2 Wiring HMP155 ... 32
3.2.1 8-pin connector ... 33

4. Operation ... 36
4.1 RS-485 interface ... 36
4.2 Serial line communication ... 36
4.2.1 Installing driver for USB cable ... 37
4.2.2 Connecting HMP155 with PuTTY terminal software ... 38
4.3 Temporary RS-485 connection option ... 39
4.4 HMP155 commands ... 40
4.5 Measurement commands ... 42
4.5.1 R command ... 42
4.5.2 S command ... 42
4.5.3 INTV command ... 43
4.5.4 SEND command ... 43
4.5.5 SMODE command ... 44
4.5.6 OPEN command ... 44

4.5.7 CLOSE command....44
4.5.8 SDELAY command....45
4.5.9 SERI command....45
4.5.10 ADDR command....46
4.6 Formatting commands....47
4.6.1 FORM command....47
4.6.2 LASKE 6 and LASKE 7 commands....50
4.6.3 TIME command....51
4.6.4 UNIT command....51
4.7 Chemical purge commands....51
4.7.1 PUR command....51
4.8 Extra sensor heating (Xheat) commands....52
4.8.1 XHEAT command....53
4.9 Analog output configuration commands....53
4.9.1 # command....54
4.9.2 AMODE command....54
4.9.3 ASEL command....55
4.9.4 AERR command....56
4.9.5 ATEST command....57
4.10 Pressure compensation commands....58
4.10.1 PRES and XPRES commands....58
4.11 System commands....59
4.11.1 ? command....59
4.11.2 ERRS command....60
4.11.3 FILT command....60
4.11.4 HELP command....60
4.11.5 VERS command....61
4.11.6 RESET command....62

5. Maintenance....63
5.1 HMP155 maintenance....63
5.1.1 Cleaning....63
5.1.2 Changing HMP155 probe filter....63
5.1.3 Changing HUMICAP sensor....64
5.2 Errors....66

6. Calibration and adjustment....68
6.1 Overview....68
6.2 Push-button calibration....69
6.2.1 Performing two-point humidity and temperature adjustment....70
6.2.2 Performing one-point humidity and temperature adjustment....72
6.2.3 Passive output version push-button calibration....74
6.3 Serial line calibration....74
6.3.1 Two-point temperature adjustment....74
6.3.2 Two-point humidity adjustment....76
6.3.3 One-point humidity and temperature adjustment....77
6.3.4 Adjusting and calibrating relative humidity after sensor change....77

6.4 User adjustment commands 79
6.4.1 L command 79
6.4.2 LI command 79
6.4.3 CT command 80
6.4.4 CTA command 81
6.4.5 CRH command 81
6.4.6 FCRH command 82
6.5 Typing calibration information 82
6.5.1 CTEXT command 82
6.5.2 CDATE command 82
6.6 Analog output adjustment 83
6.6.1 ACAL command 83
6.7 Calibrating and adjusting with MI70 84

7. Technical data 86
7.1 HMP155 specifications 86
7.2 Accuracy of calculated variables 90
7.2.1 Accuracy of dew point measurement 90
7.2.2 Accuracy of dew point temperature °C 90
7.2.3 Accuracy of mixing ratio g/kg (ambient pressure 1013 mbar) 91
7.2.4 Accuracy of wet bulb temperature °C 91
7.3 Options, accessories, and spare parts 91
7.4 Dimensions 94

Appendix A: Calculation formulas 96

Technical support 99

Warranty 99

Product returns 99

Recycling 100

1. About this document

1.1 Version information

This document provides information for installing, operating, and maintaining Vaisala HUMICAP Humidity and Temperature Probe HMP155.

Table 1 Document versions

Document code	Date	Description
M210912EN-J	November 2025	Updated the spare part list.
M210912EN-H	March 2025	• Updated installation height instruction to 2 m (7 ft). • Added 100-meter connection cable (279350) to options and accessories list. • Updated information about **LASKE 6** and **LASKE 7** commands. • Added a note about the **FORM** command. • Updated options, accessories, and spare parts list.
M210912EN-G	September 2022	Added a note about RH readings after **fcrh** command. Added commands **LASKE 6** and **LASKE 7**. Updated humidity and temperature adjustment instructions. Updated error state information.

1.2 Related manuals

Table 2 Related manuals

Document code	Name
M210913EN	Vaisala HUMICAP® Humidity and Temperature Probe HMP155 Quick Guide

1.3 Documentation conventions

WARNING! Alerts you to a serious hazard. If you do not read and follow instructions carefully at this point, there is a risk of injury or even death.

CAUTION! Alerts you to a potential hazard. If you do not read and follow instructions carefully at this point, the product could be damaged or important data could be lost.

Highlights important information on using the product.

Gives information for using the product more efficiently.

Lists tools needed to perform the task.

Indicates that you need to take some notes during the task.

1.4 Trademarks

Vaisala® is a registered trademark of Vaisala Oyj.

HUMICAP® is a registered trademark of Vaisala Oyj.

Microsoft® and Windows® are either registered trademarks or trademarks of Microsoft Corporation in the United States and other countries.

All other product or company names that may be mentioned in this publication are trade names, trademarks, or registered trademarks of their respective owners.

1.5 Patent notice

Vaisala HUMICAP® Humidity and Temperature Probe HMP155 is protected by the following patents and patent applications and their corresponding national rights:

- Finnish patent 98861
- French patent 6650303
- German patent 69418174
- Japanese patent 3585973
- UK patent 0665303
- U.S. patent 5607564

2. Product overview

2.1 Vaisala HUMICAP Humidity and Temperature Probe HMP155

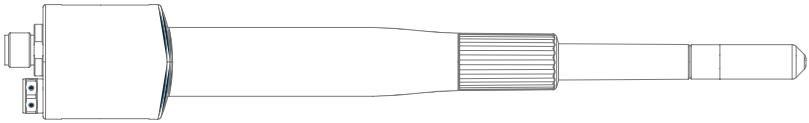

HMP155 measures relative humidity and air temperature. Humidity measurement on the sensor is based on the capacitive thin film polymer HUMICAP sensor. Temperature measurement is based on platinum resistance (Pt100) sensors. Both the humidity and temperature sensors are located at the tip of the probe, protected by a removable filter.

HMP155 is installed inside a radiation shield, which ensures proper ventilation while protecting the sensor from solar radiation and precipitation. The shield provides ventilation while blocking both direct and reflected solar radiation.

2.1.1 HMP155 models

There are 3 HMP155 models: A, D, and E.

- Active output models
  - Model A has 2 analog voltage outputs
  - Model E has RS-485 digital output
- Passive output model
  - Model D has a 4-wire temperature measurement (passive) and an analog voltage output for relative humidity measurement

All HMP155 models have RS-485 interface for the service use.

Table 3 HMP155 models

Feature	HMP155A	HMP155D	HMP155E
Digital RS-485 output			✔
Voltage output for RH	✔	✔	
Voltage output for T	✔		
Passive 4-wire for T		✔	
RS-485 for service use	✔	✔	✔

2.1.2 Humidity sensor options

There are 6 humidity sensor types:

- INTERCAP
- HUMICAP180R
- HUMICAPR2
- INTERCAPC
- HUMICAP180RC
- HUMICAPR2C

> If you have a heated HMP155 and want to measure relative humidity (RH), you need a composite sensor (C).

The features are listed in the following table.

Table 4 Humidity sensors

Humidity sensor	General purpose	Composite sensor	Suitable for sensor heating
INTERCAP	✔		
HUMICAP180R	✔		
HUMICAPR2	✔		
INTERCAPC		✔	✔
HUMICAP180RC		✔	✔
HUMICAPR2C		✔	✔

Table 5 Humidity sensor types

Humidity sensor	Purpose
INTERCAP	Interchangeable general purpose humidity sensor with good humidity durability and short response time.
INTERCAPC	Composite [1)] general purpose humidity sensor with good humidity durability and short response time. The item contains humidity and temperature sensors. Used for chemical purge and heated probe options.
HUMICAP180R	Robust general purpose humidity sensor with high humidity durability, good long-term stability, and good tolerance against chemical exposure.
HUMICAP180RC	Robust composite general purpose humidity sensor. HUMICAP180RC has high humidity durability, good long-term stability, and good tolerance against chemical exposure. The item contains humidity and temperature sensors. Used for chemical purge and heated probe options.
HUMICAPR2	New generation humidity sensor with improved corrosion resistance.

Humidity sensor	Purpose
HUMICAPR2C	New generation composite humidity sensor with improved corrosion resistance.

1) With integral Pt100 sensor

2.1.3 Features and options

Table 6 Analog output options

Feature	Description
Voltage ranges of analog outputs in HMP155A and HMP155D	0–1 V
	0–5 V
	0–10 V
T-output scales in HMP155A	-40 ... +60 °C
	-20 ... +40 °C
	-80 ... +60 °C

Table 7 Models and available features

Feature	HMP155A	HMP155D	HMP155E
Warmed probe	✔		✔
Chemical purge	✔		✔
Extra sensor heating	✔		✔
Additional T-probe	✔		✔

Table 8 Heating options

Option	Description
Heating options	Chemical purge option for applications where interfering chemicals in the measuring environment pose a risk (active output version)
	Warmed probe for improved performance in constant high humidity (active output version)
	Extra sensor heating for rapid drying of HUMICAP (active output version)

Table 9 Accessories

Accessory	Description
USB connection	Accessory for service connection through optional USB-M12 cable
Installation kits	T-probe installation adapter for DTR13 (221069) T-probe installation adapter for DTR502 (221072)
	HMP155 and T-probe installation adapter for Stevenson screen (221321)
Calibration accessory	MI70 measurement indicator
Other features	Connection cover option for additional protection in wet environments

More information

- Additional temperature probe option (page 17)
- Connection cover option (page 18)
- Warmed probe option (page 14)
- Chemical purge option (page 14)
- Extra sensor heating (Xheat) option (page 16)

2.1.3.1 Retrofit HMP45 installations

HMP155 replaces HMP45:
- HMP155A replaces HMP45A
- HMP155D replaces HMP45D

HMP155 offers the followings features not included in HMP45:
- HUMICAP180R and HUMICAPR2 humidity sensors that tolerate chemicals and improve stability
- Alternative humidity variables (dew point/frostpoint temperature, wet bulb temperature, mixing ratio)
- Several voltage output signal ranges: 0–1 V, 0–5 V, 0–10 V
- Fully digital RS-485 output (temporary service connection available for all models)
- Warmed probe option, humidity sensor chemical purge option, extra sensor heating option
- Additional temperature sensor for fast temperature response
- Exchangeable probe cable with a variety of cable options
- Stevenson screen installation adapter

2.2 HMP155 parts

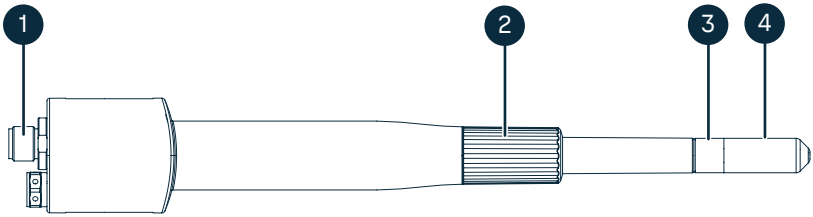

Figure 1 HMP155 parts

1 8-pin male connector (M12)
2 Protective cover
3 Plastic part of filter
4 Filter

2.3 Heating options

HMP155 offers 3 heating options. The following table describes the options, their benefits, and typical applications.

Table 10 Heating options

Feature	Warmed probe	Chemical purge	Extra heat (Xheat)
Type	Continuous probe heating	Periodical heating of humidity sensor	Triggered heating on humidity sensor
Description	Keeps the relative humidity of the humidity sensor below 80 %RH in all circumstances by heating the probe.	Cleans the humidity sensor regularly, for example by heating to 180 °C for 8 min every 0.5–10 days (user configurable).	Heats the humidity sensor chip to 100 °C (212 °F) for 30 s, if the sensor humidity is > 95 %RH (user configurable).
Benefits	Accurate measurement in high humidity climate by avoiding condensation on the probe.	Reduced drift by removing chemical vapors from the sensor polymer.	Rapidly drying water vapor or droplets in humidity sensor.
Where used	High humidity climates, such as tropical, coastal, and marine installations	Installation location exposed to chemical pollution, such as roads and chemical plants	Industrial applications where there is a risk that the humidity sensor becomes too wet (for example, installation without a radiation shield).

Feature	Warmed probe	Chemical purge	Extra heat (Xheat)
Notes	Requires an additional temperature probe for relative humidity measurement.	Data is locked during heating and cooling. Not for use in freezing temperatures. For use before relative humidity calibration and adjustment.	Data is locked during heating and cooling.

Warmed probe, chemical purge and extra heat are optional features available for probes with composite sensors (HUMICAPR2C, HUMICAP180RC, and INTERCAPC).

More information

- Warmed probe option (page 14)
- Chemical purge option (page 14)
- Extra sensor heating (Xheat) option (page 16)

2.3.1 Warmed probe option

The warmed probe is suitable for climates with high humidity. It is ideal for tropical, coastal, and marine installations. It helps the sensor stay dry reducing the chemical contamination and minimizing drift.

In changing temperatures with high humidity, the probe temperature can lag behind the temperature of the surrounding air causing a risk of condensation on the sensor. A wet probe cannot observe the actual humidity in the ambient air. If the condensed water is contaminated, the life span of the probe may shorten and the calibration change.

The temperature of a warmed probe is always higher than that of the environment. This prevents condensation on the probe. With the additional temperature probe it is possible to calculate the true RH based on the non-heated (ambient) temperature information. If you have selected warming but the additional temperature probe is not present, HMP155 only produces dew point and mixing ratio output.

The warmed probe function works with 12 V DC but the heating starts slower. For optimal heating with the warmed probe function, use 16 V DC.

2.3.2 Chemical purge option

The chemical purge option suits installation locations that are exposed to chemical pollution, such as chemical plants and roads.

In some applications the sensor gain may decrease gradually due to an interference caused, for example, by a chemical present in the measured gas. The following figure illustrates the decrease of sensor gain due to an interfering chemical and the effect of the chemical purge process.

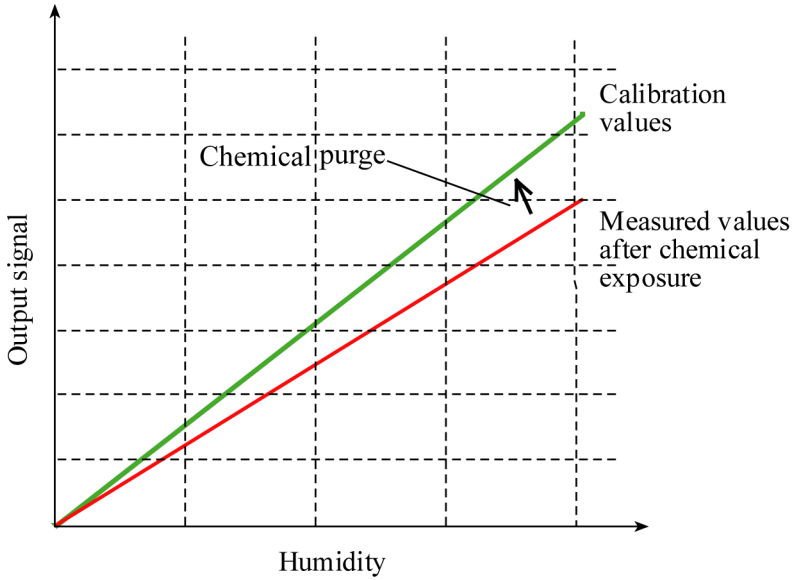

Figure 2 Decrease of sensor gain

The sensor polymer absorbs the interfering chemical which reduces the ability of the polymer to absorb water molecules and consequently the sensor gain decreases. In chemical purge, heating the humidity sensor to approximately +180 °C (356 °F) for several minutes evaporates the interfering chemical.

You can set chemical purge (startup purge) to start within 10 seconds from HMP155 startup. The purge has a heating phase and a cooling phase. After the purge cycle of 8 minutes the sensor returns to normal mode.

Chemical purge function locks the output values for about 8 minutes.

CAUTION! Avoid using the purge function in below freezing temperatures. Low temperatures decrease the effect of purge. It also takes the sensor longer to return to normal function.

2.3.2.1 Automatic chemical purge (interval purge)

If you select the automatic chemical purge option, chemical purge takes place according to the intervals set in the factory. You can change the interval with the **PUR** command. You may have to do it, if the measuring environment contains high concentrations of interfering chemicals. You can also turn off the automatic chemical purge.

2.3.2.2 Manual chemical purge

Perform manual chemical purge
- Always before relative humidity calibration and adjustment
- If you think the sensor has been exposed to an interfering chemical.

You can activate manual chemical purge by turning the startup purge on temporarily and resetting the probe. After the operation, to turn off the startup purge, use the **PUR** command.

Before starting calibration, make sure that the sensor temperature has reached normal temperature.

More information

- Overview (page 68)
- PUR command (page 51)

2.3.3 Extra sensor heating (Xheat) option

You can define the humidity sensor heating temperature and the duration of the heating. Sensor heating starts when the relative humidity of the measuring environment reaches the RH value (RH limit) you have set.

After the heating cycle, a new sensor heating cycle is performed if the predefined conditions are reached again.

During the sensor heating, the outputs are locked to the values measured before the heating cycle.

2.4 Additional temperature probe option

Figure 3 HMP155 with additional T-probe

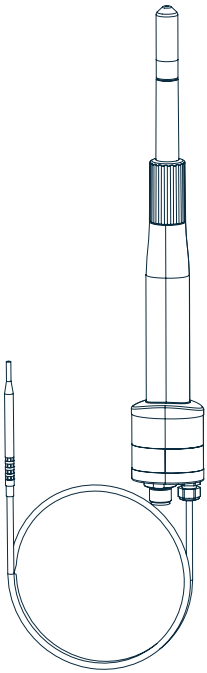

The additional temperature probe is available for HMP155A and HMP155E.

You can order the active output version of HMP155 with an additional temperature probe (T-probe). You can make relative humidity and additional temperature measurements with the additional T-probe, if you have a heated HMP155. The additional T-probe fulfils requirements of meteorological applications. The response time is faster in temperature measurement and it fulfils the WMO requirement of 20-second time constant.

When the additional T-probe is in use, the relative humidity value is calculated based on the T_d dew point value from the humidity probe and the T_a temperature value from the T-probe.

When you install HMP155 with the additional T-probe, make sure that the humidity probe and the T-probe are installed in the same conditions to get accurate readings. Even a slight difference in temperature conditions result in false RH readings. Install the probes so that the humidity probe does not heat the T-probe, but is close enough for the probes to share the same environment conditions. When an RH reading is required, always install the additional T-probe in the place where you need the reading from.

You can calibrate the additional temperature probe in a liquid bath.

2.5 Connection cover option

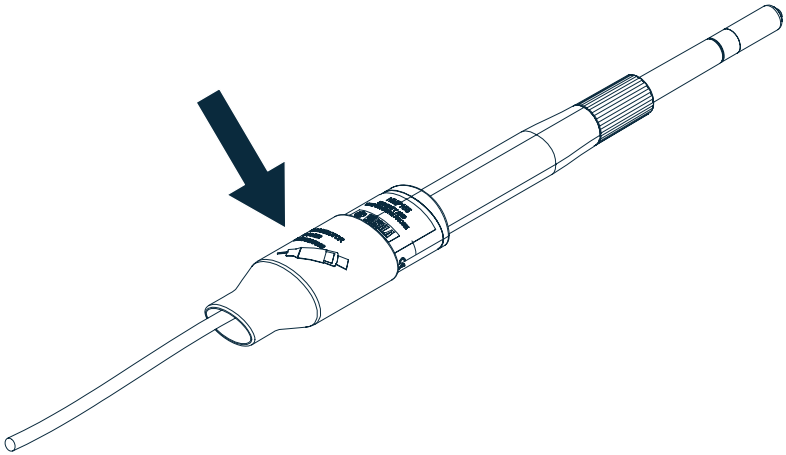

Figure 4 HMP155 with optional connection cover

An optional connection cover is available for enhanced protection in wet environments such as coasts or rainforests.

2.6 Safety

This product has been tested for safety. Note the following precautions:

WARNING! Ground the product and verify outdoor installation grounding periodically. Failure to provide proper grounding can result in injury or death from electrical shock and can severely damage the equipment.

CAUTION! Improper modification can damage the product or lead to malfunction. Any modification voids your warranty.

2.6.1 ESD protection

Electrostatic discharge (ESD) can damage electronic circuits. Vaisala products are adequately protected against ESD for their intended use. However, it is possible to damage the product by delivering electrostatic discharges when touching, removing, or inserting any objects in the equipment housing.

To avoid delivering high static voltages to the product:

- Handle ESD-sensitive components on a properly grounded and protected ESD workbench or by grounding yourself to the equipment chassis with a wrist strap and a resistive connection cord.
- If you are unable to take either precaution, touch a conductive part of the equipment chassis with your other hand before touching ESD-sensitive components.
- Hold component boards by the edges and avoid touching component contacts.

3. Installation

3.1 Installing HMP155

Install HMP155 on a support arm approximately 2 m (7 ft) from the ground.

WARNING! Do not perform installation or maintenance procedures when there is a risk of thunderstorm or lightning activity in the area.

CAUTION! Always use the radiation shield to protect the sensor from rain and splashing water.

To prevent corrosion, oxidation, and seizing, use a non-conductive, non-water-soluble, non-silicone-based grease, such as ceramic or Teflon paste, between different kinds of metal.

Vaisala recommends installing HMP155 with the sensor head facing up.

To reach the optimal performance level of HMP155, Vaisala recommends installing HMP155 in a radiation shield, such as: DTR13, DTR503, or Stevenson screen.

The following table describes HMP155 radiation shields.

Table 11 Radiation shields

Radiation shield	Description
DTR13	For HMP155 with additional temperature probe Large 12-plate shield for best performance. Additional T-sensor adapter (221069) required.
DTR502	For additional temperature probe of HMP155. Small 10-plate radiation shield. Additional T-sensor adapter (221072) required.
DTR503	For HMP155 without additional temperature probe Compact 13-plate shield.

Radiation shield	Description
Stevenson screen	Adapter for Stevenson screen adapter (221321)

More information

- Mounting HMP155 and DTR13 on horizontal support arm (page 21)
- Mounting HMP155 inside radiation shield DTR503A (page 25)
- Mounting HMP155 on DTR13P44H support arm (page 28)
- Installation in Stevenson screen (page 31)

3.1.1 Mounting HMP155 and DTR13 on horizontal support arm

4-mm Allen key

Mount the humidity and temperature probe at the opposite end of the support arm from the solar radiation sensor.

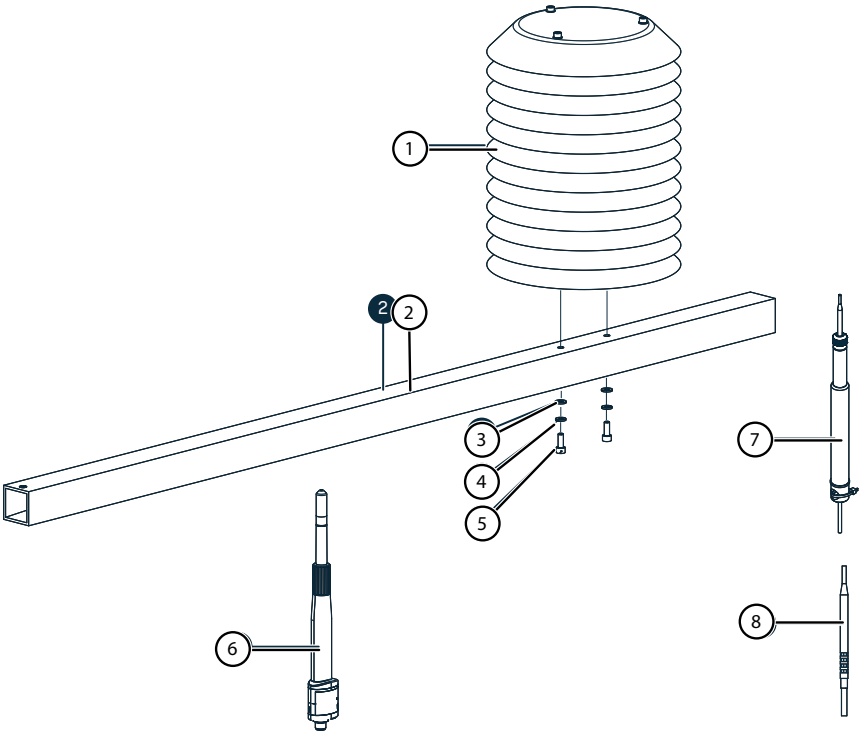

Figure 5 HMP155 and DTR13 installation accessories

1 Radiation shield (DTR13)
2 Support arm (212564)
3 Flat washer A5.3 DIN125 (2 pcs)
4 Spring washer B5 DIN127 (2 pcs)
5 Hex screw M5×16 DIN912 (2 pcs)
6 HMP155
7 T-probe adapter (221069) (optional)
8 Additional T-probe (optional)

1. Mount the radiation shield on the support arm. Tightening torque 5 Nm.

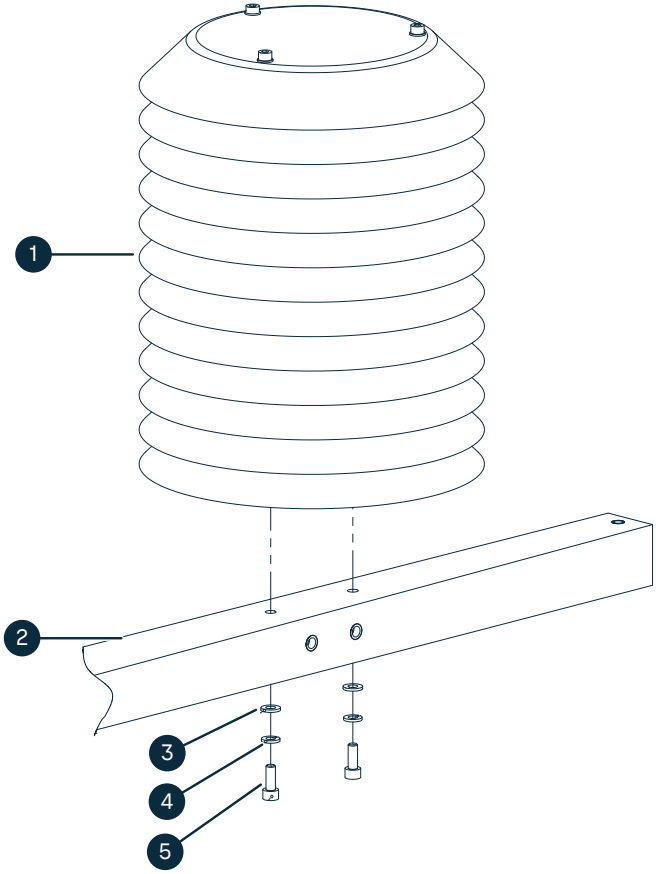

1 Radiation shield
2 Support arm
3 Flat washer A5.3 DIN125 (2 pcs)
4 Spring washer B5 DIN127 (2 pcs)
5 Hex screw M5×16 DIN912 (2 pcs)

2. Remove the protective cover from the probe.

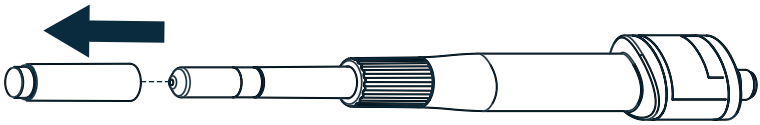

3. Lead the sensor cable through the connector cover, and attach the cable to the probe.

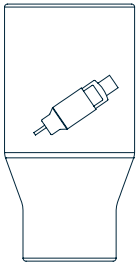

4. Loosen the screw of the sensor clamp with your fingers and insert the HMP155 probe in the larger outer hole at the bottom of the radiation shield.

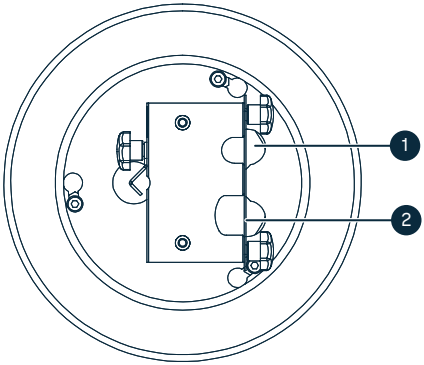

1 Hole for additional T-probe
2 Hole for HMP155 probe

5. Install the optional T-probe.

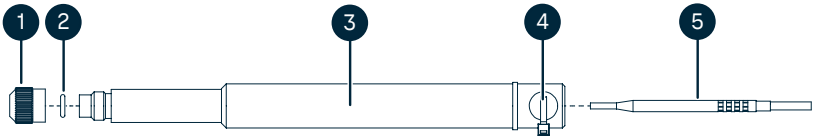

1 Knob
2 O-ring
3 T-probe adapter (221069)
4 Cable tie
5 T-probe

a. Insert the T-probe into to the T-probe adapter.
b. Fasten the T-probe into the adapter using the knob.
c. Fasten the cable to the adapter with a cable tie.
d. Insert the adapter into the smaller outer hole in DTR13.

Do not pull the T-probe cable from HMP155. The cable is fixed to the circuit board.

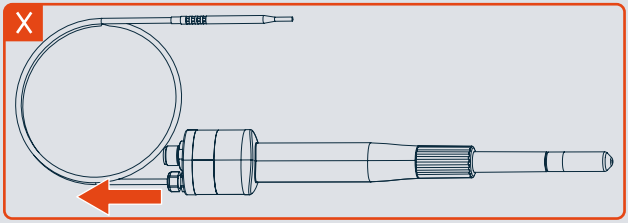

6. Push the connector cover over the probe connector.
7. Tighten the screw without using excessive force.
8. Lead the sensor cable along the support arm and attach the cable to the support arm with cable ties. Connect the sensor cable to the M12 connector in HMP155.

3.1.2 Mounting HMP155 inside radiation shield DTR503A

- 3-mm, 4-mm, and 5-mm Allen keys (provided)
- 10-mm wrench

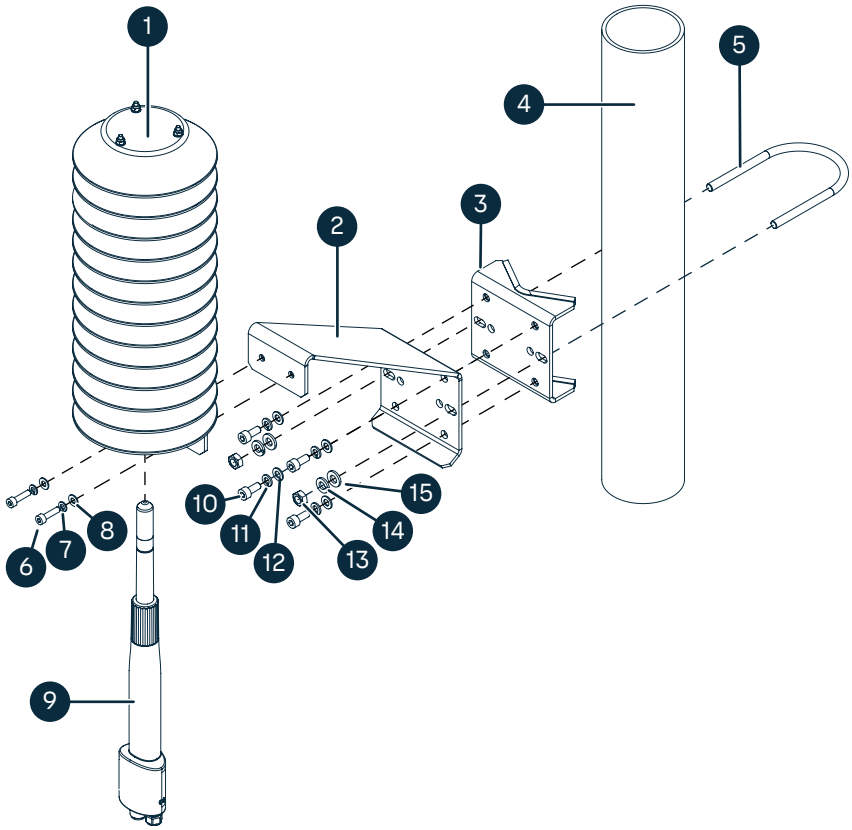

Figure 6 HMP155 and DTR503A installation accessories

1 Radiation shield (DTR503A)
2 Mounting plate
3 Support plate
4 Pole or support Ø 30 mm (1.18 in) or 60 mm (2.36 in)
5 U-bolt
6 Hex screw M4×16 DIN912 (2 pcs). Tightening torque 5 Nm.
7 Spring washer B4 DIN127 (2 pcs)
8 Flat washer A4,3 DIN125 (2 pcs)
9 HMP155
10 Hex screw M5×12 DIN912 (4 pcs)
11 Spring washer B5 DIN127 (4 pcs)
12 Flat washer A5,3 DIN125 (4 pcs)
13 Nut M6 DIN934 (2 pcs)
14 Spring washer B6 DIN127 (2 pcs)
15 Flat washer A6,4 DIN125 (2 pcs)

1. Attach the mounting plate to the support plate.
2. Secure the mounting plate to the pole.
3. Attach the radiation shield to the mounting plate.
4. Remove the protective cover from the probe.

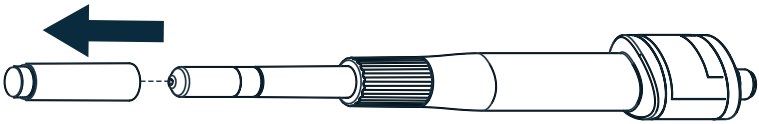

5. Lead the sensor cable through the connector cover, and attach the cable to the probe.

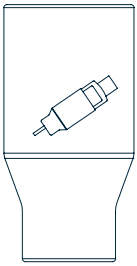

6. Loosen the compression fitting with your fingers and insert the probe inside the ring.

> Pay attention to the rubber insert.

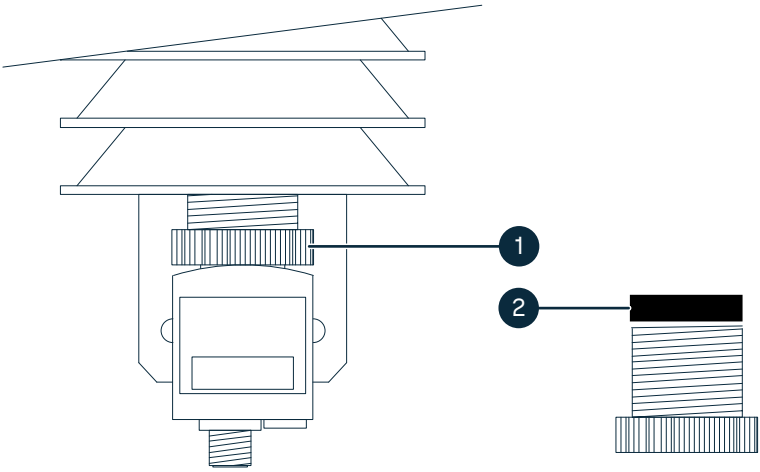

1 Compression fitting
2 Rubber insert

7. Tighten the compression fitting until it locks in place.

> **CAUTION!** Avoid using excessive force.

8. Push the connector cover over the probe connector.
9. Lead the sensor cable along the support arm and attach the cable to the support arm with cable ties. Connect the sensor cable to the M12 connector in HMP155.

3.1.3 Mounting HMP155 on DTR13P44H support arm

> 4-mm Allen key

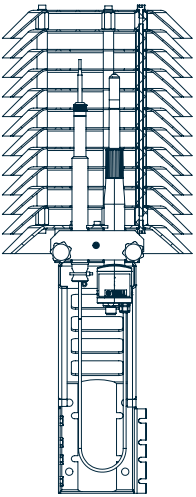

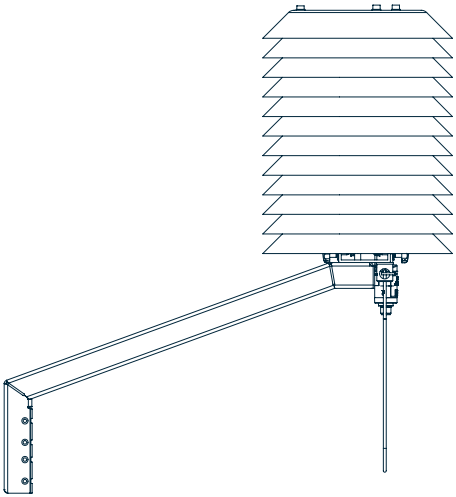

1. Mount the DKPFIXP44H support arm to the mast with the clamp and screws provided so that the center of the radiation shield, when mounted, is at 2 m (7 ft) height.
2. Mount the radiation shield DTR13 to the support arm and fix it with the screws provided.
3. Remove the protective cover from the probe.

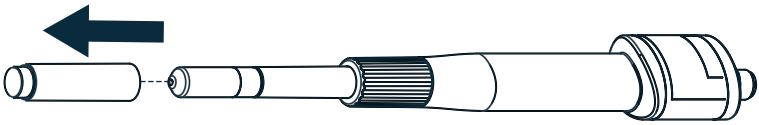

4. Lead the sensor cable through the connector cover, and attach the cable to the probe.

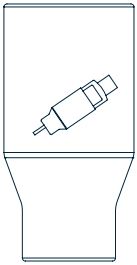

5. Loosen the screw of the sensor clamp with your fingers and insert the HMP155 probe in the larger outer hole at the bottom of the radiation shield.

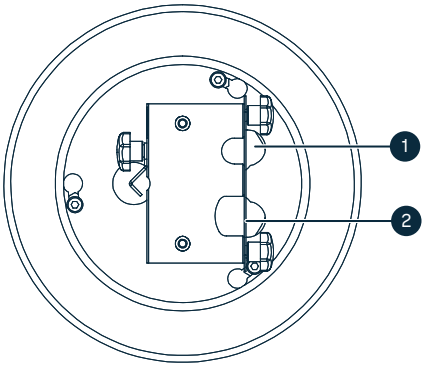

1 Hole for additional T-probe
2 Hole for HMP155 probe

6. Install the optional T-probe.

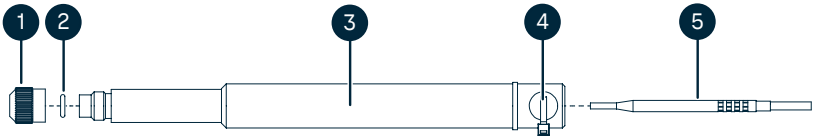

1 Knob
2 O-ring
3 T-probe adapter (221069)
4 Cable tie
5 T-probe

a. Insert the T-probe into to the T-probe adapter.
b. Fasten the T-probe into the adapter using the knob.
c. Fasten the cable to the adapter with a cable tie.
d. Insert the adapter into the smaller outer hole in DTR13.

Do not pull the T-probe cable from HMP155. The cable is fixed to the circuit board.

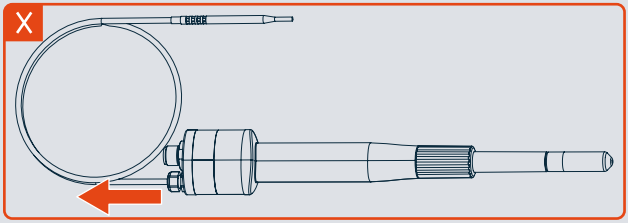

7. Push the connector cover over the probe connector.
8. Tighten the screw without using excessive force.
9. Lead the sensor cable along the support arm and attach the cable to the support arm with cable ties. Connect the sensor cable to the M12 connector in HMP155.

3.1.4 Installation in Stevenson screen

Vaisala provides Stevenson screen adapter (221321) for mounting HMP155 and additional temperature probe.

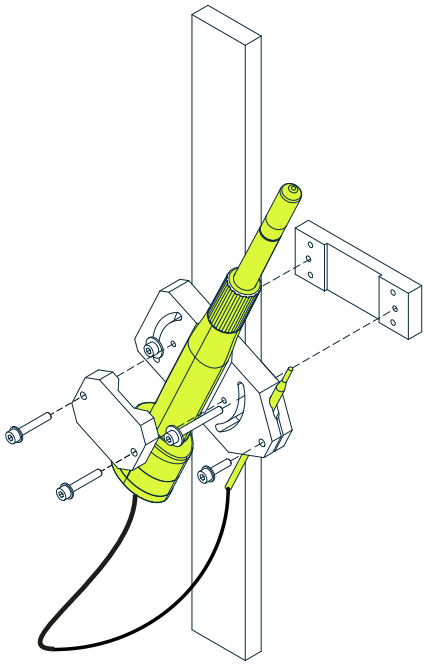

Figure 7 HMP155 with T-probe installed in Stevenson screen

3.2 Wiring HMP155

It is a good practice to protect the instrument cable according to low voltage electrical installations standards (IEC 60364-4-43, or equivalent standard).

Vaisala recommends protecting the power line of HMP155 probe and its cabling with a fuse or a circuit breaker, especially when the power supply can supply more than 2.5 A.
If you use Vaisala connection cables (223283, 220496, 220497, 220498), the recommended maximum sizes of the fuses and circuit breakers for protecting the power supply line are:

- 1 A with type B (IEC/EN 60898-1) tripping characteristics and specified for at least 28 V DC operation voltage
- 1 A cartridge fuse with T-type (IEC 60127-2) tripping characteristics and specified for at least 28 V DC operation voltage

If you use your own cables, make sure the current-carrying capacity of them adheres to the maximum fuse size.

Table 12 Vaisala cables 223283, 220496, 220497, 220498

Vaisala cables 223283, 220496, 220497, 220498	
Diameter	AWG 24
Conductor cross-section area	0.25 mm^2
Operational temperature	Up to 80 °C (176 °F)

When you use the recommended fuse or circuit breaker types, HMP155 is a limited-energy circuit according IEC 61010-1.

The current consumption of all the HMP155 probes is below 300 mA.

3.2.1 8-pin connector

HMP155 has an 8-pin M12 male connector on the bottom of the probe.

Figure 8 Wiring of HMP155 8-pin connector

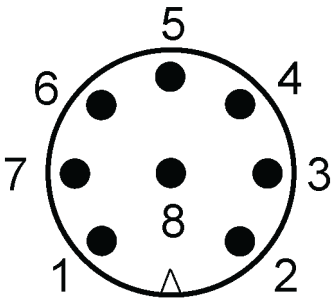

Table 13 Wiring of HMP155 8-pin connector

Pin	Open-end wire color	Passive output	Active output
1	White	Pt100	V_{OUT1}
2	Brown	RH_{OUT} 0 ... 1 V / RS-485-B	RS-485-B
3	Green	Pt100	A_{GND}
4	Yellow	Pt100	V_{OUT2}
5	Gray	Pt100	-
6	Pink	A_{GND} / RS-485-A	RS-485-A
7	Blue	V_{CC}	V_{CC}
8	Red	GND	GND

Pin	Open-end wire color	Passive output	Active output
-	Black	Shield	Shield

The shield is not a pin but a conductor in the connection cable.

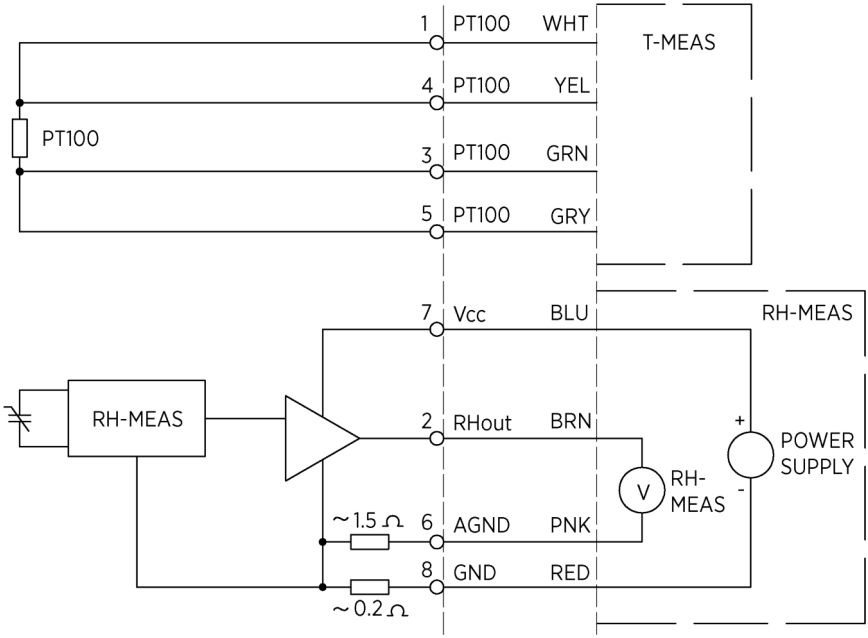

Figure 9 HMP155D block diagram and wiring

The left side shows the HMP155D block diagram. The right side shows an example of connections.

Make sure that the analog ground (A_{GND}) and the power ground (GND) are isolated from each other. If they are not isolated, analog T and RH readings may be disturbed.

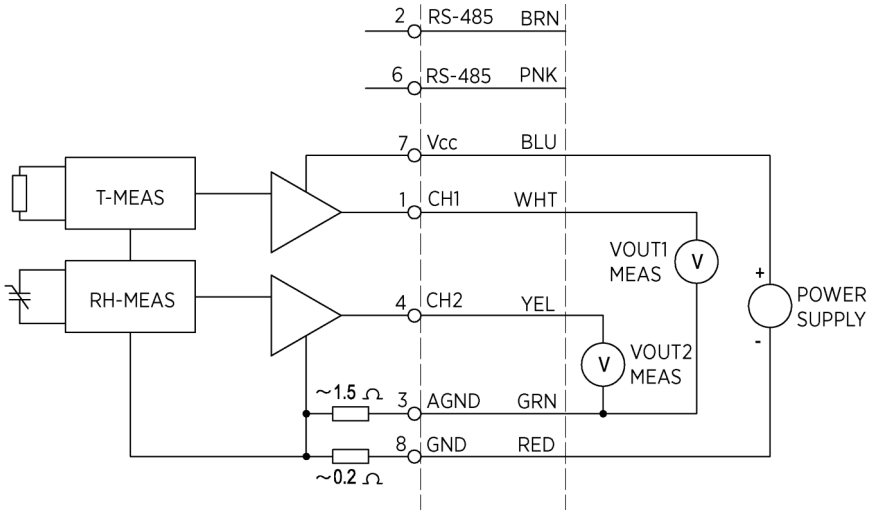

Figure 10 HMP155A/E block diagram and wiring

The left side of the figure shows the HMP155A/E block diagram. The right side shows an example of connections.

> Make sure that the analog ground (A_{GND}) and the power ground (GND) are isolated from each other. If they are not isolated, analog T and RH readings may be disturbed.

4. Operation

4.1 RS-485 interface

HMP155 supports a 2-wire RS-485 communication. The RS-485 interface is non-isolated and offers a maximum communication rate of 19200 bits/s. There is no internal termination for the RS-485. If any termination is needed, terminate the bus at both ends. The recommended termination is R termination with 120 Ω resistors.

Typically, termination resistors are only needed when the fastest communications rate (19200 bit/s) is used for longer distances. If you use resistors, take into account the possible increase in the current consumption.

4.2 Serial line communication

Connect a USB cable (221040) to the 8-pin connector on the bottom of HMP155. You do not need a separate power unit, the probe is powered through the USB port.

Before using the USB cable, you must install the USB driver on your computer, see Installing driver for USB cable (page 37).

Depending on your computer and the environmental conditions, heating and purge functions may not work properly with the USB cable due to limited USB powering capability.

HMP155 does not echo typed characters back to the terminal screen. To see the commands you type, enable the local echo setting in the terminal program.

When HMP155 is sending out data, it cannot receive a new command. Wait until HMP155 completes the response before typing the next command.

In the RUN mode, the sensor may send the measurement data message while you are typing the **S** command to stop the sending. You may need to repeat the **S** command. Note this when designing how computer programs access HMP155. You can use the **Esc** button on your keyboard to stop the sending.

Table 14 Default serial communication settings

Parameter	Value
Bauds	4800
Parity	Even

Parameter	Value
Data bits	7
Stop bits	1
Flow control	None

If you do not know the HMP155 serial connection settings, you can force the settings 19200 N 8 1 with the **#** command. The **#** command is only available during the 3 first seconds after startup.

After startup in the STOP mode, the probe outputs the software version and the command prompt.

```
HMP155 1.00
>
```

In the RUN mode, a measurement output starts immediately after startup.

In the POLL mode, the probe does not output anything after startup. See SMODE command (page 44).

4.2.1 Installing driver for USB cable

Before using the USB cable, install the USB driver on your computer. Follow the instructions provided with the USB cable.

Always install the latest USB driver from vaisala.com/downloads. Old versions may not work with all operating systems, such as Microsoft Windows 10.

On some occasions, Vaisala USB Device Finder does not work correctly in some Windows 10 installations. You can also use the search tool in the Microsoft Windows operating system to find the assigned COM port.

1. Make sure that the USB cable is not connected.
2. Download the driver from vaisala.com/downloads and follow the instructions provided with the cable.

   The installation may take several minutes.
3. When the driver is installed, connect the USB cable to a USB port on your computer.

   Windows detects the new device and uses the driver automatically.

4. Verify the COM port for the cable and the status of the cable with **Vaisala USB Device Finder**.

You do not need to uninstall the driver for normal use. To remove the driver files and all Vaisala USB cable devices, uninstall the entry for **Vaisala USB Device Driver** from your computer.

4.2.2 Connecting HMP155 with PuTTY terminal software

You can connect HMP155 with the PuTTY terminal software for Windows (see vaisala.com) and a USB computer connection cable.

1. Connect the USB serial interface cable to your computer and the RS-485 port of HMP155.
2. Start PuTTY.
3. Select the **Serial** settings category and check that the correct COM port is selected in the **Serial or USB line to connect to** field.

   You can check which port the USB cable is using with the **Vaisala USB Device Finder** program in your Windows **Start** menu.

4. Make sure that the other serial settings are correct for your connection. Change, if needed.

   See Table 14 (page 36).

5. To open the connection window and to start using the serial line, select **Open**.

   If PuTTY cannot open the serial port, restart it and check the settings.

6. To see what you are typing on the serial line, select **Terminal > Local Echo** and adjust it, if necessary.

> To access the configuration screen when a session is running, right-click over the session window and select **Change Settings** from the pop-up menu.

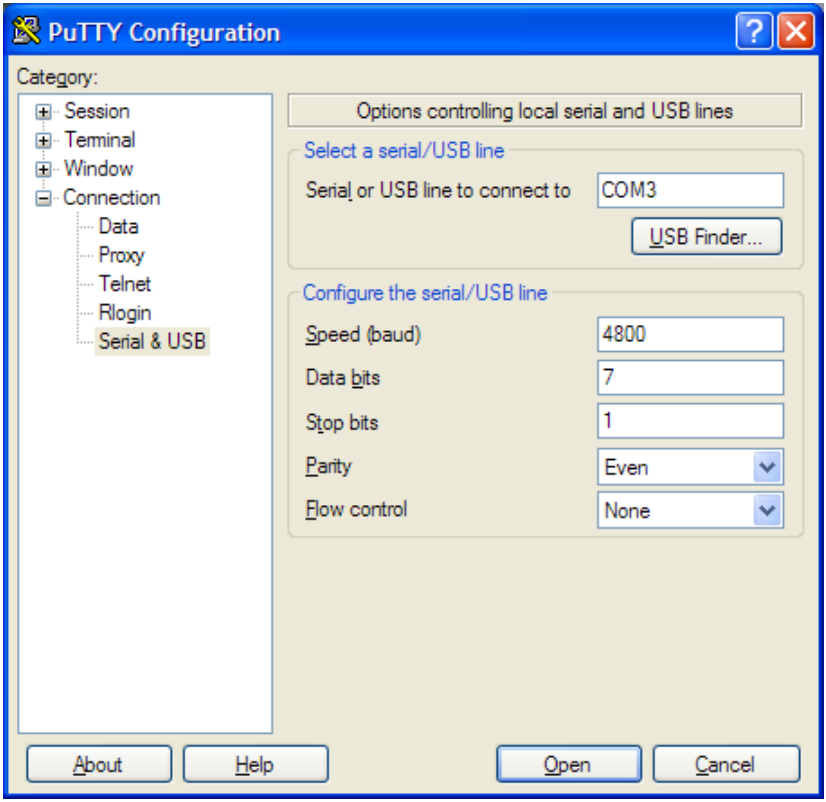

4.3 Temporary RS-485 connection option

All HMP155 models (HMP155A, HMP155E, and HMP155D) have an RS-485 connection available for service purpose.

To have a temporary RS-485 connection in the passive output version (HMP155D), hold down the **ADJ** button when switching on the probe, see Figure 12 (page 69). When HMP155 starts, pins 2 and 6 have the RS-485 signal. After the next startup, the default signals return to the pins.

The active output version with 2 voltage channels (HMP155A) includes also a solid RS-485 connection with dedicated signal pins that can be used as a temporary digital service port.

Do not use both digital and analog outputs in parallel continuously. It may affect the temperature measurement accuracy due to increased power consumption and probe self-heating.

More information

- Overview (page 68)
- 8-pin connector (page 33)

4.4 HMP155 commands

Most of the following commands are relevant only in the digital output version of HMP155. To issue a command, type it on your computer and press **Enter**.

Table 15 Measurement commands

Command	Default setting	Description
R	-	Start continuous output
S	-	Stop continuous output
INTV [0–255 S/MIN/H]	2 s	Set continuous output interval (RUN mode)
SEND [0–99]	-	Output reading once
SMODE [STOP/RUN/POLL/SEND]	STOP	Set serial interface mode
OPEN [0–99]	-	Open temporary connection to POLL mode device
CLOSE	-	Close temporary connection (back to POLL mode)
SDELAY [0–255]	-	View or set user port (RS-485) answer minimum delay
SERI [baud p d s]	-	User port settings (default: 4800 E 7 1) baud: 300–115200
ADDR [0–99]	0	Set probe address (POLL mode)

Table 16 Formatting commands

Command	Description
FORM	Set the output format of **SEND** and **R** commands
LASKE 6	Sets the default output format used in Vaisala weather stations AWS310, AWS810, and RWS200 (non-heated probe option)
LASKE 7	Sets the default output format used in Vaisala weather stations AWS310, AWS810, and RWS200 and Vaisala Forward Scatter Sensor FD70 (heated probe option)
TIME [HH MM SS]	Set or display time
UNIT	Select metric or non-metric output units

Table 17 Purge commands

Command	Description
PUR	Set automatic sensor purge

Table 18 Calibration and adjustment commands

Command	Description
#	Force connection settings 19200 baud, N, 8, 1
ACAL [0/1]	Analog output calibration and adjustment
CDATE	Set calibration date
CRH	One or two-point relative humidity calibration and adjustment.
CT	One or two-point temperature calibration and adjustment
CTA	One or two-point additional temperature probe calibration and adjustment.
FCRH	One or two-point relative humidity calibration and adjustment after sensor change
CTEXT	Type text to calibration information field
L	Display user adjustment parameters
LI	Display new values for user adjustment parameters

Table 19 Analog output commands

Command	Description
AMODE	View analog output modes
ASEL	Set or view analog output quantities and scaling

Command	Description
AERR	Change analog error output values
ATEST	Force analog outputs to entered values

Table 20 Other commands

Command	Description
?	Output information about the device
??	Output information about the device in POLL mode
ERRS	List present probe errors
FILT [0.1–1]	Set the result filtering
HELP	List available commands
PRES [hPa]	Set the value for pressure compensations
RESET	Reset the probe
VERS	Display software version information
XHEAT	Sensor heating
XPRES [bar]	Set temporary value for pressure compensations

4.5 Measurement commands

4.5.1 R command

Use the **R** command to start the continuous output of measurements. The command starts a temporary RUN mode. To change to the permanent RUN mode, use the **SMODE** command.

```
>r
RH= 33.0 %RH T= 22.1 'C
>
```

If a value is too long to fit in the output or if there is an error in the quantity output, the value is displayed with stars (*).

To adjust the output format, use the **FORM** command.
To change the output interval, use the **INTV** command.

4.5.2 S command

Use the **S** command to end the RUN mode. After the **S** command, you can use any command.

To stop the output, you can press the **Esc** or reset the probe.

To change the default power-up operation mode, see SMODE command (page 44).

4.5.3 INTV command

Use the **INTV** command to set the output interval for the RUN mode. The default value is 2 seconds.

```
INTV xxx yyy
```

Parameter	Description
xxx	Output interval (0 ... 255) where 0 produces an output whenever a new measurement is made. Interval 1 s produces repeats of the previous measurement if no newer measurement is available.
yyy	Unit (s, min, or h)

Example

```
>intv 1 min
Interval        : 1 min
>
```

4.5.4 SEND command

Use the **SEND** ADDR command, where **ADDR** is the address of the probe, to view the reading once in the STOP mode.

You can use **SEND** without the address in the STOP mode. The output format depends on the parameters the probe can print.

The following example shows **SEND** without a parameter.

```
>send
RH= 24.9 %RH T= 22.1 'C
>
```

4.5.5 SMODE command

Use the **SMODE** command to set the user port to permanent STOP, RUN, POLL, or SEND mode.

```
SMODE [xxxx]
```

The output mode you select is activated after power outages.

Parameter	Description
xxxx	STOP, RUN, POLL, or SEND

Table 21 Output modes

Mode	Output	Available commands
STOP	Only with the **SEND** command	All (default mode)
RUN	Automatic output	**S**
POLL	Only with the **SEND** [addr] command	**??** **SEND** [addr] **OPEN** [addr]

Example

```
>smode
Serial mode    : STOP ? POLL
>
```

4.5.6 OPEN command

When all probes on the RS-485 bus are in the POLL mode, use the **OPEN** command to set 1 probe temporarily to STOP mode so that you can enter other commands.

```
OPEN ADDR
```

Parameter	Description
ADDR	Address of the probe (0 ... 99)

4.5.7 CLOSE command

Use the **CLOSE** command to set the probe in temporary POLL mode. After this you can only use the commands **OPEN**, **SEND**, and **??**.

Example

```
>close

line closed
```

4.5.8 SDELAY command

Use the **SDELAY** command to view or set the minimum answer delay for the RS-485 port.

The **SDELAY** value can be 0–255. The default value is 10.

Parameter	Description
0	No extra delay added
1	4–8 ms extra delay
255	1024 ms extra delay

Example

```
>sdelay 15
Serial delay   :   15
>
```

4.5.9 SERI command

Use the **SERI** serial line command to set the communication settings.

```
SERI [BAUD][PARITY][DATA][STOP]
```

Parameter	Description
BAUD	Bit rate (300, 600, 1200, 2400, 4800, 9600, 19200)
PARITY	Parity (n = none, e = even, o = odd)
DATA	Data bits (7 or 8)
STOP	Stop bits (1 or 2)

To activate the new communication settings, reset the probe.

You can change the settings one parameter at a time or all parameters at once.

Example

Changing baud only

```
>seri 4800
Baud P D S     : 4800 E 7 1
>
```

Changing all parameters

```
>seri 9600 e 7 1
Baud P D S     : 9600 E 7 1
>
```

4.5.10 ADDR command

Addresses are required only in the POLL mode for multi-purpose RS-485 buses.

Use the **ADDR** command to input the RS-485 probe address.

- Without parameters, the **ADDR** command displays current probe address.
- When you specify a parameter, **ADDR** sets the probe address to the given value.

```
ADDR [0 … 99]
```

Parameter	Description
0 ... 99	Address (default = 0)

Example

The probe is configured to address 2.

```
>addr
Address        : 0 ? 2
>
```

More information

- SMODE command (page 44)

4.6 Formatting commands

4.6.1 FORM command

Use the serial line command **FORM** to change the format or select certain quantities for the output commands **SEND** and **R**.

```
FORM x
```

Parameter	Description
x	Formatter string

The formatter string consists of quantities and modifiers. You can only type a maximum of 73 characters after the command on the command line.

When you type the command, use the abbreviations of the quantities.

Table 22 Quantities measured by HMP155

Quantity	Abbreviation	Metric unit	Imperial unit
Relative humidity	RH	%RH	%RH
Temperature	T	°C	°F
Additional T-probe temperature	Ta	°C	°F

Table 23 Quantities calculated from measured quantities

Quantity	Abbreviation	Metric unit	Imperial unit
Dew point / Frost point temperature (Td/f)	TDF	°C	°F
Dew point temperature (Td)	TD	°C	°F
Mixing ratio (x)	X	g/kg	gr/lb
Wet bulb temperature (Tw)	TW	°C	°F

The modifiers are shown in the following table.

Table 24 FORM command modifiers

Modifier	Description
`quantity`	Quantity name (for example RH, T or TDF)
`x.y`	Length modifier (number of digits and decimal places) In the **FORM** command, use the length modifier only once. It will be applied to all the data strings in the same message.
`#t`	Tabulator
`#r`	Carriage return
`#n`	Line feed
`“"`	String constant
`#xxx`	Special character with decimal code "xxx"
`U5`	Unit field and length
`ADDR`	Probe address with 2 characters [00–99]
`CS2`	Modulus-256 checksum of message sent so far, hexadecimal format.
`CS4`	Modulus-65536 checksum of message sent so far, hexadecimal format.
`ERR`	Error flags for T, Ta, RH, MEM; [0000–1111]; 0 = no error, 1 =error T = temperature measurement error Ta = measurement error in the additional T-probe RH = humidity measurement error MEM = memory error For a more detailed error message, use the **ERRS** command and see Table 29 (page 66).
`STAT`	Probe heating status in 1 character field, for example:
	N = no heating
	h = warmed probe active
	H = purge heating active
	S = purge cooling active
	X = extra sensor heating active
`SNUM`	Probe serial number
`TIME`	Time [hh:mm:ss]

```
>form "Temperature=" 5.2 t #r#n
OK
>send
Temperature=   24.23
>

>form "Twet=" 6.3 tw U3 #t "T=" t U3 #r#n
OK
>send
Twet=    11.290'C       T=    24.231'C
>

>form 5.1 rh #t t #t tdf #r#n
OK
>send
   15.6    24.2    -3.1
>
```

FORM / command returns the default output format. The default output format depends on the device configuration. **FORM** command without formatter string returns the current output format of the probe.

```
>form /
OK
>send
 RH= 23.8 %RH T= 19.4 'C
>
```

Checksums are calculated as described in the following equations.

$$cs_2 = \sum_{i=1}^{n} b_i \bmod 256$$

$$cs_4 = \sum_{i=1}^{n} b_i \bmod 65536$$

$$cs_x = b'_1 \oplus b'_2 \oplus \ldots \oplus b'_n$$

$$b'_i = b_i \ if \ b_i \neq 36 \ and \ b_1 \neq 42$$

$$b'_i = 0 \ if \ b_i = 36 \ or \ b_1 = 42$$

Table 25 Symbols in FORM checksum equations

Symbol	Description
cs_2	Value of CS2 checksum in the output message.

Symbol	Description
cs_4	Value of CS4 checksum in the output message.
cs_x	Value of CSX checksum in the output message.
b_i	Value of the byte at position i (1-based) in the output message.
n	Number of bytes in the output message before the CS2, CS4, or CSX field (including earlier checksum fields, if any).
⊕	Bit-wise exclusive OR operator.
36	Byte value of ASCII $ character.
42	Byte value of ASCII * character.

4.6.2 LASKE 6 and LASKE 7 commands

Use the **LASKE 6** and **LASKE 7** commands to change the message output format.

- **LASKE 6** is a formatting command for Vaisala preconfigured HMP155 probe used in Vaisala Weather Stations AWS310, AWS810, and RWS200 (non-heated probe option)
- **LASKE 7** is a formatting command for Vaisala preconfigured HMP155 probe used in Vaisala Weather Stations AWS310, AWS810, and RWS200 and Vaisala Forward Scatter Sensor FD70 (heated probe option)

```
FORM /
LASKE 6
FORM /
```

```
FORM /
LASKE 7
FORM /
```

Example

LASKE 6

```
 \001 "HMP155," ADDR \002 3.2 RH "," T "," U2 "," Td "," Tdf "," Tw "," x
"," STAT "," ERR \003 CS4 \r \n
```

LASKE 7

```
\001 "HMP155," ADDR \002 3.2 RH "," Ta "," U2 "," Td "," Tdf "," Tw "," x
"," STAT "," ERR \003 CS4 \r \n
```

4.6.3 TIME command

Use the **TIME** serial line command to set or display the current time.

```
TIME HH MM SS
```

When you set the current time for the probe with the **TIME** command, the time is displayed when the probe is turned on. The time setting is not stored. At reset or when the probe is turned off, the time returns to 00:00:00.

Example

```
> time 12 00 00
Time           : 12:00:00
>
```

4.6.4 UNIT command

Use the **UNIT** command to select metric or non-metric output units.

```
UNIT M/N
```

Parameter	Description
M	Metric units
N	Non-metric units

Example

```
>unit n
Units   : non metric
>
```

4.7 Chemical purge commands

4.7.1 PUR command

With the **PUR** command, you can enable or disable automatic and power-up chemical purge and set the purge interval.

If HMP155 is exposed to chemicals, Vaisala recommends performing chemical purge at least once in 720 minutes (12 hours). If not, the interval can be longer.

CAUTION! Do not modify the `Duration`, `Settling`, and `Temperature` settings unless instructed to do so. The sensor element may be permanently damaged from overheating.

Type **PUR** and press **ENTER** to proceed. The maximum interval is 14400 minutes (10 days).

```
>pur
Interval Purge : OFF ?
Interval       : 720 min ?
Power-up Purge : OFF ?
Duration       : 240 s ?
Settling       : 240 s ?
Temperature    : 180 'C ?
>
```

To activate the new interval settings immediately, reset the probe.

When chemical startup purge is enabled, wait for 8 minutes after startup before taking measurements. The output channels are locked for the first operation minutes to the initial measured values.

4.8 Extra sensor heating (Xheat) commands

HMP155 extra sensor heating follows the factory default values. You can enable or disable the function, change the RH limit, and define the heating temperature and duration of this function.

The output channels are locked during extra sensor heating and cooling period.

For meteorological applications, the extra sensor heating function is rarely used as radiation shield prevent water droplets from going directly to humidity sensor.

4.8.1 XHEAT command

You can enable or disable the extra sensor heating with the **XHEAT** command.

```
>xheat on
Extra heat     : ON
>xheat off
Extra heat     : OFF
>
```

To configure extra sensor heating, use the **XHEAT** command without parameters. Type the values after the question mark. The following table lists the available ranges.

Available ranges	Description
0–100 %RH (default: 95 %RH)	Extra heating RH limit (heating function starts up above the setpoint)
0–200 °C (default: 100 ºC)	Extra heating temperature
0–255 s (default: 30 s)	Extra heating time

To see the current values, use the **XHEAT** * command.

After the defined **XHEAT** duration, there is an additional cooling time of 10 seconds before outputs are updated.

Example

```
>xheat *
Extra heat     :      OFF
RH limit       :       95 %RH
Temperature    :      100 'C
Duration       :       30  s
>
```

More information

- Extra sensor heating (Xheat) option (page 16)

4.9 Analog output configuration commands

The analog outputs are set in the factory according to the order form. To change the settings, use the configuration commands.

You cannot use the serial line commands **AMODE**, **ASEL** and **ATEST** with the passive output version of HMP155.

4.9.1 # command

Use the **#** command to force the settings 19200 baud, no parity, 8 data bits, 1 stop bit during the first 3 seconds after power-up.

The settings last for one session. Next time you connect, HMP155 reverts to the settings set with the **SERI** command.

More information

- SERI command (page 45)

4.9.2 AMODE command

Use the serial line to select and scale the analog output quantities. Connect HMP155 to the computer and open the terminal connection between your computer and the sensor.

HMP155 must be in the adjustment mode for the **AMODE** command to work. To switch the probe to the adjustment mode, hold down the **ADJ** button until a green LED lights up.

Check the analog output modes with the **AMODE** command.

Table 26 Analog output modes

Analog output mode	Description
3	0–1 V
4	0–5 V
5	0–10 V

Analog output calibration is valid only for the factory settings. If you change the analog output mode with **AMODE** command, you must continue by entering the **ACAL** command, see ACAL command (page 83).

Example

```
>amode 3 3
Ch0 : 0 ... 1V
Ch1 : 0 ... 1V
>
```

4.9.3 ASEL command

Use the **ASEL** command to select the quantities and scaling for analog outputs of HMP155.

You can select optional quantities only if you selected them when you placed your order.

Quantities and their abbreviations are listed in the following tables.

Table 27 Quantities measured by HMP155

Quantity	Abbreviation	Metric unit	Imperial unit
Relative humidity	RH	%RH	%RH
Temperature	T	°C	°F
Additional T-probe temperature	Ta	°C	°F

Table 28 Quantities calculated from measured quantities

Quantity	Abbreviation	Metric unit	Imperial unit
Dew point / Frost point temperature (Td/f)	TDF	°C	°F
Dew point temperature (Td)	TD	°C	°F
Mixing ratio (x)	X	g/kg	gr/lb
Wet bulb temperature (Tw)	TW	°C	°F

```
ASEL [CH1 CH2] [low1 high1 low2 high2]
```

Parameter	Description
CH1	Quantity of channel 1
CH2	Quantity of channel 2

Parameter	Description
`low1`	Low limit of channel 1
`high1`	High limit of channel 1
`low2`	Low limit of channel 2
`high2`	High limit of channel 2

Example

To set the scaling of the outputs without changing the quantities, type the command without parameters. HMP155 prompts for the limits. Note that **ch0** is channel 1 and **ch1** is channel 2.

```
>asel
Ch0 T    lo    :   -40.00 'C ?
Ch0 T    hi    :    60.00 'C ?
Ch1 RH   lo    :     0.00 %RH ?
Ch1 RH   hi    :   100.00 %RH ?
```

Example

To set the output quantities of the channels, type the quantities as parameters. The probe prompts for the limits. Always specify the quantities for both channels.

```
>asel t td
Ch0 T    lo    :   -40.00 'C ?
Ch0 T    hi    :    60.00 'C ?
Ch1 Td   lo    :   -60.00 'C ?
Ch1 Td   hi    :    40.00 'C ?
```

Example

To set the quantities and scaling with a single command, type the quantities and limits as parameters according to the command syntax.

```
>asel rh td 0 100 -60 60
Ch0 RH   lo    :     0.00 %RH
Ch0 RH   hi    :   100.00 %RH
Ch1 Td   lo    :   -60.00 'C
Ch1 Td   hi    :    60.00 'C
```

4.9.4 AERR command

Use the **AERR** serial line command to set or view the error output from analog outputs.

```
AERR CH0ERR/CH1ERR
```

Parameter	Description
CH0ERR	Analog output
CH1ERR	Analog output

The error output value must be within the valid range of the output mode.

Example

```
>aerr
Ch0 error out  : 10.000V ? 0
Ch1 error out  : 1.000V ? 0
>
```

4.9.5 ATEST command

Use the serial line to test the operation of all the analog outputs. Use the **ATEST** command to force the analog outputs to entered values. The set values remain valid until you enter the **ATEST** command without parameters or reset the probe. Typing the **ATEST** command without parameters outputs the current output value.

```
ATEST V V
```

Parameter	Description
V	Output value for channel 1 (V)
V	Output value for channel 2 (V)

Example

```
>  atest
   2.412     6301
   1.943     5090
>
```

Example

```
>  atest 1.5 1.5
   1.500     3948
   1.500     3948
>
```

4.10 Pressure compensation commands

4.10.1 PRES and XPRES commands

Use the **PRES** command to set ambient pressure value for fixed pressure compensation.

If the value is changed frequently, use the **XPRES** serial line command. Its value is cleared to 0.0 at reset; if it is set to other than 0, it overrides the setting given with the **PRES** command.

In normal pressure conditions, the **PRES** command is not needed. If mixing ratio is used in high altitudes, pressure changes increase the mixing ratio.

Use the serial line and do the following:

```
PRES a.aaaa
```

```
XPRES a.aaaa
```

Parameter	Description
a.aaaa	Ambient pressure value (bar)

Example

```
>pres
Pressure    : 1.013 bar ?
>
```

Example

```
>xpres
Pressure: 0.000 bar?
>
```

4.11 System commands

The system commands are used for setting the filtering level, checking the probe configuration, listing available commands and possible error messages, and displaying the probe software information.

4.11.1 ? command

Use the **?** command to check the current probe configuration. If the probe is in the POLL mode, use the **??** command.

Example

```
>?
HMP155 1.00
Serial number  : C1230001
Batch number   : B2350090
Module number  : C4840248
Sensor number  : B4250001
Sensor model   : Humicap 180
 date      : YYYYMMDD
 info      : NONE
Time           : 00:01:06
Serial mode    :     STOP
Baud P D S     :     4800 E 7 1
Output interval:        2 S
Serial delay   :        0
Address        :        0
Pressure       :    1.013 bar
Filter         :    0.800
Ch0 output     : 0 ...  1 V
Ch1 output     : 0 ...  1 V
Ch0 error out  :     0.00 V
Ch1 error out  :     0.00 V
Ch0 RH   lo    :     0.00 %RH
Ch0 RH   hi    :   100.00 %RH
Ch1 T    lo    :   -40.00 'C
Ch1 T    hi    :    60.00 'C
>
```

4.11.2 ERRS command

Use the **ERRS** command to display the error messages.

Example

```
>errs
No errors
>
```

More information

- Errors (page 66)

4.11.3 FILT command

Use the **FILT** command to set the filtering level. The default setting is 0.8. The output is calculated based on the following formula: [(new result * filt) + (old result * (1.0 - filt))]. With **FILT** value 1, the probe only takes the latest measurement into account. With **FILT** value 0.1, a new output is a combination of the previous output (90 %) and the latest measurement (10 %).

```
FILT xxx
```

Parameter	Description
xxx	0.1 ... 1 1.0 = no filter 0.1 = about 16 moving average

Example

```
>filt
Filter          : 0.800 ?
>
```

4.11.4 HELP command

Use the **HELP** command to list the available commands.

Example

```
>help
?
ACAL ch0/ch1
ADDR 0...99
AERR err1 err2
AMODE ch1 ch2
ASEL quantity1 quantity2 low1 high1 low2 high2
ATEST value1 value2
CDATE 'cal.date'
CLOSE
CRH
CT
CTA
CTEXT 'cal.info'
ERRS
FCRH
FILT value
FORM 'format string'
HELP
INTV 0...255 s/min/h
L
LI
OPEN addr
PRES bar
PUR on/off
R
RESET
S
SDELAY 0...255
SEND addr
SERI baud p d s
SMODE stop/run/poll
TIME hh:mm:ss
UNIT m/n
VERS
XHEAT on/off
XPRES bar
>
```

4.11.5 VERS command

Use the **VERS** command to display the software version.

Example

```
>vers
HMP155 1.6
>
```

4.11.6 RESET command

Use the **RESET** command to reset the device. The user port switches to the startup output mode you have selected with the **SMODE** command.

The **RESET** command returns the passive output version to analog output mode.

Example

```
>reset

HMP155 1.00
>
```

5. Maintenance

5.1 HMP155 maintenance

Preventive maintenance for HMP155 includes:

- Checking that the probe is securely mounted.
- Checking that the radiation shield and cable are intact.
- Cleaning the radiation shield using mild detergent and a soft, lint-free cloth.
- Changing the probe filter once a year.

If the measurement site is exposed to air pollution and dust, the probe filter may need to be changed more frequently.

- Sending the sensor to Vaisala for calibration once a year.
- Sending the sensor to Vaisala for calibration if the sensor readings seem inaccurate.

Do not pull the T-probe cable from HMP155. The cable is fixed to the circuit board.

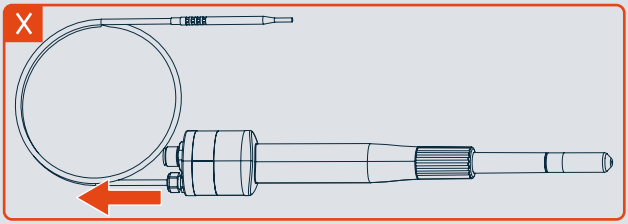

5.1.1 Cleaning

Clean the probe with a soft, lint-free cloth moistened with mild detergent.

5.1.2 Changing HMP155 probe filter

Over time, the probe filter becomes contaminated with matter that you cannot remove by cleaning. When this happens, the response time becomes longer and measurement accuracy decreases.

CAUTION! The Pt100 temperature sensor is soldered to the probe. Do not try to remove it. The sensor does not require maintenance.

1. Remove the probe from inside the radiation shield.
2. Carefully remove the filter from the probe. Holding the filter by the plastic part, rotate the filter counterclockwise and pull it out.

> **CAUTION!** Do not touch the sensor heads.

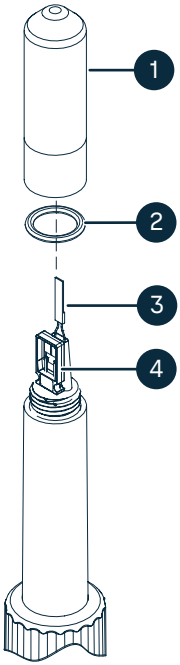

1 Filter
2 O-ring
3 Pt100 temperature sensor
4 HUMICAP humidity sensor

3. After removing the filter, check the O-ring and change it if necessary.
4. Install the new filter carefully without delay.
5. Install the probe back inside the radiation shield.

5.1.3 Changing HUMICAP sensor

You can change INTERCAP, HUMICAP180R, and HUMICAPR2 sensor yourself.

CAUTION! Never replace INTERCAP with HUMICAP180R, or INTERCAP with HUMICAPR2, or the other way round.
You can replace HUMICAP180R with HUMICAPR2, and the other way round.

CAUTION! In HUMICAP180RC/R2C and INTERCAPC models, the temperature sensor is integrated with the relative humidity sensor and Vaisala recommends sending HUMICAP180RC/R2C and INTERCAPC sensors to Vaisala Service.
If you change the sensor yourself, these instructions apply, except that before removing the damaged sensor, you must unsolder the connections from the temperature sensor pins. You must also solder the new temperature sensor connections to the temperature sensor pins. Be careful when soldering the sensor pins.

1. Remove the filter from the probe.
2. After removing the filter, check the O-ring and change it, if necessary.

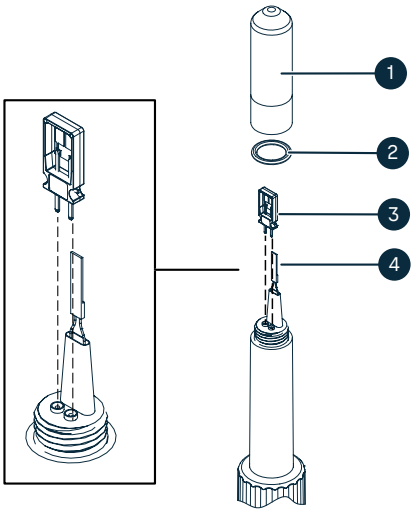

Figure 11 Changing INTERCAP/HUMICAP180R/HUMICAPR2 sensors

1 Filter
2 O-ring
3 HUMICAP sensor
4 Pt100 temperature sensor

3. Remove the damaged sensor and insert a new one.

CAUTION! Handle the new sensor by the plastic socket. Do not touch the sensor plate.

4. After the sensor change, perform humidity calibration and adjustment.
5. Attach a new filter on the probe.

More information

- Changing HMP155 probe filter (page 63)
- Adjusting and calibrating relative humidity after sensor change (page 77)

5.2 Errors

In an error state, HMP155 does not measure the quantity and shows the following output:

- Analog channel: `0 V`
  Use the **AERR** serial line command to change the value.
- The serial port output: `***`

You can check the error message through the serial interface by using the **ERRS** command. If the error persists, contact Vaisala Technical Support.

If you do not know the HMP155 serial connection settings, you can force the settings 19200 N 8 1 with the **#** command. The **#** command is only available during the 3 first seconds after startup.

Error state uses settings 19200 N 8 1 automatically after a reboot.

Table 29 HMP155 error messages

Error message	Description	Action
`T MEAS error`	Error in temperature measurement	Check the HUMICAP sensor.
`T REF error`		Contact Vaisala Service Center.
`TA MEAS error`	Error in T-probe measurement	Check the additional temperature probe.
`TA REF error`		Contact Vaisala Service Center.

Error message	Description	Action
`F MEAS error`	Error in humidity measurement	Check the HUMICAP sensor.
`F REF1 error`		Contact Vaisala Service Center.
`F REF3 error`		
`Program flash checksum error`	Internal error	
`Parameter flash checksum error`		
`INFOA checksum error`		
`SCOEFS checksum error`		

More information

- AERR command (page 56)

6. Calibration and adjustment

6.1 Overview

HMP155 is fully calibrated and adjusted when shipped from factory. Vaisala recommends sending HMP155 for calibration and adjustment to Vaisala. See Product returns (page 99).

Vaisala recommends calibrating HMP155 once a year.
Depending on the application, you may need to make more frequent checks. Always perform calibration when you think that HMP155 is not within the accuracy specifications.

If you calibrate and adjust HMP155 yourself, you have the following options:

- Use the adjustment buttons on the probe.
- Use the serial line connection.
- Use the MI70 measurement indicator.

Vaisala recommends performing the temperature calibration and adjustment first, if you perform both temperature and humidity calibration.

In the passive output version of HMP155, you cannot adjust the temperature.

In the active output version of HMP155, you can calibrate and adjust both the temperature (T) and additional T-probe temperature (Ta). See Two-point temperature adjustment (page 74).

Before HMP155 calibration, Vaisala recommends taking HMP155 to the calibration environment (for example, room temperature) well in advance, to minimize the stabilization time and to get best calibration result.

If you have the chemical purge option, always perform chemical purge before calibration and adjustment.

Vaisala recommends carrying out RH adjustment as a two-point adjustment. With one-point adjustment, you can achieve the required accuracy if the actual measurement environment (RH and T) is the same as the one-point adjustment environment.

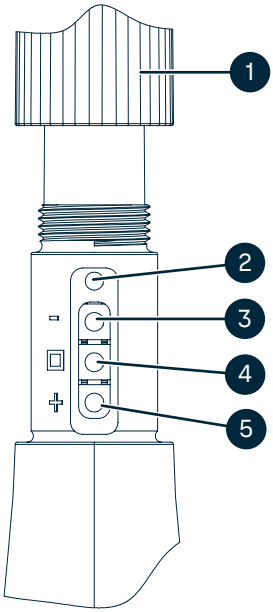

Figure 12 HMP155 adjustment buttons

1 Protective cover (unscrewed)
2 Protective plug (lifted up)
3 Down button
4 ADJ button
5 Up button

There is a 2-color indicator LED (green and red) under the protective plug and next to the **Down** button.

If you use a warmed probe (HMP155 active output version option), probe heating is interrupted when you press the **ADJ** button. Allow sufficient time for the probe to reach ambient temperature before starting the adjustment procedure.

Fixed pressure compensation value of 1.01325 bar is used when in adjustment mode.

6.2 Push-button calibration

Push-button calibration is not available for the additional temperature probe.

You can calibrate and adjust HMP155 with the adjustment buttons on the probe. Carry out the two-point humidity adjustment by using 2 relative humidity references: for example, saturated salt points 11 %RH (LiCl) and 75 %RH (NaCl). The difference between the humidity reference points must be at least 30 %RH. The difference between the temperature reference points must be at least 30 °C.

In push-button calibration, the probe outputs are by default relative humidity in the range 0–100 %RH in CH1 and temperature in the range −40 ... +60 °C (−40 ... +140 °F) in CH2.

Before attempting calibration or adjustment, set the probe to the adjustment mode by pressing and holding the **ADJ** button until a green LED lights up. This turns off the heating and the additional temperature probe if you are using either of them. After that HMP155 is ready to be checked and calibrated and adjusted. Because the additional temperature probe is turned off during the adjustment mode, you do not need to insert it into the same reference conditions with the humidity probe.

6.2.1 Performing two-point humidity and temperature adjustment

1. Carry out chemical purge, if available.
2. Uncover the adjustment buttons on the probe by removing the protective cover and the calibration seal.
3. Open the protective plug.

   There are 3 buttons marked **-**, □, and **+**. There is also a 2-colored indicator LED. See Figure 12 (page 69).
4. To change HMP155 to the adjustment mode, press the **ADJ** button and hold it down until the green indicator LED lights up.

   Do not touch the adjustment buttons before the conditions have stabilized.

5. To perform the low humidity offset adjustment, remove the filter and insert the probe into a measurement hole of the dry end reference chamber (for example, LiCl: 11 %RH).

   Do not touch the adjustment buttons before the conditions have stabilized. This takes approximately 30 minutes.

6. Using the **-** and **+** buttons, make sure the A_{out} voltage is correct and press the **ADJ** button. The green indicator LED turns off and back on.

7. Insert the probe into the high-end reference chamber (for example, NaCl: 75 %RH chamber in the humidity calibrator HMK15) and perform the high humidity gain adjustment by using the **-** and **+** buttons to make sure the A_{out} voltage is correct. To finish the relative humidity calibration and adjustment, press the **ADJ** button and the red indicator LED lights up.

> If you do not want to perform the temperature adjustment at this time, press the **ADJ** button twice. The indicator LED turns off. After a reset, HMP155 exits the adjustment mode. Otherwise, continue with the next step.

8. Insert the probe into a known reference temperature (if HMK15 humidity calibrator is not used) and let the temperature reading stabilize.

> Do not touch the adjustment buttons before the conditions have stabilized.

9. Using the **-** and **+** buttons, make the temperature offset adjustment by making sure the A_{out} voltage is correct and press the **ADJ** button. Red indicator LED turns off and back.

> If you do not wish to perform the two-point temperature adjustment now, press the **ADJ** button one more time so that the red indicator LED turns off. After reset, HMP155 exits the adjustment mode. Otherwise, continue with the next step.

10. Insert the probe into another reference temperature.

> Do not touch the adjustment buttons before the conditions have stabilized.

11. Using the **-** and **+** buttons, make the temperature gain adjustment by making sure the A_{out} voltage is correct.
12. Press the **ADJ** button one more time so that the red LED turns off to indicate the probe has quit the adjustment mode.

13. After the procedure, tighten the protective cover properly.

    To avoid water leaking in, make sure that there is no gap.

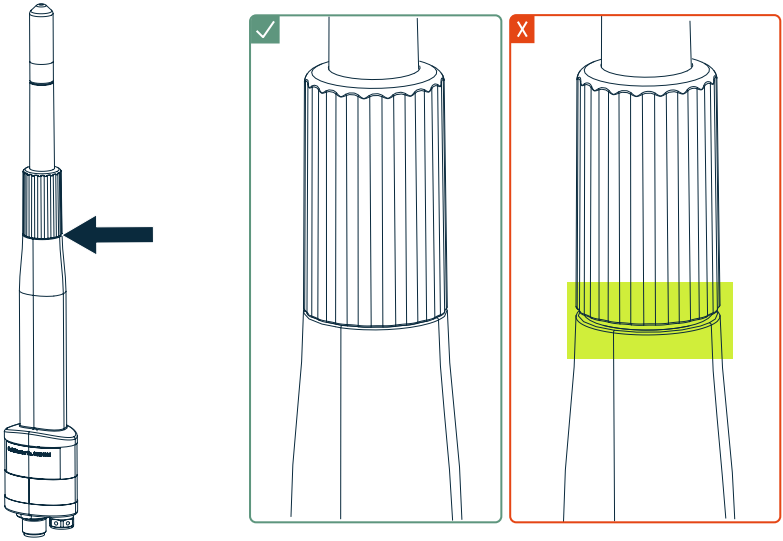

More information

- Chemical purge option (page 14)

6.2.2 Performing one-point humidity and temperature adjustment

1. Carry out chemical purge, if available.
2. Uncover the adjustment buttons on the probe by removing the protective cover and the calibration seal.
3. Open the protective plug.

   There are 3 buttons marked **-**, □, and **+**. There is also a 2-colored indicator LED. See Figure 12 (page 69).
4. Remove the filter and insert the probe into a measurement hole of the salt chamber to do the humidity adjustment.

5. To change HMP155 to the adjustment mode, press the **ADJ** button and hold it down until the green indicator LED lights up.

> Do not touch the adjustment buttons before the conditions have stabilized.

6. Press the **ADJ** button and hold it down until the green indicator LED lights up. This puts HMP155 in the adjustment mode.

> Do not touch the adjustment buttons before the conditions have stabilized.

7. Using the **-** and **+** buttons, make sure the Aout voltage is correct and press the **ADJ** button.

   Green indicator LED turns off and back on.
8. To move on to the temperature adjustment, press the **ADJ** button once and the red indicator LED lights up.
9. Insert the probe into the reference temperature.
10. Using the **-** and **+** buttons, make the temperature offset adjustment by making sure the Aout voltage is correct and press the **ADJ** button.

    Red indicator LED turns off and back on.
11. Press the **ADJ** button one more time so that the red LED turns off to indicate the probe has quit the adjustment mode.

12. After the procedure, tighten the protective cover properly.

    To avoid water leaking in, make sure that there is no gap.

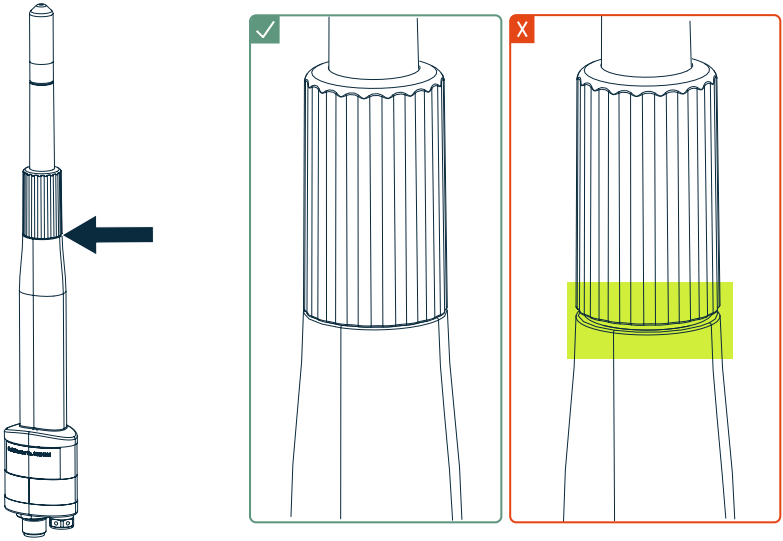

More information

- Chemical purge option (page 14)

6.2.3 Passive output version push-button calibration

If you operate a passive output HMP155, carry out humidity calibration and adjustment like in the active output version. After finishing the humidity adjustment, press the **ADJ** button twice until the LED turns off. To exit the adjustment mode, reset the probe.

6.3 Serial line calibration

6.3.1 Two-point temperature adjustment

In the active output version of HMP155, temperature (T) and additional T-probe temperature (Ta) both can be calibrated and adjusted.

In the passive output version of HMP155, you cannot adjust the temperature.

The difference between the 2 temperature references must be at least 30 °C. The additional temperature sensor is suitable for calibration in liquid bath.

1. Press the HMP155 **ADJ** button to enable the adjustment mode.

   The green LED on the probe lights up. If you use a warmed probe for measuring, probe heating is interrupted when you press **ADJ**.
2. Wait some time for the probe to reach ambient temperature.
3. Type the **CT** command (or **CTA** for the additional T-probe) and press **ENTER**.
4. Press **ENTER** a few times to check if the reading is stabilized. Let the reading stabilize, type the reference temperature after the question mark and press **ENTER** 3 times.

   Example of 2-point adjustment:

```
>ct
T   :  18.6038 1. ref ?
T   :  18.6068 1. ref ?
T   :  18.6098 1. ref ? 19.0
 Press any key when ready ...
T   :  49.5176 2. ref ? 50.0
OK
>
```

5. Move the probe into another reference temperature and let the reading stabilize. Type the reference temperature after the question mark and press **ENTER**.

   OK indicates that the adjustment has succeeded.
6. Type the calibration information (date and text) to the probe memory.

   See commands **CTEXT** and **CDATE**.
7. Reset the probe with the **RESET** command.

More information

- CTEXT command (page 82)
- CDATE command (page 82)

6.3.2 Two-point humidity adjustment

The difference between the 2 humidity references must be at least 30 %RH.

In the active output version of HMP155, you can calibrate and adjust both the temperature (T) and additional T-probe temperature (Ta).

1. Connect HMP155 to a PC.
2. Open a terminal program.
3. Carry out the chemical purge, if available.
   a. To set purge on, type **PUR**.
   b. To reset the probe, type **RESET**.

   Wait for 8 minutes before taking measurements.
4. Press the **ADJ** button.

   The green LED lights up.
5. Remove the filter from the probe and insert the probe into a measurement hole of the dry end reference chamber (for example, LiCl: 11 % RH).
6. Type the **CRH** command and press **ENTER**.
7. Wait at least 30 minutes for the sensor to stabilize.
8. Press **ENTER** a few times to check if the reading has stabilized.
9. When the reading has stabilized, type the reference humidity after the question mark and press **ENTER**.

```
>crh
RH  :  16.6675 1. ref ?
RH  :  16.4978 1. ref ?
RH  :  16.3956 1. ref ? 11.25
 Press any key when ready ...
 RH  :    11.25  Ref2 ?
```

   The device is waiting for the high end reference.
10. Insert the probe into the measurement hole of the high-end reference chamber (for example, NaCl: 75 %RH chamber in the humidity calibrator HMK15). Press any key when ready.
11. Let the probe stabilize for about 30 minutes.

    You can follow the stabilization by pressing **ENTER**.

12. When stabilized, type the high end reference value after the question mark and press **ENTER**.

```
RH  :    75.45  Ref2 ?
RH  :    75.57  Ref2 ?
RH  :    75.55  Ref2 ?
RH  :    75.59  Ref2 ? 75.5
OK
```

    OK indicates that the adjustment has succeeded and the new calibration coefficients are calculated and stored.

13. Type the calibration information (date and text) to the memory of the probe.
14. Reset the probe with the **RESET** command.
15. Take the probe out of the reference conditions and replace the filter, if needed.

More information

- Serial line communication (page 36)
- Chemical purge option (page 14)
- CTEXT command (page 82)
- CDATE command (page 82)

6.3.3 One-point humidity and temperature adjustment

You can do one-point humidity and temperature adjustment with the following serial line commands:

- For humidity adjustment: **CRH**
- For temperature adjustment: **CT** and **CTA**

To make an adjustment, type the command, press SPACE, and type the reference value.

Example

```
Crh 20.0
OK
```

6.3.4 Adjusting and calibrating relative humidity after sensor change

After sensor change, you must calibrate and adjust the relative humidity.

1. Connect HMP155 to a computer.
2. Open a terminal program.
3. Carry out chemical purge, if available.

4. Press the **ADJ** button. The green LED lights up.
5. Remove the filter from the probe and insert the probe into a measurement hole of the dry end reference chamber (for example, LiCl: 11 % RH).
6. Type the **FCRH** command and press **ENTER**.

> When you type the **fcrh** command, the RH readings are indicative. They enable you to check the stability of the readings. The readings are based on the parameters of the old relative humidity sensor. In some extreme cases, the RH reading can be negative or extremely high. After the adjustment, the actual RH readings are correct.

7. Wait at least 30 minutes for the sensor to stabilize.
8. Press **ENTER** a few times to check if the reading has stabilized.
9. When the reading has stabilized, give the reference humidity after the question mark and press **ENTER**.

```
>fcrh
RH : 25.19 Ref1 ? 11.3
Press any key when ready ...
RH : 70.02 Ref2 ? 75.5
OK
>
```

The device is waiting for the high end reference.

10. Insert the probe into the measurement hole of the high end reference chamber (for example, NaCl: 75 % RH chamber in the humidity calibrator HMK15) and press any key.
11. Let the probe stabilize for about 30 minutes. You can follow the stabilization by pressing **ENTER**.
12. When stabilized, type the high end reference value after the question mark and press **ENTER**.

```
RH  :    75.45  Ref2 ?
RH  :    75.57  Ref2 ?
RH  :    75.55  Ref2 ?
RH  :    75.59  Ref2 ? 75.5
OK
```

`OK` indicates that the adjustment has succeeded and the new calibration coefficients are calculated and stored.

13. Type the calibration information, date and text, to the memory of the probe.

More information

- Serial line communication (page 36)
- Chemical purge option (page 14)
- CTEXT command (page 82)
- CDATE command (page 82)

6.4 User adjustment commands

You can use the **L** and **LI** commands to display adjustment parameters. You can use the **L** command in normal mode but you can only use the **LI** command in the adjustment mode.

You can update the parameters with the commands **CRH**, **CT**, and **CTA**. Use **FCRH** only when you change the sensor.

More information

- CTA command (page 81)
- CT command (page 80)
- CRH command (page 81)
- FCRH command (page 82)
- L command (page 79)
- LI command (page 79)

6.4.1 L command

Use the **L** command to display user adjustment parameters.

Example

```
>l
Cp offset :   0.00000000E+00
Cp gain   :   1.00000000E+00
T  offset :   0.00000000E+00
T  gain   :   1.00000000E+00
Ta offset :   0.00000000E+00
Ta gain   :   1.00000000E+00
>
```

6.4.2 LI command

Use the **LI** command to display and ask for new values for the user adjustment parameters.

If you suspect that something has gone wrong with the calibration and adjustment, use the **LI** command to return the factory values by entering the values shown in the following example.

Example

```
>li
Cp offset :   0.00000000E+00 ?
Cp gain   :   1.00000000E+00 ?
T  offset :   0.00000000E+00 ?
T  gain   :   1.00000000E+00 ?
Ta offset :   0.00000000E+00 ?
Ta gain   :   1.00000000E+00 ?
>
```

6.4.3 CT command

Use the **CT** command for one-point or two-point serial line temperature calibration and adjustment of the T sensor. The **CT** command changes the user adjustment parameters of temperature sensor T.

You can use the **CT** command only in the adjustment mode.

Example of two-point adjustment:

```
>ct
T : 18.6038 1. ref ?
T : 18.6068 1. ref ?
T : 18.6098 1. ref ? 19.0
Press any key when ready ...
T : 49.5176 2. ref ?
T : 49.5176 2. ref ?
T : 49.5176 2. ref ? 50.0
OK
>
```

`OK` indicates that the adjustment has been successful.

More information

- L command (page 79)
- LI command (page 79)

6.4.4 CTA command

Use the **CTA** command for two-point serial line temperature calibration and adjustment of the additional temperature probe (Ta). **CTA** changes the user adjustment parameters of the additional temperature probe.

CTA command can only be used in adjustment mode.

Example of 2-point adjustment:

```
>cta
 TA  :   10.21  Ref1 ?
 TA  :   10.21  Ref1 ?
 TA  :   10.19  Ref1 ? 10.5
 Press any key when ready ...
 TA  :   50.19  Ref2 ?
 TA  :   50.20  Ref2 ?
 TA  :   50.19  Ref2 ?
 TA  :   50.19  Ref2 ? 50.3
OK
>
```

`OK` indicates that the adjustment has been successful.

More information

- L command (page 79)
- LI command (page 79)

6.4.5 CRH command

Use the **CRH** command for one-point or two-point serial line relative humidity calibration and adjustment. **CRH** changes the user adjustment parameters of relative humidity.

The **CRH** command can only be used in the adjustment mode.

Example of two-point adjustment:

```
 >crh
RH : 16.6675 1. ref ?
RH : 16.4978 1. ref ?
RH : 16.3956 1. ref ? 11.25
Press any key when ready ...
RH : 11.25 Ref2 ?
RH : 75.45 Ref2 ?
RH : 75.57 Ref2 ?
RH : 75.55 Ref2 ?
RH : 75.59 Ref2 ? 75.5
OK
```

`OK` indicates that the adjustment has succeeded and the new calibration coefficients are calculated and stored.

More information

- L command (page 79)
- LI command (page 79)

6.4.6 FCRH command

Use the **FCRH** command for relative humidity calibration after a sensor change.

```
>fcrh
 RH :    25.19  Ref1 ? 11.3
 Press any key when ready ...
 RH :    70.02  Ref2 ? 75.5
OK
>
```

OK indicates that the adjustment has been successful.

6.5 Typing calibration information

In the adjustment mode, you can only use the **CTEXT** and **CDATE** commands. To change to the adjustment mode, hold down the **ADJ** button until the green LED lights up.

More information

- CTEXT command (page 82)
- CDATE command (page 82)

6.5.1 CTEXT command

Use the **CTEXT** command to enter text to the calibration information field.

Example

```
>ctext
 info    :  / FIN ?
>
```

6.5.2 CDATE command

Use the **CDATE** command to enter a date to calibration information field. Set the calibration date in format YYYYMMDD.

Example

```
>cdate 20080320
>
```

6.6 Analog output adjustment

When adjusting the analog output the analog output is forced to the following values:

Voltage output: 10 % and 90 % of the range

To measure voltage, connect HMP155 to a calibrated voltage meter.

To change HMP155 to the adjustment mode, hold down the **ADJ** button until a green LED lights up.

You cannot use the serial line command **ACAL** with HMP155 passive output version.

Type the **ACAL** command and type the multimeter reading for each case. Continue by pressing **ENTER**. When a channel is specified, only the specified analog output channel is adjusted.

6.6.1 ACAL command

Use the **ACAL** command for analog calibration and adjustment.

Example

```
Ch 0:
>acal 0
U1 ( V  ) ? 1.001
U2 ( V  ) ? 9.011

Ch 1:
>acal 1
U1 ( V  ) ? 2.0988
U2 ( V  ) ? 8.8997
>
```

6.7 Calibrating and adjusting with MI70

Vaisala MI70 measurement indicator is an accessory that you can use as a display or as a communication device for HMP155. When you use MI70, HMP155 is powered through it.

You can calibrate HMP155 easily on site with MI70. You can calibrate both the active output version and the passive output version.

- In the active output version, you can calibrate and adjust relative humidity, temperature, and additional T-probe temperature.
- In the passive output version, you can only calibrate and adjust relative humidity.

1. Connect HMP155 to MI70 with the connection cable (221801).
2. Switch on MI70 by pressing the power key and follow the instructions on the display.

> If you have the passive output version, always hold down the **ADJ** button when you switch HMP155 on.

3. Activate the adjustment mode by holding down the **ADJ** button on the probe until the message below appears on the MI70 display.

4. Select **OK** to move on to the adjustment and select the quantity you want to adjust.

   The list of quantities varies depending on the configuration of your HMP155.

5. To finish the adjustment, follow the onscreen instructions.

7. Technical data

7.1 HMP155 specifications

Table 30 Humidity measurement performance

Property	Description/value
Sensor	HUMICAP®R2, 180R and INTERCAP for typical applications HUMICAP®R2C, 180RC, and INTERCAPC for applications with chemical purge and/or warmed probe
Observation range	0–100 %RH
Response time at +20 °C (+68 °F) in still air with sintered Teflon filter	63 %: 20 s 90 %: 60 s
Factory calibration uncertainty at +20 °C (+68 °F)[1)]	±0.6 %RH (0–40 %RH) ±1.0 %RH (40–95 %RH)
Accuracy (including non-linearity, hysteresis, and repeatability)	
At +15 ... +25 °C (+59 ... +77 °F)	±1 %RH (0–90 %RH) ±1.7 %RH (90–100 %RH)
At −20 ... +40 °C (−4 ... +104 °F)	±(1.0 + 0.008 × reading) %RH
At −40 ... −20 °C (−40 ... −4 °F)	±(1.2 + 0.012 × reading) %RH
At +40 ... +60 °C (+104 ... +140 °F)	±(1.2 + 0.012 × reading) %RH
At −60 ... −40 °C (−76 ... −40 °F)	±(1.4 + 0.032 × reading) %RH

1) *Defined as ±2 standard deviation limits. Small variations possible (see also the calibration certificate).*

Table 31 Temperature measurement performance

Description	Value
Sensor	Pt100 RTD element, Class F 0.1 IEC 60751
Observation range	−80 ... +60 °C (−112 ... +140 °F)
Response time for additional temperature probe in 3 m/s (7 mph) air flow	63 %: < 20 s 90 %: < 35 s
Accuracy with voltage output	
At −80 ... +20 °C (−112 ... +68 °F)	±(0.226 − 0.0028 × temperature) °C

Description	Value
At +20 ... +60 °C (+68 ... +140 °F)	±(0.055 + 0.0057 × temperature) °C
Accuracy with passive (resistive) output	
According to Tolerance Class AA IEC 60751 [1)]	±(0.1 + 0.0017 × |temperature|) °C
Accuracy with RS-485 output	
At −80 ... +20 °C (−112 ... +68 °F)	±(0.176 − 0.0028 × temperature) °C
At +20 ... +60 °C (+68 ... +140 °F)	±(0.07 + 0.0025 × temperature) °C

1) Tolerance Class AA IEC 60751 corresponds to IEC 751 1/3 Class B.

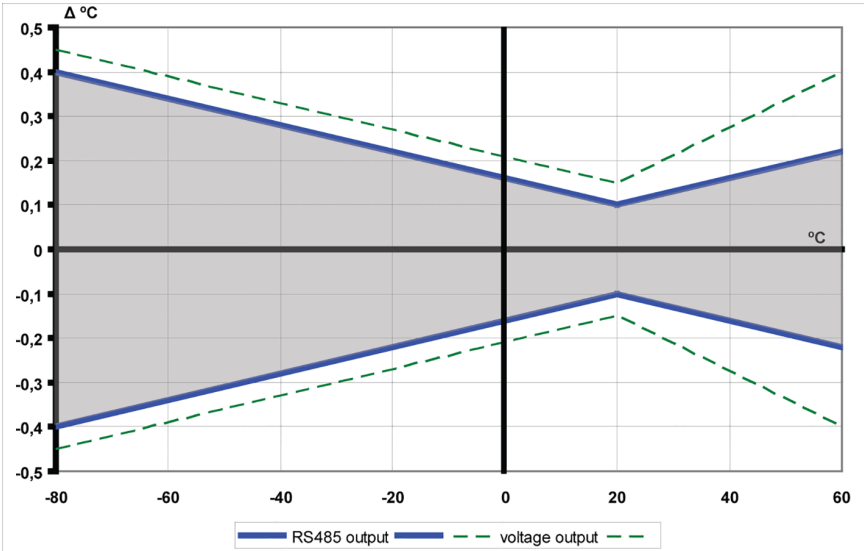

Figure 13 HMP155 accuracy over temperature range: voltage and RS-485

Table 32 Dew point calculation specifications

Property	Description/value
Accuracy at −20 ... +40 °C (−4 ... +104 °F)	±0.6 at 90–100 %RH

Table 33 Quantities measured by HMP155

Quantity	Abbreviation	Metric unit	Imperial unit
Relative humidity	RH	%RH	%RH

Quantity	Abbreviation	Metric unit	Imperial unit
Temperature	T	°C	°F
Additional T-probe temperature	Ta	°C	°F

The calculated quantities are not available in the passive output version.

Table 34 Quantities calculated from measured quantities

Quantity	Abbreviation	Metric unit	Imperial unit
Dew point / Frost point temperature (Td/f)	TDF	°C	°F
Dew point temperature (Td)	TD	°C	°F
Mixing ratio (x)	X	g/kg	gr/lb
Wet bulb temperature (Tw)	TW	°C	°F

Table 35 Operating environment

Property	Description/value
Operating temperature for humidity measurement	−80 ... +60 °C (−112 ... +140 °F)
Storage temperature	−80 ... +60 °C (−112 ... +140 °F)
Operating humidity	0–100 %RH
IP rating	IP66: Dust-tight. Protected from powerful water jets from any direction.

Table 36 Inputs and outputs

Property	Description/value
Operating voltage	7–28 V DC
Minimum operating voltage	0–1 V output or RS-485: 7 V 0–5 V output, or warmed probe: 12 V 0–10 V output, chemical purge, or XHEAT: 16 V
Outputs	Voltage output: 0–1 V, 0–5 V, 0–10 V Resistive Pt100 4-wire connection RS-485

Property	Description/value
Average power consumption (+15 V DC, load 100 kΩ)	0–1 V output: < 3 mA 0–10 V output: +0.5 mA RS-485: < 4 mA During chemical purge: Maximum 110 mA With warmed probe: Maximum 150 mA
Settling time at startup	Voltage output: 2 s RS-485: 3 s

Table 37 Mechanical specifications

Property	Description/value
Dimensions (H × W)	279 × 40 mm (10.9 × 1.6 in)
Weight	93 g (3.25 oz)
Materials	
Filter	Sintered Teflon or membrane
Housing	Polycarbonate (PC)
Additional temperature probe	Stainless steel AISI 316L

Table 38 Compliance

Property	Description/value
EU directives and regulations	EMC Directive (2014/30/EU) RoHS Directive (2011/65/EU) as amended by 2015/863
Electromagnetic compatibility (EMC)	EN 61326-1, Electrical equipment for measurement, control and laboratory use - EMC requirements; industrial environment CISPR 32 / EN 55032, Class B
RoHS	EN IEC 63000:2018
Application standards	EN 15518-3:2023, Winter maintenance equipment - Road weather information systems - Part 3: Requirements on measured values of stationary equipment

7.2 Accuracy of calculated variables

The accuracy of the calculated variables depend on the calibration accuracy of the humidity and temperature sensors. Here the accuracies are given for ± 2 %RH and ± 0.2 °C.

7.2.1 Accuracy of dew point measurement

Find the intersection of the dew point temperature curve and the dew point difference reading (process temperature-dew point temperature) on the x-axis and read the accuracy in dew point measurement on the y-axis.

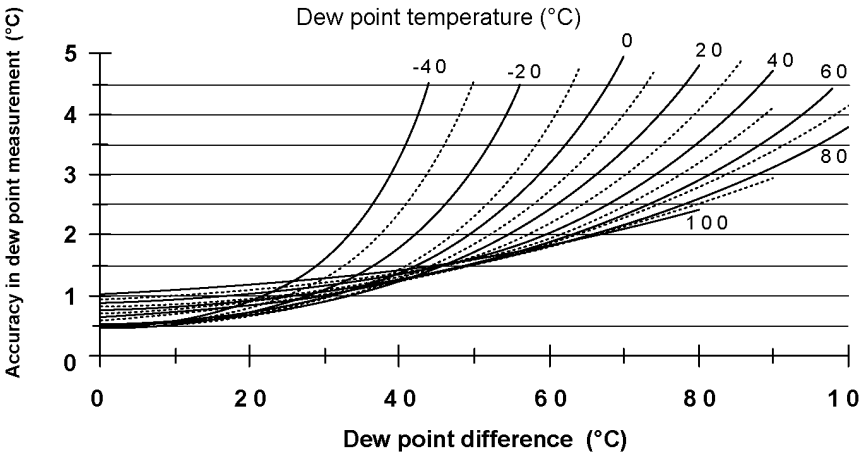

Figure 14 Accuracy of dew point measurement

7.2.2 Accuracy of dew point temperature °C

Temperature	Relative humidity									
	10	20	30	40	50	60	70	80	90	100
−40	1.86	1.03	0.76	0.63	0.55	0.50	0.46	0.43	—	—
−20	2.18	1.19	0.88	0.72	0.62	0.56	0.51	0.48	—	—
0	2.51	1.37	1.00	0.81	0.70	0.63	0.57	0.53	0.50	0.48
20	2.87	1.56	1.13	0.92	0.79	0.70	0.64	0.59	0.55	0.53
40	3.24	1.76	1.27	1.03	0.88	0.78	0.71	0.65	0.61	0.58
60	3.60	1.96	1.42	1.14	0.97	0.86	0.78	0.72	0.67	0.64

7.2.3 Accuracy of mixing ratio g/kg (ambient pressure 1013 mbar)

Temperature	Relative humidity									
	10	20	30	40	50	60	70	80	90	100
−40	0.003	0.003	0.003	0.003	0.003	0.004	0.004	0.004	—	—
−20	0.017	0.018	0.019	0.021	0.022	0.023	0.025	0.026	—	—
0	0.08	0.09	0.09	0.10	0.10	0.11	0.11	0.12	0.13	0.13
20	0.31	0.33	0.35	0.37	0.39	0.41	0.43	0.45	0.47	0.49
40	0.97	1.03	1.10	1.17	1.24	1.31	1.38	1.46	1.54	1.62
60	2.68	2.91	3.16	3.43	3.72	4.04	4.38	4.75	5.15	5.58

7.2.4 Accuracy of wet bulb temperature °C

Temperature	Relative humidity									
	10	20	30	40	50	60	70	80	90	100
−40	0.20	0.20	0.20	0.20	0.20	0.20	0.20	0.20	—	—
−20	0.21	0.21	0.22	0.22	0.22	0.22	0.23	0.23	—	—
0	0.27	0.28	0.28	0.29	0.29	0.29	0.30	0.30	0.31	0.31
20	0.45	0.45	0.45	0.44	0.44	0.44	0.43	0.43	0.42	0.42
40	0.84	0.77	0.72	0.67	0.64	0.61	0.58	0.56	0.54	0.52
60	1.45	1.20	1.03	0.91	0.83	0.76	0.71	0.67	0.63	0.60

7.3 Options, accessories, and spare parts

HMP155 order form is available at HMP155 Order Form.

Table 39 Sensors

Description	Item code
INTERCAP general purpose sensor (1 piece)	15778HM
HUMICAP180R general purpose sensor (1 piece)	HUMICAP180R
HUMICAPR2 general purpose sensor (1 piece)	HUMICAPR2
HUMICAPR2 general purpose sensor (10 pieces)	HUMICAPR2-10PCS

Description	Item code
HUMICAP180RC composite sensor (1 piece)	HUMICAP180RC

Table 40 Radiation shields

Description	Item code
Large radiation shield for best performance (suitable for HMP155 with or without additional T-probe). Mounting on horizontal 40 x 40 mm beam.	DTR13
Large radiation shield with mounting arm for installation on Ø 60, Ø 75, and Ø 100 mm vertical poles. Wall mounting with mounting arm.	DTR13P44H
Compact radiation shield (suitable for HMP155 without additional T-probe). Mounting on horizontal 40 x 40 mm beam.	DTR503
Compact radiation shield with mounting arm for installation on Ø 104 or Ø 60 mm vertical poles. Wall mounting with mounting arm.	DTR503A

Table 41 Probe mounting accessories

Description	Item code
T-probe installation adapter for DTR13	221069
T-probe installation adapter for DTR502	221072
T-probe installation adapter for Stevenson screen	221321

Table 42 Connection cables

Description	Item code
Powering USB cable for service	221040
MI70 connection cable	221801
Connection cable 0.8 8-pin M12	272226
Connection cable 3.5 m 8-pin M12	220496
Connection cable 5 m 8-pin M12	223283
Connection cable 10 m 8-pin M12	220497
Connection cable 30 m 8-pin M12	220498

Description	Item code
Connection cable 100 m	279350

Table 43 Filters

Description	Item code
Sintered Teflon filter and O-ring	219452SP
Membrane filter	230727SP

Table 44 Calibration accessories

Description	Item code
MI70 measurement indicator	MI70
MI70 connection cable	221801
HMK15 humidity calibrator (saturated salt solutions)	HMK15
HMK15 adapter fitting for 12-mm probes	218377SP

Table 45 Other

Description	Item code
Protection set for calibration buttons: protective cover, 2 O-rings and protective plug	221318
Connection cover for enhanced protection	DRW236638

7.4 Dimensions

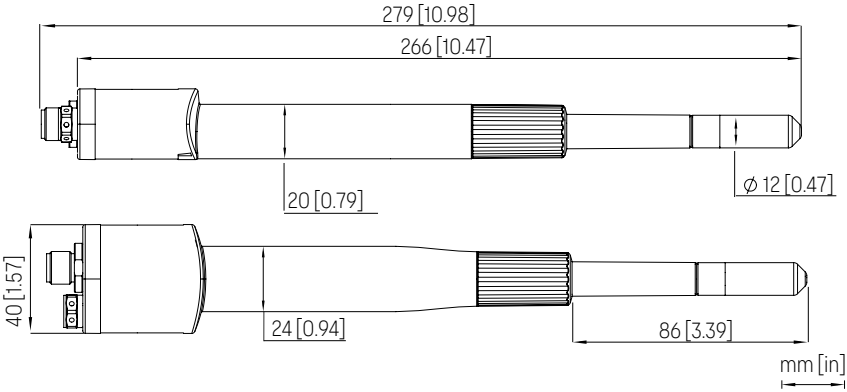

Figure 15 Dimensions

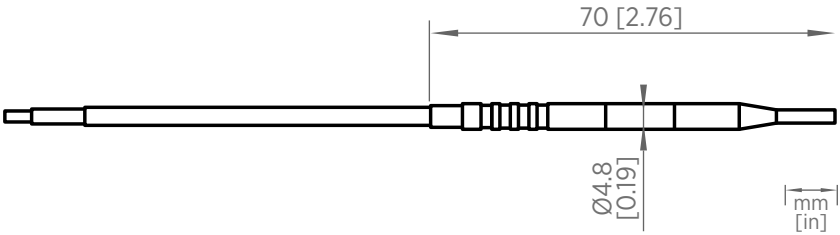

Figure 16 Additional T-probe dimensions

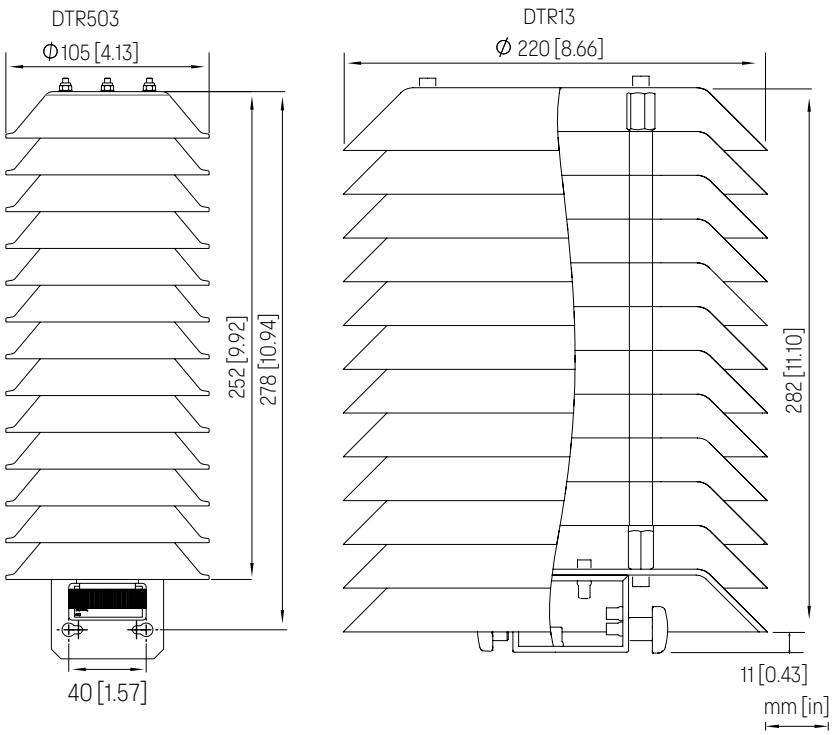

Figure 17 DTR503 and DTR13 dimensions

Appendix A. Calculation formulas

HMP155 measures relative humidity and temperature. The following equations are used for calculating dew point and frost point, mixing ratio, wet bulb temperature, absolute humidity, and enthalpy in normal pressure.

Dew point / frost point (1)

$$T_{d/f} = \frac{237.3}{\left(\frac{7.5}{10_{\log}\left(\frac{P_w}{6.1078}\right)} - 1\right)} + 273.15$$

Parameter	Description
P_w	Water vapor pressure. Dew point/frost point is measured in Kelvin.

Mixing ratio (2)

$$x = 621.99 \times \frac{P_w}{p - P_w}$$

Absolute humidity (3)

$$A = C \cdot \frac{P_w}{T}$$

Parameter	Description
C	216.679

Enthalpy (4)

$$h = T \cdot (1.01 + 0.00189 \cdot x) + 2.5 \cdot x$$

The water vapor saturation pressure at temperature T_{pws} is calculated over water and over ice by using 4 equations (5-8). These formulas are taken from Hyland, R.,Wexler, A.: *Formulations of the Thermodynamic Properties of the Saturated Phases of H2O from 173.15 K to 473.15 K*, Ashrae transactions 1983, Part 2A. pp. 500-513.

PWS over water (5)

$$\Theta = T - \sum_{i=0}^{3} C_i T_{pws}{}^{i}$$

PWS over ice (6)

$$\Theta = T_{pws}$$

Parameter	Description
T_{pws}	Temperature in K
C_0	0.4931358
C_1	$-0.46094296 * 10^{-2}$
C_2	$0.13746454 * 10^{-4}$
C_3	$-0.12743214 * 10^{-7}$

Over water (7)

$$100\ x \ln P_{wsWATER} = \frac{b_{-1}}{\Theta} + \sum_{b=0}^{3} b_i \Theta^i + b_4 \ln \Theta$$

Parameter	Description
b_{-1}	$-0.58002206 * 10^{4}$
b_0	$0.13914993 * 10^{1}$
b_1	$-0.48640239 * 10^{-1}$
b_2	$0.41764768 * 10^{-4}$
b_3	$-0.14452093 * 10^{-7}$
b_4	6.5459673

Over ice (8)

$$100\ x \ln P_{wsICE} = \frac{a_{-1}}{\Theta} + \sum_{b=0}^{4} a_i \Theta^i + a_6 \ln \Theta$$

Parameter	Description
b_i	Coefficients over water
a_{-1}	$-0.56745359 * 10^4$
a_0	$0.63925247 * 10^1$
a_1	$-0.96778430 * 10^{-2}$
a_2	$0.62215701 * 10^{-6}$
a_3	$0.20747825 * 10^{-8}$
a_4	$-0.94840240 * 10^{-12}$
a_6	$0.41635019 * 10^1$

The water vapor pressure (9)

$$P_w = RHx\frac{P_{ws}}{100}$$

Parts per million by volume (10)

$$ppm_v = 10^6 x\frac{P_w}{(p - P_w)}$$

Parameter	Description
T_d	Dew point temperature (°C)
P_w	Water vapor pressure (hPa)
P_{ws}	Water vapor saturation pressure (hPa)
RH	Relative humidity (%)
x	Mixing ratio (g/kg)
p	Atmospheric pressure (hPa)
A	Absolute humidity (g/m3)
T	Temperature (K)
h	Enthalpy (kJ/kg)
Θ	Virtual temperature

Technical support

You can contact Vaisala technical support at helpdesk@vaisala.com. Provide the following supporting information as applicable:

- Product name, model, and serial number
- Software/Firmware version
- Name and location of the installation site
- Name and contact information of a technical person who can provide further information

When contacting technical support for troubleshooting, also provide the following information as applicable:

- What failed (what worked / did not work)?
- Where did it fail (location and environment)?
- When did it fail (date, immediately / after a while / periodically / randomly)?
- How many failed (only one defect / other same or similar defects / several failures in one unit)?
- What was done when the failure was noticed?
- What was connected to the product and to which connectors?
- What is the input power source type, voltage, and what else (such as lighting, heaters, and motors) was connected to the same power output?
- Are all parts connected and grounded properly? Take a photo to help the troubleshooting.

If available, provide the diagnostics package for the application.

Warranty

For warranty terms and conditions and the warranty claim process, see vaisala.com/warranty. Note that warranty coverage may not apply if the product is damaged due to normal wear and tear, exceptional operating conditions, negligent handling or installation, or unauthorized modifications. See the applicable supply contract or Conditions of Sale for details of the warranty for each product.

Product returns

If the product is faulty, these steps help to speed up the return process and avoid extra costs.

1. Read the warranty information.
2. Contact Vaisala technical support and request a Return Material Authorization (RMA) and shipping instructions.

Always request the RMA before returning any faulty material.
Provide the failure report as requested.

Recycling

Recycle all applicable material according to local regulations.

VAISALA

vaisala.com

AKRIBIS · www.akribis.info · contacto@akribis.info