USER GUIDE

HMP1

Vaisala · Authorized Partner

Distributed by AKRIBIS

M212022EN-M

User Guide

Vaisala Indigo-compatible humidity and temperature probes

HMP Series with MMP8 and TMP1

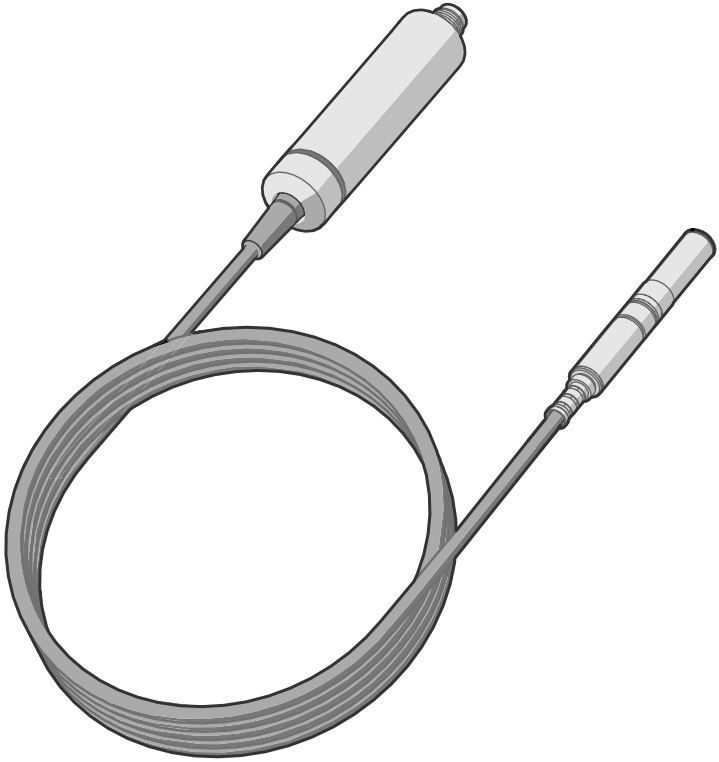

VAISALA

AKRIBIS · www.akribis.info · contacto@akribis.info

PUBLISHED BY

Vaisala Oyj
Vanha Nurmijärventie 21, FI-01670 Vantaa, Finland
P.O. Box 26, FI-00421 Helsinki, Finland
+358 9 8949 1
vaisala.com
docs.vaisala.com

© Vaisala 2025

No part of this document may be reproduced, published, or publicly displayed in any form or by any means, electronic or mechanical (including photocopying), nor may its contents be modified, translated, adapted, sold, or disclosed to a third party without prior written permission of the copyright holder. Translated document and translated portions of the document are based on the original English version. Parts of the translation may have been created using machine-assisted translation. In ambiguous cases, the English version is applicable, not the translation.

The contents of this document are subject to change without prior notice.

Local rules and regulations applicable to the products and services may vary, and they shall take precedence over the information contained in this document. Vaisala makes no representations on this document's compliance with the local rules and regulations applicable at any given time, and hereby disclaims any and all responsibilities related thereto. You are instructed to confirm the applicability of the local rules and regulations and their effect on the intended use of the products and services.

This document does not create any legally binding obligations for Vaisala towards customers or end users. All legally binding obligations are set forth exclusively in the applicable contract or in the relevant set of General Conditions of Vaisala (vaisala.com/policies).

This product contains software developed by Vaisala or third parties. Use of the software is governed by license terms and conditions included in the applicable contract or, in the absence of separate license terms and conditions, by the General License Conditions of Vaisala Group.

Table of contents

1. About this document ... 11
1.1 Version information ... 11
1.2 Related manuals ... 13
1.3 Documentation conventions ... 14
1.4 Trademarks ... 14

2. Product overview ... 15
2.1 Probe structure ... 15
2.2 Basic features and options ... 16
2.3 Output parameters ... 16
2.4 Additional features with Indigo transmitters ... 17
2.5 Safety ... 18
2.6 ESD protection ... 18
2.7 Regulatory statements ... 19
2.7.1 FCC Part 15 compliance statement ... 19
2.7.2 Canada ICES-3 / NMB-3 compliance statement ... 19

3. Functional description ... 20
3.1 HUMICAP technology ... 20
3.2 Sensor purge ... 20
3.3 Condensation prevention functions ... 21
3.4 Environmental compensation ... 22
3.4.1 Pressure compensation ... 22
3.4.2 Temperature compensation ... 22
3.5 Filtering factor ... 23

4. Installation ... 25
4.1 Probe holder ASM213582 ... 26
4.1.1 Mounting the probe body using probe holder ASM213582 ... 26
4.2 Wiring ... 27
4.3 HMP1 probe ... 28
4.4 HMP3 probe ... 29
4.4.1 Vapor-tight installations with cable gland ... 30
4.4.2 Duct installation kit for humidity probe ... 30
4.4.3 Probe holder ASM213382 ... 30
4.5 HMP4 probe ... 31
4.6 HMP5 probe ... 32
4.7 HMP7 probe ... 33
4.7.1 Example installation of a heated probe head ... 35
4.7.2 Vapor-tight installations with cable gland ... 35
4.7.3 Duct installation kit for humidity probe ... 36
4.7.4 Pressure-tight Swagelok installation kit ... 36
4.8 HMP8 probe ... 37
4.8.1 Tightening the clasp nut ... 39

4.9 HMP9 probe....40
4.9.1 Installing HMP9 through a cable gland....41
4.9.2 Overview of HMP9 Duct Installation Kit....42
4.9.3 Mounting HMP9 probe head with Duct Installation Kit....43
4.10 MMP8 probe....45
4.10.1 Moisture ppm calculation for transformer oils....46
4.11 TMP1 probe....47
4.11.1 Duct installation kit for temperature probe....48
4.11.2 Pressure-tight Swagelok installation kit....48
4.12 DTR502B solar radiation shield....49
4.12.1 Mounting probe head inside DTR502B....50
4.13 Configuring environmental compensations....52

5. Configuration with Insight software....54
5.1 Vaisala Insight software....54
5.2 Connecting to Insight software....54
5.3 Configuration options....55
5.4 Configuring condensation prevention with Insight....55
5.5 Diagnostics in Insight....56

6. Using probe with Indigo transmitters....58
6.1 Connecting probe to Indigo200 series transmitters....58
6.2 Connecting probe to Indigo300 transmitter....59
6.3 Connecting probes to Indigo500 series transmitters....60
6.4 Default analog output configuration with Indigo transmitters....61

7. Using probe with Indigo80 handheld indicator....63
7.1 Indigo80 handheld indicator....63
7.1.1 Probe compatibility....64
7.1.2 Indigo80 keypad....64
7.1.3 Indigo80 main menu....64
7.2 Connecting probes to Indigo80....65
7.3 Configuring probe features with Indigo80 handheld indicator....67
7.3.1 Example of configuring filtering factor with Indigo80 handheld indicator....67
7.4 Configuring environment settings with Indigo80 handheld indicator....68
7.4.1 Example of enabling temperature compensation with Indigo80 handheld indicator (HMP7 and TMP1)....70

8. Calibration and adjustment....72
8.1 Calibration and adjustment overview....72
8.2 Adjustment points and requirements....72
8.3 HMK15 Humidity Calibrator with HMP Series probes....73
8.4 Adjusting measurement with Insight software....75
8.5 Adjusting measurement with Indigo transmitter....76

8.6 Calibration and adjustment with Indigo80 handheld indicator.....77
8.6.1 Performing guided calibration with Indigo80 handheld indicator....78
8.6.2 Performing manual adjustment with Indigo80 handheld indicator using previously measured values.....79
8.6.3 Restoring factory adjustment with Indigo80 handheld indicator.....81

9. Maintenance.....83
9.1 Cleaning the HMP and TMP probes.....83
9.2 Cleaning the MMP8 probe.....83
9.3 Chemical tolerance.....84
9.4 Changing the probe filter.....84
9.5 Replacing the HUMICAP® sensor.....85

10. Troubleshooting.....88
10.1 Problem situations.....88
10.2 Error messages.....89
10.3 Restoring factory default settings with Insight software.....91
10.4 Restoring factory default settings with Indigo80 handheld indicator.....91

11. Technical data.....93
11.1 HMP1 specifications.....93
11.2 HMP3 specifications.....96
11.3 HMP4 specifications.....100
11.4 HMP5 specifications.....104
11.5 HMP7 specifications.....108
11.6 HMP8 specifications.....112
11.7 HMP9 specifications.....117
11.8 MMP8 specifications.....121
11.9 TMP1 specifications.....124
11.10 Accessories and spare parts.....127
11.11 Accuracy of calculated output parameters.....132

Appendix A: Modbus reference.....134
A.1 Default communication settings.....134
A.2 Function codes.....134
A.3 Data encoding.....134
A.3.1 32-bit floating point or 32-bit integer format.....135
A.3.2 16-bit integer format.....135
A.4 Modbus registers.....135
A.4.1 Measurement data registers.....136
A.4.2 Configuration registers.....138
A.4.3 Status registers.....141
A.4.4 Test value registers.....143
A.5 Device identification objects.....143
A.6 Exception responses.....144
A.7 Modbus communication examples.....145

Maintenance and calibration services.....149

Warranty.....149

Technical support.....149

Recycling.....149

List of figures

Figure 1 Probe parts....15
Figure 2 Example installation....25
Figure 3 Probe holder ASM213582 dimensions....26
Figure 4 M12 5-pin A-coded male connector pinout....27
Figure 5 RS-485 wiring....28
Figure 6 HMP1 probe dimensions....28
Figure 7 HMP3 probe dimensions....29
Figure 8 Probe holder ASM213382....30
Figure 9 HMP4 probe dimensions....31
Figure 10 HMP5 probe dimensions....32
Figure 11 Optional mounting flange 210696 dimensions....32
Figure 12 HMP7 probe dimensions....33
Figure 13 Heated probe and temperature probe installation in a climate chamber....35
Figure 14 HMP7 installation to pipeline using a Swagelok installation kit....36
Figure 15 HMP8 probe dimensions....37
Figure 16 HMP8 probe head....38
Figure 17 Sealing of fitting body into process....38
Figure 18 HMP9 probe dimensions....40
Figure 19 Installing HMP9 probe head through a cable gland....41
Figure 20 Duct Installation Kit ASM214055 dimensions....42
Figure 21 Duct installation overview....43
Figure 22 MMP8 dimensions....45
Figure 23 TMP1 probe dimensions....47
Figure 24 Optional duct kit 215003 dimensions....48
Figure 25 TMP1 installation to pipeline using a Swagelok installation kit....49
Figure 26 DTR502B dimensions....50
Figure 27 Mounting DTR502B on a pole mast....51
Figure 28 HMP9 probe head with sensor head support 215130....52
Figure 29 Connecting probe to Insight using Indigo USB adapter....54
Figure 30 HMP5 in Insight software....55
Figure 31 HMP5 diagnostics in Insight (advanced mode)....57
Figure 32 Connecting probe to Indigo200 series transmitter....59
Figure 33 Connecting probe to Indigo300 transmitter....60
Figure 34 Connecting probes to Indigo500 transmitter....61
Figure 35 Indigo80 handheld indicator....63
Figure 36 Indigo80 keypad....64
Figure 37 Indigo80 main menu....64
Figure 38 Example of connecting probes to Indigo80....65
Figure 39 HMP5 calibration with HMK15 using 211302SP adapter....73
Figure 40 Using HMP9 calibration adapter with HMK15....74
Figure 41 Indigo80 calibration methods for probes....78
Figure 42 Example: HMP3 probe head with filter removed....86
Figure 43 HMP1 humidity measurement accuracy as a function of temperature....94

Figure 44 HMP1 temperature measurement accuracy over full range.....94
Figure 45 HMP1 probe dimensions.....96
Figure 46 HMP3 humidity measurement accuracy as a function of temperature.....97
Figure 47 HMP3 temperature measurement accuracy over full range..... 97
Figure 48 HMP3 probe dimensions.....100
Figure 49 HMP4 humidity measurement accuracy as a function of temperature.....101
Figure 50 HMP4 temperature measurement accuracy over full range..... 101
Figure 51 HMP4 probe dimensions.....104
Figure 52 HMP5 humidity measurement accuracy as a function of temperature.....105
Figure 53 HMP5 temperature measurement accuracy over full range.....105
Figure 54 HMP5 probe dimensions.....108
Figure 55 HMP7 humidity measurement accuracy as a function of temperature.....109
Figure 56 HMP7 temperature measurement accuracy over full range.....110
Figure 57 HMP7 probe dimensions.....112
Figure 58 HMP8 humidity measurement accuracy as a function of temperature..... 113
Figure 59 HMP8 temperature measurement accuracy over full range.....113
Figure 60 HMP8 probe dimensions..... 116
Figure 61 Optional ball valve kit dimensions.....117
Figure 62 HMP9 humidity measurement accuracy as a function of temperature..... 118
Figure 63 HMP9 temperature measurement accuracy over full range.....119
Figure 64 HMP9 probe dimensions..... 121
Figure 65 MMP8 A_w measurement accuracy..... 122
Figure 66 MMP8 dimensions..... 124
Figure 67 TMP1 temperature measurement accuracy over full range..... 125
Figure 68 TMP1 probe dimensions.....127
Figure 69 Vaisala Humidity Calculator in Advanced mode.....133

List of tables

Table 1 Document versions (English) 11
Table 2 Related manuals 13
Table 3 Availability of output parameters 16
Table 4 Oil solubility coefficients for Vaisala moisture in oil products 46
Table 5 Default analog output configuration per output parameter 61
Table 6 Suitability of cleaning agents 84
Table 7 Troubleshooting table 88
Table 8 HMP1 measurement performance 93
Table 9 HMP1 operating environment 94
Table 10 HMP1 inputs and outputs 95
Table 11 HMP1 output parameters 95
Table 12 HMP1 compliance 95
Table 13 HMP1 mechanical specifications 95
Table 14 HMP3 measurement performance 96
Table 15 HMP3 operating environment 98
Table 16 HMP3 inputs and outputs 98
Table 17 HMP3 output parameters 98
Table 18 HMP3 compliance 99
Table 19 HMP3 mechanical specifications 99
Table 20 HMP4 measurement performance 100
Table 21 HMP4 operating environment 102
Table 22 HMP4 inputs and outputs 102
Table 23 HMP4 output parameters 102
Table 24 HMP4 compliance 103
Table 25 HMP4 mechanical specifications 103
Table 26 HMP5 measurement performance 104
Table 27 HMP5 operating environment 106
Table 28 HMP5 inputs and outputs 106
Table 29 HMP5 output parameters 106
Table 30 HMP5 compliance 107
Table 31 HMP5 mechanical specifications 107
Table 32 HMP7 measurement performance 108
Table 33 HMP7 operating environment 110
Table 34 HMP7 inputs and outputs 110
Table 35 HMP7 output parameters 111
Table 36 HMP7 compliance 111
Table 37 HMP7 mechanical specifications 111
Table 38 HMP8 measurement performance 112
Table 39 HMP8 operating environment 114
Table 40 HMP8 inputs and outputs 114
Table 41 HMP8 output parameters 114
Table 42 HMP8 compliance 115
Table 43 HMP8 mechanical specifications 115
Table 44 HMP9 measurement performance 117
Table 45 HMP9 operating environment 119

Table 46 HMP9 inputs and outputs.... 119
Table 47 HMP9 output parameters.... 120
Table 48 HMP9 compliance.... 120
Table 49 HMP9 mechanical specifications.... 120
Table 50 MMP8 measurement performance.... 121
Table 51 MMP8 operating environment.... 122
Table 52 MMP8 inputs and outputs.... 122
Table 53 MMP8 compliance.... 123
Table 54 MMP8 mechanical specifications.... 123
Table 55 TMP1 measurement performance.... 124
Table 56 TMP1 operating environment.... 125
Table 57 TMP1 inputs and outputs.... 126
Table 58 TMP1 compliance.... 126
Table 59 TMP1 mechanical specifications.... 126
Table 60 Connection cables.... 127
Table 61 HMP3 accessories.... 128
Table 62 HMP3 spare parts.... 128
Table 63 HMP4 spare parts.... 129
Table 64 HMP5 accessories.... 129
Table 65 HMP5 spare parts.... 129
Table 66 HMP7 accessories.... 130
Table 67 HMP7 spare parts.... 130
Table 68 HMP8 accessories.... 130
Table 69 HMP8 spare parts.... 131
Table 70 HMP9 accessories.... 131
Table 71 HMP9 spare parts.... 131
Table 72 MMP8 accessories.... 132
Table 73 MMP8 spare parts.... 132
Table 74 TMP1 accessories.... 132
Table 75 Default Modbus serial communication settings.... 134
Table 76 Modbus function codes.... 134
Table 77 Interpretation of 16-bit signed integer values.... 135
Table 78 Floating point measurement data registers (read-only).... 136
Table 79 Integer measurement data registers (read-only).... 137
Table 80 Modbus configuration data registers (writable).... 138
Table 81 Modbus function registers (writable).... 141
Table 82 Modbus status data registers (read-only).... 141
Table 83 Error codes in register 0x0203.... 142
Table 84 Modbus test registers (read-only).... 143
Table 85 Device identification objects.... 143
Table 86 Modbus exception responses.... 144

1. About this document

1.1 Version information

This document provides instructions for installing, using, and maintaining Vaisala HUMICAP® Humidity and Temperature Probes HMP1, HMP3, HMP4, HMP5, HMP7, HMP8, HMP9, Moisture in Oil Probe MMP8, and Temperature Probe TMP1.

Table 1 Document versions (English)

Document code	Date	Description
M212022EN-M	August 2025	Updated HMP9 cable gland and grommet installation information, added HMP9 probe head dimension details. Updated sections: • HMP9 probe (page 40) • Installing HMP9 through a cable gland (page 41) • HMP9 specifications (page 117)
M212022EN-L	May 2025	Updated the instructions on calibrating the probe with Indigo80 and added information on the HMP8 long probe option. Added information on HMP8 clasp nut and fitting body. Updated sections: • HMP8 probe (page 37) • Performing guided calibration with Indigo80 handheld indicator (page 78) • Performing manual adjustment with Indigo80 handheld indicator using previously measured values (page 79) • Restoring factory adjustment with Indigo80 handheld indicator (page 81) • HMP8 specifications (page 112) Added sections: • Tightening the clasp nut (page 39)

Document code	Date	Description
M212022EN-K	January 2024	Applicable from software version 1.2.8 onward. Added information on the LED behaviour of HMP3 and HMP7 to Probe structure (page 15) and Problem situations (page 88). Updated the description of environmental compensation in Environmental compensation (page 22). Added information on temperature compensation using the Indigo80 handheld indicator and the Indigo520 transmitter to Temperature compensation (page 22). Updated instructions on configuring the environment settings in Configuring environment settings with Indigo80 handheld indicator (page 68). Added an example of enabling temperature compensation to Example of enabling temperature compensation with Indigo80 handheld indicator (HMP7 and TMP1) (page 70). Updated information on the lengths of the MMP8 probe in MMP8 probe (page 45) and MMP8 specifications (page 121). The MMP8 probe is now available in two different lengths (262 mm and 448 mm). Added a new accessory, weatherproof carrying case, to Accessories and spare parts (page 127) for MMP8 and HMP8. Description of DRW212076SP updated. Corrected the output unit of water concentration in oil to be ppm_w throughout the document. Added information on default analog output values to Default analog output configuration with Indigo transmitters (page 61). Updated the HMP8, MMP8 and TMP1 dimension drawings. Added information on the probe calibration reminder and interval to Calibration and adjustment overview (page 72). The change list continues on the next page.

Document code	Date	Description
M212022EN-K	January 2024	Continued from the previous page. Updated the instructions on calibrating the probe with Indigo80 in: • Performing guided calibration with Indigo80 handheld indicator (page 78) • Performing manual adjustment with Indigo80 handheld indicator using previously measured values (page 79) • Restoring factory adjustment with Indigo80 handheld indicator (page 81) Updated instructions on restoring factory default settings with Indigo80 in Restoring factory default settings with Indigo80 handheld indicator (page 91). Updated the storage temperature ranges for HMP4, HMP5, HMP7, HMP8 and TMP1 probes in: • HMP4 specifications (page 100) • HMP5 specifications (page 104) • HMP7 specifications (page 108) • HMP8 specifications (page 112) • TMP1 specifications (page 124) Updated the probe cable lengths for HMP3, HMP7 and HMP8 probes in: • HMP3 specifications (page 96) • HMP7 specifications (page 108) • HMP8 specifications (page 112) Added T63 response time for the HMP1 probe in HMP1 specifications (page 93).

1.2 Related manuals

For the latest versions of these documents, see docs.vaisala.com.

Table 2 Related manuals

Document code	Name
M211982EN	Vaisala HMP Series with MMP8 and TMP1 Quick Guide
M212287EN	Vaisala Indigo500 Series Transmitters User Guide
M212849EN	Vaisala Indigo300 Transmitter User Guide
M212842EN	Vaisala Indigo201 Analog Output Transmitter User Guide

Document code	Name
M212843EN	Vaisala Indigo202 Digital Transmitter User Guide
M212722EN	Vaisala Indigo80 Handheld Indicator User Guide

1.3 Documentation conventions

WARNING! Warning alerts you to a serious hazard. If you do not read and follow instructions carefully at this point, there is a risk of injury or even death.

CAUTION! Caution warns you of a potential hazard. If you do not read and follow instructions carefully at this point, the product could be damaged or important data could be lost.

Highlights important information on using the product.

Gives information for using the product more efficiently.

Lists tools needed to perform the task.

Indicates that you need to take some notes during the task.

1.4 Trademarks

Vaisala® and HUMICAP® are registered trademarks of Vaisala Oyj.

Modbus® is a registered trademark of Schneider Automation Inc.

All other product or company names that may be mentioned in this publication are trade names, trademarks, or registered trademarks of their respective owners.

2. Product overview

HMP series probes are humidity and temperature measurement probes with a digital output (Modbus® protocol). The probes are designed for demanding humidity and temperature measurement applications. The probes have a two-part structure, with measurement electronics contained in the probe body and sensor(s) in the probe head. The probe body and the probe head are connected by a fixed cable, except on the HMP1 model. Length options for this connecting cable depend on the probe model.

The probes are compatible with Vaisala Indigo transmitters and Vaisala Indigo80 Handheld Indicator. They can also be connected to Vaisala Insight software for configuration, calibration, adjustment, diagnostics, and temporary online monitoring.

2.1 Probe structure

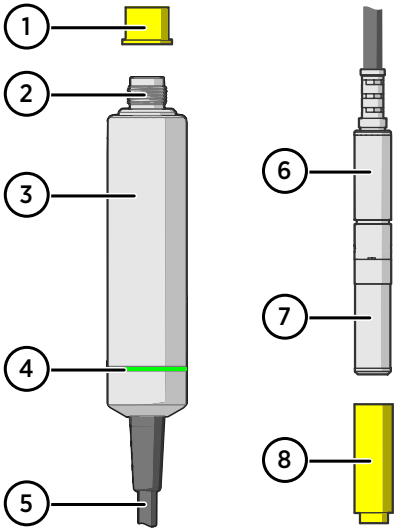

Figure 1 Probe parts

1 Protection cap (remove before use)
2 5-pin M12 connector
3 Probe body with type label
4 Status indicator LED:

Green	Power on and probe online, flashes when communicating
Red	Error
Off	Power off, or indicator disabled

5 Fixed probe cable, variable length (do not cut).
HMP1 model does not have a probe cable, as its probe head is directly attached to the probe body.
6 Probe head (HMP7 model shown)
7 Location of sensor(s) on the probe head. Other probe models have a removable filter over the sensors but HMP1, HMP9, and TMP1 do not.
8 Protection cap (remove before use)

To prevent the warming of the indicator LED from causing a slight measurement error, HMP1 keeps the indicator normally off (even when power is on). The same applies to HMP3 and HMP7 probes that have a 0.15-m (0.49-ft) probe connection cable. If the probe is in error state, the red LED is shown.

2.2 Basic features and options

- Comprehensive list of output parameters
- Sensor purge provides superior chemical resistance (HMP models only)
- Condensation prevention feature minimizes condensation on probe (HMP models with composite sensors only)
- Traceable calibration certificate:
  - HMP and MMP models: 6 points for humidity, 1 point for temperature
  - TMP1: 2 points for temperature
- Standalone Modbus® RTU over RS-485
- Compatible with Indigo transmitters and Indigo80 handheld indicator
- Can be connected to Vaisala Insight PC software for configuration, calibration, adjustment, diagnostics, and temporary online monitoring

2.3 Output parameters

On HMP probe models, the values of all available output parameters are locked when the sensor is being warmed by the sensor purge or condensation prevention functions.

● Output parameter is available on this model.
◐ Output parameter is available on this model, but its value is unavailable when condensation prevention functions are warming the sensor. Writing temperature to Modbus register 0x0334 from an external source makes the output value available during condensation prevention.
– Output parameter is not available on this model.

Table 3 Availability of output parameters

Output parameter	Output unit	HMP1, 3, 4, 5, 7, 8, and 9	MMP8	TMP1
Absolute humidity	g/m^3	◐	–	–
Absolute humidity at NTP	g/m^3	◐	–	–
Dew/frost point temperature	°C	●	–	–
Dew/frost point temperature at 1 atm	°C	●	–	–
Dew point temperature	°C	●	–	–
Dew point temperature at 1 atm	°C	●	–	–
Dew/frost point depression	°C	◐	–	–
Enthalpy	kJ/kg	◐	–	–
Mixing ratio	g/kg	●	–	–
Relative humidity	%RH	◐	–	–

Output parameter	Output unit	HMP1, 3, 4, 5, 7, 8, and 9	MMP8	TMP1
Relative humidity (dew/frost)	%RH	◐	–	–
Relative saturation	%RS	–	●	–
Temperature	°C	◐	●	●
Water activity	-	–	●	–
Water concentration	ppm_v	●	–	–
Water concentration in oil	ppm_w	–	●	–
Water concentration (wet basis)	vol-%	●	–	–
Water mass fraction	ppm_w	●	–	–
Wet-bulb temperature	°C	◐	–	–
Water vapor pressure	hPa	●	–	–
Water vapor saturation pressure	hPa	◐	–	●

2.4 Additional features with Indigo transmitters

Connecting the probe to an Indigo transmitter provides a wide range of additional options for outputs, measurement viewing, status monitoring, and configuration interface access.

Examples of additional features available with Indigo520 transmitters:

- Touchscreen display for real-time data viewing and configuration
- Support for 2 probes simultaneously
- 4 configurable analog outputs
- 2 configurable relays
- 2-wire current loop analog input
- Barometer module for barometric pressure measurement (optional module)
- Ethernet connection with web interface for remote access
- Modbus TCP/IP protocol
- Service port for connecting to Indigo80 handheld indicator

Examples of additional features available with Indigo300 transmitters:

- Numerical and graphical display for real-time data viewing
- 3 pre-configurable analog outputs
- Service port on the front for connecting to Vaisala Insight PC software or Indigo80 handheld indicator for easy configuration access

Examples of additional features available with Indigo200 series transmitters:

- 3.5” TFT LCD color display or non-display model with LED indicator
- Digital output or 3 analog outputs (depending on the transmitter model)
- 2 configurable relays

- USB-C connection to Vaisala Insight PC software for easy configuration access

Available features vary depending on the Indigo transmitter model. For more information on Indigo transmitters, see vaisala.com/indigo.

More information

- Default analog output configuration with Indigo transmitters (page 61)

2.5 Safety

WARNING! When returning a product for calibration or repair, make sure it has not been exposed to dangerous contamination, and is safe to handle without special precautions.

CAUTION! Do not attempt to open the probe body. There are no user serviceable parts inside the probe body.

CAUTION! Do not touch the probe head with your bare hands. Touching will deposit impurities on the probe head.

CAUTION! Be aware that the probe head may become hot to touch when condensation prevention heating or sensor purge functions are active.

2.6 ESD protection

Electrostatic discharge (ESD) can cause immediate or latent damage to electronic circuits. Vaisala products are adequately protected against ESD for their intended use. However, it is possible to damage the product by delivering an electrostatic discharge when touching, removing or inserting any objects inside the equipment housing.

Avoid touching component contacts or connectors when working with the device.

2.7 Regulatory statements

2.7.1 FCC Part 15 compliance statement

This equipment has been tested and found to comply with the limits for a Class B digital device, pursuant to Part 15 of the FCC rules. These limits are designed to provide reasonable protection against harmful interference in a residential installation. This equipment generates, uses and can radiate radio frequency energy and, if not installed and used in accordance with the instructions, may cause harmful interference to radio communications. However, there is no guarantee that the interference will not occur in a particular installation. If this equipment does cause harmful interference to radio or television reception, which can be determined by turning the equipment off and on, the user is encouraged to try to correct the interference by one or more of the following measures:

- Reorient or relocate the receiving antenna.
- Increase the separation between the equipment and receiver.
- Connect the equipment into an outlet on a circuit different from that to which the receiver is connected.
- Consult the dealer or an experienced radio/TV technician for help.

CAUTION! Changes or modifications to this equipment not expressly approved by the party responsible for compliance could void the user's authority to operate the equipment.

This device complies with part 15 of the FCC Rules. Operation is subject to the following two conditions: (1) This device may not cause harmful interference, and (2) this device must accept any interference received, including interference that may cause undesired operation.

2.7.2 Canada ICES-3 / NMB-3 compliance statement

This Class B digital apparatus complies with Canadian ICES-003.

Cet appareil numerique de la classe B est conforme a la norme NMB-003 du Canada.

3. Functional description

3.1 HUMICAP technology

Vaisala HUMICAP® is a capacitive thin-film polymer sensor consisting of a substrate on which a thin film of polymer is deposited between two conductive electrodes. The sensing surface is coated with a porous metal electrode to protect it from contamination and exposure to condensation. The substrate is typically glass or ceramic.

The thin-film polymer either absorbs or releases water vapor as the relative humidity of the measurement environment rises or falls. The dielectric properties of the polymer film depend on the amount of absorbed water. As the relative humidity around the sensor changes, the dielectric properties of the polymer film change, and so does the capacitance of the sensor. Capacitance is converted into a humidity reading. The HUMICAP sensor is complemented by a temperature sensor, which is bonded together with the capacitive polymer on some of the sensor variants. Additional output parameters such as dew point are calculated from the readings measured by the sensors.

HUMICAP sensors with bonded temperature sensors are also known as **composite sensors**. Probes with composite sensors can use the **sensor purge** function to maintain sensor performance. They also implement **condensation prevention** functions that are a key element in achieving an excellent stability and good condensation resistance in high humidity applications.

The integrated sensor arrangement on the HMP1 and HMP9 probes is different from the composite sensors used in the other HMP probes. However, they are also capable of using condensation prevention heating and sensor purge.

3.2 Sensor purge

Sensor purge heats the sensor to a high temperature, which evaporates excess molecules out of the sensor polymer. This minimizes the drift at the wet end of humidity readings, and removes contaminants from the sensor element. The heating phase is followed by a cooling phase where the sensor cools down to ambient temperature.

During sensor purge the values of the output parameters stay frozen at their last measured values. Sensor purge takes a few minutes to complete, after which measurement continues normally and updated values of output parameters are again available.

When ordered with sensor purge enabled, HMP model probes perform the purge at one day intervals (known as **interval purge**). If desired, sensor purge can also be performed when the probe is powered on (known as **startup purge**). Purge settings can be configured with the Insight software, the Indigo80 handheld indicator, or using the Modbus protocol.

To allow the sensor purge to be completed in a reasonable time, it will not be started if the ambient temperature is below 0 °C (+32 °F).

3.3 Condensation prevention functions

Condensation prevention functions prevent water from condensing on the sensor and interfering with humidity measurement. Use of condensation prevention is controlled by a single setting that can be changed with the Insight software, the Indigo80 handheld indicator, or using the Modbus protocol. The setting is only available if your probe supports condensation prevention.

By default, condensation prevention is off.

However, the HMP7 model can be ordered from Vaisala with the feature enabled.

When condensation prevention is enabled, the probe will automatically use its available condensation prevention functions. When warming is active, values of output parameters that depend on temperature measurement (for example, relative humidity) are unavailable, unless the temperature compensation setting is set to read the temperature from an external source. Output parameters that can be measured or calculated without this external temperature information, such as dew point temperature, are available even without the temperature input.

Sensor warming

Sensor warming is available to all HMP series probes with composite sensors, HMP1, and HMP9.

Sensor warming warms the humidity sensor when necessary to keep its temperature above the dew point of the measurement environment. When sensor warming is activated, all temperature-dependent output parameters become unavailable, unless the temperature compensation setting is set to read the temperature from an external source. The output parameters become available again 4 minutes after the warming is stopped.

Sensor warming is intended for improving the condensation tolerance of the probe in measurement environments that may occasionally cause condensation to form. It is not intended for environments where continuous warming is needed.

Probe heating

Probe heating is available on HMP7 model only. Probe heating warms up the entire probe head instead of just the sensor. It is intended for use in challenging measurement environments where condensation on the probe would otherwise present a problem.

Probe heating always applies some heating power even when the sensor is not near condensation, so temperature-dependent output parameters are permanently unavailable when probe heating is used, unless external temperature information is provided to the probe.

If the ambient dew point rises close to current sensor temperature, the heating power is increased to avoid condensation.

If you use probe heating, be sure to mount the HMP7 probe head in a way that prevents the heat from being conducted away from the probe. Tightly connecting the HMP7 probe head to a metal structure may prevent the probe from maintaining probe temperature above the dew point. It will also heat the structure which may be undesirable.

Even if condensation prevention has been turned on, probe heating is not active if supply voltage is below 18 V DC. For example, this is the case when HMP7 probe is connected to Insight software using the Indigo USB Adapter.

More information

- Configuring condensation prevention with Insight (page 55)

3.4 Environmental compensation

Environmental compensations – pressure compensation and temperature compensation – improve the measurement accuracy of the probe. You can configure the settings with the Insight software or the Indigo80 handheld indicator, or using the Modbus protocol.

3.4.1 Pressure compensation

The pressure of the measured environment affects the accuracy of humidity calculations, especially calculations that are dependent on pressure (for example, mixing ratio). To achieve accurate output of all humidity parameters, you are recommended to update the value of the pressure compensation setpoint to match the environmental pressure when installing the probe.

For example, when you install the probe in a process with a pressure differing from normal atmospheric pressure, update the correct pressure into the pressure compensation setpoint parameter or register of the probe using the Insight software or the Indigo80 handheld indicator.

The entered value is persistent and remains unchanged at device restart.

3.4.2 Temperature compensation

Condensation prevention functions disable the probe's own temperature measurement and output parameters that depend on it. To enable temperature-dependent output parameters even when condensation prevention functions are used, you need to set an external source for the temperature compensation setpoint.

To get the most accurate measurement values, the external source needs to be able to provide the temperature compensation setpoint value constantly in real time, and the value needs to correspond to the temperature of the probe's measurement environment as accurately as possible. A suitable measurement point is as close to the probe as possible, but yet far enough so that ongoing condensation prevention warming of the probe does not have an effect on the measured value.

Temperature compensation using Indigo80 handheld indicator

If you are using the Indigo80 handheld indicator with your probe, the external temperature source can be any Indigo-compatible probe with a temperature output (for example, TMP1) that is connected to the same Indigo80 as your probe (for example, HMP7). When Indigo80 detects the connected probes, it guides you to check the probes' environment settings, where you can select to start as well as stop reading the temperature value from another probe.

When you disconnect and then reconnect the same probes to the same ports in Indigo80, Indigo80 will continue reading the temperature value from the previously selected probe. The same applies also when you restart Indigo80 with the same probes connected.

Temperature compensation using Indigo520 transmitter

If you are using the Indigo520 transmitter with your probes, TMP1 can function as the temperature source for HMP7. Temperature compensation turns on automatically when you connect HMP7 to probe 1 connection terminal and TMP1 to probe 2 connection terminal of the transmitter. Other probe combinations are not supported directly, but you can still update the temperature value through the Modbus TCP/IP interface of Indigo520.

For more information, see Indigo500 User Guide (M212287EN).

More information

- Configuring environment settings with Indigo80 handheld indicator (page 68)
- Example of enabling temperature compensation with Indigo80 handheld indicator (HMP7 and TMP1) (page 70)

3.5 Filtering factor

The filtering factor determines how quickly the results of measurement cycles are reflected in values of output parameters. You can use the filtering factor to slow down the response time of the measurement, filtering out rapid changes and measurement noise.

- Maximum value (1) = No filtering, fastest measurement. Output shows 100 % of the most recent measured value.
- Less than maximum value = Filtering is applied and measurement response time is reduced. For example, defining a value that is 90 % of the maximum value means that the filtered output reading = 90 % of the most recent measured value + 10 % of the previous reading.

Filtering factor settings can be configured with the Insight software, the Indigo80 handheld indicator, or using the Modbus protocol.

More information

- Example of configuring filtering factor with Indigo80 handheld indicator (page 67)

4. Installation

When you choose the installation location for the probe, consider the following:

- Verify the operating environment specification of the probe model. The probe head typically has a much wider operating temperature range than the probe body.
- If the temperature of the measured environment differs greatly from ambient temperature, the entire probe head and preferably plenty of cable must be inside the measured environment. This prevents measurement inaccuracy caused by heat conduction along the cable.
- Probe mounting options are model-specific.

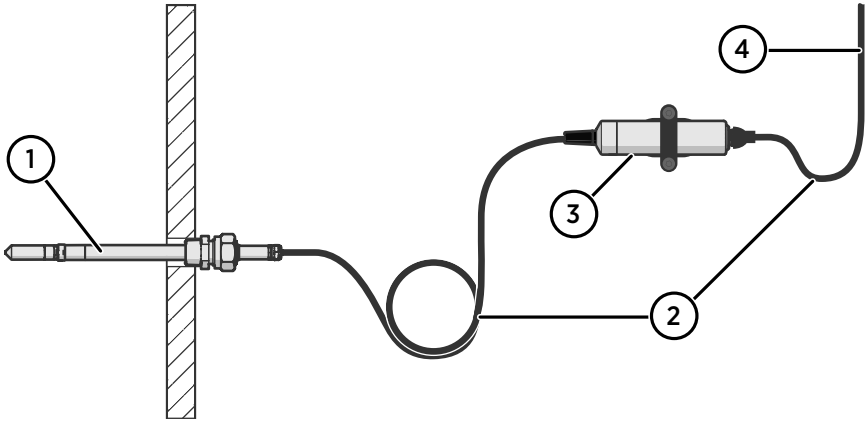

Figure 2 Example installation

1 Mount the probe head horizontally to prevent any water condensing on the probe head from running to the sensors.
2 Let the cable hang loosely to prevent condensed water from running along the cable to the probe body or probe head.
3 Attach the probe body to a wall or other surface using supplied probe holder (item code ASM213582).
4 Cable to Modbus master or Indigo device.

More information

‣ Default communication settings (page 134)

4.1 Probe holder ASM213582

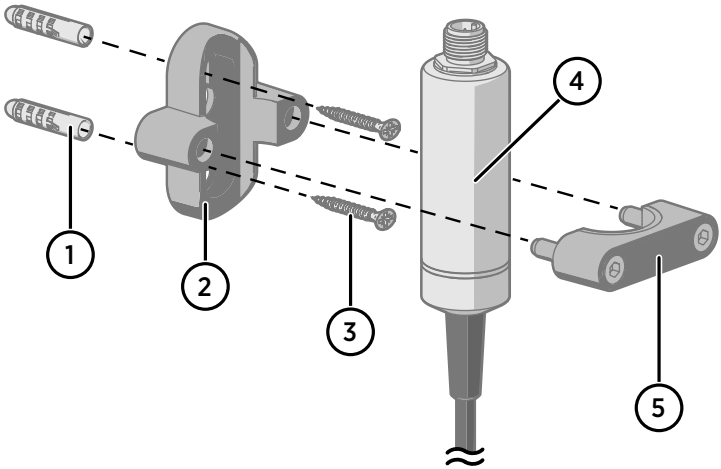

1 Wall plugs (2 pcs included, 6×30 nylon)
2 Base of the probe holder
3 Screws (2 pcs included, 4.8×25 DIN7981C PZ A4)
4 Ø 25 mm (0.98 in) probe body
5 Top of the probe holder with 2 hex screws (4-mm socket)

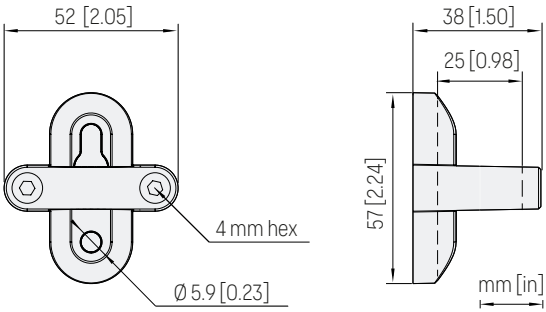

Figure 3 Probe holder ASM213582 dimensions

4.1.1 Mounting the probe body using probe holder ASM213582

Probe holder ASM213582 is designed for attaching a 25 mm probe body to a wall or other surface with screws.

1. Use a 4-mm Allen key to open the hex screws and remove the top part of the probe holder.
2. Hold the base part against the mounting surface and mark the locations of the 2 screw holes.
3. Drill holes at the marked locations using a 6-mm drill bit. Make the holes at least 30 mm deep.
4. Insert the wall plugs in the holes.
5. Mount the base part using screws.
6. Insert the probe body in the holder.
7. Place the top part on the base and tighten the hex screws with a 4-mm Allen key.

4.2 Wiring

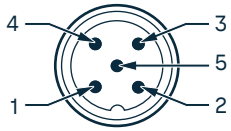

Figure 4 M12 5-pin A-coded male connector pinout

Pin #	Function	Notes	Wire colors in Vaisala cables
1	Power supply	Operating voltage: • HMP7: 18–30 V DC • Other models: 15–30 V DC Current consumption: 10 mA typical, 500 mA max.	Brown
2	RS-485 -		White
3	Power GND and RS-485 common		Blue
4	RS-485 +		Black
5	Not connected		Gray

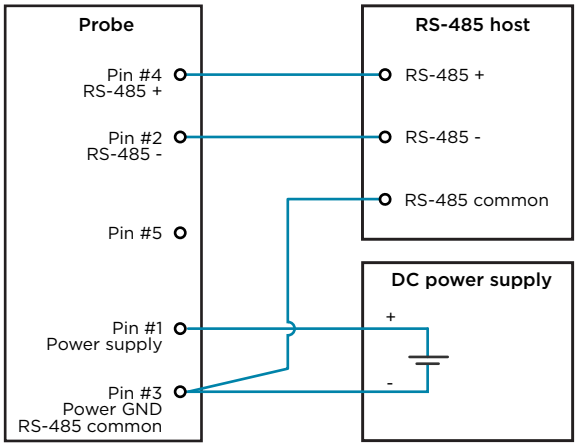

Figure 5 RS-485 wiring

Recommended maximum length of the RS-485 line is 30 m (98 ft).

4.3 HMP1 probe

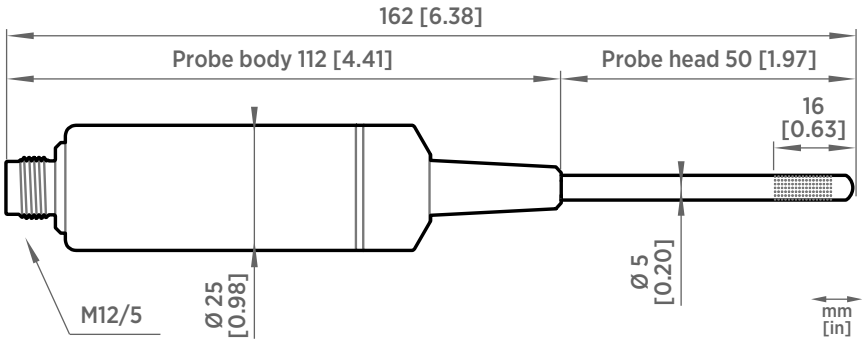

Figure 6 HMP1 probe dimensions

Vaisala HUMICAP® Humidity and Temperature Probe HMP1 is designed for ambient measurement in indoor spaces. Its probe head and body are integrated into a single unit with no cable between them. HMP1 can be directly connected to Indigo300 and Indigo200 series transmitters to form a single wall-mounted unit.

- Operating temperature −40 ... +60 °C (−40 ... +140 °F)

- Integrated filter (non-replaceable)

CAUTION! Do not damage the probe head by bending, crushing, or striking it.

4.4 HMP3 probe

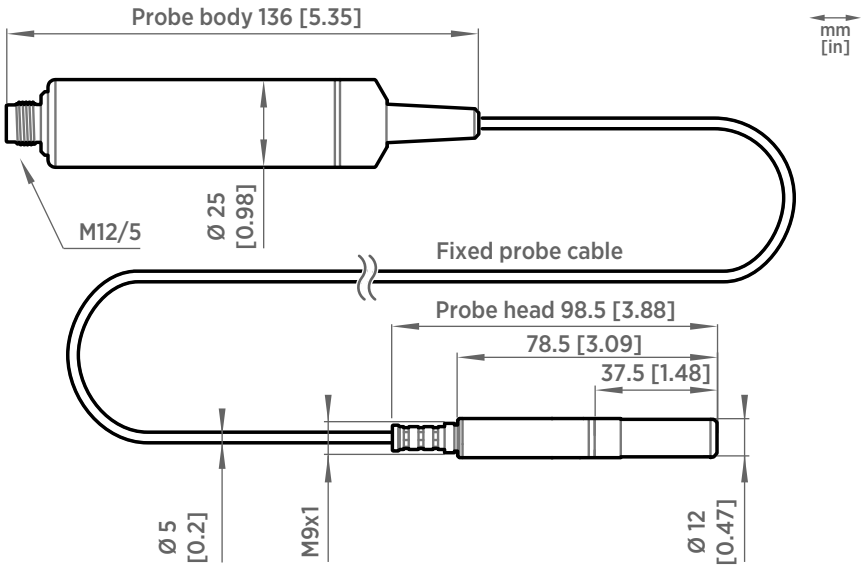

Figure 7 HMP3 probe dimensions

Vaisala HUMICAP® Humidity and Temperature Probe HMP3 is a general-purpose probe designed for various industrial processes. The probe structure allows for replacing the sensor without tools, making the probe suitable for applications such as paint booths and other industrial applications where periodic recalibration alone is not sufficient for maintaining the probe performance. Other applications include, for example, industrial HVAC systems, cleanrooms, and environmental chambers.

- Operating temperature for probe head −40 ... +120 °C (−40 ... +248 °F)
- Operating temperature for probe body −40 ... +80 °C (−40 ... +176 °F)

If purchased with a composite sensor instead of the field-replaceable HUMICAP® R2 sensor, HMP3 can use the sensor purge feature. In environments with high concentrations of chemicals and cleaning agents, sensor purge helps to maintain measurement accuracy between calibration intervals.

More information

- Replacing the HUMICAP® sensor (page 85)
- Mounting probe head inside DTR502B (page 50)

4.4.1 Vapor-tight installations with cable gland

With an AGRO M20×1.5 cable gland (Vaisala item HMP247CG), the probe cable can be installed vapor tight. For an installation example, see Example installation of a heated probe head (page 35).

4.4.2 Duct installation kit for humidity probe

With an optional duct installation kit (Vaisala item 210697) to support the probe head, the probe can be installed to a chamber or duct. For more information, see Duct Installation Kit (210697) Installation Guide (M212351EN).

4.4.3 Probe holder ASM213382

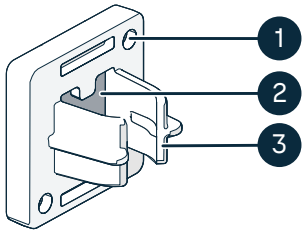

Figure 8 Probe holder ASM213382

1 Holes for attaching the holder with screws (screws not included)
2 Magnet
3 Probe attachment

The probe holder (Vaisala item ASM213382SP, includes 5 probe holders) is a versatile mounting accessory for securing HMP3 and HMP7 probes with a max. 2 m cable between the probe body and the probe head. To attach the probe, simply press the probe head into the probe attachment.

- The magnet can hold the weight of a max. 2 m cable between the probe body and the probe head. Do not use the magnet with probes which have probe cables longer than 2 m.
- The probe holder is not suitable for use at extreme temperatures.

Make sure that vibration or other external factors will not unintentionally change the probe position after installation. For permanent installations, Vaisala recommends attaching the holder with additional screws.

4.5 HMP4 probe

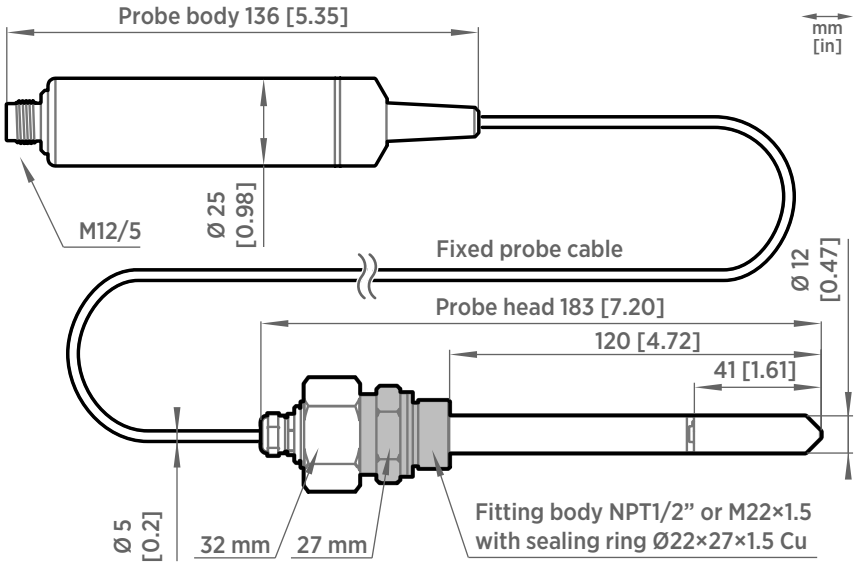

Figure 9 HMP4 probe dimensions

Vaisala HUMICAP® Humidity and Temperature Probe HMP4 is designed for high-pressure applications such as compressed air systems in maritime, breathing air, and industrial applications, where measurement performance and chemical tolerance are essential.

- Temperature measurement range −70 ... +180 °C (−94 ... +356 °F)
- Operating pressure 0–100 bar
- Operating temperature for probe body −40 ... +80 °C (−40 ... +176 °F)
- M22×1.5 or NPT1/2" fitting body

Use a sealing ring (Ø22×27×1.5 Cu) with the M22×1.5 fitting. Replace the sealing ring every time the probe is detached. Three sealing rings are supplied with the fitting.

4.6 HMP5 probe

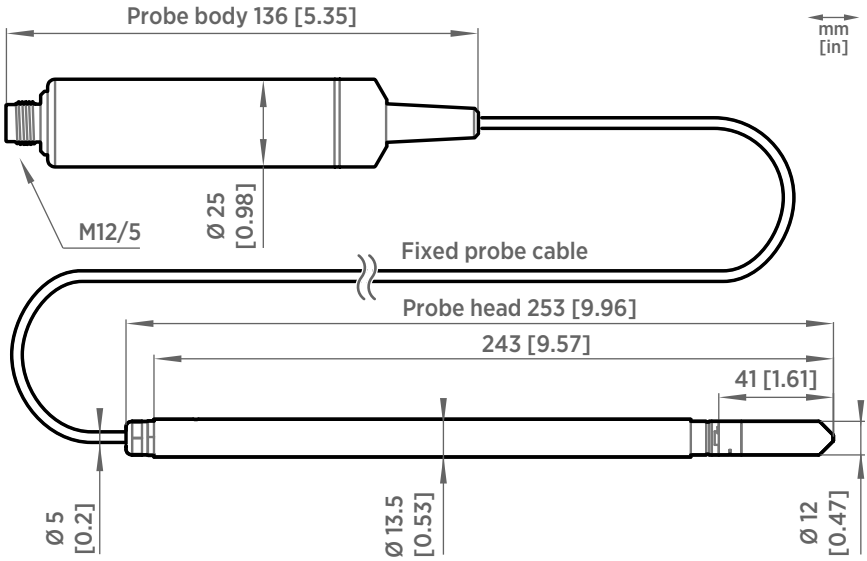

Figure 10 HMP5 probe dimensions

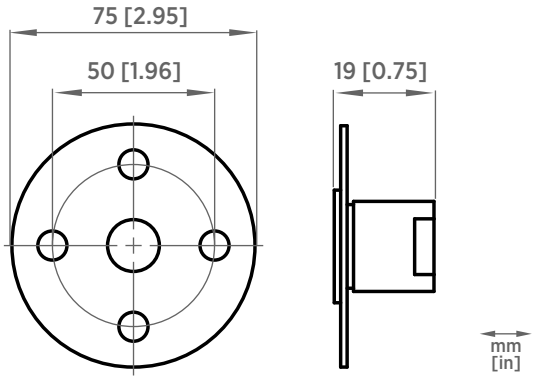

Figure 11 Optional mounting flange 210696 dimensions

Vaisala HUMICAP® Humidity and Temperature Probe HMP5 is designed for high-temperature applications such as baking ovens, pasta dryers, and industrial drying kilns, where measurement performance and chemical tolerance are essential.

- Temperature measurement range −70 ... +180 °C (−94 ... +356 °F)

- Operating temperature of probe body −40 ... +80 °C (−40 ... +176 °F)
- 250-mm (9.84 in) probe allows easy process installation through insulation

4.7 HMP7 probe

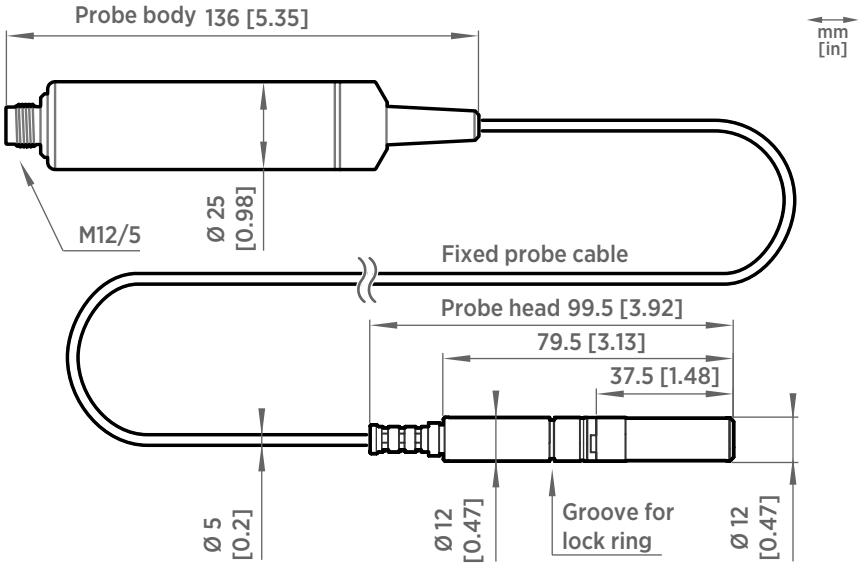

Figure 12 HMP7 probe dimensions

Vaisala HUMICAP® Humidity and Temperature Probe HMP7 is designed for applications that involve constant high humidity or rapid changes in humidity, such as drying and test chambers, combustion air, and other humidifiers and meteorological measurements, where measurement performance and chemical tolerance are essential.

- Temperature measurement range −70 ... +180 °C (−94 ... +356 °F)
- Operating temperature of probe body −40 ... +80 °C (−40 ... +176 °F)
- Condensation prevention with probe heating
- Vapor and pressure proof construction

Condensation prevention with probe heating

Condensation prevention on HMP7 uses a combination of probe heating and sensor warming. Probe heating keeps the entire probe head above the current dew point temperature, which prevents condensation from forming on the probe.

The values of output parameters that are dependent on temperature measurement (such as relative humidity) are unavailable when the probe is warming itself, unless the true temperature of the measured environment is updated to the temperature compensation register of the probe from another measurement instrument (for example, TMP1 model probe). Output parameters that can be measured or calculated without this external temperature information, such as dew point temperature, are available even without the temperature input.

The Indigo80 handheld indicator and Indigo500 transmitters support HMP7 temperature compensation from TMP1. For more information, see:

- Indigo500 User Guide (M212287EN)

HMP7 in fuel cell applications

Probe heating makes HMP7 ideal for use in fuel cell applications, specifically proton-exchange membrane fuel cells (PEMFC). Humidity measurements in fuel cell applications are performed in a high-humidity environment, typically over 80% relative humidity. Performing humidity measurements in hot, near-condensing environments is a challenging task, and the humidity sensor must be adequately protected against saturation to allow continuous measurement. Probe heating accomplishes just that.

HMP7 can be ordered from Vaisala with special settings that have been optimized for the fuel cell application. These settings include a faster probe heating control that allows the probe to quickly heat the probe to stay ahead of the rising dew point temperature.

WARNING! HMP7 is not designed for use in hazardous environments with potentially explosive atmospheres. Make sure no part of the probe is placed in a potentially explosive gas mixture.

For more information on HMP7 in fuel cell applications, see HMP7 and HMT317/337 for Fuel Cell Applications Technical Note (M212840EN).

More information

- Mounting probe head inside DTR502B (page 50)

4.7.1 Example installation of a heated probe head

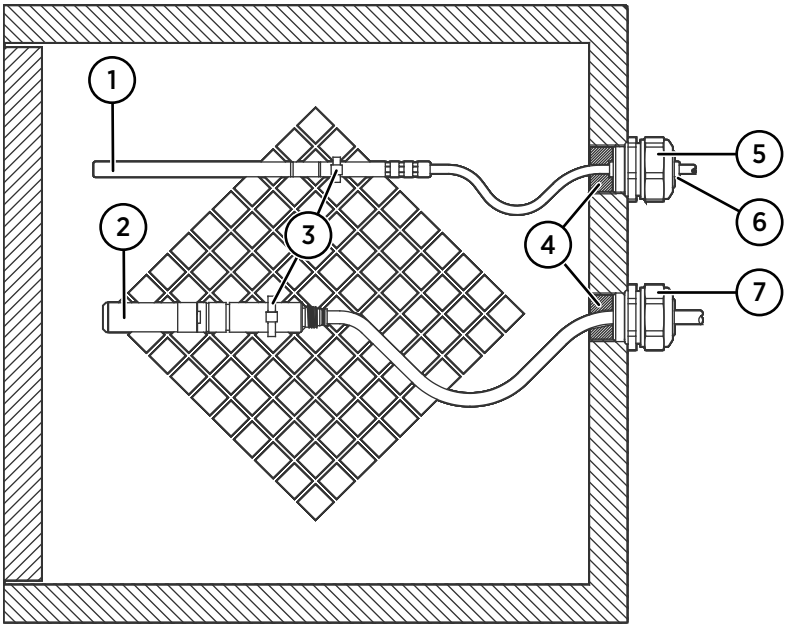

Figure 13 Heated probe and temperature probe installation in a climate chamber

1 Temperature probe head
2 Humidity probe head with probe heating
3 Stainless steel cable tie or similar fastener
4 To be sealed, for example with silicone
5 Cable gland, for example: AGRO 1100.12.91.065
6 PTFE sleeve
7 Cable gland AGRO (Vaisala item code HMP247CG)

Let the probe cable hang loosely to prevent condensed water from running to the probe head. Avoid attaching the heated probe head in a way that conducts the heat away, as this may prevent the probe head from maintaining a temperature that is above dew point.

4.7.2 Vapor-tight installations with cable gland

With an AGRO M20×1.5 cable gland (Vaisala item HMP247CG), the probe cable can be installed vapor tight. For an installation example, see Example installation of a heated probe head (page 35).

4.7.3 Duct installation kit for humidity probe

With an optional duct installation kit (Vaisala item 210697) to support the probe head, the probe can be installed to a chamber or duct. For more information, see Duct Installation Kit (210697) Installation Guide (M212351EN).

4.7.4 Pressure-tight Swagelok installation kit

Swagelok installation kit (Vaisala items SWG12ISO12, SWG12ISO38, and SWG12NPT12) is an optional accessory which includes a pressure-tight Swagelok® connector with ISO1/2″, ISO3/8″ or NPT1/2″ thread.

For instructions on how to tighten the Swagelok connector properly, see the installation instructions provided with the installation kit, SWG12ISO12 Swagelok® Connector Assembly Drawing (DRW218087).

CAUTION! Note that overtightening the connector may damage the probe head.

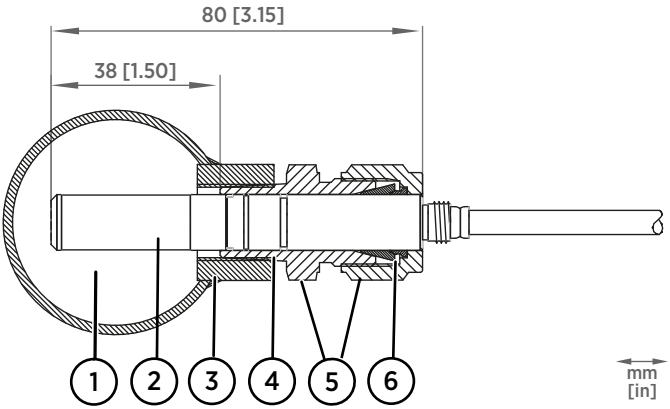

Figure 14 HMP7 installation to pipeline using a Swagelok installation kit

1 Max. process pressure 10 bar (145 psi), max temperature +180 °C (+356 °F)
2 Probe head
3 Duct connector
4 ISO1/2″, ISO3/8″ or NPT1/2″ thread
5 Swagelok connector
6 Ferrules

4.8 HMP8 probe

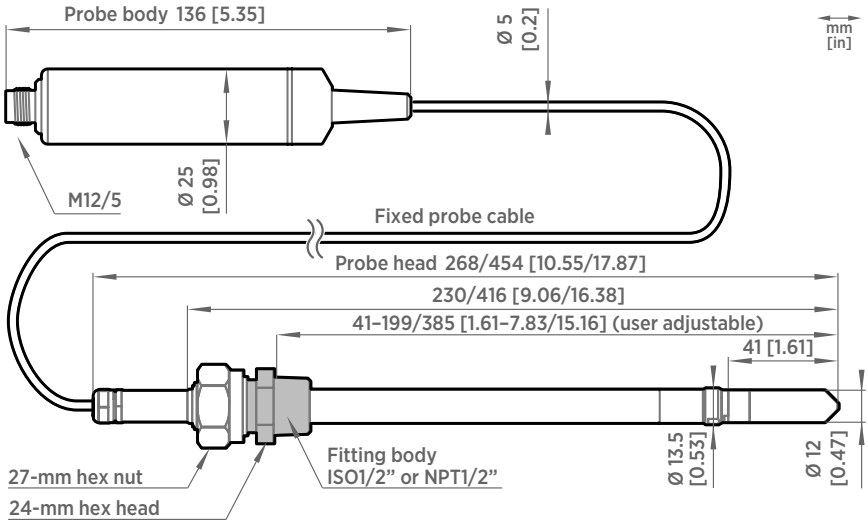

Figure 15 HMP8 probe dimensions

Vaisala HUMICAP® Humidity and Temperature Probe HMP8 is designed for pressurized applications in compressed air systems, refrigerant dryers, and other pressurized industrial applications, where easy insertion and removal of the probe and adjustable installation depth into the pipeline are needed.

HMP8 is available in two different lengths (268-mm and 454-mm probe head options), and the installation depth of the probe is adjustable.

- Temperature measurement range −70 ... +180 °C (−94 ... +356 °F)
- Operating temperature of probe body −40 ... +80 °C (−40 ... +176 °F)
- Operating pressure 0–40 bar
- Probe installation depth can be freely adjusted and probe can be hot-swapped from pressurized pipelines with an optional ball valve kit
- ISO1/2″ or NPT1/2″ fitting body

For more information on using the probe with the ball valve, see Ball Valve Kit (BALLVALVE-1) Installation Guide (M212837EN).

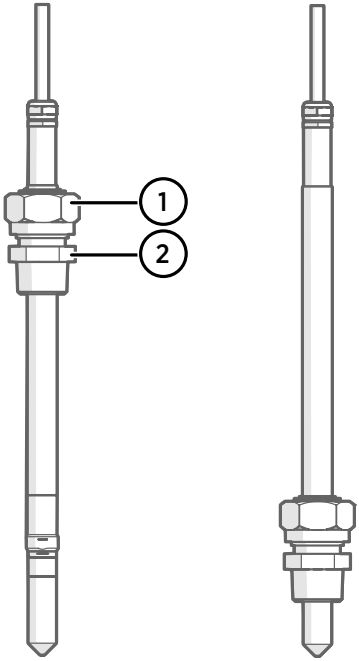

Figure 16 HMP8 probe head

1 Clasp nut, 24-mm hex nut
2 Fitting body, 27-mm hex head

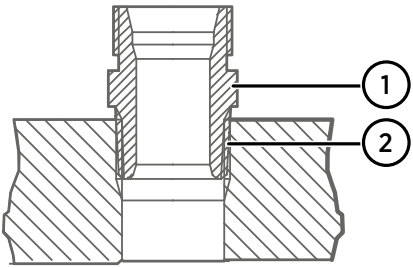

Figure 17 Sealing of fitting body into process

1 Fitting body with 24 mm hex nut and tapered thread
2 Seal with a suitable thread sealant. For example, LOCTITE® No. 542 with activator No. 7649, MEGA-PIPE EXTRA No. 7188, or PTFE tape.

Follow the instructions of the sealant manufacturer.
PTFE tape does not lock the parts together. Use two fork wrenches (24 mm and 27 mm) when tightening and opening the clasp nut of the probe.

4.8.1 Tightening the clasp nut

1. Adjust the probe to a suitable depth according to the type of installation.
2. Tighten the clasp nut to finger tightness.
3. Draw a line on the fitting screw and the clasp nut to mark their position.
4. Tighten the nut a further 50 ... 60º (1/6 turn) with a wrench. If you have a suitable torque wrench, tighten the nut to max 45 ±5 Nm (33 ±4 ft-lbs).

   Do not overtighten the clasp nut.

CAUTION! Take care not to damage the probe body. A damaged body makes the probe less tight and may prevent it from going through the clasp nut.

CAUTION! In pressurized processes it is essential to tighten the supporting nuts and screws very carefully to prevent loosening of the probe by the action of pressure.

When installed in a process with a pressure differing from normal atmospheric pressure, input the correct pressure into the pressure compensation setpoint parameter or register of the probe. This allows the probe to apply the appropriate pressure compensation into its measurement results.

4.9 HMP9 probe

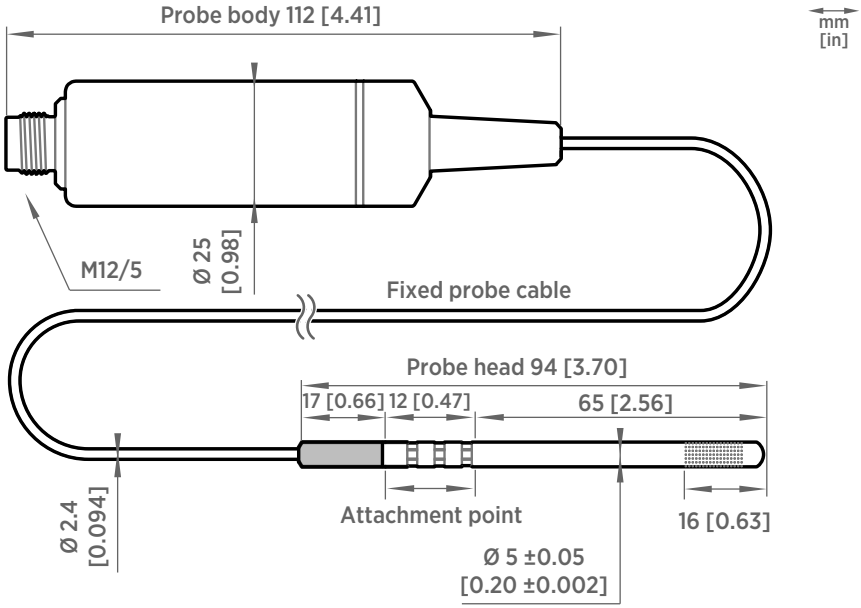

Figure 18 HMP9 probe dimensions

Vaisala HUMICAP® Humidity and Temperature Probe HMP9 is designed for easy installation into rapidly changing environments where fast response time, measurement performance, and chemical tolerance are essential.

The probe head can be mounted through thin metal walls using the included cable gland or a mounting grommet. The ASM213199 kit delivered with HMP9 includes a cable gland and two rubber grommets. The rubber grommets are intended for installations into sheet metal that is up to 2 mm (0.08 in) thick:

- Large rubber (EPDM) grommet for 0.5–2 mm (0.02-0.08 in) thick sheet metal
  - 12.5-mm (0.49 in) drill hole
- Small rubber (TPR) grommet for 1.6 mm (0.06 in) thick sheet metal
  - 6.5-mm (0.25 in) drill hole

For cable gland installation instructions, see Installing HMP9 through a cable gland (page 41).

You can also attach the probe head directly using a zip tie. The probe head should be attached from the point near the black plastic part.

- Temperature measurement range −40 ... +120 °C (−40 ... +248 °F)
- Operating temperature of probe body −40 ... +60 °C (−40 ... +140 °F)
- Integrated filter (non-replaceable)

CAUTION! Do not damage the probe head by bending, crushing, or striking it. Avoid overtightening when installing the probe head through a cable gland.

More information

- Mounting probe head inside DTR502B (page 50)

4.9.1 Installing HMP9 through a cable gland

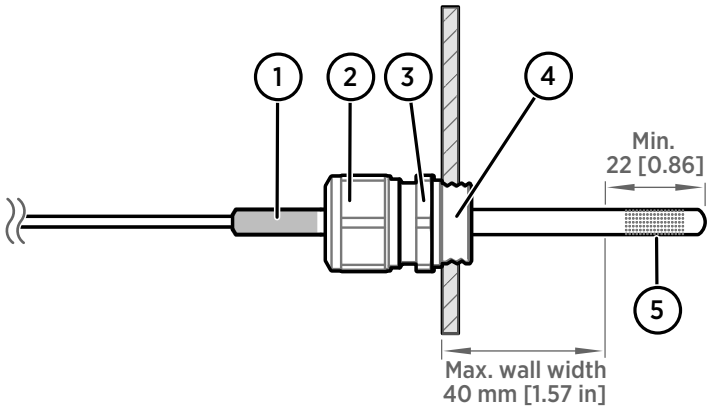

Figure 19 Installing HMP9 probe head through a cable gland

1 Black plastic part of the HMP9 probe head
2 Nut for tightening the probe in place
3 Base of the cable gland
4 M10×1.5 threads of the cable gland
5 Probe filter: a minimum of 22 mm (0.86 in) of the probe head must be inside the process. The holes of the filter must not be covered.

The maximum thickness of the installation surface in cable gland installations is 40 mm (1.57 in).

- M10×1.5 cable gland (included with HMP9 probe)
- Drill with 8.5-mm bit
- M10×1.5 threading tap
- 13-mm wrench

1. Drill a 8.5-mm diameter hole in the installation location.
2. Use a threading tap to create a M10×1.5 thread in the hole.
3. Install the base of the cable gland in the hole and tighten with a 13-mm wrench.
4. Insert the seal of the cable gland in the base and place the nut of the cable gland over the probe head.
5. Insert the probe head in the cable gland up to the black plastic part of the probe head. Leave the black plastic part entirely outside the cable gland. Tighten the cable gland to finger tightness.
6. Tighten the nut of the cable gland with a 13-mm wrench until the probe head stops moving. Do not overtighten.

The cable gland itself has an IP68 rating. The gas or water tightness of the cable gland installation is not guaranteed, as it depends on how the installation as a whole has been carried out and the properties of different gases.

4.9.2 Overview of HMP9 Duct Installation Kit

Duct Installation Kit (Vaisala item ASM214055) is an optional accessory designed to support the probe head of a HMP9 Humidity and Temperature Probe in installations to ducts and chambers. The kit is lightweight and can be installed with minimal tools.

The kit does not include an attachment for the probe body of HMP9. To mount the probe body, use the probe holder supplied with HMP9, or attach it directly to a compatible Indigo transmitter.

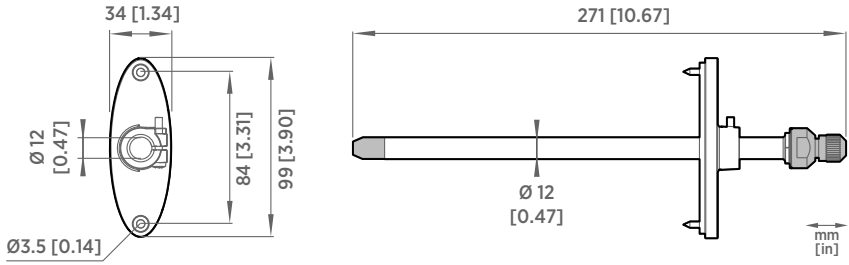

Figure 20 Duct Installation Kit ASM214055 dimensions

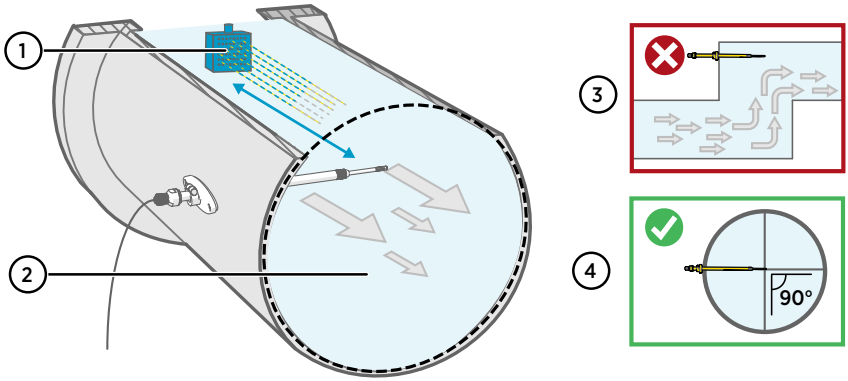

Figure 21 Duct installation overview

1 Make sure there is a minimum clearance of 5 m (16.5 ft) between the probe head and any possible humidifier. Avoid installing in a location where condensation can fall on the probe head inside the duct.
2 Maximum air flow speed: 50 m/s.
3 Avoid installing the probe in dead legs. Supersaturation can occur in areas where there is no air flow.
4 Install the probe head in a 90° angle to prevent condensation from travelling to the sensor along the mounting pipe. Position the sensor as close to the middle of the duct as possible.

4.9.3 Mounting HMP9 probe head with Duct Installation Kit

1. Loosen the sealing gland on the back of the pipe by turning it 1.5 full rotations. Do not detach the gland to avoid dislocating the sealing ring.

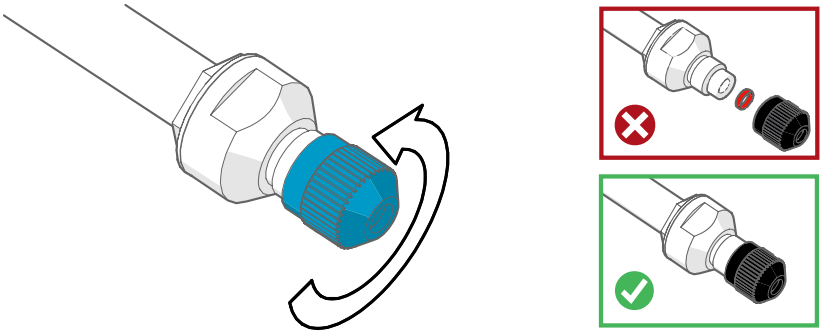

2. Push the probe head of HMP9 firmly through the sealing gland. Push the probe head further using its cable until it appears from the end of the tube. Adjust so that half of the metal probe head is visible, and tighten the sealing gland by hand so that it holds the probe cable in place.

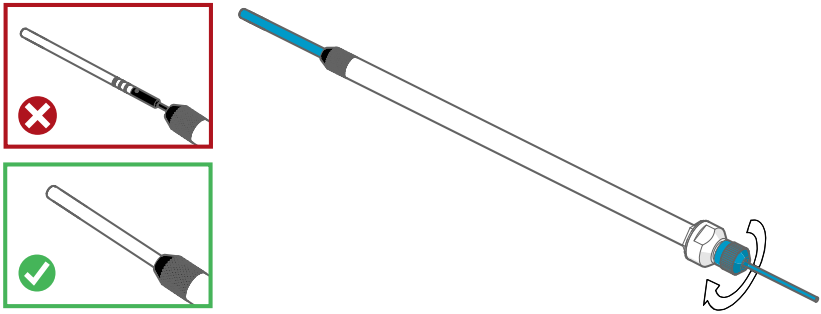

3. Insert the mounting flange on the pipe. Make sure the black sealing surface faces the probe head.
4. Make a Ø 14 mm (0.55 in) hole in the duct or chamber wall.
5. Push the probe head and pipe into the duct or chamber, and attach the flange using the 2 screws. If necessary, use a drill to make starter holes for the screws (max . Ø 2 mm (0.07 in)).
6. Adjust the mounting depth of the probe so that the probe is in the middle of the duct, and tighten the holding screw on the flange to lock the pipe in place.

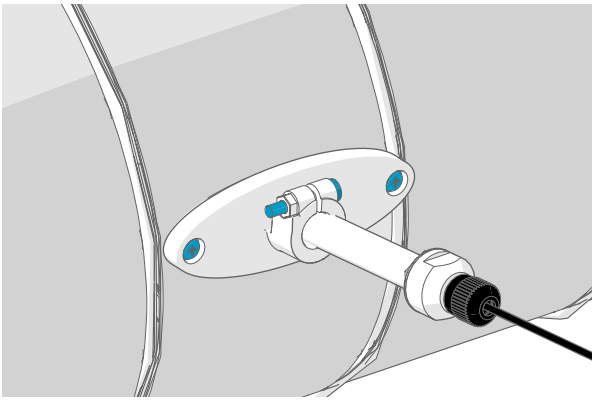

4.10 MMP8 probe

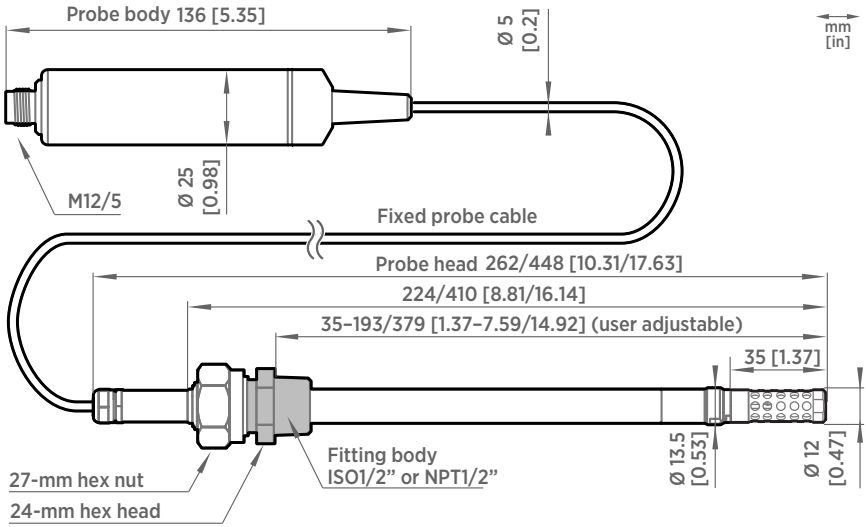

Figure 22 MMP8 dimensions

Vaisala HUMICAP® Moisture in Oil Probe MMP8 enables fast and reliable measurement of moisture in oil. It uses the proven Vaisala HUMICAP® sensor, which was developed for demanding dissolved moisture measurements in transformer and lubrication oils, hydraulic fluids, and other liquids.

MMP8 measures dissolved moisture in oil in terms of water activity (a_w), relative saturation (%RS), and temperature (T). Water activity or relative saturation indicate directly whether there is a risk of free water formation. This data is relevant in lubrication oil applications where detecting water ingress and preventing free water formation is crucial. The measurement is independent of oil type and age.

MMP8 can also output ppm, the average mass concentration of water in oil. Vaisala has this conversion readily available for specific oils, including mineral transformer oil. This allows continuous measurement of ppm concentration in power transformer condition monitoring.

- Temperature measurement range −40 ... +180 °C (−40 ... +356 °F)

When installed with an optional ball valve kit, MMP8 is ideal for installation into processes where the probe needs to be installed or removed while the process is running. MMP8 is available in two different lengths, and the installation depth of the probe is adjustable. Pressure fitting options are ISO 1/2″ and NPT 1/2″. MMP8 is delivered with a manual pressing handle that allows the probe to be pushed against process pressure.

For more information on using the probe with the ball valve, see Ball Valve Kit (BALLVALVE-1) Installation Guide (M212837EN).

4.10.1 Moisture ppm calculation for transformer oils

MMP8 can also output ppm, the average mass concentration of water in oil. Vaisala has this conversion readily available for specific oils, including mineral transformer oil. This allows continuous measurement of ppm concentration in power transformer condition monitoring.

The table below lists the oil solubility coefficients of the oil types that can be used for the MMP8 probe.

Table 4 Oil solubility coefficients for Vaisala moisture in oil products

Oil type	Oil 0 (A)	Oil 1 (B)
Mineral oils (for example, Shell Diala, Nynas Nytro)	-1662.70	7.3694
Midel 7131	-687.54	5.6236
FR3	-684	5.3318
Dow Corning 561	-1248.64	6.5427

After installing the MMP8 probe, configure the coefficients using the Insight PC software or the Indigo80 handheld indicator.

For determining the coefficients using your own apparatus, see Determining Oil-specific Coefficients for Moisture in Oil Probes Technical Note (M212935EN).

4.10.1.1 Configuring coefficients using Insight

After installation, you can configure coefficients for the MMP8 probe using the Insight PC software.

Configuring these settings requires using Insight in **Advanced Mode**.

1. Connect the probe to the Insight software.
2. Select ⚙ and open the **Configure device** menu.
3. Select **Calculation coefficients**.
4. In the **Oil A** and **Oil B** fields, enter the values of the required coefficients.
5. Select **Save**.

More information

- Connecting to Insight software (page 54)

4.10.1.2 Configuring coefficients using Indigo80

After installation, you can configure coefficients for the MMP8 probe using the Indigo80 handheld indicator.

1. Connect the probe(s) to the indicator.
2. Open the indicator main menu by pressing ☰.
3. Select **Devices**. If you have more than one device connected to the indicator, make a further selection between the devices.
4. Select **Settings** to access and change the features available for your probe.
5. Select **Calculation coefficients**.
6. Select **Oil A**, and use the arrow buttons to set the required value.
7. Select **Oil B**, and use the arrow buttons to set the required value.

More information

- Connecting probes to Indigo80 (page 65)

4.11 TMP1 probe

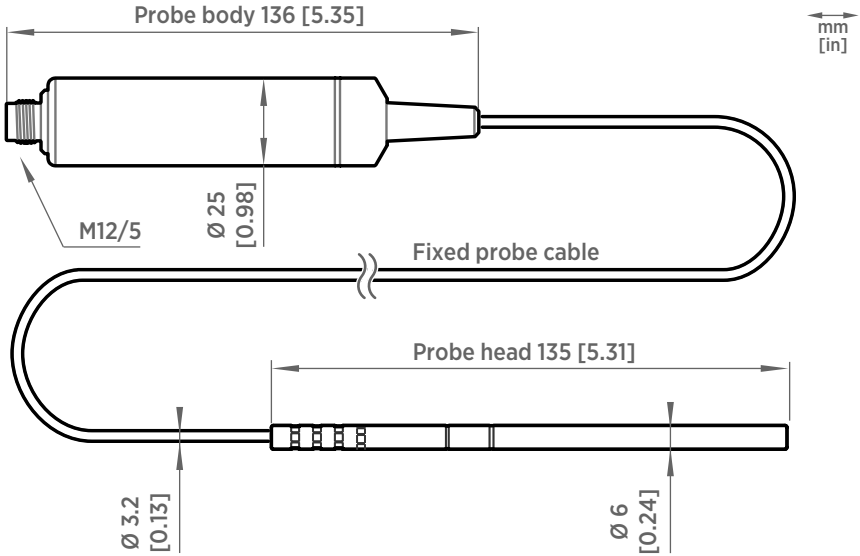

Figure 23 TMP1 probe dimensions

Vaisala Temperature Probe TMP1 is designed for demanding temperature measurements in industrial applications such as pharmaceutical industry and calibration laboratories, where accuracy and robustness are essential.

- Temperature measurement range −70 ... +180 °C (−94 ... +356 °F)
- Operating temperature of probe body −40 ... +80 °C (−40 ... +176 °F)

4.11.1 Duct installation kit for temperature probe

With an optional duct installation kit (Vaisala item 215003) to support the probe head, the probe can be installed to a chamber or duct.

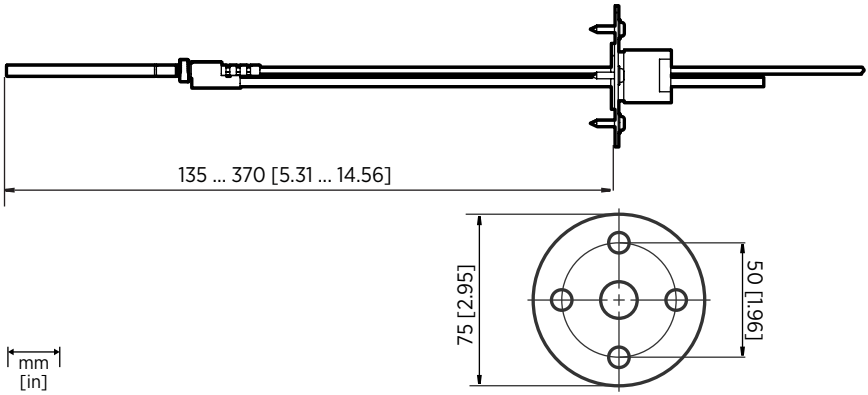

Figure 24 Optional duct kit 215003 dimensions

4.11.2 Pressure-tight Swagelok installation kit

Swagelok installation kit (Vaisala items SWG6ISO18 and SWG6NPT18) is an optional accessory which includes a pressure-tight Swagelok® connector with ISO1/8″ or NPT1/8″ thread.

CAUTION! Note that overtightening the connector may damage the probe head.

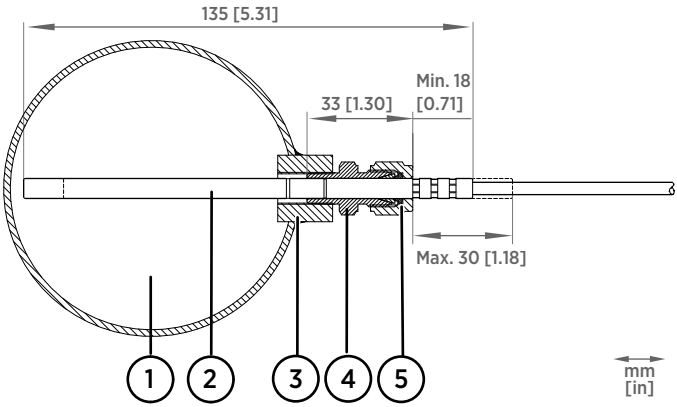

Figure 25 TMP1 installation to pipeline using a Swagelok installation kit

1 Max. process pressure 10 bar (145 psi), max temperature +180 °C (+356 °F)
2 Probe head
3 Duct connector
4 Swagelok connector
5 Ferrules

4.12 DTR502B solar radiation shield

DTR502B protects the sensors on the probe head from solar radiation and precipitation in outdoor installations. It provides excellent ventilation while blocking both direct and reflected solar radiation. The special plastic used in the plates has excellent thermal characteristics, the white outer surface reflects radiation, the black inside absorbs accumulated heat. The shield can be easily installed on either a vertical pole, horizontal beam, or a flat surface.

DTR502B is compatible with the probe heads of HMP3, HMP7 and HMP9 probes. HMP9 requires the use of a special sensor head support (item code 215130) due to the smaller diameter of its probe head.

DTR502B is designed to hold only the **probe head**. The probe body must be separately mounted and protected in outdoor installations. If possible, mount the probe indoors and bring only the probe head outside, into the DTR502B.

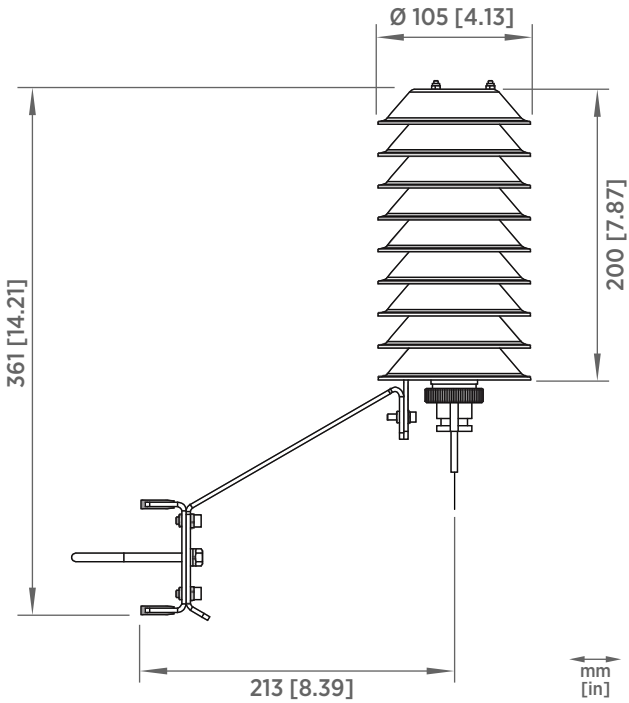

Figure 26 DTR502B dimensions

4.12.1 Mounting probe head inside DTR502B

- 3-mm and 5-mm Allen keys
- Crosshead screwdriver

DTR502B solar radiation shield is compatible with the probe heads of HMP3, HMP7, and HMP9 probes. The sensor head support that is included with the DTR502B is suitable for attaching HMP3 and HMP7 probe heads, but for HMP9 you need an alternate sensor head support (item code 215130).

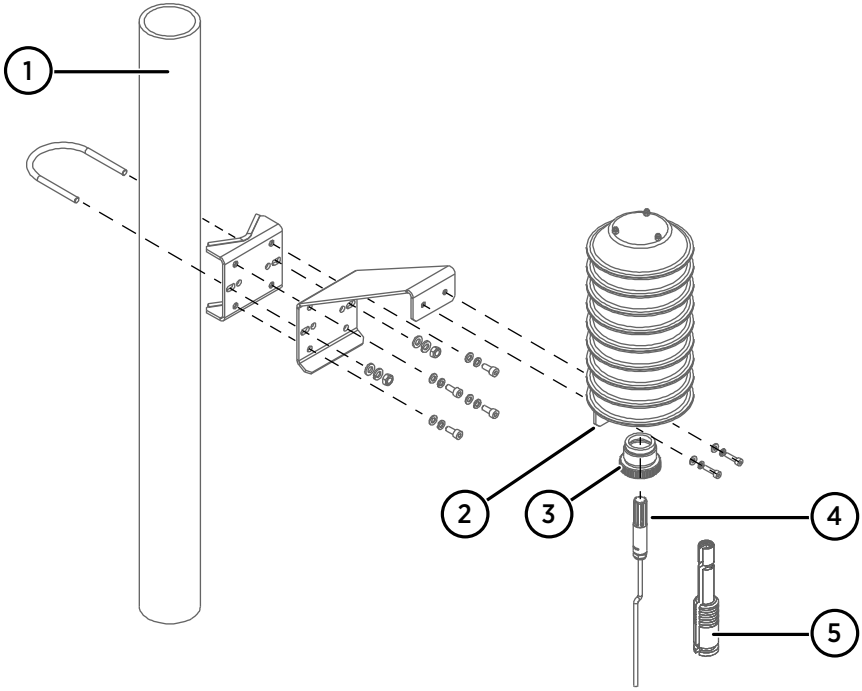

Figure 27 Mounting DTR502B on a pole mast

1 Pole mast with diameter 30–60 mm (1.2–2.3 in)
2 Support plate
3 Fastening ring
4 Probe head
5 Sensor head support

1. Mount the solar radiation shield in the measurement location using the provided mounting accessories, screws, and washers. You can mount the radiation shield to a pole mast as shown in Figure 27 (page 51), or to a horizontal beam directly from its support plate.

2. Attach the probe head to the sensor head support and secure it with a cable tie. The alternate sensor head support (item code 215130) needed with HMP9 is shown in Figure 28 (page 52).

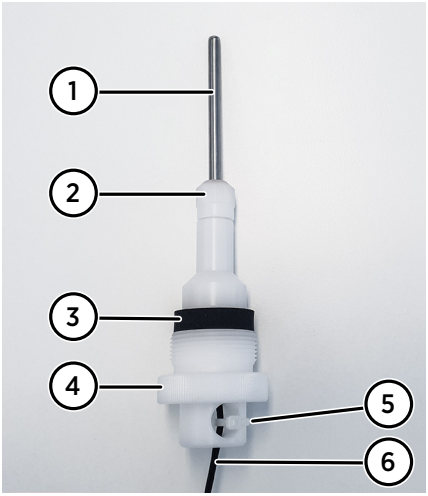

Figure 28 HMP9 probe head with sensor head support 215130

1 HMP9 probe head
2 Mounting nut
3 Sealing ring
4 Fastening ring
5 Cable tie
6 Cable between probe head and probe body

3. Insert the fastening ring and the sealing ring on the probe head.
4. Slide the probe head into the radiation shield and tighten the sealing ring.

4.13 Configuring environmental compensations

After installation, configure the pressure compensation setting, if relevant to your probe and its measurement environment.

For example, when you have installed the probe in a process with a pressure differing from normal atmospheric pressure, update the correct pressure into the pressure compensation setpoint parameter or register of the probe. This allows the probe to apply the appropriate pressure compensation into its measurement results.

You can configure the setting with the Insight software or the Indigo80 handheld indicator, or using the Modbus protocol.

More information

- Environmental compensation (page 22)
- Environmental compensation (page 22)
- Configuring environment settings with Indigo80 handheld indicator (page 68)

5. Configuration with Insight software

5.1 Vaisala Insight software

Vaisala Insight software is a configuration software for Indigo-compatible devices. With the Insight software, you can:

- See probe information and status
- See real-time measurement
- Record data up to 48 hours and export in CSV format
- Configure probe features such as measurement filtering, sensor purge, condensation prevention, and serial communication
- Calibrate and adjust the probe

Microsoft Windows® operating system and Indigo USB adapter (item code USB2) or Vaisala USB cable (item code 242659) required.

Download Vaisala Insight software at www.vaisala.com/insight.

5.2 Connecting to Insight software

- Computer with a Microsoft Windows® operating system (64-bit version) and Vaisala Insight PC software installed
- Indigo USB adapter (item code USB2) or USB connection cable (item code 242659)

CAUTION! When connecting several devices at the same time, note that your computer may not be able to supply enough power through its USB ports. Use an externally powered USB hub that can supply >2 W for each port.

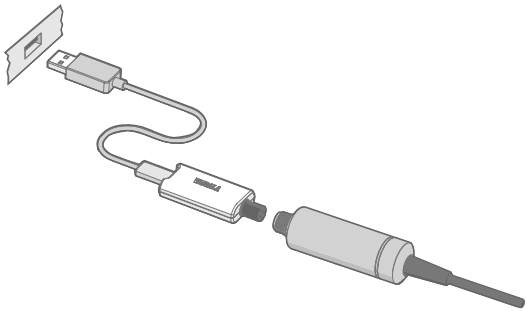

Figure 29 Connecting probe to Insight using Indigo USB adapter

1. Open the Insight software on your computer.
2. Verify the current operating mode of Insight from the **Settings** menu and change it if appropriate:
   - **Basic mode** is suitable for most use cases.
   - **Advanced mode** provides access to additional configuration options. Use **Advanced mode** only when instructed to do so by product documentation or Vaisala technical support.
3. Connect the USB adapter to a free USB port on the computer or USB hub.
4. Connect the probe to the USB adapter.
5. Wait for the Insight software to detect the probe.

5.3 Configuration options

The complete probe configuration is accessible via the Insight software. After connecting the probe, select ⚙ **> Configure device** to access the configuration options.

The available configuration options include all of the Modbus configuration registers and several additional options. If Insight has been set to **Advanced mode**, additional configuration options may be available. Use **Advanced mode** only when instructed to do so by product documentation or Vaisala technical support.

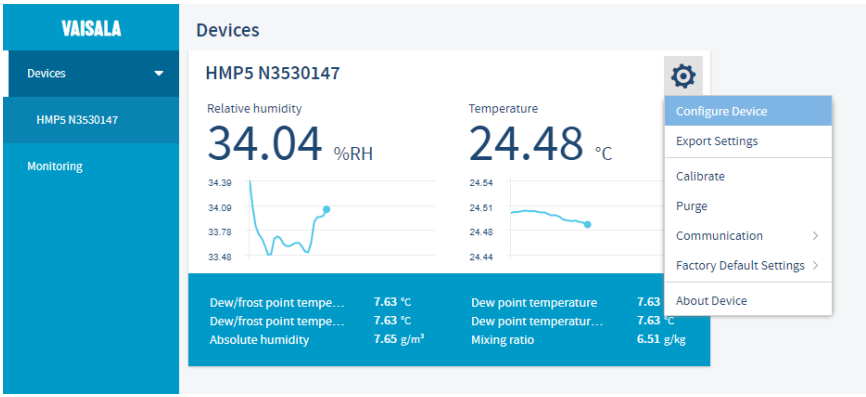

Figure 30 HMP5 in Insight software

5.4 Configuring condensation prevention with Insight

1. Connect the probe to the Insight software.

2. Select ⚙ > **Configure device**.
3. Set the **Condensation prevention on/off** switch to the desired setting.

> The switch is not available if the probe does not support any condensation prevention heating features, or if the probe firmware version is older than 1.2.0. Probes with older firmware versions will show configuration switches for individual condensation prevention features as applicable.

More information

- Connecting to Insight software (page 54)
- Condensation prevention functions (page 21)

5.5 Diagnostics in Insight

Messages sent by the connected devices are shown automatically in Insight. Additional diagnostic data is available on the **Diagnostics** page. The data available depends on the probe model and Insight operating mode (basic or advanced). The data can be very useful when diagnosing issues together with Vaisala support, particularly the diagnostic files.

Diagnostic files

If Insight is in **Advanced mode**, you can retrieve the following diagnostic files from the connected probe:

- **SSR/T_s histogram**: Table of humidity and temperature conditions measured by the probe
- **Error log**: Cumulative total of the error and status events tracked by the probe
- **Autocalibration log**: Table of diagnostic data related to autocalibration tracked by the probe

The files contain data from since the probe was manufactured, or since the files were last cleared. Clearing the files is not recommended unless instructed by Vaisala support. The buttons to clear the files are located at the bottom of the **Diagnostics** page.

The files are in comma separated value (CSV) format. They can be opened for viewing in spreadsheet programs such as Microsoft Excel or in text editors.

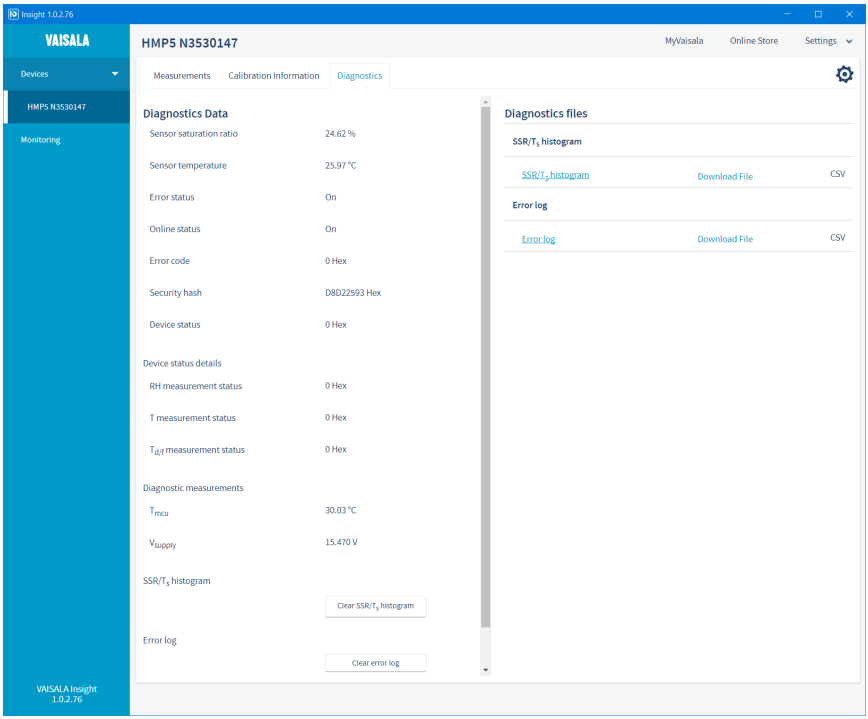

Figure 31 HMP5 diagnostics in Insight (advanced mode)

6. Using probe with Indigo transmitters

Indigo transmitters are host devices that extend the feature set of connected probes with a range of additional options for outputs, configuration access, measurement viewing, and status monitoring.

Available features vary depending on the transmitter model. Models without display use a LED indicator for notifications.

For more information on the features of the different Indigo transmitter models, see www.vaisala.com/indigo.

For instructions on installing and configuring Indigo transmitters, see the applicable Indigo transmitter user documentation available at the Vaisala documentation portal docs.vaisala.com.

6.1 Connecting probe to Indigo200 series transmitters

Indigo200 series transmitters have a probe connector where compatible probes can be attached directly. A cable may also be used to connect the probe. Cables are available to order at store.vaisala.com.

CAUTION! The IP classification of probes is valid only when the probes are connected to the probe connection cable, or to the cable connector inside the locking wheel of the transmitter.

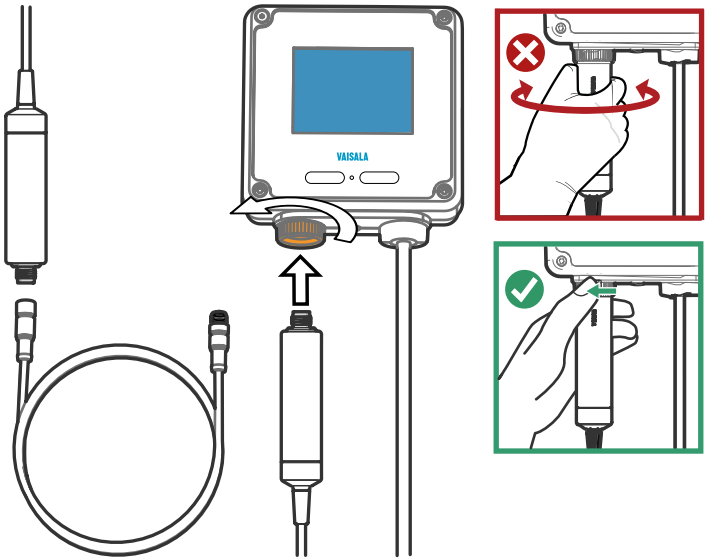

Figure 32 Connecting probe to Indigo200 series transmitter

1. Insert the probe or the cable into the transmitter's connector. Using a cable is recommended for strain relief.
2. Turn the locking wheel of the transmitter to lock the probe or cable in place. **Do not turn the probe or the cable itself**, as that will damage the connectors.
3. If you are using a cable, connect the probe to the cable.
4. When the transmitter recognizes the connected probe, it shows a notification message on the display.

6.2 Connecting probe to Indigo300 transmitter

Indigo300 transmitters have a probe connector where compatible probes can be attached directly. A cable may also be used to connect the probe. Cables are available to order at store.vaisala.com.

CAUTION! The IP classification of probes is valid only when the probes are connected to the probe connection cable, or to the cable connector inside the locking wheel of the transmitter.

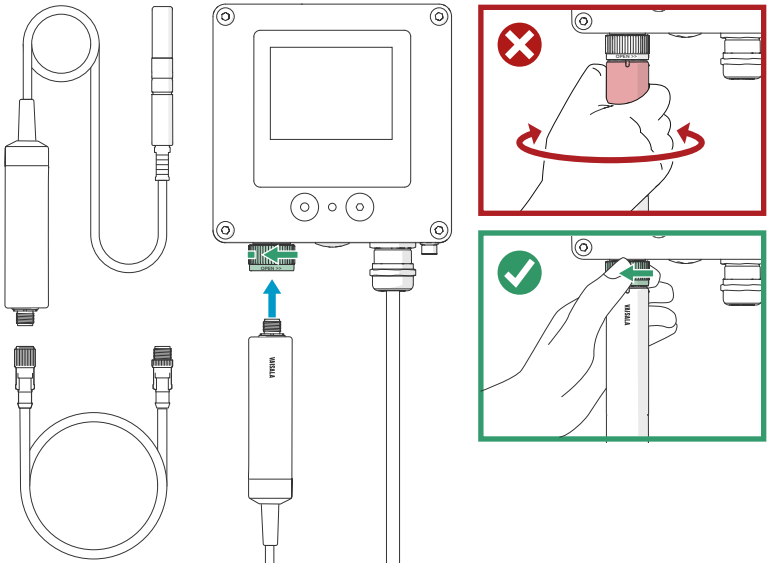

Figure 33 Connecting probe to Indigo300 transmitter

1. Insert the probe or the cable into the transmitter's connector.
2. Turn the locking wheel of the transmitter to lock the probe or cable in place. **Do not turn the probe or the cable itself**, as that will damage the connectors.
3. If you are using a cable, connect the probe to the cable.
4. When the transmitter recognizes the connected probe, it shows a notification message on the display.

6.3 Connecting probes to Indigo500 series transmitters

CAUTION! The IP classification of probes is valid only when the probes are connected to the probe connection cable.

If your transmitter was delivered with preconfigured analog outputs, make sure that you connect the measurement devices accordingly.

Probes are connected to Indigo500 series transmitters using a cable. Connections are made to the screw terminals inside the housing. The Indigo520 model allows 2 probes to be connected. After connecting a probe, use the touchscreen interface or the web user interface to configure the transmitter.

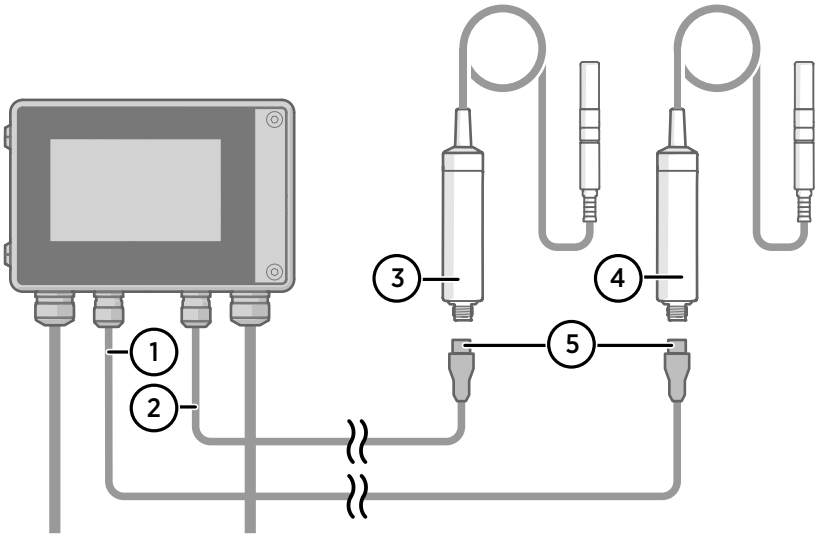

Figure 34 Connecting probes to Indigo500 transmitter

1 Probe connection cable for probe 1
2 Probe connection cable for probe 2 (dual-device support in Indigo520)
3 Probe to be connected as probe 2 (GMP252 example)
4 Probe to be connected as probe 1 (HMP7 example)
5 Probe cable connector (M12 5-pin A-coded female)

6.4 Default analog output configuration with Indigo transmitters

When you connect the probe to an Indigo200 or Indigo300 transmitter for the first time, the following analog output values per output parameter are active by default, unless you have ordered the transmitter with preconfigured analog outputs.

Table 5 Default analog output configuration per output parameter

Output parameter	Output unit	AOUT min	AOUT max
Absolute humidity	g/m^3	0	600
Absolute humidity at NTP	g/m^3	0	600

Output parameter	Output unit	AOUT min	AOUT max
Dew/frost point temperature	°C	−80	100
Dew/frost point temperature at 1 atm	°C	−80	100
Dew point temperature	°C	−80	100
Dew point temperature at 1 atm	°C	−80	100
Dew/frost point depression	°C	−10	50
Enthalpy	kJ/kg	−40	1500
Mixing ratio	g/kg	0	500
Relative humidity	%RH	0	100
Relative humidity (dew/frost)	%RH	0	100
Relative saturation	%RS	0	100
Temperature	°C	−40	60
Water activity	-	0	1
Water concentration	ppm_v	0	1 000 000
Water concentration in oil	ppm_w	0	1 000 000
Water concentration (wet basis)	vol-%	0	100
Water mass fraction	ppm_w	0	1 000 000
Wet-bulb temperature	°C	0	100
Water vapor pressure	hPa	0	1000
Water vapor saturation pressure	hPa	0	1000

7. Using probe with Indigo80 handheld indicator

7.1 Indigo80 handheld indicator

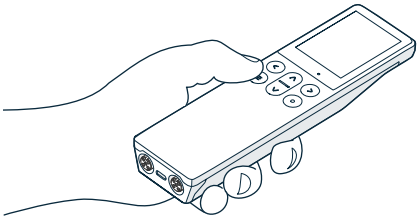

Figure 35 Indigo80 handheld indicator

Vaisala Indigo80 Handheld Indicator is a portable diagnostics tool that accommodates up to two compatible Vaisala devices for measuring a wide range of parameters.

With the indicator, you can:

- See real-time measurements and device and status information
- Log measurement data
- Calibrate and adjust the probe
- Configure probe features and settings such as condensation prevention, compensation setpoints, sensor purge, filtering factor, and serial communication. The available features and settings depend on the probe model and firmware version.
- Enable temperature compensation from another probe. For example, you can enable TMP1 to function as the temperature source for HMP7.

Accessing certain configuration options for your probe is possible only using the free Insight PC software, downloadable at vaisala.com/insight.

The help tours in the indicator's user interface guide you through the key features of the indicator. You can access the tours in the **Help** menu by pressing the ☰ button.

For more information on using the indicator, for example, editing the measurement views and performing data logging, see Indigo80 User Guide (M212722EN).

More information

- Configuring probe features with Indigo80 handheld indicator (page 67)
- Configuring environment settings with Indigo80 handheld indicator (page 68)
- Calibration and adjustment with Indigo80 handheld indicator (page 77)

7.1.1 Probe compatibility

The Indigo80 handheld indicator is tested for compatibility with probes that have firmware version 1.2.5 or newer.

Probes with older firmware versions may have limited compatibility with the indicator.

For the most up-to-date version compatibility information, see Firmware version compatibility of Indigo80-compatible devices Technical Note (M212901EN).

7.1.2 Indigo80 keypad

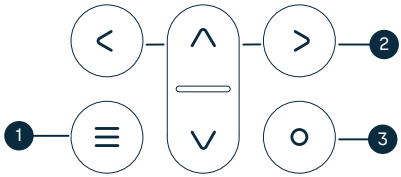

Figure 36 Indigo80 keypad

1 Power on/off and main menu button
2 Arrow buttons for navigating menus and scrolling views
3 Select button for selecting items in the user interface

7.1.3 Indigo80 main menu

Pressing the button while navigating the Indigo80 menus and views opens the main menu.

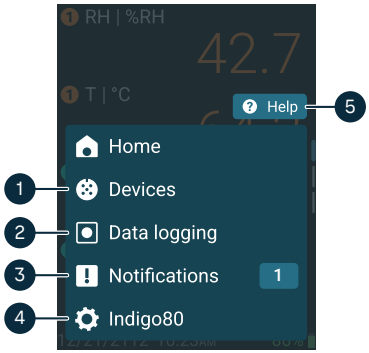

Figure 37 Indigo80 main menu

1 **Devices** menu contains, for example, options related to sensor purge, calibration, and environment settings (depending on the connected device).
2 **Data logging** menu for setting logging interval and duration, and browsing data files.
3 **Notifications** menu displays notifications related to Indigo80 and the connected devices.
4 **Indigo80** menu for changing the settings of Indigo80 (for example, date, time, and language) and viewing device information.
5 **Help** menu contains tours showing the key features of Indigo80, as well as instructions for sending devices to Vaisala for calibration and maintenance.

7.2 Connecting probes to Indigo80

- Probe connection cable (M12-M12, Vaisala item code 272075SP)

Up to two Vaisala Indigo-compatible measurement devices can be connected to the ports located on the bottom of Indigo80. You can connect and disconnect devices both when the indicator is powered on and when it is off.

Vaisala recommends using cables provided by Vaisala when connecting devices to the indicator. Cables and other accessories are available to order at store.vaisala.com.

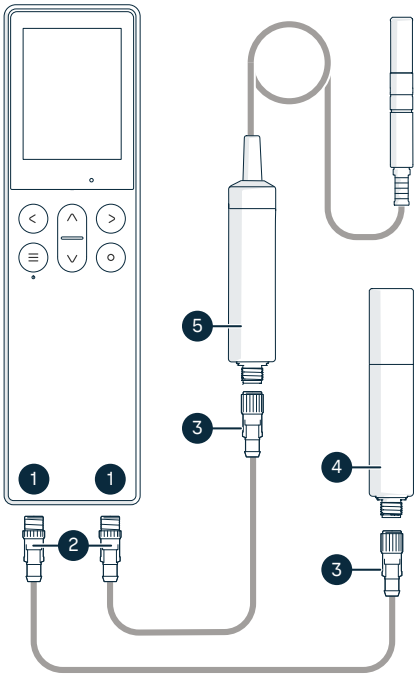

Figure 38 Example of connecting probes to Indigo80

1. M12-5F ports on the bottom of Indigo80 for connecting compatible Vaisala devices. Ports are labeled ❶ (left) and ❷ (right) on Indigo80.
2. M12-5M cable connector
3. M12-5F cable connector
4. Probe displayed as ❶ by Indigo80 (GMP252 shown)
5. Probe displayed as ❷ by Indigo80 (HMP7 shown)

1. If the indicator is powered and no devices are connected to it, the text **Please connect a measurement device** will be shown on the display.

2. Insert the probe connection cable in one of the ports on the bottom of the indicator.

   - **Note the orientation of the cable connector when inserting it**
   - **Hold the connector in place while turning its locking ring clockwise – never twist the connector body!**

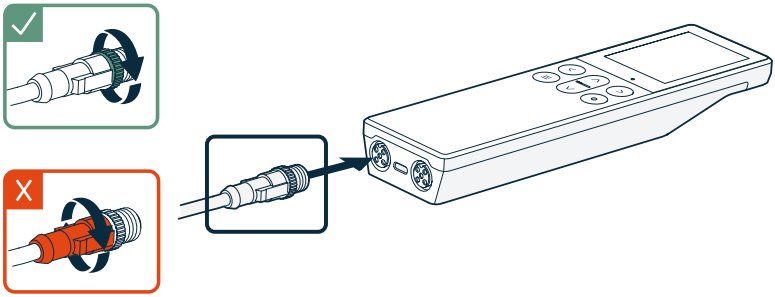

3. Connect the probe to the M12-5F end of the probe connection cable.

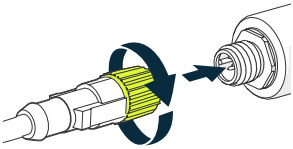

   When the indicator recognizes the connected probe, it shows a notification on the display. A probe connected to the leftmost port in the indicator is labeled ❶ on the indicator's display, while the probe in the rightmost port is labeled ❷.

4. To change probes, simply detach the cable from the probe and connect a new probe.

For optimal measurement accuracy, the indicator guides you to check the connected probe's environment settings next.

More information

- Configuring environment settings with Indigo80 handheld indicator (page 68)

7.3 Configuring probe features with Indigo80 handheld indicator

- Probe connection cable (M12-M12, Vaisala item code 272075SP)

You can use the Indigo80 handheld indicator to configure probe features such as compensation setpoints, filtering factor, and serial communication. The available features depend on the probe model and firmware version.

Accessing certain configuration options for your probe is possible only using the free Insight PC software, downloadable at vaisala.com/insight.

1. Connect the probe(s) to the indicator.
2. Open the indicator main menu by pressing ☰.
3. Select **Devices**. If you have more than one device connected to the indicator, make a further selection between the devices.
4. Select **Settings** to access and change the features available for your probe.
5. Exit the menu by pressing ⮜ or return to the main menu by pressing ☰.

More information

- Sensor purge (page 20)
- Condensation prevention functions (page 21)
- Environmental compensation (page 22)
- Filtering factor (page 23)

7.3.1 Example of configuring filtering factor with Indigo80 handheld indicator

- Probe connection cable (M12-M12, Vaisala item code 272075SP)

The filtering factor allows averaging the output if the measuring environment produces occasional exceptionally high or low readings.

This example shows how to configure the filtering factor as **0.9** using the Indigo80 handheld indicator.

This means that the new measurement output is a combination of the latest measurement (90 %) and the previous measurement (10 %).

1. Connect the probe(s) to the indicator.
2. Open the indicator main menu by pressing ☰.
3. Select **Devices**. If you have more than one device connected to the indicator, make a further selection between the devices.
4. Select **Settings > Filtering**.
5. Select **Filtering factor**.
   a. Use the arrow buttons to set the value as **0.9**.
   b. Select **Set**.
6. Select **Extended filtering on/off > On** to enable measurement filtering using the filtering factor defined in the previous step.
7. Exit the menu by pressing ⮜ or return to the main menu by pressing ☰.

More information

- Filtering factor (page 23)

7.4 Configuring environment settings with Indigo80 handheld indicator

- Probe connection cable (M12-M12, Vaisala item code 272075SP)

For optimal measurement accuracy, you can use the Indigo80 handheld indicator to give additional information about the connected probe's measurement environment.

For example, you can:

- Configure the pressure compensation setting for your probe
- Enable temperature compensation from another Indigo-compatible probe that has a temperature output. For example, you can enable TMP1 to function as the temperature source for HMP7.

The environment settings available through Indigo80 correspond to the environmental compensation settings of the probe. Therefore, **Environment settings** and **Settings > Compensation setpoints** are interconnected: the configuration set in either menu is applied to both.

1. Connect the probe(s) to the indicator.
2. Open the indicator main menu by pressing ☰.
3. Select **Devices**. If you have more than one device connected to the indicator, make a further selection between the devices.

4. Select **Environment settings** to access the settings for your probe.

   The available environment settings depend on the probe and probe firmware version.

   Pressure
   Value for pressure compensation. The entered value is persistent and remains unchanged at device restart.

   Temperature
   This setting allows the probe to use a temperature reading from another device instead of its own temperature reading. An external temperature source is needed when condensation prevention functions of the probe are active, as they will also heat the temperature sensor of the device. Indigo80 can link a temperature measurement from another probe to this setting and update it in real time.

   > Some probe firmware versions may allow a value to be entered manually. This is not recommended as the value must correspond to the temperature of the measurement environment as accurately as possible.

   A manually entered value is cleared at device reset. A value read from another probe is persistent: when you disconnect and then reconnect the same probes to the same ports in Indigo80, Indigo80 will continue reading the temperature value from the previously selected probe. The same applies also when you restart Indigo80 with the same probes connected.

5. Select a setting from the list, for example, **Pressure**.

   a. Select the unit, if prompted.

   b. Use the arrow buttons to set the desired value, and then select **OK** or **Set**.

   You can also select to read the value from another probe connected to the indicator, provided that the probe can output the required compensation parameter. Press ⊂ to highlight the **Read value from** field, and then press ⊙ to select the other probe as the source of the value.

   > For **Temperature**, always set the temperature value to be read from another probe. Do not set the temperature value manually. Make sure that both probes are in the same environment to get the most accurate measurement values.

6. Exit the menu by pressing ⊂ or return to the main menu by pressing ☰.

More information

- Pressure compensation (page 22)
- Temperature compensation (page 22)
- Example of enabling temperature compensation with Indigo80 handheld indicator (HMP7 and TMP1) (page 70)

7.4.1 Example of enabling temperature compensation with Indigo80 handheld indicator (HMP7 and TMP1)

- Probe connection cable (2 pcs)

The temperature-dependent output parameters of the HMP7 humidity and temperature probe are unavailable when the probe heating function of HMP7 is active. Therefore the temperature measurement data needs to be provided from an external source, which can be, for example, any Indigo-compatible probe with a temperature output. With HMP7 and TMP1 connected to the Indigo80 handheld indicator, you can enable TMP1 to function as the temperature source for HMP7.

Make sure that both probes are in the same environment to get the most accurate measurement values.

1. Connect the probe(s) to Indigo80 in any order.

   In this example, TMP1 is connected to port 1 of the indicator, and HMP7 to port 2.
2. Open the indicator main menu by pressing ☰.
3. Select **Devices > HMP7**.
4. Select **Environment settings > Temperature**.
5. Select **Read from device > TMP1**.

   The temperature value read from TMP1 is now shown in the **Environment settings** of HMP7.

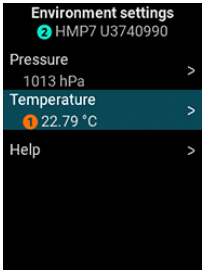

   To stop reading the temperature value from TMP1, select **HMP7 > Environment settings > Temperature > Stop reading**.
6. Exit the menu by pressing ⟨ or return to the main menu by pressing ☰.

When you disconnect and then reconnect the same probes to the same ports in Indigo80, Indigo80 will continue reading the temperature value from the previously selected probe. The same applies also when you restart Indigo80 with the same probes connected.

More information

- Temperature compensation (page 22)

8. Calibration and adjustment

8.1 Calibration and adjustment overview

Calibration means comparing the measurement output of the device to a known reference, such as a known environment in a calibration chamber or the output of a reference instrument. Correcting the reading of the device so that it measures accurately is referred to as **adjustment**.

The probe is fully calibrated and adjusted as shipped from the factory, and a calibration reminder with a 12-month interval is activated in the probe. To maintain the accuracy of the measurement, calibrate and adjust the probe as indicated by the calibration reminder, or as needed. Typical calibration interval is one year, but depending on the application it may be necessary to check the accuracy more frequently.

Vaisala recommends sending the probe regularly to Vaisala for factory calibration. The probe is calibrated and adjusted at multiple points along its measurement range. Factory calibration always includes a traceable calibration certificate and adjustment, if needed.

Factory calibration leads to highest accuracy and lowest uncertainty. After factory calibration the instrument performs as new. For up-to-date information about calibration points and offering, visit store.vaisala.com.

WARNING! When returning a product for calibration or repair, make sure it has not been exposed to dangerous contamination, and is safe to handle without special precautions.

It is also possible to calibrate and adjust the probe on the field using the Insight PC software, the Indigo80 handheld indicator, or via an Indigo transmitter that is connected to Insight or Indigo80. You can also modify the probe's calibration interval and reminder using the above-mentioned tools.

If you think the device is not measuring correctly, calibration and adjustment is not the first thing to do. Check the following first:

- Make sure nothing is interfering with the measurement: heat sources, temperature differences, or condensation.
- Check that there is no moisture on the probe. If the sensor has become wet, wait for it to dry.
- Always wait for the measurement to stabilize.

8.2 Adjustment points and requirements

You can adjust the humidity measurement in 1 ... 5 points and temperature measurement in 1...2 points, depending on the device that you use for the adjustment. Note the following:

- Humidity adjustment in more than 2 points is only available when you use the Insight software in **Advanced Mode**.
- If you are adjusting in more than one humidity point, make sure the first two points are at least 10 %RH apart.
- The probe will reject adjustments that are too large, that is, greater than 10 %RH for humidity and 0.5 °C for temperature. If the probe appears to need such a large correction, perform a sensor purge and repeat the adjustment procedure. Make sure that the measurement has stabilized and the reference environment is reliable. If the required adjustment is still too large, the probe needs to be serviced by Vaisala.

When adjustment of humidity measurement is necessary, Vaisala recommends adjusting in two points, 11 %RH and 75 %RH. These humidities can be produced using Vaisala HMK15 Humidity Calibrator.
Adjustment of temperature measurement is typically not necessary.

8.3 HMK15 Humidity Calibrator with HMP Series probes

Vaisala HMK15 Humidity Calibrator is a suitable humidity reference for HMP Series probes. When preparing the salt solutions and using the calibrator, follow the general instructions in the *HMK15 User Guide (M210185EN)* to avoid common sources of calibration error.

HMK15 with HMP3, HMP4, HMP5, HMP7, and HMP8 probes

Before inserting the probe head in the salt jar, remove the filter and inspect the sensor element. If the leg pins of the sensor are longer than 7 mm (0.28 in), attach the 211302SP calibration adapter. This prevents the sensor from being submerged in the salt solution. Composite sensors typically have long leg pins.

211302SP is the longer of the two adapters included with HMK15. With this adapter attached, use the 13.5 mm hole on the salt jar cover.

Figure 39 HMP5 calibration with HMK15 using 211302SP adapter

12 mm (0.47 in) diameter probes where the leg pins are shorter than 7 mm can be inserted in the salt jar without an adapter. Note that you can still use the 218377SP calibration adapter to fit a 12 mm probe in the 13.5 mm hole. This allows you to have multiple probes inserted in a salt jar at one time.

CAUTION! Sensors on the probe head are vulnerable to damage when the filter is removed. Handle the probe carefully and avoid touching the sensors.

HMK15 with HMP1 and HMP9

HMP9 calibration adapter for HMK15 (item code ASM213801) is required to fit the HMP9 probe head to the 12 mm hole on the HMK15 salt jar.

Figure 40 Using HMP9 calibration adapter with HMK15

The same adapter does mechanically fit the HMP1 as well. However, use of HMK15 with HMP1 is not recommended due to additional temperature error caused by heat conduction from the electronics of the probe body. HMP1 should be calibrated so that the entire device is in the calibration environment, not just the probe head. Vaisala's calibration service is a good option for maintaining the accuracy of HMP1.

You can use HMK15 with HMP1 and achieve an accurate calibration if the probe is unpowered during stabilization. This is typically only practical for 1-point calibration.

8.4 Adjusting measurement with Insight software

- Computer with a Microsoft Windows® operating system (64-bit version) and Vaisala Insight PC software installed
- Indigo USB adapter (item code USB2) or USB connection cable (item code 242659)
- Reference environment(s) for producing the desired humidity and/or temperature

This procedure can be used to adjust the probe's humidity or temperature measurement. If you want to adjust both, repeat the procedure.

Because stabilization of temperature and humidity takes time, you should expect the adjustment procedure to take at least 30 minutes for each adjustment point.

1. Connect the probe to the Insight software.
2. If you intend to adjust humidity measurement, first select **> Sensor purge** to perform sensor purge to condition the sensor. Wait a few minutes for purge to complete.
3. Select **> Calibrate > Yes** to switch the probe to calibration mode.

   In calibration mode, the device will not use functions that may interfere with calibration and adjustment.
4. Select the type of adjustment to perform: **RH adjustment** or **T adjustment**.
5. Define the needed adjustment for the first measurement point:
   a. Insert the probe head in the reference environment for the first calibration point.
   b. Wait for the measurement to stabilize fully. This may take more than 30 minutes. Monitor the readings to see when both the RH and temperature measurements have stabilized.
   c. Click the **Reference value, point 1** text box and enter the reference value of the calibration point. Press **ENTER** or click outside the text box when done.
   d. The probe automatically enters the measured values for the calibration point.
6. If you want to adjust in more than one point, repeat the previous step for all desired calibration points.

You can adjust humidity measurement in up to five points when Insight is set to **Advanced mode**.

7. Check the difference between each reference and measured value. Very large differences may be due to insufficient stabilization time or unsuitable calibration setup.
   - To save the adjustment into the device, select **Activate adjustment**.
   - To exit without taking the adjustment in use, select **Close**.
8. Check the message that appears at the top of the screen. If the message indicates that the adjustment is activated successfully, your adjustment is stored in the probe.
9. Select the **Calibration information** tab and update the **Calibration date** and **Calibration text**.
10. Select **Close** to exit the calibration mode.

More information

- Connecting to Insight software (page 54)
- Adjustment points and requirements (page 72)

8.5 Adjusting measurement with Indigo transmitter

- Reference environment(s) for producing the desired humidity and/or temperature
- Computer with a Microsoft Windows® operating system (64-bit version), Vaisala Insight PC software, and Vaisala USB Device driver installed
- For Indigo200 series transmitters: USB cable with a USB-C (type C to A or type C to C) connector (available as an accessory, a generic cable can also be used)
- For Indigo300 transmitter: M12 - M8 service cable (Vaisala item code 262195)

This procedure can be used to adjust the humidity or temperature measurement of a probe connected to an Indigo200 or Indigo300 transmitter, when the transmitter is connected to the Insight PC software.

Because stabilization of temperature and humidity takes time, you should expect the adjustment procedure to take at least 30 minutes for each adjustment point.

Indigo200 transmitters manufactured before 2022 have a wireless configuration interface for adjusting measurements. For more information, see version G of HMP Series with MMP8 and TMP1 User Guide (M212022EN).

1. Connect the transmitter to the Insight software.

   The transmitter has a port on the lower right corner of the front panel.
2. If you intend to adjust humidity measurement, first select ⚙ **> Sensor purge** to perform sensor purge to condition the sensor. Wait a few minutes for purge to complete.

3. Select ⚙ **> Calibrate > Yes** to switch the probe to calibration mode.

   In calibration mode, the device will not use functions that may interfere with calibration and adjustment.
4. Select the type of adjustment to perform: **RH adjustment** or **T adjustment**.
5. Define the needed adjustment for the first measurement point:
   a. Insert the probe head in the reference environment for the first calibration point.
   b. Wait for the measurement to stabilize fully. This may take more than 30 minutes. Monitor the readings to see when both the RH and temperature measurements have stabilized.
   c. Click the **Reference value, point 1** text box and enter the reference value of the calibration point. Press **ENTER** or click outside the text box when done.
   d. The probe automatically enters the measured values for the calibration point.
6. If you want to adjust in more than one point, repeat the previous step for all desired calibration points.

   You can adjust humidity measurement in up to five points when Insight is set to **Advanced mode**.

7. Check the difference between each reference and measured value. Very large differences may be due to insufficient stabilization time or unsuitable calibration setup.
   - To save the adjustment into the device, select **Activate adjustment**.
   - To exit without taking the adjustment in use, select **Close**.
8. Check the message that appears at the top of the screen. If the message indicates that the adjustment is activated successfully, your adjustment is stored in the probe.
9. Select the **Calibration information** tab and update the **Calibration date** and **Calibration text**.
10. Select **Close** to exit the calibration mode.

More information

‣ Adjustment points and requirements (page 72)

8.6 Calibration and adjustment with Indigo80 handheld indicator

The Indigo80 handheld indicator provides two ways to calibrate and adjust measurements for probes: **Guided calibration** and **Manual adjustment**.

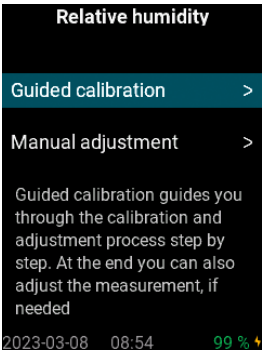

Figure 41 Indigo80 calibration methods for probes

- Choose **Guided calibration** when you have a reference environment or a calibrated reference instrument and want the indicator to guide you through the calibration process step by step. At the end you can also adjust the measurement, if needed.
- Choose **Manual adjustment** if you already have previously collected calibration readings (for example, from a calibration certificate) for 1 or 2 calibration points and want to adjust the probe to correct the observed errors. No separate reference instrument or reference environment is needed during the manual adjustment procedure. For all other use cases, **Guided calibration** is recommended.

8.6.1 Performing guided calibration with Indigo80 handheld indicator

- Probe connection cable (M12-M12, Vaisala item code 272075SP)
- Reference environment(s) or reference instruments for producing the desired reference values

In guided calibration, the indicator guides you through the calibration process step by step. At the end, you can also adjust the measurement, if needed.

You can choose to do either 1-point or 2-point calibration, and choose to use the reference environment or instrument of your choice, for example, another probe connected to your indicator.

For relative humidity, you can choose to use Vaisala HMK15 Humidity Calibrator. For more information on HMK15, see HMK15 User Guide (M210185EN).

Guided calibration using a reference environment, including purge and stabilization time, typically takes 1 to 2 hours depending on the number of calibration points.

Before you start, familiarize yourself with information on adjustment points and requirements for your probe.

1. Connect the probe(s) to the indicator.
2. If your probe supports the sensor purge feature, wait for the start-up purge to finish.

3. Open the indicator main menu by pressing ☰.
4. Select **Devices**. If you have more than one device connected to the indicator, make a further selection between the devices.
5. Select **Calibrate / Adjust**.
6. Acknowledge the notification by pressing **OK**.
7. Select the type of calibration or adjustment to perform, for example, **RH adjustment**.
8. Select **Guided calibration**.
9. In **Calibration points**, select the number of calibration points: **1 point** or **2 points**.
10. In **Reference**, select the desired reference environment(s) or reference instrument(s).

    Selection **Other reference** allows you to use any reference environment(s) of your choice. For 2-point calibration of relative humidity, you can select two salts from the list, one for each calibration point.
    When you have selected the reference environments for 2-point calibration, press < to get back to the previous view.
11. Select **Start calibration**.

    The indicator guides you through the calibration process from this point onwards. Press > to proceed from one view to another.

More information

- Connecting probes to Indigo80 (page 65)
- Adjustment points and requirements (page 72)
- HMK15 Humidity Calibrator with HMP Series probes (page 73)

8.6.2 Performing manual adjustment with Indigo80 handheld indicator using previously measured values

- Probe connection cable (M12-M12, Vaisala item code 272075SP)
- Previously collected calibration readings, for example, a calibration certificate

This procedure tells you how to use the Indigo80 handheld indicator to adjust the probe's measurement in 1–2 points when you have a list of previously collected calibration readings available (for example, in a calibration certificate from a third party laboratory calibration). You can adjust the probe without having to generate the calibration conditions and wait for stabilization.

Both RH and T can be adjusted using previously measured values.

Before you start, familiarize yourself with information on adjustment points and requirements for your probe.

If you adjust the probe using previously measured values, the device readings will be corrected and **your previous calibration certificate will not be valid anymore**. If an up-to-date calibration certificate is still needed, you must perform the calibration again to detect any remaining measurement error after the adjustment.

1. Connect the probe(s) to the indicator.
2. Open the indicator main menu by pressing ☰.
3. Select **Devices**. If you have more than one device connected to the indicator, make a further selection between the devices.
4. If your probe supports the sensor purge feature, wait for the start-up purge to finish or start the purge manually by selecting **Devices > <your device> > Sensor purge**.

   After the purge has been completed, continue to the next step.
5. Select **Calibrate / Adjust**.
6. Acknowledge the notification by pressing **OK**.
7. Select the type of calibration or adjustment to perform, for example, **RH adjustment**.
8. If you have **two probes** connected to the indicator:
   a. Select **Manual adjustment**.
   b. Scroll down and acknowledge the notification by pressing **OK**.
   c. The options **Read from device** and **Enter manually** will be visible at this point. Select **Enter manually**.

      Should you need to read the reference value from another device connected to Indigo80, Vaisala recommends accessing this functionality from the **Guided calibration** menu of Indigo80.
9. If you have **one probe** connected to the indicator:
   a. Select **Manual adjustment**.
   b. Scroll down and acknowledge the notification by pressing **OK**.
10. Select **Reference value, point 1**.
11. Use the arrow buttons to set the reference value (for example, the reference humidity from your calibration certificate), and then select **OK** or **Set**.
12. Scroll down and select the **Measured value, point 1** field. Replace the automatically inserted value with your previously measured calibration reading (for example, the observed humidity value from your calibration certificate).
13. Scroll down and select the **Measured temperature, point 1** field. Select the correct unit, then replace the automatically inserted temperature value with your previously measured value (for example, the observed temperature value from your calibration certificate).

    Scroll down and repeat for **Reference value, point 2**, **Measured value, point 2**, and **Measured temperature, point 2** (if performing a 2-point adjustment).

14. To store the adjustments to the probe, scroll down and select **Activate adjustment > OK**. Confirm by selecting **OK**.

    To exit without taking the adjustment in use, press ⊜ to end calibration.
15. Update the calibration information in **Calibrate / Adjust > Calibration information**. Navigate to the **Calibration information** menu by pressing ⊂.
16. Press ⊜ to end calibration.

More information

- Connecting probes to Indigo80 (page 65)
- Adjustment points and requirements (page 72)

8.6.3 Restoring factory adjustment with Indigo80 handheld indicator

- Probe connection cable (M12-M12, Vaisala item code 272075SP)

If needed, you can restore the factory adjustment for your probe's output parameters using the Indigo80 handheld indicator.

Note that restoring the factory adjustment is not necessary before a new adjustment: you can just perform the new adjustment on top of the old adjustment. However, you can select to do the restore procedure if your adjustment fails for some reason, or if you want to return to the original factory adjustment.

1. Connect the probe(s) to the indicator.
2. Open the indicator main menu by pressing ⊜.
3. Select **Devices**. If you have more than one device connected to the indicator, make a further selection between the devices.
4. Select **Calibrate / Adjust**.
5. Acknowledge the notification by pressing **OK**.
6. Select the type of adjustment to restore.

   For example, select **RH adjustment**.
7. If you have **two probes** connected to the indicator:
   a. Select **Manual adjustment**.
   b. Scroll down and acknowledge the notification by pressing **OK**.
   c. The options **Read from device** and **Enter manually** will be visible at this point. Select **Enter manually**.

8. If you have **one probe** connected to the indicator:
   a. Select **Manual adjustment**.
   b. Scroll down and acknowledge the notification by pressing **OK**.
9. Scroll down and select **Restore factory adjustment > OK**.
10. Confirm by selecting **OK**.
11. Press ☰ to end calibration.

More information

- Connecting probes to Indigo80 (page 65)

9. Maintenance

9.1 Cleaning the HMP and TMP probes

CAUTION! Do not attempt to clean the sensors under the filter.

Do not spray anything directly on the probe head, since that may deposit impurities on the sensors.

You can clean the probe, probe body, and cable by wiping them with a soft, lint-free cloth moistened with water or a suitable cleaning agent, such as isopropyl alcohol. Do not wipe the filter: wiping the filter may block its pores and/or deposit residue on the filter. If the filter is heavily contaminated, replace it.

When cleaning, follow these precautions:

- Avoid touching the filter. If you need to touch the filter, always wear clean gloves (cotton, rubber or similar material). Keep the filter free of any grease or oil.
- Do not scrape the probe or the probe body.
- Do not immerse the probe or the probe body in liquid to clean them.
- Wipe cleaning agents off the probe, probe body, and the cable after cleaning.

After cleaning the probe, it is recommended to perform sensor purge.

9.2 Cleaning the MMP8 probe

- Instrument air
- Soft, lint-free cloth
- Purified gasoline or heptane liquid
- Isopropyl alcohol

Wear protective eyewear and gloves.

This procedure describes how to clean the MMP8 Moisture in Oil Probe after detaching it from its measurement location. Clean the probe using these instructions before storage, shipping, calibration, or sensor replacement.

Cleaning the probe and its sensor is important to prevent oxidation of the oil on the sensor. Oxidized oil residue on the sensor may lead to extended response times and measurement drift.

- Do not scrape the probe or the probe body.
- Do not immerse the probe body (the part that contains the M12 connector) in liquid.

1. Wipe the probe head with a soft, lint-free cloth to remove any oil on the surface.
2. Immerse the tip of the probe head in purified gasoline or heptane liquid. Make sure the filter is completely immersed. Move the tip of the probe head in the liquid to clean the filter and the sensor.
3. With the filter still attached, blow on the probe head with instrument air.
4. Remove the filter and dry the sensor gently with instrument air. Check that the sensor looks clean. Sensor replacement is recommended for sensors that appear dirty after being cleaned in this manner.
5. Reattach the filter and tighten it properly (recommended force 5 Nm).
6. Wipe the probe body, cable, and probe head with a soft, lint-free cloth moistened with isopropyl alcohol.

9.3 Chemical tolerance

Avoid exposing the probe to cleaning agents for unnecessarily long periods of time.

Table 6 Suitability of cleaning agents

Cleaning Agent	Suitability
Acetone	Suitable
Chlorine disinfectants	Suitable
Ethanol	Suitable
Heptane	Suitable
Isopropyl alcohol	Suitable

9.4 Changing the probe filter

- New compatible filter
- Clean lint-free gloves

CAUTION! Sensors are easily damaged when the filter is not in place. Handle the probe head carefully.

HMP9 and TMP1 probe models do not have a removable filter.

1. Put on clean gloves before touching the filter.
2. Turn the filter counter-clockwise to loosen it.
3. Remove the filter from the probe head. Be careful not to touch the sensors with the filter.
4. Install a new filter on the probe head. Tighten the filter properly (recommended force 5 Nm).

9.5 Replacing the HUMICAP® sensor

- New HUMICAP® R2 sensor
- New compatible filter
- Clean lint-free gloves
- 11.3 %RH and 75.5 %RH humidity references (using Vaisala HMK15 Humidity Calibrator), or other humidity references of your choice
- Computer with a Microsoft Windows® operating system (64-bit version) and Vaisala Insight PC software installed
- Indigo USB adapter (item code USB2) or USB connection cable (item code 242659)

Follow this procedure to replace a HUMICAP® R2 humidity sensor if it has been damaged, or normal adjustment is not sufficient to restore the humidity measurement accuracy. It is recommended that you replace the filter at the same time. The procedure includes a special 2-point adjustment of humidity measurement using the Insight PC software. This **RH adjustment for new sensor** must be done every time after the HUMICAP® R2 sensor has been replaced.

Of the humidity sensors available in HMP series probes, only HUMICAP® R2 sensors are designed to be replaced by the user. If you need to replace another type of humidity sensor, such as a composite sensor, contact a Vaisala Service Center.

CAUTION! Sensors are easily damaged when the filter is not in place. Handle the probe head carefully.

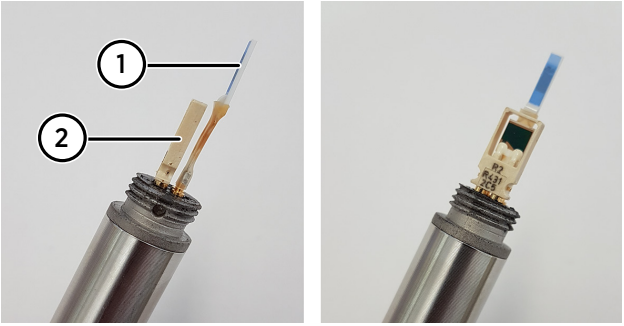

Figure 42 Example: HMP3 probe head with filter removed

1 Pt100 temperature sensor
2 HUMICAP® R2 humidity sensor

1. Put on clean gloves before touching the filter.
2. Turn the filter counter-clockwise to loosen it.
3. Remove the filter from the probe head. Be careful not to touch the sensors with the filter.
4. There are two sensors under the filter, the HUMICAP® sensor and a temperature sensor. Identify the HUMICAP® sensor and make sure it is of the type that you can replace yourself (temperature sensor not attached to it).
5. Pull out the old HUMICAP® sensor and insert the new one.

> **CAUTION!** Handle the new sensor by the plastic frame. Do not touch the sensor element in the middle of the sensor. Do not touch the temperature sensor.

6. Open the Insight software on your computer.
7. Select **Settings > Advanced mode**.
8. Connect the probe to the Insight software.
9. Select ⚙ **> Calibrate > Yes** to switch the probe to calibration mode.

   In calibration mode, the device will not use functions that may interfere with calibration and adjustment.
10. Select **RH adjustment for new sensor**.

11. Adjust the 11.3 %RH point (dry end):
    a. Insert the probe head in the 11.3 %RH reference.
    b. Wait for the measurement to stabilize fully.
    c. When the measurement has stabilized, click the **Reference value, point 1** field and enter the RH level of the first reference point (`11.3`). Press **Enter** or click outside the field when done.
    d. The probe automatically enters the measured temperature value for the calibration point.
12. Adjust the 75.5 %RH point (wet end):
    a. Insert the probe head in the 75.5 %RH reference.
    b. Wait for the measurement to stabilize fully.
    c. When the measurement has stabilized, click the **Reference value, point 2** field and enter the RH level of the second reference point (`75.5`). Press **Enter** or click outside the field when done.
    d. The probe automatically enters the measured temperature value for the calibration point.
13. To save the adjustment into the device, select **Overwrite factory adjustment**.
14. Remove the probe head from the calibration reference and install a new filter. Tighten the filter properly (recommended force 5 Nm).
15. Select the **Calibration information** tab and update the **Calibration date** and **Calibration text**.
16. Select **Close** to exit the calibration mode.

More information

- Connecting to Insight software (page 54)

10. Troubleshooting

10.1 Problem situations

Table 7 Troubleshooting table

Problem	Possible cause	Solution
Measurement output seems incorrect	Installation location is not representative of actual conditions you want to measure	Verify the installation location and relocate the probe if necessary.
	Heat conduction along probe head and cable is interfering with measurement accuracy	Follow the installation recommendations for cases when temperature of measured environment differs greatly from ambient. See Installation (page 25).
	Probe is in need of adjustment	Calibrate and adjust the probe.
Probe status indicator LED is red	Probe is in error state	Connect the probe to Insight software or an Indigo transmitter and read the error message(s). See Vaisala Insight software (page 54) and Error messages (page 89).
Probe status indicator LED is off even though power is on	Probe model is HMP1, or HMP3/HMP7 with a 0.15-m (0.49-ft) probe connection cable.	To prevent the warming of the indicator LED from causing a slight measurement error, HMP1 probes keep the indicator normally off (even when power is on). If the probe is in error state, the red LED is shown. The same applies to HMP3 and HMP7 probes with a 0.15-m (0.49-ft) probe connection cable.
Values of measurement parameters stop changing for a few minutes	Probe is performing a sensor heating function such as sensor purge or waiting for the sensor to cool down	Wait for the function to complete and measurement parameters to be available again.

10.2 Error messages

Probes can communicate with error messages when they are connected to an Indigo transmitter or Insight software. The messages are categorized according to the severity of the status:

- **Critical errors** are fatal to the operation of the device. It may not be able to respond to communication at all, and will not measure correctly.
- **Errors** prevent normal operation of the device. Depending on the problem, errors may resolve themselves. For example, a completely wet humidity sensor may cause a humidity measurement error.
- **Warnings** do not prevent normal operation but may indicate possible problems.
- **Status** indicates a known state of the device.

Error message	Description	Recommended action
Critical errors		
Firmware checksum mismatch [49]	The installed firmware is corrupted.	Contact Vaisala technical support.
Device settings corrupted [50]	Parameter memory is corrupted.	
Additional configuration settings corrupted [51]		
Sensor coefficients corrupted [52]		
Main configuration settings corrupted [53]		
Factory default settings corrupted [54]		
Non-volatile memory read write failure [57]	Hardware fault.	
Errors		
Temperature measurement error [44]	Readings from sensor(s) are missing or out of range.	Inspect probe head and sensors visually. If the probe is completely wet, allow it to dry out. If the sensors are damaged or missing and the error message(s) stay active, contact Vaisala to have the probe repaired.
Humidity measurement error [45]		
Humidity sensor failure [46]		

Errors		
Capacitance reference error [47]	Hardware fault.	Contact Vaisala technical support.
Sensor heater error [212]		
General device failure [994]	High number of measurement errors, capacitance reference errors, or sensor heater errors written in the error log.	
Ambient temperature out of range [48]	Probe body is too hot or cold.	Relocate the probe body so that its ambient temperature is within the specified operating range.
Supply voltage out of range [55]	Probe supply voltage is too high or low.	Check and correct the supply voltage.
Warnings		
Calibration certificate checksum mismatch [58]	Certificate stored in the probe has an invalid checksum.	Contact Vaisala technical support
Calibration has expired [353]	This warning is displayed by the calibration reminder functionality on the day the calibration expires if the calibration interval has been exceeded.	Calibrate the probe and update the calibration date information.
Supply voltage too low for probe heating [678]	Probe heating is enabled but supply voltage is too low for probe to use it.	This warning is expected when probe heating is enabled and the probe is connected to Insight software using an USB cable. The operating voltage provided by the cable is not sufficient for probe heating. If probe is not connected using a Vaisala USB cable, check the supply voltage.
Software restart [679]	The probe has automatically restarted itself.	Check that supply voltage is stable and operating environment is within specification.
Unexpected device restart [216]		
Status messages		
Calibration is about to expire [352]	This message is displayed by the calibration reminder functionality 30 days before the calibration expires.	Calibrate the probe and update the calibration date information.

Status messages		
Purge in progress [287]	Sensor purge of the humidity sensor is ongoing.	Wait for sensor purge to complete.
The readings stay frozen until the sensor cools down [288]	Probe is waiting for its sensors to cool down.	Wait for measurement readings to become available.

10.3 Restoring factory default settings with Insight software

If needed, you can restore the probe back to its factory default settings using the Insight software. Doing this will also clear any user adjustment and restore the latest adjustment performed by Vaisala.

1. Connect the probe to the Insight software.
2. Select ⚙ **> Factory default settings > Restore settings**.
3. Wait for the probe to be re-detected.

More information

- Connecting to Insight software (page 54)

10.4 Restoring factory default settings with Indigo80 handheld indicator

- Probe connection cable (M12-M12, Vaisala item code 272075SP)

If needed, you can restore the probe back to its factory default settings using the Indigo80 handheld indicator. The user adjustment of the probe and the settings or log files of the indicator itself are not affected.

1. Connect the probe(s) to the indicator.
2. Open the indicator main menu by pressing ☰.
3. Select **Devices**. If you have more than one device connected to the indicator, make a further selection between the devices.
4. Select **Settings**.
5. Scroll down and select **Factory default settings > Restore settings > OK**.

6. Confirm by selecting **OK**.

More information

- Connecting probes to Indigo80 (page 65)

11. Technical data

11.1 HMP1 specifications

Table 8 HMP1 measurement performance

Property	Description/Value
Relative humidity	
Measurement range	0–100 %RH
Accuracy at +23 °C (+73.4 °F) [1) 2)]	±1.0 %RH (0–90 %RH)
Factory calibration uncertainty [3)]	±0.7 %RH (0–40 %RH) ±1 %RH (40–95 %RH)
Non-linearity	0.4 %RH
T_{63} response time [4)]	21 s
Sensor	HUMICAP® I
Temperature	
Measurement range	−40 ... +60 °C (−40 ... +140 °F)
Accuracy at +23 °C (+73.4 °F) [1) 2)]	±0.2 °C (±0.36 °F)
Factory calibration uncertainty [3)]	±0.1 °C (±0.18 °F) at +23 °C (+73.4 °F)
T_{63} response time [4)]	70 s

1) *Defined against calibration reference. Including non-linearity, hysteresis, and repeatability.*
2) *In typical room conditions.*
3) *Defined as ±2 standard deviation limits. Small variations possible; see calibration certificate.*
4) *In still air.*

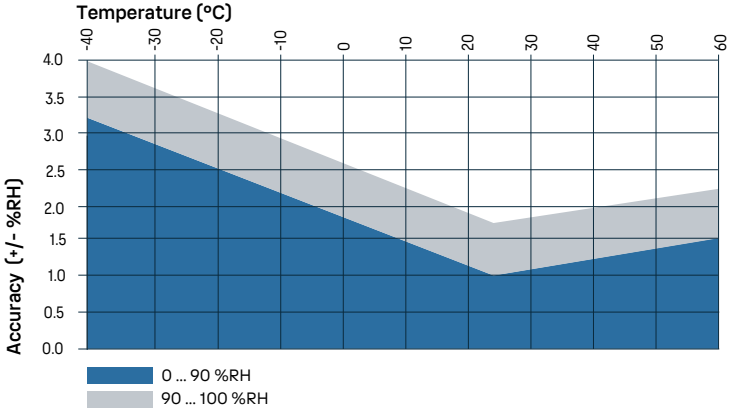

Figure 43 HMP1 humidity measurement accuracy as a function of temperature

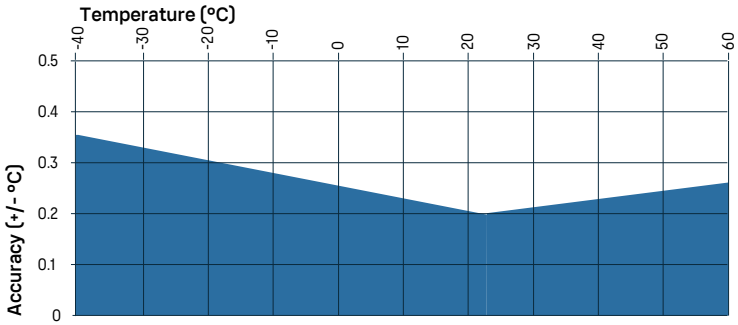

Figure 44 HMP1 temperature measurement accuracy over full range

Table 9 HMP1 operating environment

Property	Description/Value
Operating temperature	−40 ... +60 °C (−40 ... +140 °F)
Storage temperature	−40 ... +60 °C (−40 ... +140 °F)
Measurement environment	For air, nitrogen, hydrogen, argon, helium, and oxygen [1)]
IP rating	IP50: Limited protection against dust.

1) *Consult Vaisala if other chemicals are present. Consider safety regulations with flammable gases.*

Table 10 HMP1 inputs and outputs

Property	Description/Value
Operating voltage	15–30 V DC
Current consumption	2 mA typical, 200 mA max.
Digital output	RS-485, non-isolated
Protocol	Modbus RTU

Table 11 HMP1 output parameters

Output parameter name and unit	
Absolute humidity (g/m^3)	Relative humidity (%RH)
Absolute humidity at NTP (g/m^3)	Relative humidity (dew/frost) (%RH)
Dew point temperature (°C)	Temperature (°C)
Dew/frost point temperature (°C)	Water concentration (ppm$_v$)
Dew/frost point temperature at 1 atm (°C)	Water concentration (wet basis) (vol-%)
Dew point temperature at 1 atm (°C)	Water mass fraction (ppm$_w$)
Dew/frost point depression (°C)	Water vapor pressure (hPa)
Enthalpy (kJ/kg)	Water vapor saturation pressure (hPa)
Mixing ratio (g/kg)	Wet-bulb temperature (°C)

Table 12 HMP1 compliance

Property	Value/Description
EU directives and regulations	EMC Directive (2014/30/EU) RoHS Directive (2011/65/EU) as amended by 2015/863
Electromagnetic compatibility (EMC)	EN 61326-1, industrial environment
Compliance marks	CE, China RoHS, RCM

Table 13 HMP1 mechanical specifications

Property	Description/Value
Connector	M12 5-pin A-coded male
Weight	38 g (1.34 oz)
Materials	

Property	Description/Value
Probe	AISI 316L
Probe body	PBT

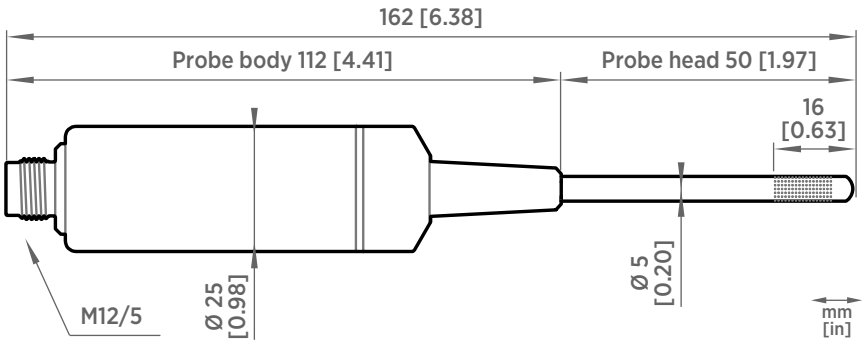

Figure 45 HMP1 probe dimensions

11.2 HMP3 specifications

Table 14 HMP3 measurement performance

Property	Description/Value
Relative humidity	
Measurement range	0–100 %RH, at max. +95 °C (203 °F) T_d
Accuracy at +23 °C (+73.4 °F) [1]	±0.8 %RH (0–90 %RH)
Factory calibration uncertainty [2]	±0.5 %RH (0–40 %RH) ±0.8 %RH (40–95 %RH)
T_{63} response time	15 s
Sensor options	HUMICAP® R2 HUMICAP® R2C [3] HUMICAP® 180VC [3] [4]
Temperature	
Sensor	Pt100 RTD Class F0.1 IEC 60751
Measurement range	−40 ... +120 °C (−40 ... +248 °F)
Accuracy [1] [5]	±0.1 °C (±0.18 °F)

Property	Description/Value
Factory calibration uncertainty [2]	±0.1 °C (±0.18 °F) at +23 °C (+73.4 °F)

1) *Defined against calibration reference. Including non-linearity, hysteresis, and repeatability.*
2) *Defined as ±2 standard deviation limits. Small variations possible; see calibration certificate.*
3) *Sensor purge feature available with this sensor.*
4) *H_2O_2 resistant. With HUMICAP® 180VC sensor, accuracy is not specified below −20 °C (−4 °F) operating temperature.*
5) *Exposing temperature sensor to temperatures outside −20 ... +150 °C (−4 ... +302 °F) may cause permanent additional deviation of ±0.1 °C (0.18 °F)*

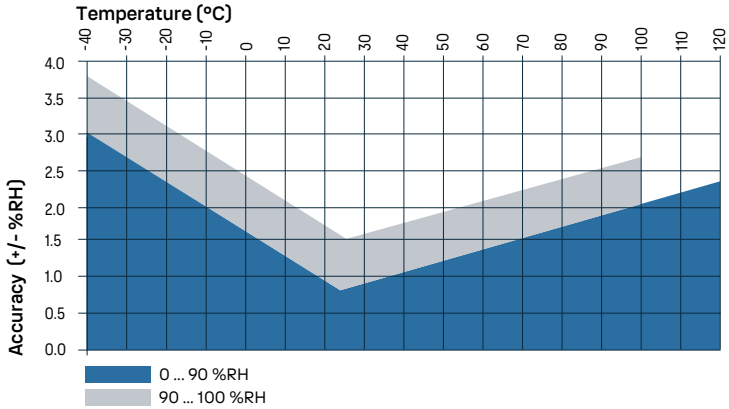

Figure 46 HMP3 humidity measurement accuracy as a function of temperature

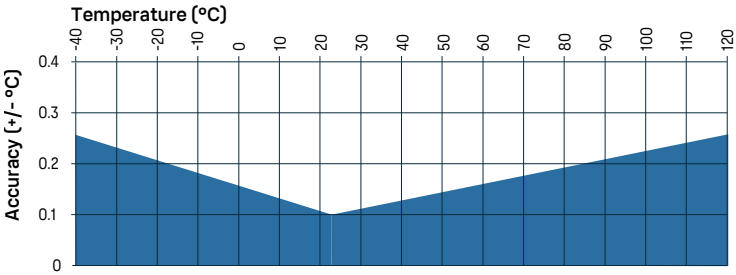

Figure 47 HMP3 temperature measurement accuracy over full range

Table 15 HMP3 operating environment

Property	Description/Value
Operating temperature of probe body	−40 ... +80 °C (−40 ... +176 °F)
Operating temperature of probe head	−40 ... +120 °C (−40 ... +248 °F)
Operating humidity of probe head	Max. +100 °C (212 °F) T_d
Storage temperature	−40 ... +80 °C (−40 ... +176 °F)
Operating environment	Suitable for outdoor use
Measurement environment	For air, nitrogen, hydrogen, argon, helium, and oxygen [1)]
IP rating of probe body	IP66: Dust-tight. Protected from powerful water jets from any direction.

1) *Consult Vaisala if other chemicals are present. Consider safety regulations with flammable gases.*

Table 16 HMP3 inputs and outputs

Property	Description/Value
Operating voltage	15–30 V DC
Current consumption	10 mA typical, 500 mA max.
Digital output	RS-485, non-isolated
Protocols	Modbus RTU

Table 17 HMP3 output parameters

Output parameter name and unit	
Absolute humidity (g/m^3)	Relative humidity (%RH)
Absolute humidity at NTP (g/m^3)	Relative humidity (dew/frost) (%RH)
Dew point temperature (°C)	Temperature (°C)
Dew/frost point temperature (°C)	Water concentration (ppm$_v$)
Dew/frost point temperature at 1 atm (°C)	Water concentration (wet basis) (vol-%)
Dew point temperature at 1 atm (°C)	Water mass fraction (ppm$_w$)
Dew/frost point depression (°C)	Water vapor pressure (hPa)
Enthalpy (kJ/kg)	Water vapor saturation pressure (hPa)
Mixing ratio (g/kg)	Wet-bulb temperature (°C)

Table 18 HMP3 compliance

Property	Value/Description
EU directives and regulations	EMC Directive (2014/30/EU) RoHS Directive (2011/65/EU) as amended by 2015/863
Electromagnetic compatibility (EMC)	EN 61326-1, industrial environment
Type approvals	DNV GL certificate no. TAA00002YT
Compliance marks	CE, China RoHS, RCM

Table 19 HMP3 mechanical specifications

Property	Description/Value
Connector	M12 5-pin A-coded male
Weight (with a 2-m cable)	302 g (10.65 oz)
Probe cable length	0.15 m (0.49 ft), 2 m (6.56 ft), 5 m (16.40 ft) or 10 m (32.80 ft)
Materials	
Probe	AISI 316L
Probe body	AISI 316L
Cable jacket	FEP

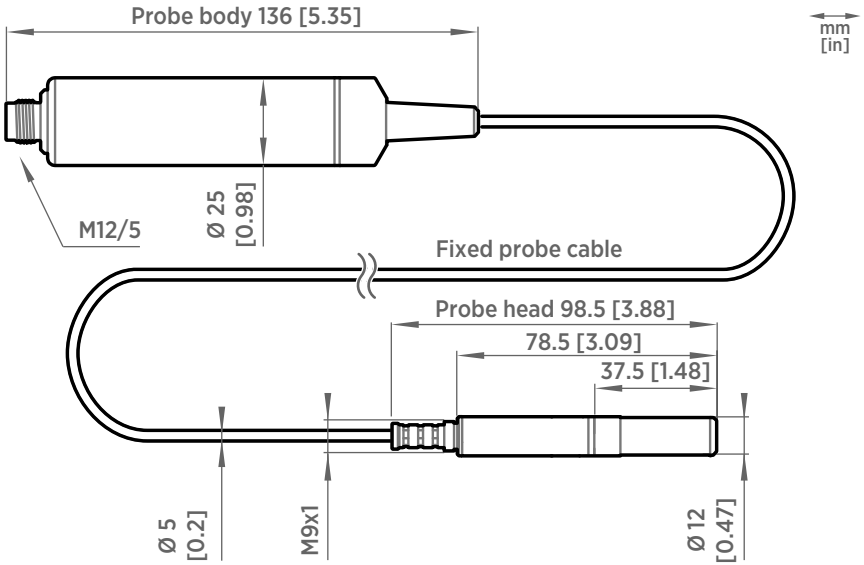

Figure 48 HMP3 probe dimensions

11.3 HMP4 specifications

Table 20 HMP4 measurement performance

Property	Description/Value
Relative humidity	
Measurement range	0–100 %RH, at max. +95 °C (203 °F) T_d
Accuracy at +23 °C (+73.4 °F) [1]	±0.8 %RH (0–90 %RH)
Factory calibration uncertainty [2]	±0.5 %RH (0–40 %RH) ±0.8 %RH (40–95 %RH)
T_{63} response time	15 s
Sensor options	HUMICAP® R2 HUMICAP® R2C [3]
Temperature	
Measurement range	−70 ... +180 °C (−94 ... +356 °F)
Accuracy [1] [4]	±0.1 °C (±0.18 °F)

Property	Description/Value
Factory calibration uncertainty [2]	±0.1 °C (±0.18 °F) at +23 °C (+73.4 °F)
Sensor	Pt100 RTD Class F0.1 IEC 60751

1) *Defined against calibration reference. Including non-linearity, hysteresis, and repeatability.*
2) *Defined as ±2 standard deviation limits. Small variations possible; see calibration certificate.*
3) *Sensor purge feature available with this sensor.*
4) *Exposing temperature sensor to temperatures outside −20 ... +150 °C (−4 ... +302 °F) may cause permanent additional deviation of ±0.1 °C (0.18 °F)*

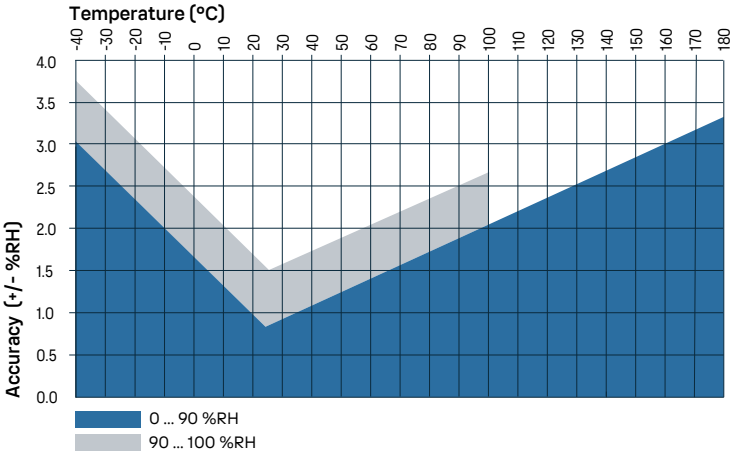

Figure 49 HMP4 humidity measurement accuracy as a function of temperature

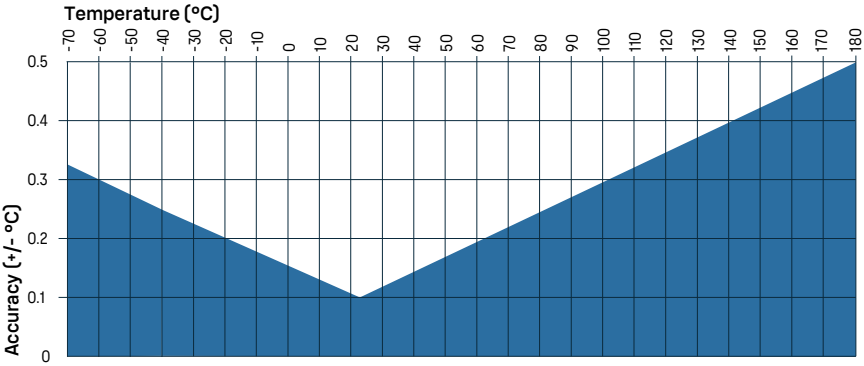

Figure 50 HMP4 temperature measurement accuracy over full range

Table 21 HMP4 operating environment

Property	Description/Value
Operating temperature of probe body	−40 ... +80 °C (−40 ... +176 °F)
Operating temperature of probe head	−70 ... +180 °C (−94 ... +356 °F)
Operating humidity of probe head	Max. +100 °C (212 °F) T_d
Storage temperature	−40 ... +80 °C (−40 ... +176 °F)
Operational pressure	< 100 bar
Operating environment	Suitable for outdoor use
Measurement environment	For air, nitrogen, hydrogen, argon, helium, oxygen, and vacuum [1)]
IP rating of probe body	IP66: Dust-tight. Protected from powerful water jets from any direction.

1) *Consult Vaisala if other chemicals are present. Consider safety regulations with flammable gases.*

Table 22 HMP4 inputs and outputs

Property	Description/Value
Operating voltage	15–30 V DC
Current consumption	10 mA typical, 500 mA max.
Digital output	RS-485, non-isolated
Protocols	Modbus RTU

Table 23 HMP4 output parameters

Output parameter name and unit	
Absolute humidity (g/m^3)	Relative humidity (%RH)
Absolute humidity at NTP (g/m^3)	Relative humidity (dew/frost) (%RH)
Dew point temperature (°C)	Temperature (°C)
Dew/frost point temperature (°C)	Water concentration (ppm$_v$)
Dew/frost point temperature at 1 atm (°C)	Water concentration (wet basis) (vol-%)
Dew point temperature at 1 atm (°C)	Water mass fraction (ppm$_w$)
Dew/frost point depression (°C)	Water vapor pressure (hPa)
Enthalpy (kJ/kg)	Water vapor saturation pressure (hPa)

Output parameter name and unit	
Mixing ratio (g/kg)	Wet-bulb temperature (°C)

Table 24 HMP4 compliance

Property	Value/Description
EU directives and regulations	EMC Directive (2014/30/EU) RoHS Directive (2011/65/EU) as amended by 2015/863
Electromagnetic compatibility (EMC)	EN 61326-1, industrial environment
Type approvals	DNV GL certificate no. TAA00002YT
Compliance marks	CE, China RoHS, RCM

Table 25 HMP4 mechanical specifications

Property	Description/Value
Connector	M12 5-pin A-coded male
Fitting body	M22×1.5 or NPT1/2”
Weight (with a 2-m cable)	530 g (18.7 oz)
Probe cable length	2 m (6.56 ft)
Materials	
Probe	AISI 316
Probe body	AISI 316
Cable jacket	FEP

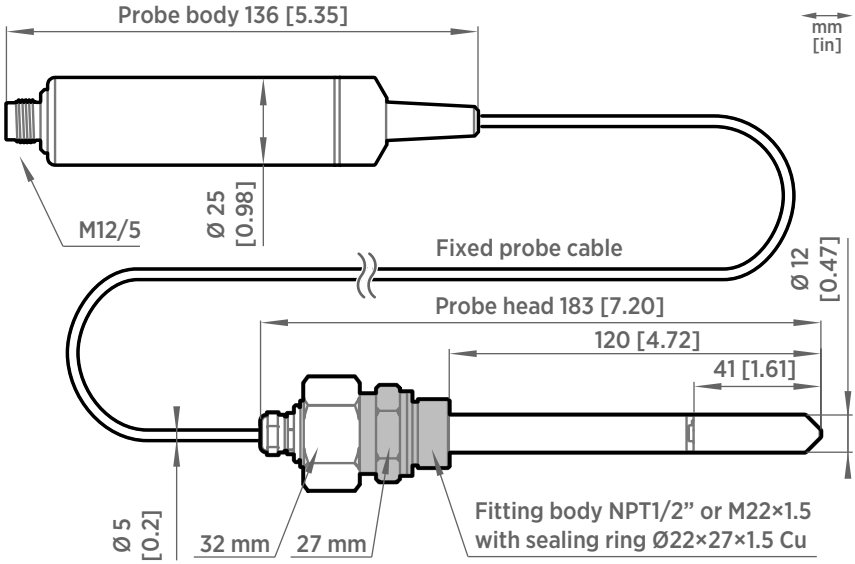

Figure 51 HMP4 probe dimensions

11.4 HMP5 specifications

Table 26 HMP5 measurement performance

Property	Description/Value
Relative humidity	
Measurement range	0–100 %RH, at max. +95 °C (203 °F) T_d
Accuracy at +23 °C (+73.4 °F) [1]	±0.8 %RH (0–90 %RH)
Factory calibration uncertainty [2]	±0.5 %RH (0–40 %RH) ±0.8 %RH (40–95 %RH)
T_{63} response time	15 s
Sensor options	HUMICAP® R2 HUMICAP® R2C [3]
Temperature	
Measurement range	−70 ... +180 °C (−94 ... +356 °F)
Accuracy at +23 °C (+73.4 °F) [1] [4]	±0.1 °C (±0.18 °F)

Property	Description/Value
Factory calibration uncertainty [2]	±0.1 °C (±0.18 °F) at +23 °C (+73.4 °F)
Sensor	Pt100 RTD Class F0.1 IEC 60751

1) *Defined against calibration reference. Including non-linearity, hysteresis, and repeatability.*
2) *Defined as ±2 standard deviation limits. Small variations possible; see calibration certificate.*
3) *Sensor purge feature available with this sensor.*
4) *Exposing temperature sensor to temperatures outside −20 ... +150 °C (−4 ... +302 °F) may cause permanent additional deviation of ±0.1 °C (0.18 °F)*

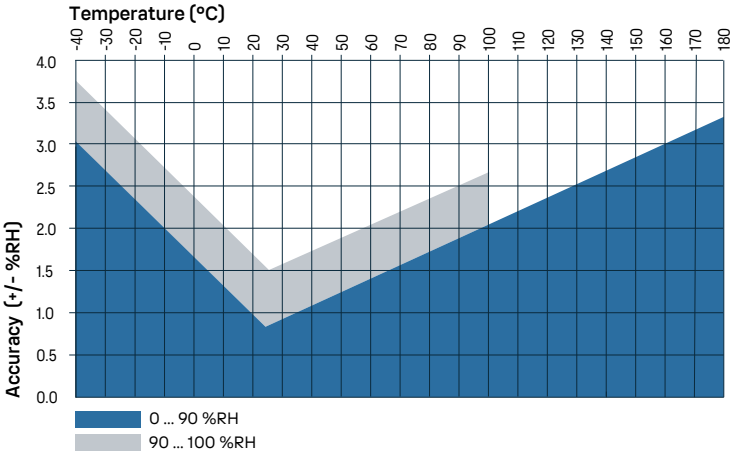

Figure 52 HMP5 humidity measurement accuracy as a function of temperature

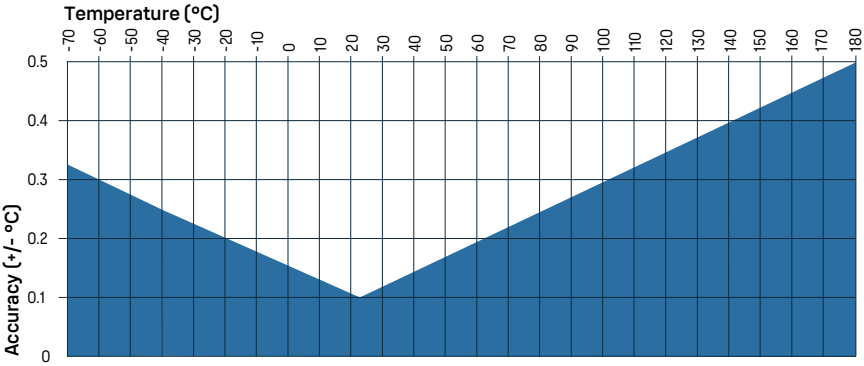

Figure 53 HMP5 temperature measurement accuracy over full range

Table 27 HMP5 operating environment

Property	Description/Value
Operating temperature of probe body	−40 ... +80 °C (−40 ... +176 °F)
Operating temperature of probe head	−70 ... +180 °C (−94 ... +356 °F)
Operating humidity of probe head	Max. +100 °C (212 °F) T_d
Storage temperature	−40 ... +80 °C (−40 ... +176 °F)
Operating environment	Suitable for outdoor use
IP rating of probe body	IP66: Dust-tight. Protected from powerful water jets from any direction.

Table 28 HMP5 inputs and outputs

Property	Description/Value
Operating voltage	15–30 V DC
Current consumption	10 mA typical, 500 mA max.
Digital output	RS-485, non-isolated
Protocols	Modbus RTU

Table 29 HMP5 output parameters

Output parameter name and unit	
Absolute humidity (g/m^3)	Relative humidity (%RH)
Absolute humidity at NTP (g/m^3)	Relative humidity (dew/frost) (%RH)
Dew point temperature (°C)	Temperature (°C)
Dew/frost point temperature (°C)	Water concentration (ppm$_v$)
Dew/frost point temperature at 1 atm (°C)	Water concentration (wet basis) (vol-%)
Dew point temperature at 1 atm (°C)	Water mass fraction (ppm$_w$)
Dew/frost point depression (°C)	Water vapor pressure (hPa)
Enthalpy (kJ/kg)	Water vapor saturation pressure (hPa)
Mixing ratio (g/kg)	Wet-bulb temperature (°C)

Table 30 HMP5 compliance

Property	Value/Description
EU directives and regulations	EMC Directive (2014/30/EU) RoHS Directive (2011/65/EU) as amended by 2015/863
Electromagnetic compatibility (EMC)	EN 61326-1, industrial environment
Type approvals	DNV GL certificate no. TAA00002YT
Compliance marks	CE, China RoHS, RCM

Table 31 HMP5 mechanical specifications

Property	Description/Value
Connector	M12 5-pin A-coded male
Weight (with a 2-m cable)	436 g (15.37 oz)
Probe cable length	2 m (6.56 ft) or 10 m (32.8 ft)
Materials	
Probe	AISI 316L
Probe body	AISI 316L
Cable jacket	FEP

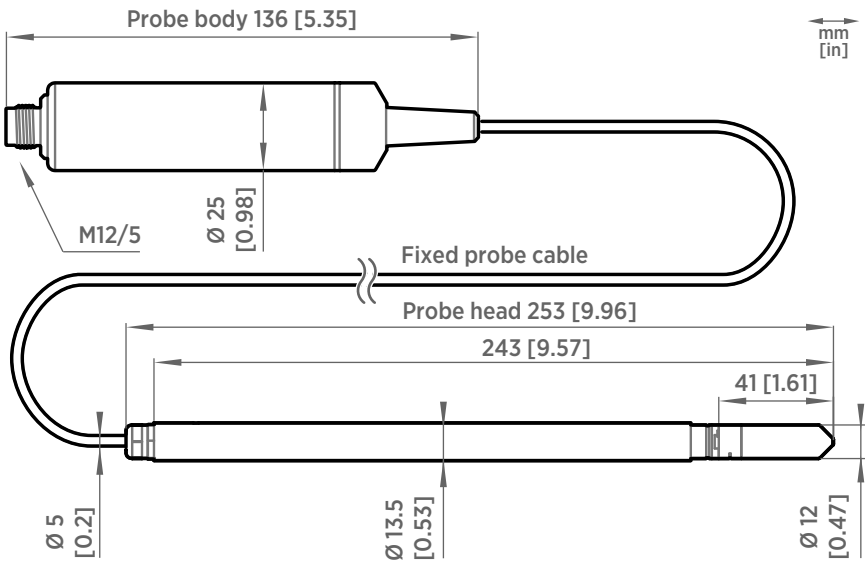

Figure 54 HMP5 probe dimensions

11.5 HMP7 specifications

Table 32 HMP7 measurement performance

Property	Description/Value
Relative humidity	
Measurement range	0–100 %RH, at max. +95 °C (203 °F) T_d
Accuracy at +23 °C (+73.4 °F) [1]	±0.8 %RH (0–90 %RH)
Factory calibration uncertainty [2]	±0.5 %RH (0–40 %RH) ±0.8 %RH (40–95 %RH)
T_{63} response time	15 s
Sensor options	HUMICAP® R2 HUMICAP® R2C [3] HUMICAP® 180VC [3] [4]
Temperature	
Measurement range	−70 ... +180 °C (−94 ... +356 °F)

Property	Description/Value
Accuracy at +23 °C (+73.4 °F) [1) 5)]	±0.1 °C (±0.18 °F)
Factory calibration uncertainty [2)]	±0.1 °C (±0.18 °F) at +23 °C (+73.4 °F)
Sensor	Pt100 RTD Class F0.1 IEC 60751

1) *Defined against calibration reference. Including non-linearity, hysteresis, and repeatability.*
2) *Defined as ±2 standard deviation limits. Small variations possible; see calibration certificate.*
3) *Sensor purge feature available with this sensor.*
4) *H_2O_2 resistant. With HUMICAP® 180VC sensor, accuracy is not specified below −20 °C (−4 °F) operating temperature.*
5) *Exposing temperature sensor to temperatures outside −20 ... +150 °C (−4 ... +302 °F) may cause permanent additional deviation of ±0.1 °C (0.18 °F)*

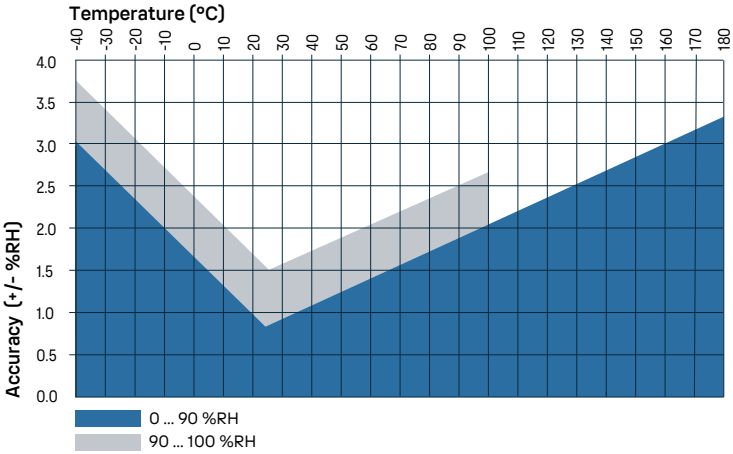

Figure 55 HMP7 humidity measurement accuracy as a function of temperature

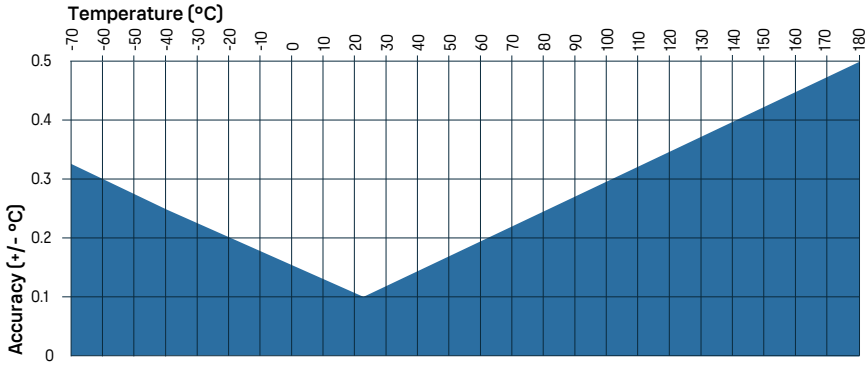

Figure 56 HMP7 temperature measurement accuracy over full range

Table 33 HMP7 operating environment

Property	Description/Value
Operating temperature of probe body	−40 ... +80 °C (−40 ... +176 °F)
Operating temperature of probe head	−70 ... +180 °C (−94 ... +356 °F)
Operating humidity of probe head	Max. +100 °C (212 °F) T_d
Storage temperature	−40 ... +80 °C (−40 ... +176 °F)
Operational pressure	< 10 bar
Operating environment	Suitable for outdoor use
Measurement environment	For air, nitrogen, hydrogen, argon, helium, oxygen, and vacuum [1)]
IP rating of probe body	IP66: Dust-tight. Protected from powerful water jets from any direction.

1) *Consult Vaisala if other chemicals are present. Consider safety regulations with flammable gases.*

Table 34 HMP7 inputs and outputs

Property	Description/Value
Operating voltage	18–30 V DC
Current consumption	10 mA typical, 500 mA max.
Digital output	RS-485, non-isolated
Protocols	Modbus RTU

Table 35 HMP7 output parameters

Output parameter name and unit	
Absolute humidity (g/m^3)	Relative humidity (%RH)
Absolute humidity at NTP (g/m^3)	Relative humidity (dew/frost) (%RH)
Dew point temperature (°C)	Temperature (°C)
Dew/frost point temperature (°C)	Water concentration (ppm$_v$)
Dew/frost point temperature at 1 atm (°C)	Water concentration (wet basis) (vol-%)
Dew point temperature at 1 atm (°C)	Water mass fraction (ppm$_w$)
Dew/frost point depression (°C)	Water vapor pressure (hPa)
Enthalpy (kJ/kg)	Water vapor saturation pressure (hPa)
Mixing ratio (g/kg)	Wet-bulb temperature (°C)

Table 36 HMP7 compliance

Property	Value/Description
EU directives and regulations	EMC Directive (2014/30/EU) RoHS Directive (2011/65/EU) as amended by 2015/863
Electromagnetic compatibility (EMC)	EN 61326-1, industrial environment
Type approvals	DNV GL certificate no. TAA00002YT
Compliance marks	CE, China RoHS, RCM

Table 37 HMP7 mechanical specifications

Property	Description/Value
Connector	M12 5-pin A-coded male
Weight (with a 2-m cable)	310 g (10.9 oz)
Probe cable length	0.15 m (0.49 ft), 2 m (6.56 ft) or 10 m (32.80 ft)
Materials	
Probe	AISI 316L
Probe body	AISI 316L
Cable jacket	FEP

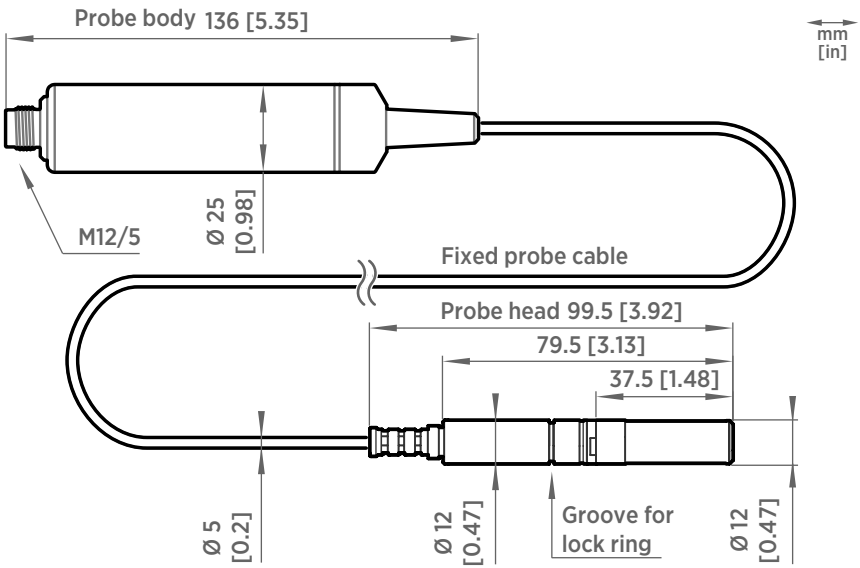

Figure 57 HMP7 probe dimensions

11.6 HMP8 specifications

Table 38 HMP8 measurement performance

Property	Description/Value
Relative humidity	
Measurement range	0–100 %RH, at max. +95 °C (203 °F) T_d
Accuracy at +23 °C (+73.4 °F) [1]	±0.8 %RH (0–90 %RH)
Factory calibration uncertainty [2]	±0.5 %RH (0–40 %RH) ±0.8 %RH (40–95 %RH)
T_{63} response time	15 s
Sensor options	HUMICAP® R2 HUMICAP® R2C [3]
Temperature	
Measurement range	−70 ... +180 °C (−94 ... +356 °F)
Accuracy at +23 °C (+73.4 °F) [1] [4]	±0.1 °C (±0.18 °F)

Property	Description/Value
Factory calibration uncertainty [2]	±0.1 °C (±0.18 °F) at +23 °C (+73.4 °F)
Sensor	Pt100 RTD Class F0.1 IEC 60751

1) *Defined against calibration reference. Including non-linearity, hysteresis, and repeatability.*
2) *Defined as ±2 standard deviation limits. Small variations possible; see calibration certificate.*
3) *Sensor purge feature available with this sensor.*
4) *Exposing temperature sensor to temperatures outside −20 ... +150 °C (−4 ... +302 °F) may cause permanent additional deviation of ±0.1 °C (0.18 °F).*

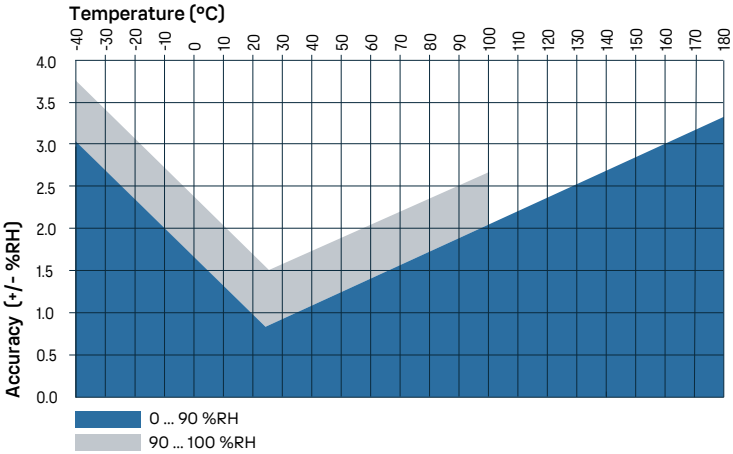

Figure 58 HMP8 humidity measurement accuracy as a function of temperature

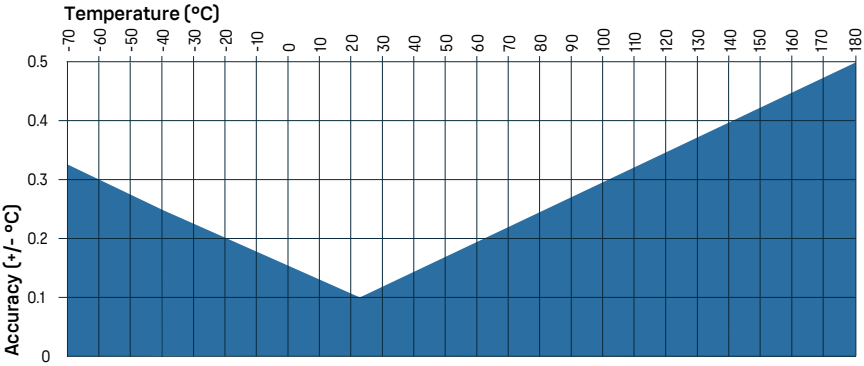

Figure 59 HMP8 temperature measurement accuracy over full range

Table 39 HMP8 operating environment

Property	Description/Value
Operating temperature of probe body	−40 ... +80 °C (−40 ... +176 °F)
Operating temperature of probe head	−70 ... +180 °C (−94 ... +356 °F)
Operating humidity of probe head	Max. +100 °C (212 °F) T_d
Storage temperature	−40 ... +80 °C (−40 ... +176 °F)
Operational pressure	< 40 bar
Operating environment	Suitable for outdoor use
Measurement environment	For air, nitrogen, hydrogen, argon, helium, oxygen, and vacuum [1)]
IP rating of probe body	IP66: Dust-tight. Protected from powerful water jets from any direction.
Ball valve	
Operating temperature	Up to +100 °C (+212 °F)
Operating pressure	Up to 40 bar (580 psi), absolute

1) *Consult Vaisala if other chemicals are present. Consider safety regulations with flammable gases.*

Table 40 HMP8 inputs and outputs

Property	Description/Value
Operating voltage	15–30 V DC
Current consumption	10 mA typical, 500 mA max.
Digital output	RS-485, non-isolated
Protocols	Modbus RTU

Table 41 HMP8 output parameters

Output parameter name and unit	
Absolute humidity (g/m^3)	Relative humidity (%RH)
Absolute humidity at NTP (g/m^3)	Relative humidity (dew/frost) (%RH)
Dew point temperature (°C)	Temperature (°C)
Dew/frost point temperature (°C)	Water concentration (ppm$_v$)
Dew/frost point temperature at 1 atm (°C)	Water concentration (wet basis) (vol-%)

Output parameter name and unit	
Dew point temperature at 1 atm (°C)	Water mass fraction (ppm_w)
Dew/frost point depression (°C)	Water vapor pressure (hPa)
Enthalpy (kJ/kg)	Water vapor saturation pressure (hPa)
Mixing ratio (g/kg)	Wet-bulb temperature (°C)

Table 42 HMP8 compliance

Property	Value/Description
EU directives and regulations	EMC Directive (2014/30/EU) RoHS Directive (2011/65/EU) as amended by 2015/863
Electromagnetic compatibility (EMC)	EN 61326-1, industrial environment
Type approvals	DNV GL certificate no. TAA00002YT 1)
Compliance marks	CE, China RoHS, RCM

1) *DNV GL certificate applies to the 268-mm-long HMP8 model only, not to the 454-mm-long model.*

Table 43 HMP8 mechanical specifications

Property	Description/Value
Connector	M12 5-pin A-coded male
Probe fitting	ISO1/2" and NPT1/2" fittings included
Weight (with a 2-m cable)	268-mm-long HMP8: 512 g (18.1 oz) 454-mm-long HMP8: 612 g (21.6 oz)
Probe cable length	2 m (6.56 ft) or 10 m (32.80 ft)
Adjustable installation depth	268-mm-long HMP8: 41–199 mm (1.61–7.83 in) 454-mm-long HMP8: 41–385 mm (1.61–15.16 in)
Materials	
Probe	AISI 316L
Probe body	AISI 316L
Cable jacket	FEP

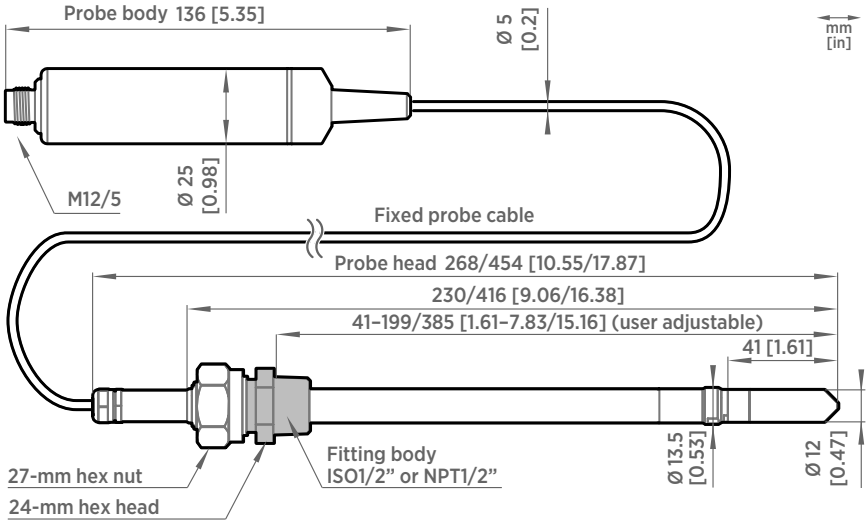

Figure 60 HMP8 probe dimensions

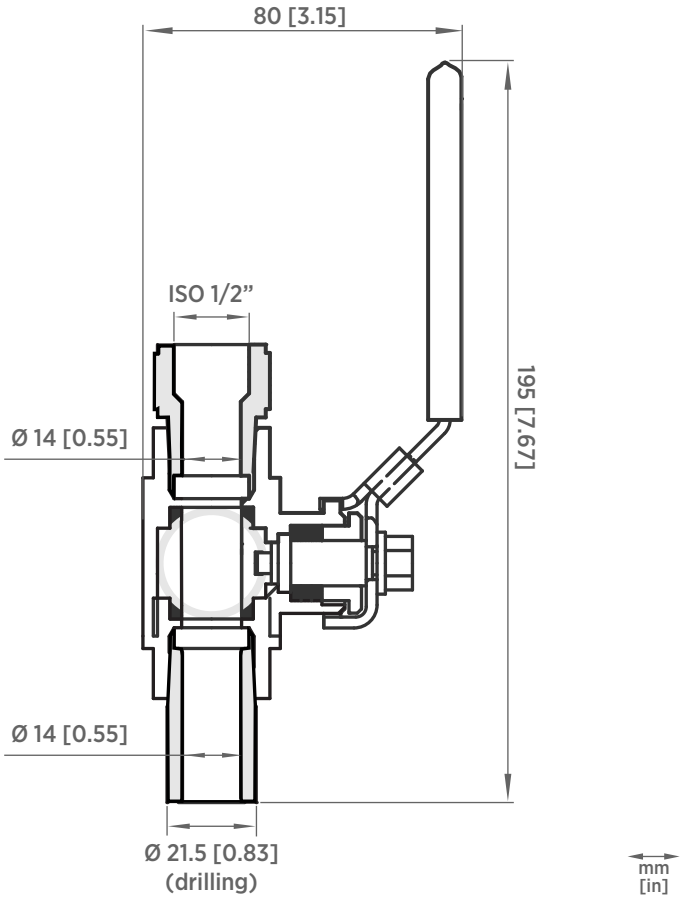

Figure 61 Optional ball valve kit dimensions

11.7 HMP9 specifications

Table 44 HMP9 measurement performance

Property	Description/Value
Relative humidity	
Measurement range	0–100 %RH, at max. +95 °C (203 °F) T_d
Accuracy at +23 °C (+73.4 °F) [1)]	±0.8 %RH (0–90 %RH)

Property	Description/Value
Factory calibration uncertainty [2]	±0.7 %RH (0–40 %RH) ±1 %RH (40–95 %RH)
Non-linearity	0.4 %RH
T_{63} response time [3]	15 s
Sensor	HUMICAP® I
Temperature	
Measurement range	−40 ... +120 °C (−40 ... +248 °F)
Accuracy at +23 °C (+73.4 °F) [1]	±0.1 °C (±0.18 °F)
Factory calibration uncertainty [2]	±0.1 °C (±0.18 °F) at +23 °C (+73.4 °F)
T_{63} response time [3]	70 s

1) *Defined against calibration reference. Including non-linearity, hysteresis, and repeatability.*
2) *Defined as ±2 standard deviation limits. Small variations possible; see calibration certificate.*
3) *In still air.*

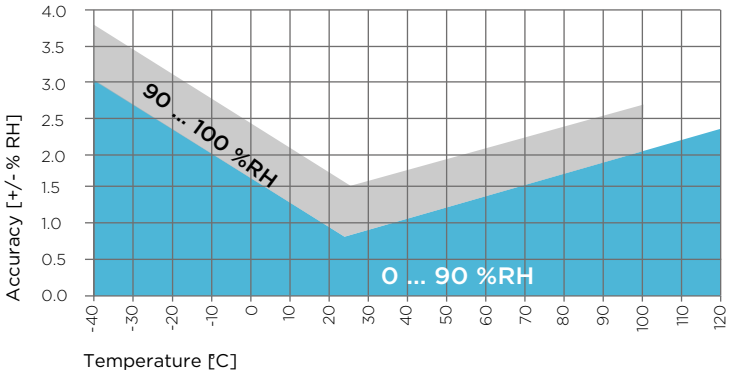

Figure 62 HMP9 humidity measurement accuracy as a function of temperature

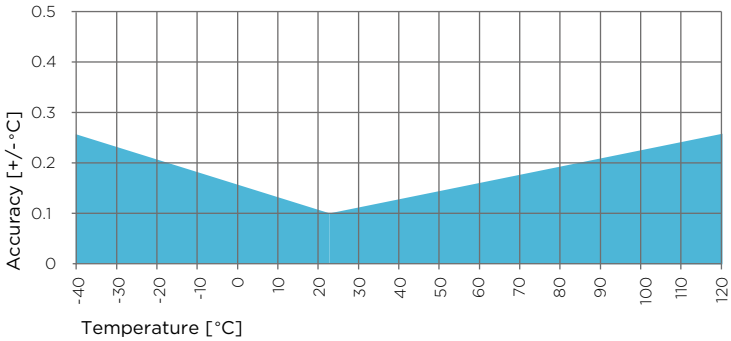

Figure 63 HMP9 temperature measurement accuracy over full range

Table 45 HMP9 operating environment

Property	Description/Value
Operating temperature of probe body	−40 ... +60 °C (−40 ... +140 °F)
Operating temperature of probe head	−40 ... +120 °C (−40 ... +248 °F)
Operating humidity of probe head	Max. +100 °C (212 °F) T_d
Storage temperature	−40 ... +60 °C (−40 ... +140 °F)
Operating environment	Suitable for outdoor use when protected from rain
Measurement environment	For air, nitrogen, hydrogen, argon, helium, and oxygen [1)]
IP rating of probe body	IP65: Dust-tight. Protected from water jets from any direction.

1) *Consult Vaisala if other chemicals are present. Consider safety regulations with flammable gases.*

Table 46 HMP9 inputs and outputs

Property	Description/Value
Operating voltage	15–30 V DC
Current consumption	5 mA typical, 400 mA max.
Digital output	RS-485, non-isolated
Default serial settings	19200 bps N 8 2
Protocol	Modbus RTU

Table 47 HMP9 output parameters

Output parameter name and unit	
Absolute humidity (g/m^3)	Relative humidity (%RH)
Absolute humidity at NTP (g/m^3)	Relative humidity (dew/frost) (%RH)
Dew point temperature (°C)	Temperature (°C)
Dew/frost point temperature (°C)	Water concentration (ppm$_v$)
Dew/frost point temperature at 1 atm (°C)	Water concentration (wet basis) (vol-%)
Dew point temperature at 1 atm (°C)	Water mass fraction (ppm$_w$)
Dew/frost point depression (°C)	Water vapor pressure (hPa)
Enthalpy (kJ/kg)	Water vapor saturation pressure (hPa)
Mixing ratio (g/kg)	Wet-bulb temperature (°C)

Table 48 HMP9 compliance

Property	Value/Description
EU directives and regulations	EMC Directive (2014/30/EU) RoHS Directive (2011/65/EU) as amended by 2015/863
Electromagnetic compatibility (EMC)	EN 61326-1, industrial environment
Compliance marks	CE, China RoHS, RCM

Table 49 HMP9 mechanical specifications

Property	Description/Value
Connector	M12 5-pin A-coded male
Weight (with a 2-m cable)	68 g (2.40 oz)
Probe cable length	2 m (6.56 ft)
Materials	
Probe	AISI 316L
Probe body	PBT
Cable overmolds	FEP

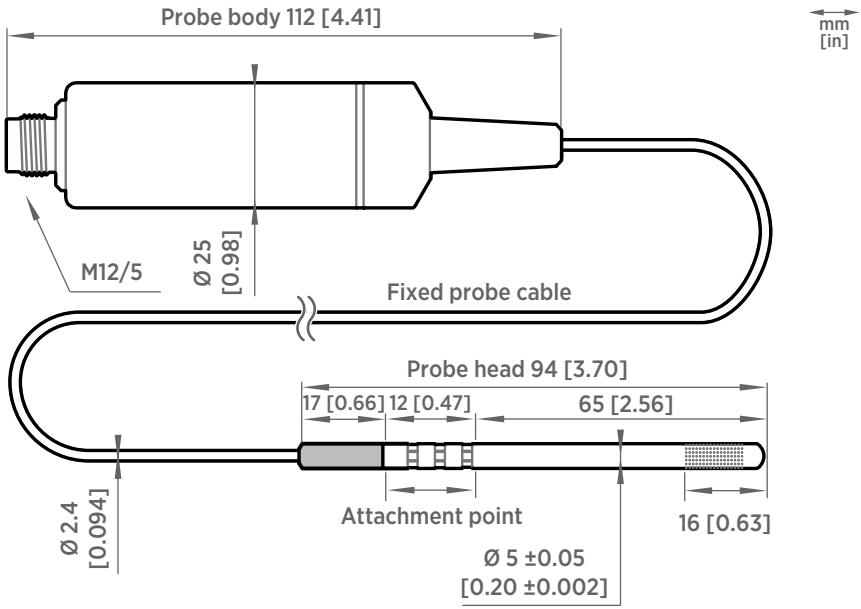

Figure 64 HMP9 probe dimensions

11.8 MMP8 specifications

Table 50 MMP8 measurement performance

Property	Description/Value
Water activity	
Measurement range	0–1 a_w
T_{90} response time [1)]	10 min
Sensor	HUMICAP® 180L2
Accuracy [2)]	±0.01 a_w (±1 %RS)
Water concentration in oil	
Typical accuracy	10 % of the reading
Temperature	
Measurement range	−40 ... +180 °C (−40 ... +356 °F)

Property	Description/Value
Accuracy at +20 °C (+68 °F)	±0.2 °C (0.36 °F)

1) *At +20 °C (+68 °F) in still oil.*
2) *In range 0–0.5 a_w, including non-linearity, hysteresis, and repeatability. See accuracy graph below.*

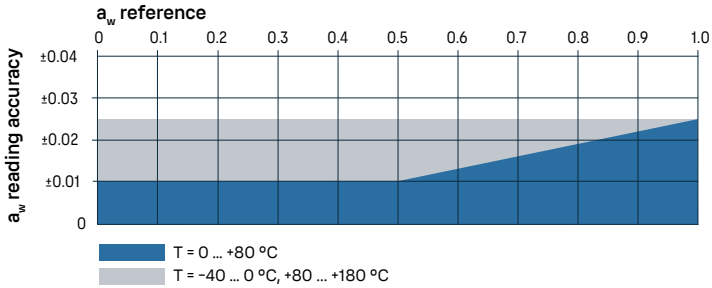

Figure 65 MMP8 A_w measurement accuracy

Table 51 MMP8 operating environment

Property	Description/Value
Operating temperature of probe head	−40 ... +180 °C (−40 ... +356 °F)
Operating temperature of probe body	−40 ... +80 °C (−40 ... +176 °F)
Storage temperature range	−40 ... +80 °C (−40 ... +176 °F)
Operating pressure range	0–40 bar (0–580 psi), absolute
Installation pressure	Up to 10 bar (145 psi), absolute
IP rating of probe body	IP66: Dust-tight. Protected from powerful water jets from any direction.
Ball valve	
Operating temperature	Up to +100 °C (+212 °F)
Operating pressure	Up to 40 bar (580 psi), absolute

Table 52 MMP8 inputs and outputs

Property	Description/Value
Operating voltage	15–30 V DC
Current consumption	10 mA typical

Property	Description/Value
Digital output	RS-485, non-isolated
Protocols	Modbus RTU
Output parameters	Relative saturation (%RS) Temperature (°C) Water activity Water concentration in oil (ppm_w)

Table 53 MMP8 compliance

Property	Value/Description
EU directives and regulations	EMC Directive (2014/30/EU) RoHS Directive (2011/65/EU) as amended by 2015/863
Electromagnetic compatibility (EMC)	EN 61326-1, industrial environment
Compliance marks	CE, China RoHS, RCM
Type approvals	DNV GL certificate no. TAA00002YT[1)]

1) *DNV GL certificate applies to the 262-mm-long MMP8 model only, not to the 448-mm-long model.*

Table 54 MMP8 mechanical specifications

Property	Description/Value
Connector	M12 5-pin A-coded male
Weight (with a 2-m cable)	262-mm-long MMP8: 510 g (18.0 oz) 448-mm-long MMP8: 610 g (21.5 oz)
Filter options	Stainless steel grid standard filter Stainless steel grid filter for high flow rates (> 1 m/s)
Probe cable length	2 m (6.56 ft)
Adjustable installation depth	262-mm-long MMP8: 35–193 mm (1.37–7.59 in) 448-mm-long MMP8: 35–379 mm (1.37–14.92 in)
Materials	
Probe	AISI 316L
Probe body	AISI 316L
Cable jacket	FEP

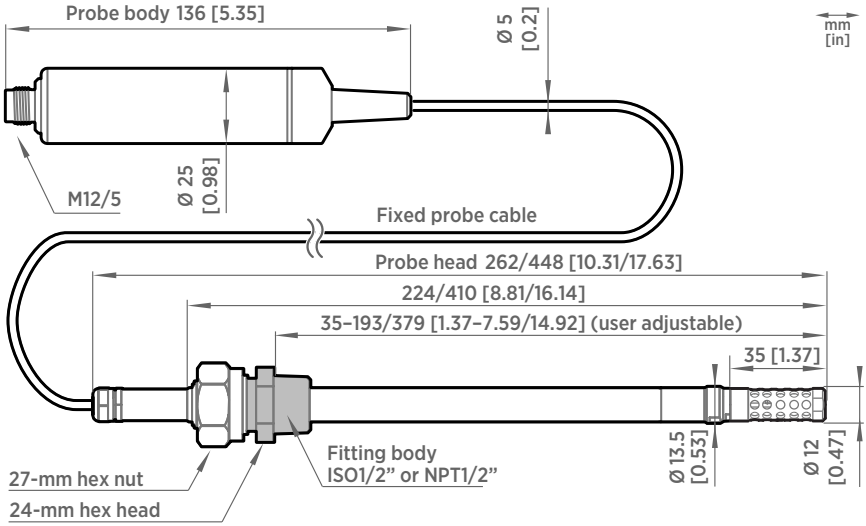

Figure 66 MMP8 dimensions

11.9 TMP1 specifications

Table 55 TMP1 measurement performance

Property	Description/Value
Measurement range	−70 ... +180 °C (−94 ... +356 °F)
Sensor	Pt100 RTD Class F0.1 IEC 60751
Standard calibration [1] [2]	
Accuracy at +23 °C (+73.4 °F)	±0.1 °C (±0.18 °F)
Factory calibration uncertainty [3]	±0.1 °C (±0.18 °F) at +23 °C (+73.4 °F)
Optional ISO 17025 calibration [4] [2]	
Accuracy at +23 °C (+73.4 °F) [1]	±0.06 °C (±0.108 °F)

Property	Description/Value
Calibration uncertainty [3)]	±0.03 °C (±0.054 °F)

1) *Defined against calibration reference. Including non-linearity, hysteresis, and repeatability.*
2) *Exposing temperature sensor to temperatures outside −20 ... +150 °C (−4 ... +302 °F) may cause permanent additional deviation of ±0.1 °C (0.18 °F)*
3) *Defined as ±2 standard deviation limits. Small variations possible; see calibration certificate.*
4) *Accuracy depends on selected calibration points. Accuracy with ISO 17025 calibration is defined here using a 5-point calibration in the following points: −30, −10, 0, +30, and +60 °C. For more information on calibration services offered by Vaisala, see vaisala.com/calibration.*

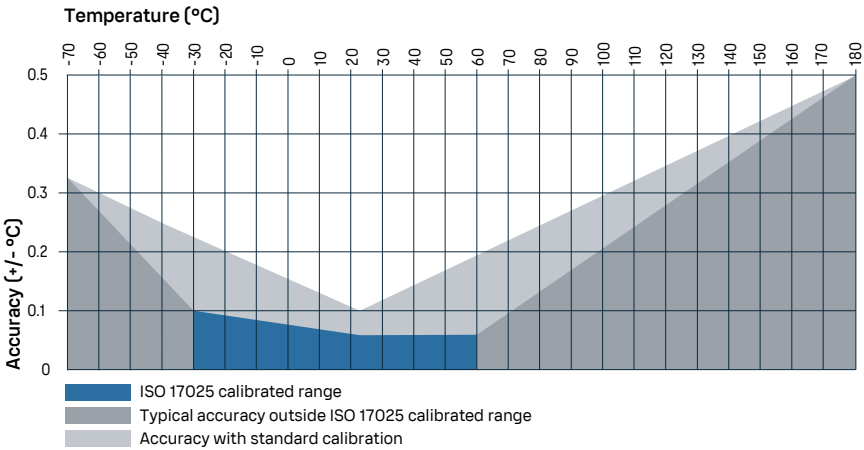

Figure 67 TMP1 temperature measurement accuracy over full range

Table 56 TMP1 operating environment

Property	Description/Value
Operating temperature of probe body	−40 ... +80 °C (−40 ... +176 °F)
Operating temperature of probe head	−70 ... +180 °C (−94 ... +356 °F)
Storage temperature	−40 ... +80 °C (−40 ... +176 °F)
Operating environment	Suitable for outdoor use
IP rating	
Probe body	IP66: Dust-tight. Protected from powerful water jets from any direction.

Property	Description/Value
Probe head and cable	IPX8/IPX9: Protected against high pressure and temperature water jets. Protected from the effects of continuous immersion in water. Tested under the following conditions: • Immersion depth: 150 cm (59 in) • Immersion time: 60 min

Table 57 TMP1 inputs and outputs

Property	Description/Value
Operating voltage	15–30 V DC
Current consumption	10 mA typical
Digital output	RS-485, non-isolated
Protocols	Modbus RTU
Output parameters	Temperature (°C) Water vapor saturation pressure (hPa)

Table 58 TMP1 compliance

Property	Value/Description
EU directives and regulations	EMC Directive (2014/30/EU) RoHS Directive (2011/65/EU) as amended by 2015/863
Electromagnetic compatibility (EMC)	EN 61326-1, industrial environment
Type approvals	DNV GL certificate no. TAA00002YT
Compliance marks	CE, China RoHS, RCM

Table 59 TMP1 mechanical specifications

Property	Description/Value
Connector	M12 5-pin A-coded male
Weight (with a 2-m cable)	224 g (7.9 oz)
Probe cable length	2 m (6.56 ft) or 10 m (32.8 ft)
Materials	
Probe	AISI 316L
Probe body	AISI 316L

Property	Description/Value
Cable jacket	FEP

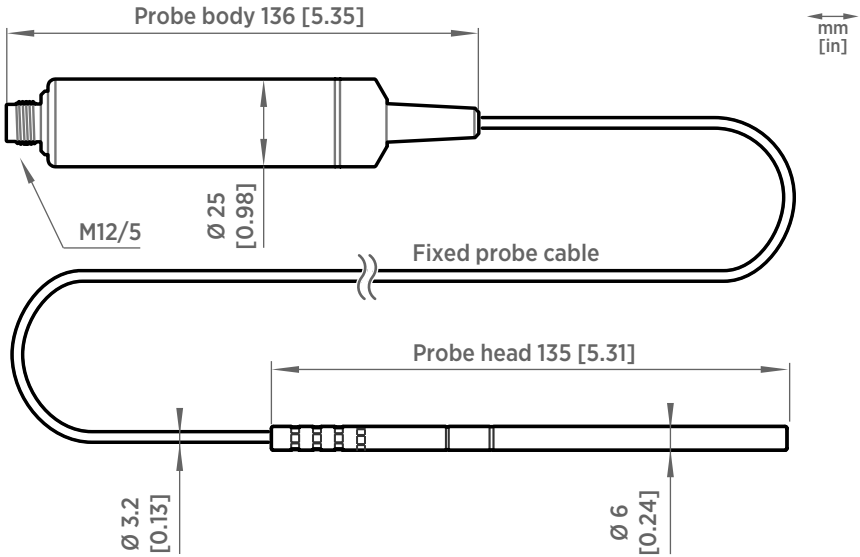

Figure 68 TMP1 probe dimensions

11.10 Accessories and spare parts

Information on spare parts, accessories, and calibration products is available online at vaisala.com and store.vaisala.com.

Connection cables

Table 60 Connection cables

Description	Item code
Connection cable, M12-5F - M12-5M, 1 m	INDIGOCABLE1M
Connection cable, M12-5F - M12-5M, 3 m	INDIGOCABLE3M
Connection cable, M12-5F - M12-5M, 5 m	INDIGOCABLE5M
Connection cable, M12-5F - M12-5M, 10 m	INDIGOCABLE10M

Description	Item code
Connection cable, M12-5F - open wires, 0.3 m	CBL210896-03MSP
Connection cable, M12-5F - open wires, 1 m	CBL210896-1MSP
Connection cable, M12-5F - open wires, 3 m	CBL210896-3MSP
Connection cable, M12-5F - open wires, 5 m	CBL210896-5MSP
Connection cable, M12-5F - open wires, 10 m	CBL210896-10MSP
Connection cable, M12-5F - open wires, 1.5 m	223263SP
Connection cable, M12-5F - open wires, 10 m	216546SP
Connection cable, M12-5F 90° - open wires, 0.6 m	244669SP
Flat cable, M12-5F - M12-5M, 1 m	CBL210493SP
Connection cable for Indigo80, M12-5F - M12-5M, 1.5 m	272075SP
Vaisala Indigo USB adapter [1)]	USB2

1) Vaisala Insight software for Windows available at www.vaisala.com/insight

HMP3

Table 61 HMP3 accessories

Description	Item code
Duct installation kit for humidity probe	210697
Solar radiation shield DTR502B	DTR502B
Cable gland M20×1.5 with split seal	HMP247CG
Magnetic probe holder for Ø 12 mm probe heads [1)]	ASM213382SP

1) Not suitable for use at extreme temperatures.

Table 62 HMP3 spare parts

Description	Item code
Sensors	
HUMICAP® R2	HUMICAPR2
Filters	
Sintered stainless steel filter	HM47280SP

Description	Item code
Stainless steel grid filter	HM47453SP
Metallized PPS plastic grid filter	DRW010276SP
Metallized PPS plastic grid with stainless steel mesh filter	DRW010281SP

HMP4

Table 63 HMP4 spare parts

Description	Item code
Sintered stainless steel filter	HM47280SP
Stainless steel grid	HM47453SP
Metallized PPS plastic grid with stainless steel mesh filter	DRW010281SP
Metallized PPS plastic grid filter	DRW010276SP
Fitting body M22×1.5	17223SP
Fitting body NPT 1/2″	17225SP

HMP5

Table 64 HMP5 accessories

Description	Item code
Mounting flange	210696
Calibration adapter for HMK15	211302SP

Table 65 HMP5 spare parts

Description	Item code
Sintered stainless steel filter	HM47280SP
Stainless steel grid	HM47453SP
Metallized PPS plastic grid with stainless steel mesh filter	DRW010281SP
Metallized PPS plastic grid filter	DRW010276SP

HMP7

Table 66 HMP7 accessories

Description	Item code
Duct installation kit for humidity probe	210697
Solar radiation shield DTR502B	DTR502B
Warmed probe accessory	HMT330WPA
Cable gland M20×1.5 with split seal	HMP247CG
Swagelok® for 12 mm probe, 1/2″ ISO thread	SWG12ISO12
Swagelok® for 12 mm probe, 3/8″ ISO thread	SWG12ISO38
Swagelok® for 12 mm probe, 1/2″ NPT thread	SWG12NPT12
Magnetic probe holder for Ø 12 mm probe heads 1)	ASM213382SP
Calibration adapter for HMK15	211302SP

1) Not suitable for use at extreme temperatures.

Table 67 HMP7 spare parts

Description	Item code
Sintered stainless steel filter	HM47280SP
Stainless steel grid	HM47453SP
Metallized PPS plastic grid with stainless steel mesh filter	DRW010281SP
Metallized PPS plastic grid filter	DRW010276SP
Membrane stainless steel filter for fuel cell applications	214848SP

HMP8

Table 68 HMP8 accessories

Description	Item code
Ball valve kit ISO 1/2″ with welding joint	BALLVALVE-1
Calibration adapter for HMK15	211302SP

Description	Item code
Weatherproof carrying case for Indigo80 and a series 8 probe [1)]	ASM215318

1) For example, MMP8, HMP8, or DMP8 with a max. 2-m (6.6-ft) probe connection cable.

Table 69 HMP8 spare parts

Description	Item code
Sintered stainless steel filter	HM47280SP
Stainless steel grid	HM47453SP
Metallized PPS plastic grid with stainless steel mesh filter	DRW010281SP
Metallized PPS plastic grid filter	DRW010276SP
Fitting body NPT 1/2″	212810SP
Fitting body ISO R 1/2″	DRW212076SP
Thread adapter ISO 1/2″ to NPT 1/2″	210662SP
Manual pressing handle	HM36854SP

HMP9

Table 70 HMP9 accessories

Description	Item code(s)
HMP9 calibration adapter for HMK15	ASM213801
HMP9 duct installation kit	ASM214055
Solar radiation shield DTR502B with sensor head support 215130	DTR502B and 215130

Table 71 HMP9 spare parts

Description	Item code(s)
Gland set	ASM213199

MMP8

Table 72 MMP8 accessories

Description	Item code
Ball valve kit ISO 1/2″ with welding joint	BALLVALVE-1
Ball valve kit ISO 1/2″ – ISO 3/4″ with thread joint	BALLVALVE-2
Calibration adapter for HMK15	211302SP
Weatherproof carrying case for Indigo80 and a series 8 probe [1)]	ASM215318

1) For example, MMP8, HMP8, or DMP8 with a max. 2-m (6.6-ft) probe connection cable.

Table 73 MMP8 spare parts

Description	Item code
Stainless steel grid filter	HM47453SP
Stainless steel grid filter for high flow rates (> 1 m/s)	220752SP
Fitting body NPT 1/2″	212810SP
Fitting body ISO R 1/2″	DRW212076SP
Manual pressing handle	HM36854SP

TMP1

Table 74 TMP1 accessories

Description	Item code
Duct installation kit for temperature probe	215003
Swagelok® for 6 mm probe, 1/8″ ISO thread	SWG6ISO18
Swagelok® for 6 mm probe, 1/8″ NPT thread	SWG6NPT18

11.11 Accuracy of calculated output parameters

HMP series probes measure relative humidity and temperature, and calculate the other output parameters from those two parameters. Accuracy of the calculated parameters is derived from the accuracy of the original RH and T measurements.

Use the Vaisala Humidity Calculator to convert the accuracy specification of RH measurement for other humidity parameters. You can download it from vaisala.com.

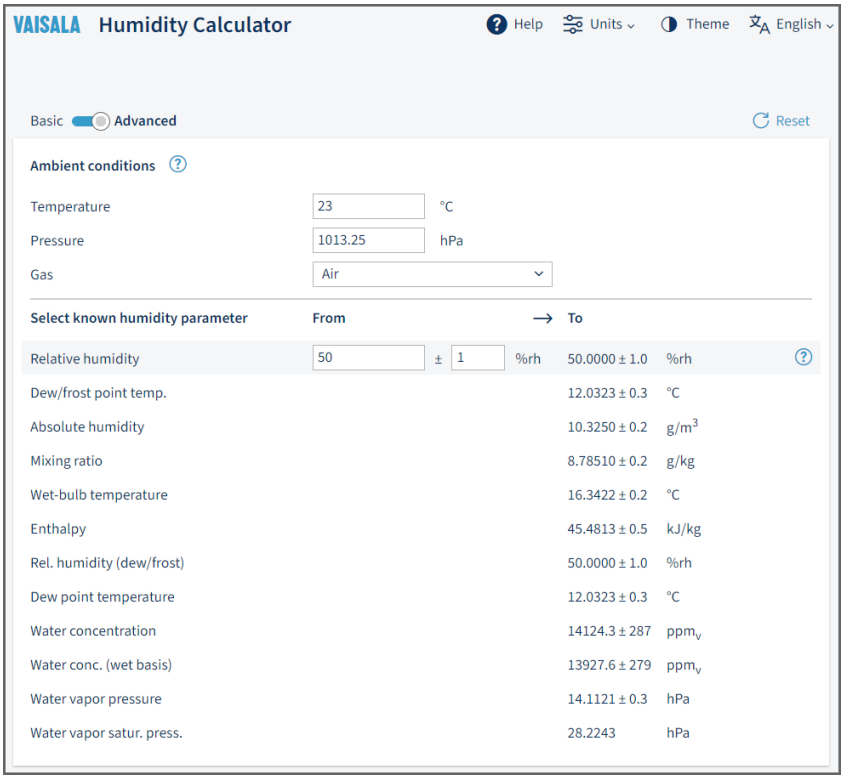

Figure 69 Vaisala Humidity Calculator in Advanced mode

Appendix A. Modbus reference

A.1 Default communication settings

Table 75 Default Modbus serial communication settings

Property	Description/Value
Serial bit rate	19200
Parity	None
Number of data bits	8
Number of stop bits	2
Flow control	None
Modbus device address	240

You can use up to ten probes on the same RS-485 line. You must configure each probe on the line to have a different Modbus address.

A.2 Function codes

Table 76 Modbus function codes

Function code (decimal)	Function code (hexadecimal)	Name	Notes
03	0x03	Read Holding Registers	Class 0
16	0x10	Write Multiple Registers	Class 0
43 / 14	0x2B / 0x0E	Read Device Identification	

A.3 Data encoding

In the data registers, the numeric values are available in one or two formats with separate register addresses: 32-bit IEEE floating point format and/or 16-bit signed integer format.

For values that have both 32-bit and 16-bit register available, use of the 32-bit register is recommended. Some values may exceed the signed 16-bit range even in normal operation.

A.3.1 32-bit floating point or 32-bit integer format

Registers using **32-bit float** data format are encoded using the **binary32** encoding defined in IEEE 754. The format is also known as "single-precision floating point format".

The least significant 16 bits of a floating point number are placed at the Modbus register listed in the table, while the most significant 16 bits are placed in the register with number/address + 1, as specified in Open Modbus TCP Specification, Release 1.0. This is also known as "little-endian" or "Modicon" word order.

Despite the specification, some Modbus masters may expect a "big-endian" word order (most significant word first). In such case, you must select "word-swapped" floating point format in your Modbus master for the Modbus registers of the device.

A complete 32-bit floating point or 32-bit integer value should be read and written in a single Modbus transaction.

CAUTION! Reading the measurement data registers with incorrect floating point format setting may occasionally result in correct-looking, but nevertheless incorrect values.

It is highly recommended to verify that you have configured the floating point format correctly on your Modbus host system by reading a floating point value from a test value register.

A.3.2 16-bit integer format

Some 16-bit integer values in the data registers are scaled to include the necessary decimals. The scaling factors for those values are shown in the register tables.

Table 77 Interpretation of 16-bit signed integer values

Value (decimal)	Value (hexadecimal)	Description
0–32766	0x0000–0x7FFE	Value in range 0–32766
32767	0x7FFF	Value is 32767 or larger
32768	0x8000	Value is not available
32769	0x8001	Value is −32767 or smaller
32770–65535	0x8002–0xFFFF	Value in range −32766 ... −1 (2's complement)

A.4 Modbus registers

Registers are numbered in decimal, starting from 1. Register addresses in actual Modbus messages (Modbus Protocol Data Unit (PDU)) are in hexadecimal and start from zero. Register number 1 corresponds to address 0x0 in the actual Modbus message.

CAUTION! Reading the wrong register(s) may result in correct-looking values. Check the reference documentation of your Modbus host (PLC) to verify which notation it uses for Modbus register addresses.

A.4.1 Measurement data registers

Table 78 Floating point measurement data registers (read-only)

Register number	Address	Description	Data format	Unit
1	0x0000	Relative humidity	32-bit float	%RH
3	0x0002	Temperature	32-bit float	°C
7	0x0006	Dew point temperature	32-bit float	°C
9	0x0008	Dew/frost point temperature	32-bit float	°C
11	0x000A	Dew/frost point temperature at 1 atm	32-bit float	°C
13	0x000C	Dew point temperature at 1 atm	32-bit float	°C
15	0x000E	Absolute humidity	32-bit float	g/m^3
17	0x0010	Mixing ratio	32-bit float	g/kg
19	0x0012	Wet-bulb temperature	32-bit float	°C
21	0x0014	Water concentration	32-bit float	ppm_v
23	0x0016	Water vapor pressure	32-bit float	hPa
25	0x0018	Water vapor saturation pressure	32-bit float	hPa
27	0x001A	Enthalpy	32-bit float	kJ/kg
29	0x001C	Water activity	32-bit float	
31	0x001E	Dew/frost point depression	32-bit float	°C
33	0x0020	Absolute humidity at NTP	32-bit float	g/m^3
35	0x0022	Water concentration in oil	32-bit float	ppm_w
41	0x0028	Relative saturation	32-bit float	%RS
43	0x002A	Water concentration (wet basis)	32-bit float	vol-%
45	0x002C	Relative humidity (dew/frost)	32-bit float	%RH

Register number	Address	Description	Data format	Unit
65	0x0040	Water mass fraction	32-bit float	ppm_w

Table 79 Integer measurement data registers (read-only)

Register number	Address	Description	Data format	Scale factor	Offset	Unit
257	0x0100	Relative humidity	16-bit signed integer	100	0	%RH
258	0x0101	Temperature	16-bit signed integer	100	0	°C
260	0x0103	Dew point temperature	16-bit signed integer	100	0	°C
261	0x0104	Dew/frost point temperature	16-bit signed integer	100	0	°C
262	0x0105	Dew/frost point temperature at 1 atm	16-bit signed integer	100	0	°C
263	0x0106	Dew point temperature at 1 atm	16-bit signed integer	100	0	°C
264	0x0107	Absolute humidity	16-bit signed integer	100	0	g/m^3
265	0x0108	Mixing ratio	16-bit signed integer	100	0	g/kg
266	0x0109	Wet-bulb temperature	16-bit signed integer	100	0	°C
267	0x010A	Water concentration	16-bit signed integer	1	0	ppm_v
268	0x010B	Water vapor pressure	16-bit signed integer	10	0	hPa
269	0x010C	Water vapor saturation pressure	16-bit signed integer	10	0	hPa
270	0x010D	Enthalpy	16-bit signed integer	100	0	kJ/kg
271	0x010E	Water activity	16-bit signed integer	10000	0	-
272	0x010F	Dew/frost point depression	16-bit signed integer	10	0	°C
273	0x0110	Absolute humidity at NTP	16-bit signed integer	100	0	g/m^3

Register number	Address	Description	Data format	Scale factor	Offset	Unit
274	0x0111	Water concentration in oil	16-bit signed integer	1	0	ppm_w
277	0x0114	Relative saturation	16-bit signed integer	100	0	%RS
278	0x0115	Water concentration (wet basis)	16-bit signed integer	100	0	vol-%
279	0x0116	Relative humidity (dew/frost)	16-bit signed integer	100	0	%RH
289	0x0120	Water vapor mass fraction	16-bit signed integer	1	0	ppm_w

A.4.2 Configuration registers

Table 80 Modbus configuration data registers (writable)

Register number	Address	Description	Data format	Unit/Valid range
General				
1287	0x0506	Condensation prevention on/off. Enables the condensation prevention heating functions of the device. When warming is active, values of output parameters that depend on temperature measurement (for example, relative humidity) are unavailable unless temperature is written to register 0x0334 from an external source.	16-bit boolean	0 = off (default) 1 = on
Compensation setpoints				
769	0x0300	Pressure compensation setpoint The entered value is persistent and remains unchanged at device restart.	32-bit float	Unit: hPa Default: 1013.25 hPa

Compensation setpoints				
821	0x0334	Temperature compensation setpoint. If a value is written to this register, probe uses it instead of its own temperature measurement. When condensation prevention warming is active, temperature must be written to this register to enable output parameters that depend on temperature measurement (for example, relative humidity). At device reset, the value is cleared.	32-bit float	Unit: °C
Sensor purge				
773	0x0304	Sensor purge interval	32-bit float	Unit: min 10 ... 14400
1283	0x0502	Interval purge on/off	16-bit boolean	0 = Off 1 = On
1284	0x0503	Startup purge on/off	16-bit boolean	0 = Off 1 = On
Filtering				
795	0x031A	Measurement filtering factor	32-bit float	Range: 0.000 ... 1.000 1.000 = Reading shows 100% of the most recent measured value (no filtering, default) 0.01 ... 0.99 = Reading shows 1 ... 99% of the most recent measured value and part of the previous reading (filtering is applied). For example, "0.9" means that the filtered measurement reading = 90% of the most recent measured value + 10% of the previous reading.

Filtering				
1282	0x0501	Enable of disable measurement filtering using the user-defined filtering factor (register $031A_{hex}$)	16-bit boolean	0 = Off 1 = On
Communication				
1537	0x0600	Modbus address	16-bit integer	1 ... 247 Default: 240
1538	0x0601	Bit rate	enum	0 = 300 1 = 600 2 = 1200 3 = 2400 4 = 4800 5 = 9600 6 = 19200 7 = 38400 8 = 57600 9 = 115200
1539	0x0602	Parity, data, stop bits	enum	0 = None, 8, 1 1 = None, 8, 2 2 = Even, 8, 1 3 = Even, 8, 2 4 = Odd, 8, 1 5 = Odd, 8, 2 (default: 1 = None, 8, 2)
1540	0x0603	Response delay	16-bit integer	Unit: ms Range: 0 ... 1000

Table 81 Modbus function registers (writable)

Register number	Address	Description	Data format	Unit/Valid range
Functions				
1285	0x0504	Start sensor purge	16-bit integer	When writing to register: 1 = Start sensor purge When sensor purge is in progress, the value of the register will count up from 0 to 100. When the value reaches 100 the sensor purge is complete.
1542	0x0605	Restart device	16-bit integer	When writing to register: 1 = Restart the device

A.4.3 Status registers

Table 82 Modbus status data registers (read-only)

Register number	Address	Description	Data format	Note
513	0x0200	Error status	16-bit boolean	**0x0000**: One or more errors active **0x0001**: No errors
514	0x0201	Online status	16-bit boolean	**0x0000**: Output locked **0x0001**: Online data available
516	0x0203	Error code	32-bit signed integer	See Table 83 (page 142).
518	0x0205	Security hash	32-bit signed integer	Security hash changes when any change is made to device settings or adjustments.

Register number	Address	Description	Data format	Note
520	0x0207	RH measurement status	16-bit signed integer	**0x0000**: Status OK **0x0001**: Measurement is not available **0x0002**: Measurement is not reliable **0x0004**: Under range **0x0008**: Over range **0x0020**: Value locked **0x0080**: Sensor failure **0x0100**: Measurement is not ready
521	0x0208	T measurement status	16-bit signed integer	
522	0x0209	$T_{d/f}$ measurement status	16-bit signed integer	
523	0x020A	Device status	16-bit signed integer	**0x0000**: Status OK **0x0001**: Critical error, maintenance needed **0x0002**: Error, device may recover automatically **0x0004**: Warning **0x0008**: Notification **0x0010**: Calibration mode active

Table 83 Error codes in register 0x0203

Bitmask	Error message	Severity
0x0000	Status OK	
0x0001	Temperature measurement error	Error
0x0002	Humidity measurement error	Error
0x0004	Humidity sensor failure	Error
0x0008	Capacitance reference error	Error
0x0010	Ambient temperature out of range	Error
0x800000	Sensor heater failure	Warning

A.4.4 Test value registers

Read the known test values from the test registers to verify the functionality of your Modbus implementation.

Table 84 Modbus test registers (read-only)

Register number	Address	Description	Data format	Test value
7937	0x1F00	Signed integer	16-bit integer	-12345
7938	0x1F01	Floating point	32-bit float	-123.45
7940	0x1F03	Text string	7-character ASCII string	Text string "-123.45"

A.5 Device identification objects

Table 85 Device identification objects

Object ID	Object ID (hexadecimal)	Object name	Example contents
0	0x00	VendorName	"Vaisala"
1	0x01	ProductCode	"HMP4"
2	0x02	MajorMinorVersion	"1.2.3" Software version of the device.
3	0x03	VendorUrl	"http://www.vaisala.com/"
4	0x04	ProductName	"Humidity and Temperature Probe HMP4"
5	0x05	ModelName	"7E2A2A0A000" Configuration code of the device. Length and content of the code are model-specific.
6	0x06	UserApplicationName	User definable information text (see configuration register 0x0A00)
128	0x80	SerialNumber [1)]	"K0710040"
129	0x81	CalibrationDate [1)]	"2020-01-31" Calibration date in YYYY-MM-DD format. Empty string if not set/valid.

Object ID	Object ID (hexadecimal)	Object name	Example contents
130	0x82	CalibrationText [1)]	"Vaisala/HEL" Calibration information text. Empty string if not set/valid.

1) Vaisala-specific device information.

A.6 Exception responses

Table 86 Modbus exception responses

Code	Name	Reason
01	Illegal function	Unsupported function code
02	Illegal data address	Register address or Object ID out of valid ranges
03	Illegal data value	Otherwise invalid request

Accessing unavailable (temporarily missing) measurement data does not generate a Modbus exception. “Unavailable” value (a quiet NaN for floating point data or 0x8000 for integer data) is returned instead. An exception is generated only for any access outside the applicable register ranges.

A.7 Modbus communication examples

Reading relative humidity value

Device address used in the following examples is 240 (0xF0).
Measurement values returned by the device change depending on ambient conditions and/or device settings.

Request		Response	
Bytes on the line (hexadecimal)	**Description**	**Bytes on the line (hexadecimal)**	**Description**
(silence for 3.5 bytes)	Start of Modbus RTU frame	(silence for 3.5 bytes)	Start of Modbus RTU frame
0xF0	Probe address	0xF0	Probe address
0x03	Function (Read Holding Registers)	0x03	Function (Read Holding Registers)
0x00	Register address	0x04	Number of data bytes
0x00		0x7A	Value of first register (least significant word)
0x00	Number of 16-bit registers to read (2)	0xE1	
0x02		0x41	Value of second register (most significant word)
$D1_{hex}$	Modbus RTU checksum	0xF4	
$2A_{hex}$		0x62	Modbus RTU checksum
(silence for 3.5 bytes)	End of Modbus RTU frame	0x05	
		(silence for 3.5 bytes)	End of Modbus RTU frame

Communication description	
Register address	1 (1-based Modbus documentation format) = 0x0000 (0-based format used in actual communication).
Data format	Two 16-bit Modbus registers interpreted as IEEE 754 binary32 floating point value, least significant word first.
Returned value	0x41F47AE1, which is binary32 representation of 30.56 (%RH).

Writing pressure compensation value

Request		Response	
Bytes on the line (hexadecimal)	**Description**	**Bytes on the line (hexadecimal)**	**Description**
(silence for 3.5 bytes)	Start of Modbus RTU frame	(silence for 3.5 bytes)	Start of Modbus RTU frame
0xF0	Probe address	0xF0	Probe address
0x10	Function (Write Multiple Registers)	0x10	Function (Write Multiple Registers)
0x03	Register address	0x03	Register address
0x00		0x00	
0x00	Number of registers to write (2)	0x00	Number of 16-bit registers written (2)
0x02		0x02	
0x04	Number of data bytes	0x54	Modbus RTU checksum
0x6E	Value for first register (least significant word)	0xAD	
0x14			
0x44	Value for second register (least significant word)	(silence for 3.5 bytes)	End of Modbus RTU frame
0x75			
0x4E	Modbus RTU checksum	The response to a write function informs that the function was correctly received by the device. It does not guarantee that the written value was accepted by the device (for example, in case out-of-range values). To verify that the value was really accepted by the device, read the register value after writing.	
0xAB			
(silence for 3.5 bytes)	End of Modbus RTU frame		

Communication description	
Register address	769 (1-based Modbus documentation format) = 0x0300 (0-based format used in actual communication).

Communication description	
Data format	Two 16-bit Modbus registers interpreted as IEEE 754 binary32 floating point value, least significant word first.
Value to write	0x44756E14 = 981.72 (hPa)

Maintenance and calibration services

Vaisala offers comprehensive customer care throughout the life cycle of our measurement instruments and systems. Our factory services are provided worldwide with fast deliveries. For more information, see vaisala.com/calibration.

- Vaisala Online Store at store.vaisala.com is available for most countries. You can browse the offering by product model and order the right accessories, spare parts, or maintenance and calibration services.
- To contact your local maintenance and calibration expert, see vaisala.com/contactus.

Warranty

For standard warranty terms and conditions, see vaisala.com/warranty.
Please observe that any such warranty may not be valid in case of damage due to normal wear and tear, exceptional operating conditions, negligent handling or installation, or unauthorized modifications. Please see the applicable supply contract or Conditions of Sale for details of the warranty for each product.

Technical support

Contact Vaisala technical support at helpdesk@vaisala.com. Provide at least the following supporting information as applicable:

- Product name, model, and serial number
- Software/Firmware version
- Name and location of the installation site
- Name and contact information of a technical person who can provide further information on the problem

For more information, see vaisala.com/support.

Recycling

Recycle all applicable material according to local regulations.

VAISALA

www.vaisala.com

AKRIBIS · www.akribis.info · contacto@akribis.info