USER GUIDE

HM40

Vaisala · Authorized Partner

Distributed by AKRIBIS

M211088EN-D

User Guide

HUMICAP® Hand-Held Humidity and Temperature Meter

HM40 Series

VAISALA

AKRIBIS · www.akribis.info · contacto@akribis.info

PUBLISHED BY

Vaisala Oyj
Vanha Nurmijärventie 21, FI-01670 Vantaa, Finland
P.O. Box 26, FI-00421 Helsinki, Finland
+358 9 8949 1
vaisala.com
docs.vaisala.com

© Vaisala 2026

No part of this document may be reproduced, published, or publicly displayed in any form or by any means, electronic or mechanical (including photocopying), nor may its contents be modified, translated, adapted, sold, or disclosed to a third party without prior written permission of the copyright holder. Translated document and translated portions of the document are based on the original English version. Parts of the translation may have been created using machine-assisted translation. In ambiguous cases, the English version is applicable, not the translation.

The contents of this document are subject to change without prior notice.

Local rules and regulations applicable to the products and services may vary, and they shall take precedence over the information contained in this document. Vaisala makes no representations on this document's compliance with the local rules and regulations applicable at any given time, and hereby disclaims any and all responsibilities related thereto. You are instructed to confirm the applicability of the local rules and regulations and their effect on the intended use of the products and services.

This document does not create any legally binding obligations for Vaisala towards customers or end users. All legally binding obligations are set forth exclusively in the applicable contract or in the relevant set of General Conditions of Vaisala (vaisala.com/policies).

Table of contents

1. About this document ... 9
1.1 Version information ... 9
1.2 Related manuals ... 9
1.3 Documentation conventions ... 9
1.4 Trademarks ... 10

2. Product overview ... 11
2.1 Introduction to HM40 ... 11
2.1.1 HM41 ... 12
2.1.2 HM42 for tight spaces ... 14
2.1.3 HM45 remote probe with handle ... 15
2.1.4 HM46 for mechanically demanding applications ... 17
2.2 Parameters ... 17
2.3 Application examples ... 18
2.4 Batteries ... 22
2.5 Accessories and parts ... 22
2.6 Safety ... 23

3. HM40 menus and views ... 25
3.1 Display layout and control buttons ... 25
3.1.1 Indicators ... 26
3.1.2 Numeric view ... 27
3.1.3 Statistics view ... 28
3.1.4 Graph view ... 30
3.1.5 Hold and tag ... 32
3.2 Main menu ... 34
3.3 Tagged points menu ... 35
3.4 Graph duration menu ... 37
3.5 Settings menu ... 38
3.5.1 Language settings ... 38
3.5.2 Units settings ... 39
3.5.3 Time & Date settings ... 40
3.5.4 Pressure setup settings ... 42
3.5.5 Reminder settings ... 42
3.5.6 Backlight settings ... 44
3.5.7 Battery settings ... 44
3.5.8 Power off settings ... 44
3.5.9 Navigation settings ... 45
3.5.10 Rounding settings ... 45
3.5.11 Factory settings ... 45
3.6 Calibration menu ... 46
3.7 Help menu ... 46

4. Using HM40 ... 48
4.1 First start-up ... 48

4.2 Initial settings....48
4.3 Basic measuring steps with HM40....48
4.4 Charging HM40....50

5. Maintenance and troubleshooting....51
5.1 Cleaning....51
5.2 Changing filter....51
5.3 Changing probe....52
5.4 Calibration....53
5.4.1 Calibrating HM40 using HMK15....53
5.5 Troubleshooting checklist....58

6. Technical data....59
6.1 HM40 Handheld Humidity and Temperature Meter Series....59
6.2 HM40 Series Technical Data....66

7. Vaisala services....70
7.1 Service centers....70
7.2 Technical support....70
7.3 Warranty....70

Online store....73

Recycling....73

List of figures

Figure 1 HM41, front....12
Figure 2 HM41, back....13
Figure 3 HM42....14
Figure 4 HM45 remote probe with handle....15
Figure 5 Connecting HM45 handle to belt clip....16
Figure 6 HM46 for mechanically demanding applications....17
Figure 7 HM41 application example....19
Figure 8 HM42 application example....20
Figure 9 HM42 application example....20
Figure 10 HM42 application example....21
Figure 11 HM46 application example....21
Figure 12 Display layout and control buttons....25
Figure 13 Numeric view....27
Figure 14 Numeric view, all parameters....28
Figure 15 Statistics view....28
Figure 16 Statistics view, all parameters....29
Figure 17 Graph view....30
Figure 18 Graph view, measurements....30
Figure 19 Changing timescale....31
Figure 20 Graph view, all parameters....31
Figure 21 Tagged points....32
Figure 22 Tagged points measurement values....33
Figure 23 Hold view....33
Figure 24 Main menu....34
Figure 25 Tagged points....35
Figure 26 Tagged points parameter values....35
Figure 27 Data stored for each tagged point....36
Figure 28 Graph duration....37
Figure 29 Settings menu....38
Figure 30 Language settings....38
Figure 31 Units menu....39
Figure 32 Time & Date settings....40
Figure 33 Date setup menu....40
Figure 34 Time setup menu....41
Figure 35 Pressure setup settings....42
Figure 36 Reminder settings....42
Figure 37 Calibration reminder....43
Figure 38 Backlight settings....44
Figure 39 Factory settings menu....45
Figure 40 Calibration menu....46
Figure 41 Help menu....46
Figure 42 Help menu, device information....47
Figure 43 Graph view....49

Figure 44 HM41 dimensions in mm.....60
Figure 45 HM42 dimensions in mm.....62
Figure 46 HM45 dimensions in mm.....64
Figure 47 HM46 dimensions in mm.....66

List of tables

Table 1 Document versions (English)....9
Table 2 Related manuals....9
Table 3 HM40 parameters....17
Table 4 Filters....22
Table 5 Indicators....26
Table 6 Icons in Statistics view....29
Table 7 HM41 technical data....59
Table 8 HM42 technical data....61
Table 9 HM45 technical data....63
Table 10 HM46 technical data....65
Table 11 HM40 Series measurement performance....66
Table 12 HM40 Series operating environment....67
Table 13 HM40 Series indicator....67
Table 14 HM40 Series compliance....67
Table 15 HM40 Series spare parts and accessories....68
Table 16 HM40 Series mechanical specifications....69

1. About this document

1.1 Version information

This document provides instructions for using HM40 Series HUMICAP® Hand-Held Humidity and Temperature Meter.

Table 1 Document versions (English)

Document code	Date	Description
M211088EN-D	February 2026	The document has been restructured. Brand-related updates. Added information about Vaisala Services. Updated sections: • Calibrating HM40 using HMK15 (page 53) • HM40 Handheld Humidity and Temperature Meter Series (page 59) • HM40 Series Technical Data (page 66)
M211088EN-C	2014	Previous version, uses an earlier template.

1.2 Related manuals

For the latest versions of these documents, see docs.vaisala.com.

Table 2 Related manuals

Document code	Name
M210185EN	Vaisala HMK15 Humidity Calibrator User Guide

1.3 Documentation conventions

WARNING! Alerts you to a serious hazard. If you do not read and follow instructions carefully at this point, there is a risk of injury or even death.

CAUTION! Alerts you to a potential hazard. If you do not read and follow instructions carefully at this point, the product could be damaged or important data could be lost.

Highlights important information on using the product.

Gives information for using the product more efficiently.

Lists tools needed to perform the task.

Indicates that you need to take some notes during the task.

1.4 Trademarks

Vaisala® and HUMICAP® are registered trademarks of Vaisala Oyj.

All other product or company names that may be mentioned in this publication are trade names, trademarks, or registered trademarks of their respective owners.

2. Product overview

2.1 Introduction to HM40

The Vaisala HUMICAP® Hand-Held Humidity and Temperature Meter HM40 Series comprises four models designed for various portable measurement applications. All models in the HM40 series use the HM40 handheld indicator with one of four probe options:

- HM41: a compact and portable standard option where a HMP113 probe attaches directly to the HM40 meter body.
- HM42: HM40 meter with a spiral cable and handle connected to an Ø 4 mm probe with a length of 235 mm. The structure of the probe is especially suitable for measurements in tight spaces, such as seams between wall tiles.
- HM45: HM45 uses the same HMP113 probe as HM41, but with a probe handle connected to the HM40 meter with a spiral cable, providing additional reach.
- HM46: HM40 meter with a spiral cable and handle connected to a 320 mm robust stainless steel probe designed for mechanically demanding applications such as dirty processes and relatively high temperatures (temporarily up to 180 °C / 356 °F).

The main features of the HM40 series are:

- Compact and robust housing.
- Measures a wide range of parameters: RH, T_d, T_w, a, x, h, T.
- Large graphical display.
- Graphs for selected humidity parameter and temperature.
- Can be user-calibrated (using the HMK15 humidity calibrator, for example).
- Powered by standard AA-size batteries (2 pcs).
- Indicator operation temperature range -10 ... +60 °C (14 ... 140 °F). Probe operation temperature ranges -40 ... +180 °C (-40 ... 356 °F), depending on probe model.
- Short (HM41/HM45) or long (HM42/HM46) soft case, depending on probe length.
- Belt clip.

Optional accessories:

- Different filters for increased protection against contaminants.
- USB-powered portable charger for AA-size NiMH rechargeable batteries.

More information

- Parameters (page 17)
- Application examples (page 18)
- HM40 Handheld Humidity and Temperature Meter Series (page 59)
- HM40 Series Technical Data (page 66)

2.1.1 HM41

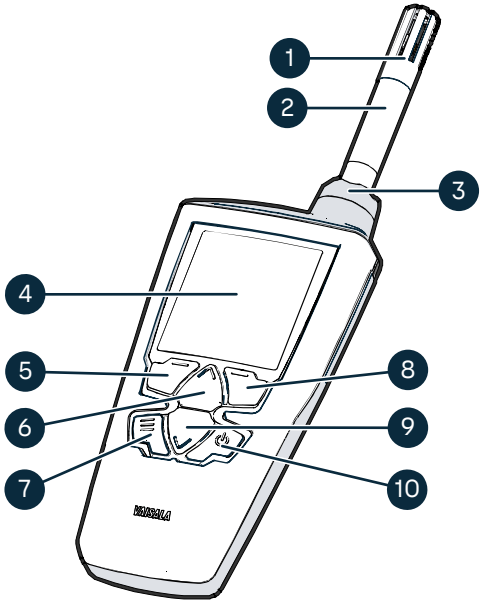

Figure 1 HM41, front

1 Filter and sensor
2 HMP113 probe
3 Probe holder
4 Display
5 Left function button
6 Up button
7 Menu button
8 Right function button
9 Down button
10 Power button

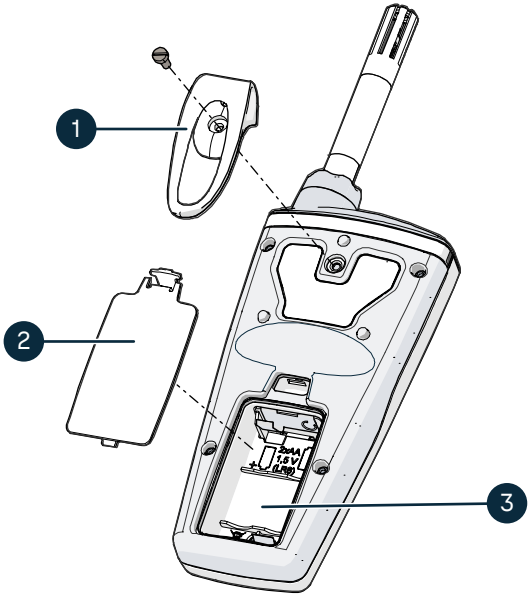

Figure 2 HM41, back

1 Belt clip
2 Battery cover
3 Batteries (2 x AA)

2.1.2 HM42 for tight spaces

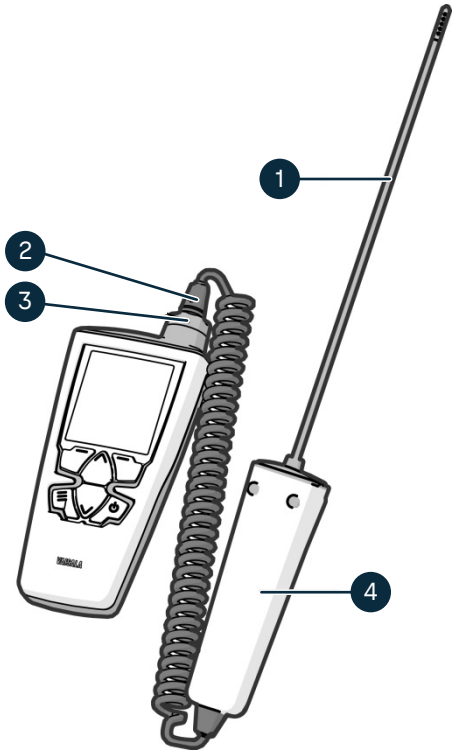

Figure 3 HM42

1 HM42 probe
2 Orientation mark
3 Cable connector
4 HM42 handle

2.1.3 HM45 remote probe with handle

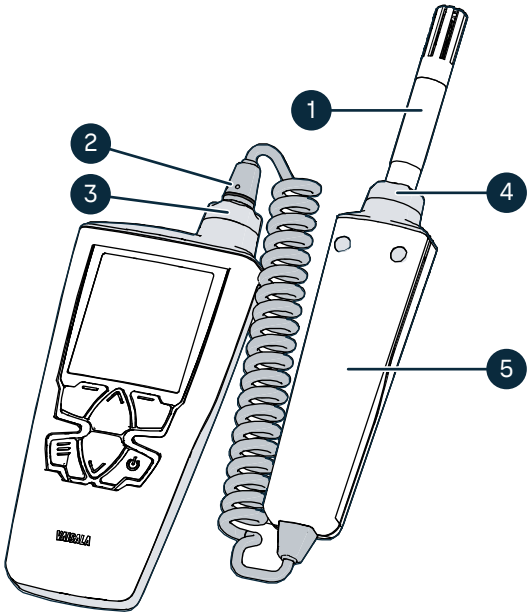

Figure 4 HM45 remote probe with handle

1 HMP113 probe
2 Orientation mark
3 Cable connector
4 Probe holder
5 HM40 handle

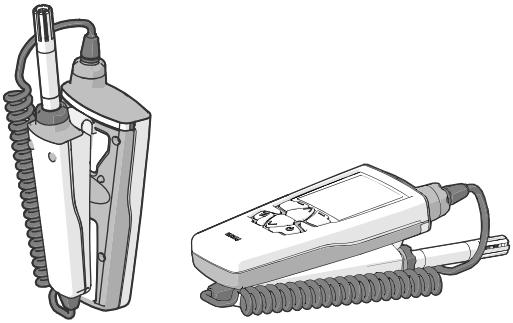

Figure 5 Connecting HM45 handle to belt clip

You can connect the HM45 handle to the belt clip for single handed use. Simply push the belt clip into the slot in the handle. When the handle is connected to the meter in this way, you can lay down the meter on top of the handle.

2.1.4 HM46 for mechanically demanding applications

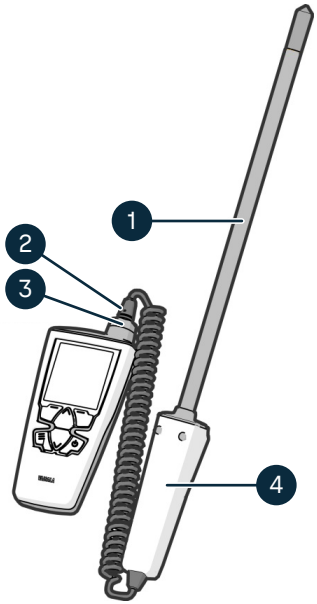

Figure 6 HM46 for mechanically demanding applications

1 HM46 probe
2 Orientation mark
3 Cable connector
4 HM46 handle

2.2 Parameters

The table below describes the parameters measured by HM40. All of the parameters are measured or calculated when the meter is on, independent of what is currently displayed. The parameters are also described in the indicator's **Help** menu.

Table 3 HM40 parameters

Parameter	Symbol	Unit(s)	Description
Relative humidity	RH	%	Ratio of the partial pressure of water vapor in the air to the saturation vapor pressure of air at the current temperature.

Parameter	Symbol	Unit(s)	Description
Dewpoint	T_d	°C °F	Temperature at which the water vapor in the air condenses into water at the current pressure. When the dew point is below 0 °C (32 °F), the meter outputs frost point instead of dew point.
Wet bulb temperature	T_w	°C °F	The minimum temperature that can be reached by evaporative cooling in the current conditions.
Absolute humidity	a	g/m^3 gr/ft^3	Quantity of water in a cubic meter (or cubic foot) of air.
Mixing ratio	x	g/kg gr/lb	Ratio of water vapor mass per kilogram (or pound) of dry air.
Enthalpy	h	kJ/kg btu/lb	Sum of the internal energy of a thermodynamic system.
Temperature	T	°C °F	Temperature in Celsius or Fahrenheit scale.

More information

- Help menu (page 46)

2.3 Application examples

HM41

HM41 uses a fixed HMP113 probe, providing a compact solution that is ideal for spot checks in open spaces.

The optional membrane filter for the HMP113 probe increases protection against contaminants.

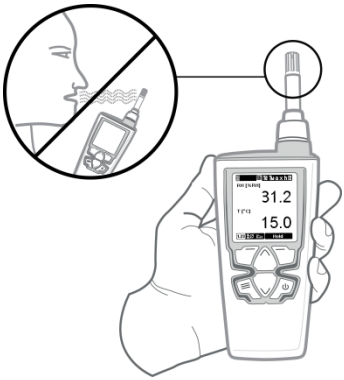

Figure 7 HM41 application example

When measuring with HM41, always hold the meter at a sufficient distance to avoid affecting the results with moisture from your breath.

HM45

HM45 uses the same HMP113 probe as HM41. In HM45, the probe is attached to a handle that is connected to the HM40 indicator with a spiral cable, providing additional reach.

HM42

HM42 has a small, Ø 4 mm probe head with a length of 235 mm. The thin structure of the probe makes it suitable for measurements in tight places such as joint spaces between tiles and beneath flooring.

Typical applications include mapping the affected area in water damage restoration, measuring moisture in insulation materials, and measuring the equilibrium humidity of, for example, timber.

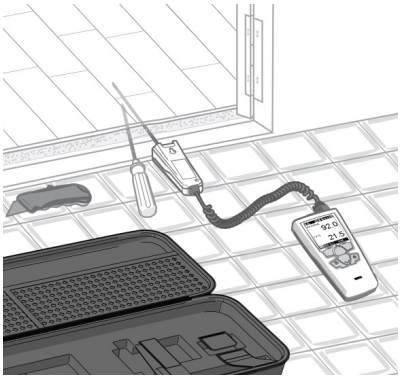

Figure 8 HM42 application example

Use a suitable tool such as a screw driver to create a space for the probe before inserting it.

To avoid bending or damaging the probe, never force it through structures.

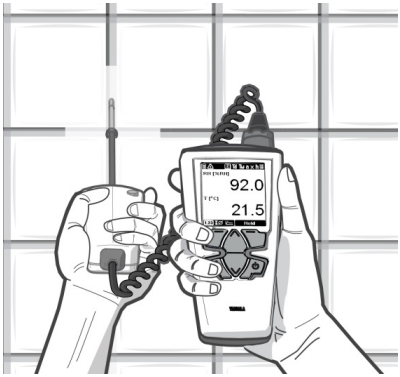

Figure 9 HM42 application example

When measuring, for example, from a wall so that the probe is placed in a horizontal position, make sure the probe does not bend: do not leave the probe unsupported.

Always insert the probe at least 4 cm inside the structure from which you are taking measurements.

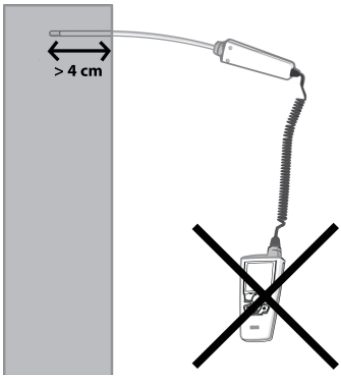

Figure 10 HM42 application example

Never leave the meter and the handle hanging down freely from the probe.

HM46

HM46 uses a 32 cm stainless steel probe that is optimized for mechanically demanding applications that require a robust probe structure, for example measurements in relatively high temperatures (up to +100 °C / 212 °F, temporarily even +180 °C / 356 °F) or in dirty processes.

In addition to water damage mapping applications, common uses for the HM46 include plant maintenance and the installation and inspection of air conditioning systems, production and storage areas, and production processes.

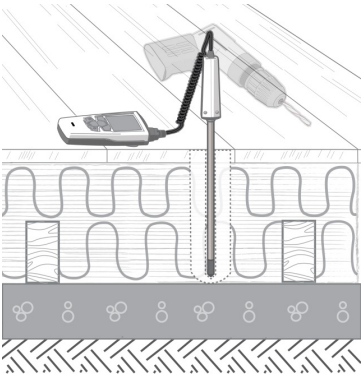

Figure 11 HM46 application example

2.4 Batteries

HM40 is powered by 2 AA-size batteries. You can use the following battery types:

- Alkaline (IEC-LR6)
- Lithium (IEC-FR6)
- NiMH (IEC-HR6)

CAUTION! Do not mix batteries of different types. Both batteries must be of the same type.

CAUTION! Observe the storage and operation instructions of the battery manufacturer.

Alkaline batteries are the standard choice in non-rechargeable batteries. They are a good match for the power requirements of HM40.

Lithium batteries are a good choice if you need the longest battery life or best capacity in low temperatures. Lithium batteries are not rechargeable. Do not confuse them with lithium-ion batteries, which cannot be used in HM40.

NiMH batteries are rechargeable, and available from Vaisala as an option.

More information

- Charging HM40 (page 50)
- Accessories and parts (page 22)

2.5 Accessories and parts

Filters

Table 4 Filters

Filter	Description
HM41 and HM45 (HMP113 probe)	
Plastic grid filter	The standard choice. It provides the fastest response time, as air can flow freely around the sensors.
Plastic grid with membrane filter	Has a membrane under the plastic grid (0.2 µm pore size) for additional protection against contaminants. It slows down the response time of the probe.

Filter	Description
HM42	
Steel grid filter with membrane tube	The standard choice. The membrane should be changed periodically and when it is getting dirty.
HM46	
Sintered filter	The standard choice. It has the same temperature tolerance as the probe itself.
Plastic grid filter	Provides a faster response time than the sintered filter but it has a more limited temperature tolerance. This filter is only recommended for non-demanding applications.
Membrane filter	Provides a faster response time than the sintered filter but it has a more limited temperature tolerance. The membrane under the plastic grid provides additional protection against contaminants compared to using only the plastic grid filter.

Chargers and batteries

You can order an external battery recharger with USB connection and compatible NiMH rechargeable batteries from Vaisala.

Belt clips and battery covers

If you need a new belt clip or battery compartment cover, you can order replacements from Vaisala.

2.6 Safety

If any instructions in this document conflict with your local or state legislation or regulations, always follow the local or state legislation or regulations.

CAUTION! Modification of the product can result in injury or damage the product. Do not modify the product or substitute parts unless instructed to do so. Improper modification voids your warranty.

CAUTION! Using components that do not meet Vaisala specifications can result in injury or damage the product. Use only accessories and spare parts that meet the specifications.

Failure to comply with the warnings and cautions in these instructions violates safety standards of design, manufacture, and intended use of the product. Vaisala assumes no liability for the failure to comply with these requirements.

3. HM40 menus and views

3.1 Display layout and control buttons

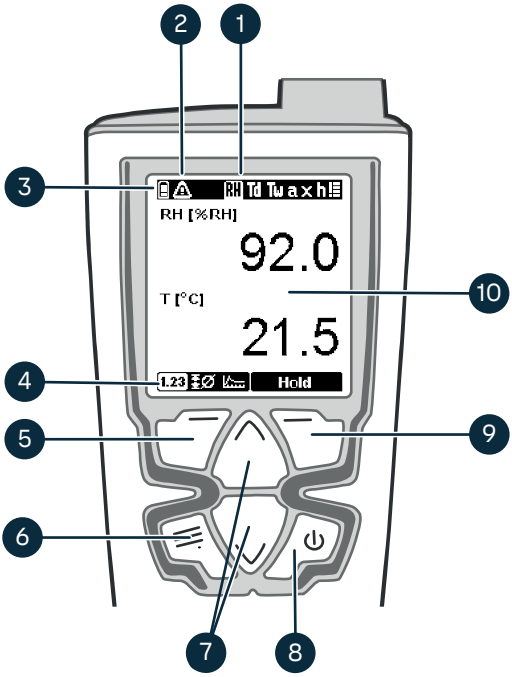

Figure 12 Display layout and control buttons

1 Current quantity
2 Alert indicator
3 Battery indicator
4 Current view
5 Change view
6 Open and close **Main** menu
7 Change quantity
8 Long press: power on/off
Short press: activate backlight
9 Long press: tag point
Short press: tag point and hold view
10 Measurement view area

Pressing the right function button holds the screen and tags the current measurement point.

More information

- Hold and tag (page 32)

3.1.1 Indicators

Table 5 Indicators

Symbol on display	Description
	Battery charge indicator Fresh batteries always show three bars. When the indicator shows two bars, the voltage of the batteries has started to drop. When there is a single (blinking) bar left, replace the batteries. The meter turns off automatically when the battery voltage drops too low.
	Alert indicator This indicator is shown next to the battery charge indicator if there is a measurement problem. The most likely causes are low battery and probe problems, for example: • Battery voltage is too low to power the probe. The measured values may show asterisks "*" instead of numbers. • Probe has been disconnected. • Probe has been damaged. • Probe is incompatible. • Probe is wet (it recovers automatically when it dries). The measured values may show asterisks "*" instead of numbers.
	Parameter indicator The selected parameter is highlighted by a light frame. The symbol on the right stands for all parameters.

Symbol on display	Description
	Calibration reminder indicator This indicator appears when you have set up a calibration reminder and the calibration is due. The indicator is shown until you calibrate the probe.

More information

- Parameters (page 17)
- Reminder settings (page 42)

3.1.2 Numeric view

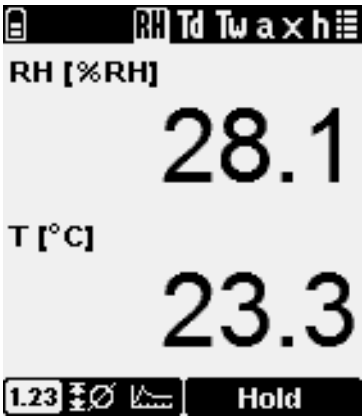

Figure 13 Numeric view

The **Numeric** view shows the current values of the selected humidity parameter and temperature.

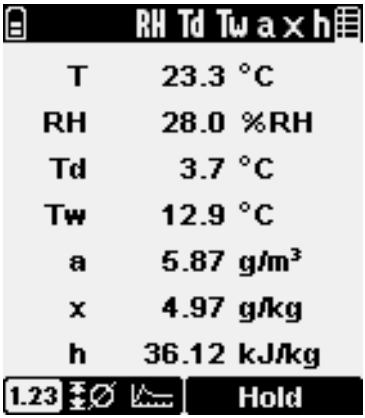

Figure 14 Numeric view, all parameters

In the all parameters view, the font is smaller to fit all values on view.

3.1.3 Statistics view

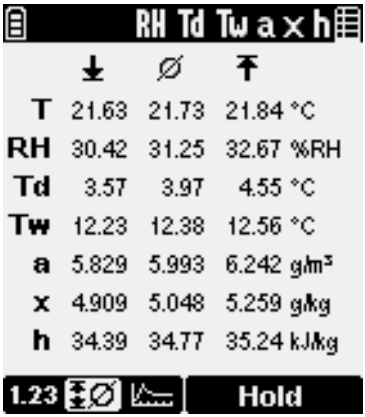

Figure 15 Statistics view

The **Statistics** view shows the current value of the selected parameter, as well as the maximum, average, and minimum value since the measurement was started. There is also a counter that shows how long the measurement has been running.

The following table describes the icons in the **Statistics** view:

Table 6 Icons in Statistics view

Icon	Description
	Maximum value
	Average value
	Minimum value
	Measurement time

The counter for measurement time is not shown in the all parameters view.

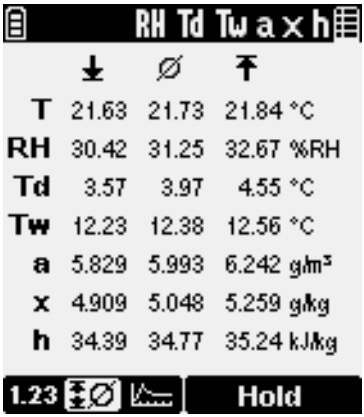

Figure 16 Statistics view, all parameters

3.1.4 Graph view

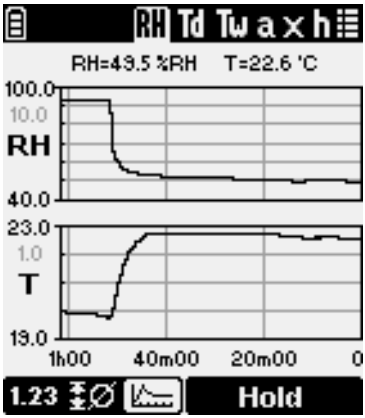

Figure 17 Graph view

The **Graph** view shows a continuously updating graph of the selected parameter and temperature.

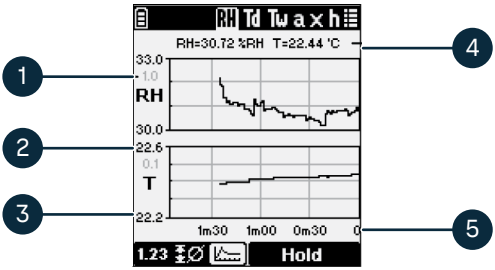

Figure 18 Graph view, measurements

1 Vertical spacing of the grid
2 Graph maximum
3 Graph minimum
4 Current values
5 Time

The graph limits and spacing adjust dynamically to show the full range of measurements.

CAUTION! HM40 has no permanent memory for graph data: when the meter is turned off, the graphs are cleared. Only tagged points are stored in permanent memory. To avoid losing graph data while working, set a suitable delay for the automatic power off or disable it.

Figure 19 Changing timescale

You can change the timescale of the graph in the **Main** menu. By default, the graph automatically changes the timescale to fit the measured data. If you select a short timescale, only the most recent data is visible.

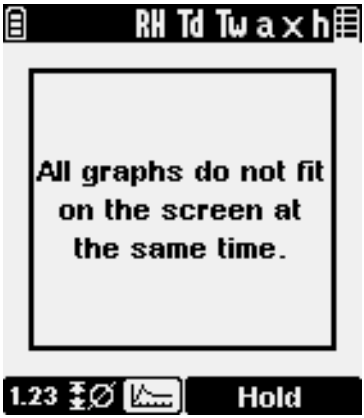

Figure 20 Graph view, all parameters

The graph view is not available in the all parameters view. Select a single parameter to show the graph.

More information

- Graph duration menu (page 37)
- Power off settings (page 44)

3.1.5 Hold and tag

If you press the right function button (**Hold**) in a measurement view, two things happen:

- The measurement view freezes until you press the same button again (**Release**).
- The latest measurement point is tagged (marked and stored in permanent memory).

Tagged points are shown in the **Graph** view as small dots below the graphs.

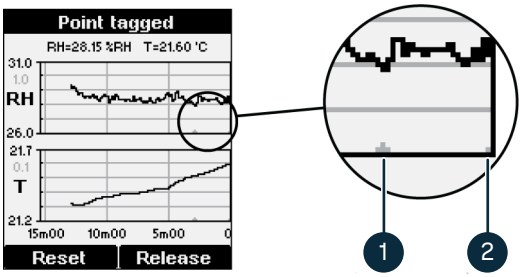

Figure 21 Tagged points

1 Previously tagged point
2 New tagged point

You can view the measurement values at the tagged points in the menu. You can also view and delete tagged points from memory in the menu options.

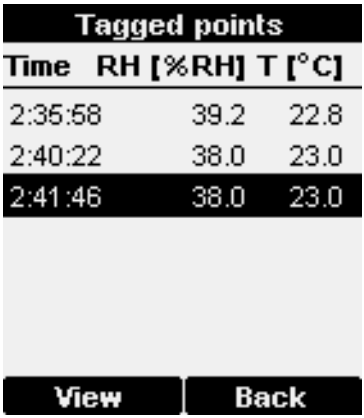

Figure 22 Tagged points measurement values

When a measurement view is held, the top of the display displays the current date and time. This is useful when you want to record the current data (take a photograph or write it down).

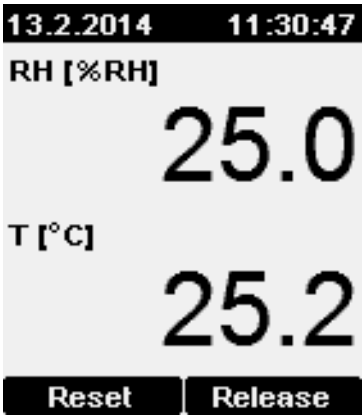

Figure 23 Hold view

If time has not been set, the top of the view simply reads “HOLD”.

CAUTION! When the view is held, you can reset all measurement data by pressing the **Reset** button. This clears all graphs and tagged points.

If you keep pressing the right function button (long press), the meter tags the point without freezing the view.

More information

- Tagged points menu (page 35)

3.2 Main menu

You can open the **Main** menu from the measurement view at any time by pressing the **Menu** button.

If you are already in the **Main** menu, pressing the **Menu** button returns you to the measurement view. If you are in a submenu, the **Menu** button returns you to the previous menu level.

Figure 24 Main menu

Use the arrow buttons to move up and down in the menu, and the function buttons to operate the menu options. Typical functions in the menus are:

- **View** and **Enter** open the selected menu option or submenu.
- **Change** and **Set** change the value of the selected option.
- **Back** returns to the previous menu view.
- **Exit** closes the menu and returns to the measurement view.

Some menu views have more content than can be visible at one time. This is indicated by a scroll bar that appears on the right side of the view. Use the arrow buttons to scroll up and down.

3.3 Tagged points menu

Figure 25 Tagged points

Select **Tagged points** in the **Main** menu to see the list of stored points and values.

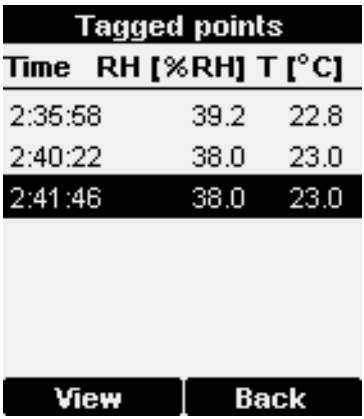

Figure 26 Tagged points parameter values

Time and temperature value are always shown for each tagged point. The humidity parameter that is shown is the same as you have selected in the measurement view. If all parameters view has been selected, RH is shown instead.

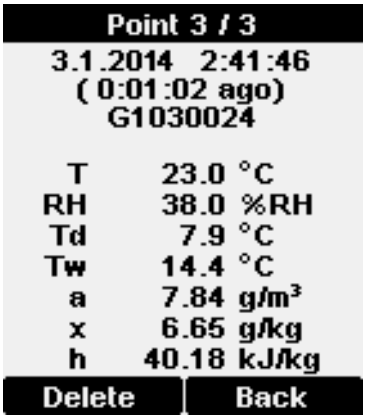

Figure 27 Data stored for each tagged point

The data stored for each tagged point includes:

- Time when the point was tagged.
- Serial number of the probe that was used (useful for identifying the point)
- Measured value of each parameter.

Press the **Delete** button to delete the point that is currently shown. To delete all points in memory, hold down the **Delete** button.

NOTICE! HM40 can store up to 40 tagged points. If a new tagged point is stored when the memory is full, the oldest tagged point is silently deleted to make room for the new point.

More information

- Hold and tag (page 32)

3.4 Graph duration menu

Figure 28 Graph duration

In the **Graph duration** menu, you can select the timescale of the **Graph** view. The shortest selectable timescale is 1.5 minutes, the longest 32 hours.

You can also select **Autoscale** which means that the timescale automatically adjusts to show all of the measurement data in memory, up to the maximum of 32 h.

More information

- Graph view (page 30)

3.5 Settings menu

Figure 29 Settings menu

Opens the **Settings** menu.

3.5.1 Language settings

Figure 30 Language settings

In the **Language** settings, you can change the display language of the meter. The options are:

- English (en)
- German (de)
- French (fr)

- Finnish (fi)
- Spanish (es)
- Swedish (sv)
- Chinese (zh)
- Russian (ru)
- Japanese (jp)
- Portuguese (pt)

3.5.2 Units settings

Figure 31 Units menu

The **Units** setting determines the measurement system that is used for the parameters: metric or non-metric.

- Metric
- Non-metric

The **Pressure unit** is set separately:

- hPa
- bar
- atm
- PSI

3.5.3 Time & Date settings

Figure 32 Time & Date settings

In the **Time & Date** settings, you can set the current date and time, and their presentation formats. Both date and time have their own preset formatting options.

Figure 33 Date setup menu

In the **Date setup** menu, you can set the current date:

- Arrow buttons change the selected value
- Left function button selects the next value (year, month, or day).
- **OK** button stores the date and returns to the **Settings** menu.

After setting the date, set the desired date format with the **Formatting** settings in the **Time & Date** menu.

Figure 34 Time setup menu

In the **Time setup** menu, you can set the current time:

- Arrow buttons change the selected value.
- Left function button selects the next value (hours, minutes, or seconds).
- **OK** button stores the time and returns to the **Settings** menu.

After setting the time, select 24 h or 12 h clock from the **Formatting** settings in the **Time & Date** menu.

3.5.4 Pressure setup settings

Figure 35 Pressure setup settings

In the **Pressure setup** settings, you can set the current ambient pressure. The pressure information is used when calculating certain humidity parameters, such as mixing ratio (symbol x).

If the ambient pressure differs significantly from the default setting of 1.0132 bar (due to high altitude, for example), set the correct pressure value so that the HM40 meter can calculate the measurement correctly.

3.5.5 Reminder settings

Figure 36 Reminder settings

Select **Reminder** from the **Settings** menu to set a reminder for calibrating the probe. You can select a preferred calibration interval of 3, 6, 12, or 24 months. Calibrating the probe resets the calibration interval.

To remove the reminder from use, select **Disabled**.

Note that you must set the correct date in the indicator for the calibration reminder to appear as intended.

Figure 37 Calibration reminder

The calibration reminder appears one month before the preferred calibration date is due.

To continue displaying the reminder for this interval, select **Snooze**. The reminder appears again at each power-on.

To hide the reminder, select **Close**. If you do not calibrate within a month, the reminder appears again.

CAUTION! Calibrating any parameter in the probe resets the calibration interval. This means that if you leave one parameter uncalibrated in a calibration session, the reminder does not appear separately for that parameter.

3.5.6 Backlight settings

Figure 38 Backlight settings

In the **Backlight** settings, you can change the display backlight. The options are:

Always on: Display is always lit. This option shortens the battery life significantly.

Always off: Display is always unlit. This option provides the best battery life.

Delay (30 s): Backlight automatically turns on when the user presses any button. The backlight turns off after 30 seconds of inactivity.

Dimmed: Display is always lit with a dim backlight.

3.5.7 Battery settings

In the **Battery** setting, select what kind of batteries are installed. This helps to scale the battery indicator correctly. The options are:

- Alkaline
- Rechargeable

3.5.8 Power off settings

The **Power off** settings define how long the device can remain inactive before powering off automatically. The time limit options are 10, 30, and 60 minutes.

Select **Never** to disable automatic power off.

CAUTION! HM40 has no permanent memory for graph data: when the meter is turned off, the graphs are cleared. Only tagged points are stored in permanent memory. To avoid losing graph data while working, set a suitable delay for the automatic power off or disable it.

3.5.9 Navigation settings

The **Navigation** setting affects the behavior of arrow buttons in the measurement view:

- **Normal**: Up arrow moves the parameter selector left, down arrow moves it right.
- **Inverted**: Reverses the direction.

3.5.10 Rounding settings

The **Rounding** setting affects the number of decimal places that are used to show the measurements:

- **On**: Measured values are rounded to one decimal place.
- **Off**: Measured values are shown with two decimal places.

3.5.11 Factory settings

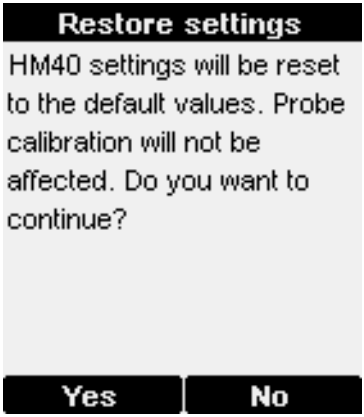

Figure 39 Factory settings menu

Selecting **Factory settings** restores all settings to their default values. Probe calibration is not affected.

3.6 Calibration menu

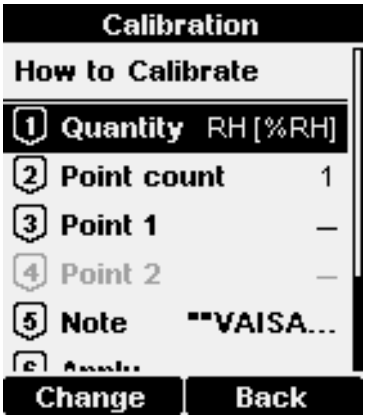

Figure 40 Calibration menu

In the **Calibration** menu, you can perform an adjustment procedure that corrects the humidity and temperature measurement of the meter.

More information

- Calibrating HM40 using HMK15 (page 53)

3.7 Help menu

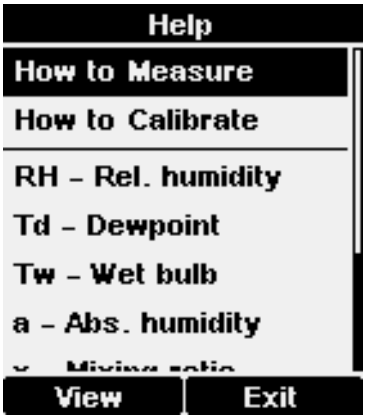

Figure 41 Help menu

Opens a menu with help topics on measurement, calibration, and the measured parameters.

Figure 42 Help menu, device information

The **Help** menu also includes a device information view where you can view technical information about your indicator and probe.

4. Using HM40

4.1 First start-up

1. Check that the probe is securely attached and remove the yellow transport protection cap from the probe.
2. Open the battery cover and insert two AA-size batteries.
3. Close the battery cover and turn on the meter by pressing the **Power** button. If the meter does not turn on, check the battery orientation. Replace the batteries with fresh or recharged ones, if needed.

4.2 Initial settings

When you power on HM40 for the first time (or after a factory reset of the settings), you must select the operation language. The meter then asks if you want to change the following settings:

- Units
- Date
- Time

If you answer **Yes** to the question (recommended), the meter shows the **Settings** menu before showing the measurement view. Use the arrow and function buttons to select the desired settings.

HM40 retains the date and time even during battery changes. The clock has to be set again only if the meter is without battery power for several hours.

More information

- Settings menu (page 38)

4.3 Basic measuring steps with HM40

Remove the transport protection cap

Remove the yellow transport protection cap from the probe when taking the meter into use.

Measure in a stable environment

If the measurement conditions are changing, you cannot get a reliable measurement result. Do not measure near heat sources, air conditioning, open doors, or windows.

For best results, leave the meter on in the measurement area and come back to check it later.

Avoid temperature differences

Temperature differences are a typical cause of error in humidity measurement and calibration. You must let the meter stabilize long enough: temperature differences level out very slowly.

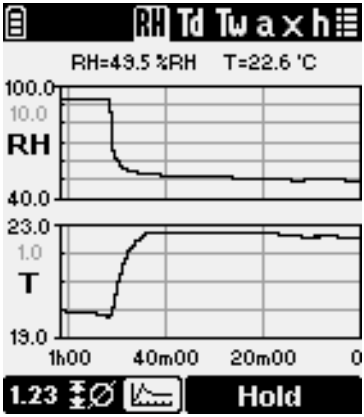

Figure 43 Graph view

Switch to the **Graph** view and wait until the graphs level out, indicating that the measurement is now stable.

Avoid condensation and rain

If the humidity sensor element becomes wet, the meter cannot measure until the sensor is dry again. Avoid rain and conditions where condensation can form on the sensor. Do not replace the transport protection cap if the probe or the cap is wet, since it prevents the probe from drying.

DANGER! Do not touch the sensor or blow on it to dry it out.

Calibrate the meter regularly

It is recommended that you calibrate the probe once a year, or if you have any reason to believe it is no longer within its accuracy specification. You can set a reminder for calibration at preferred calibration intervals (3, 6, 12, or 24 months).

More information

- Reminder settings (page 42)
- Calibration (page 53)

4.4 Charging HM40

The optional USB charger provides a convenient way to charge two NiMH batteries from any powered USB port (for example, from a laptop computer).

If you are not using a Vaisala-supplied charger and rechargeable batteries, read and follow the manufacturer's own charging instructions.

WARNING! Do not attempt to charge non-rechargeable (alkaline or lithium) batteries! Doing so leads to a risk of battery leakage, equipment damage, and risk of explosion and/or fire.

1. Place the rechargeable batteries in the charger and plug it into a USB port. The blue LED on top of the charger starts to blink.
2. When the LED stops blinking and stays on, the batteries are charged. The charging time is several hours for 2 fully discharged NiMH batteries.

5. Maintenance and troubleshooting

5.1 Cleaning

You can clean HM40 by wiping it with a moist cloth.

If the filter becomes contaminated, it is very likely to affect the humidity measurement since residue on the filter retains some moisture. Dirty filters should be replaced.

Do not use solvents to clean HM40. Do not spray anything directly on the HM40, since that may deposit impurities on the sensor.

CAUTION! Do not immerse HM40 in liquid to clean it.

CAUTION! Do not attempt to clean the sensor element that is located inside the filter. Any touching (or blowing with pressurized air) may damage it. If the measurement accuracy cannot be restored by calibration and adjustment, it is time to replace the probe.

5.2 Changing filter

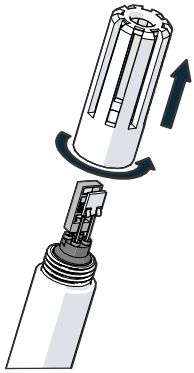

1. Turn the filter counterclockwise to open it.
2. Turn the filter until it can be removed.

3. Pull the filter out straight. Do not touch the sensors with the filter.
4. Install the new filter and tighten it.

More information

- Accessories and parts (page 22)

5.3 Changing probe

Changing the probe is tool-free and is done in the same way for the HM41 probe attached to the meter body and when using one of the probes with a handle.

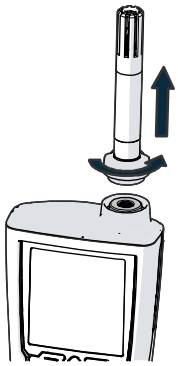

1. Press the power button to turn off the meter.
2. Turn the probe holder (the gray nut at the base of the probe) counterclockwise to loosen the probe.
3. Pull the probe holder and probe together away from the connector.
4. If the new probe does not have a probe holder, remove it from the old probe by pulling it over the filter and place it on the new probe.
5. Push the pins of the new probe in the holes of the connector. Tighten the probe holder.
6. Press the power button to turn on the meter.

CAUTION! If the alert indicator comes on after starting the meter, check the connection and verify that the probe has been ordered as a spare part for HM40.

5.4 Calibration

The humidity measurement accuracy of the probe should be checked once a year. You can do this yourself using a humidity reference (for example, the Vaisala Humidity Calibrator HMK15), or send the probe to a Vaisala Service Center for calibration.

You can set a reminder for calibration at preferred calibration intervals (3, 6, 12, or 24 months).

If the calibration shows that the measurement accuracy is no longer within specification, the probe must be adjusted. If accuracy cannot be restored with adjustment, the probe must be replaced. All probes that are ordered from Vaisala are delivered calibrated.

If you think the meter is not measuring humidity or temperature correctly, calibration and adjustment is not the first thing to do. Try the following first:

- Make sure nothing is interfering with the measurement: heat sources, temperature differences, or condensation.
- Check that there is no moisture on the probe. If the sensor has become wet, you must allow it to dry before you can measure.
- Always wait for the measurement to stabilize.

For an introduction to calibration, order or download the free calibration book: vaisala.com/calibrationbook.

More information

- Reminder settings (page 42)

5.4.1 Calibrating HM40 using HMK15

The HMK15 Humidity calibrator allows you to produce known humidity environments using saturated salt solutions.

Performing a good calibration takes some time and preparation. Read the HMK15 User Guide (M210185EN) before performing your first calibration with the HMK15.

1. Press the **Menu** button and select **Settings > Time & Date**. Verify that the current time and date are set correctly. Correct them if needed. The current date will be automatically set as the calibration date of the probe when adjustment is applied in step 10.

2. Press the **Menu** button and select the **Calibration** submenu.

3. Select the parameter to be calibrated at menu item **[1] Quantity**. You can calibrate Temperature (T) or Relative Humidity (RH) measurement. All other humidity parameters are calculated from RH and T, so they are also adjusted.

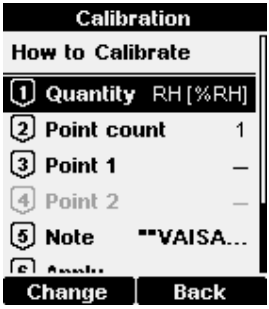

4. Select the number of calibration points at menu item **[2] Points**. You can perform a 1-point or 2-point calibration. For a 2-point calibration, you need two reference environments. For example, LiCl and NaCl salt chambers provide 11% and 75% relative humidity references. Note that when performing a 2-point RH calibration, the first point requires a < 50 % RH humidity reference, and the second point must be > 50 % RH. The difference between the two references must be at least 30 % RH.

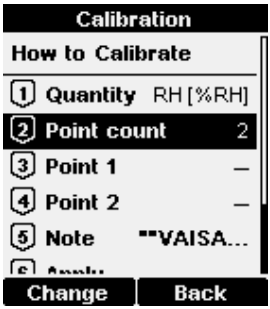

5. Remove the filter from the probe and place the probe in the first reference environment (first calibration point). Take care not to damage the sensors. Wait 20–40 minutes for the reading to stabilize.

6. Select menu item **[3] Point 1** and press the **Set** button. The meter now shows the currently measured value of the selected parameter. Set the reference value using the arrow buttons and press the **OK** button. The correction to the measurement at point 1 is now shown in the text for menu item **[3] Point 1**. If you are only doing a 1-point calibration, skip to step 8.

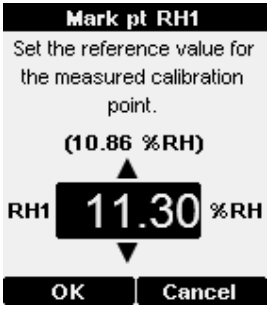

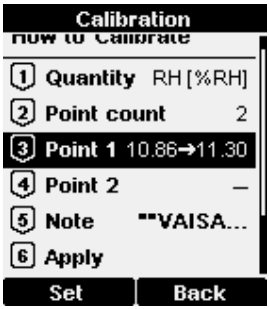

7. Place the probe in the second reference environment (second calibration point). Wait 20–40 minutes for the reading to stabilize.

8. Select menu item **[4] Point 2** and press the **Set** button. The meter now shows the currently measured value of the selected parameter. Set the reference value using the arrow buttons and press the **OK** button. The correction to the measurement at point 2 is now shown in the text for the menu item **[4] Point 2**.

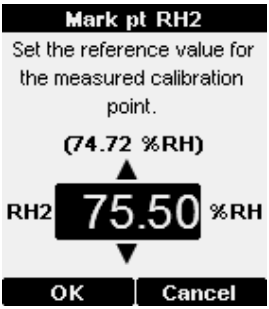

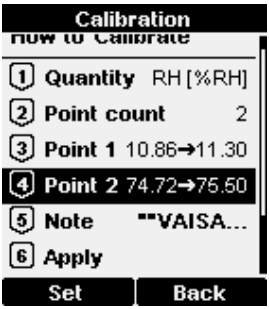

9. Select menu item **[5] Note** to edit the calibration info text that is stored in the probe. Edit the text using the select button and arrow keys. When done, select the **OK** character in the bottom right corner to save the changed text. To exit without saving, press the **Cancel** button.

10. Select menu item **[6] Apply** to save the calibration in the probe. Check the applied corrections in the confirmation view and press the **Apply** button. To exit without applying the correction, press the **Cancel** button.

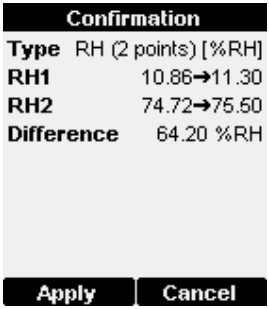

More information

- Time & Date settings (page 40)

5.5 Troubleshooting checklist

When troubleshooting, check the questions listed in Technical support (page 70) before contacting Vaisala technical support.

6. Technical data

6.1 HM40 Handheld Humidity and Temperature Meter Series

Table 7 HM41 technical data

Property	Description/Value
Humidity measurement accuracy (including non-linearity, hysteresis, and repeatability):	
At 0 ... +40 °C At -10 ... 0 °C and +40 ... +60 °C	±1.5 %RH (0–90 %RH) ±2.5 %RH (90–100 %RH) ±3.0 %RH (0–90 %RH) ±4.0 %RH (90–100 %RH)
Humidity measurement response time (90 %) with plastic grid filter	17 s

Property	Description/Value
Humidity sensor	HUMICAP® 180R
Temperature measurement range	-10 ... +60 °C (+14 ... +140 °F)
Temperature sensor	Pt1000 RTD Class F0.1 IEC 60751
Measurement probe	Interchangeable HMP113 probe
Probe material	PC/ABS plastic blend (white)
IP rating	IP54
Weight (with alkaline batteries)	230 g (8.1 oz)
Filter material	PC (glass-reinforced)

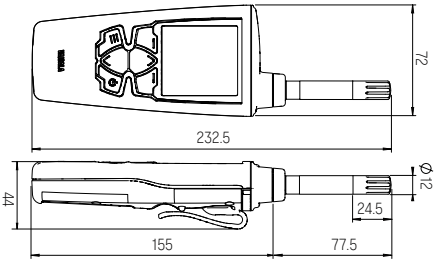

Figure 44 HM41 dimensions in mm

Table 8 HM42 technical data

Property	Description/Value
Humidity measurement accuracy (including non-linearity, hysteresis, and repeatability):	
At 0 ... +40 °C At -40 ... 0 °C and +40 ... +80 °C At +80 ... +100 °C	±1.5 %RH (0–90 %RH) ±2.5 %RH (90–100 %RH) ±3.0 %RH (0–90 %RH) ±4.0 %RH (90–100 %RH) ±4.0 %RH[1)]
Humidity measurement response time (90 %) with membrane filter and steel grid	26 s
Humidity sensor	HUMICAP® 100R-Mini
Temperature measurement range	-40 ... +100 °C (-40 ... +212 °F)
Temperature sensor	Pt1000 RTD Class F0.3 IEC60751
Measurement probe	HM42PROBE
Probe head material	Stainless steel

Property	Description/Value
IP rating	IP40 (probe), IP54 (indicator)
Weight (with alkaline batteries)	370 g (13.1 oz)
Filter material	Stainless steel and PTFE membrane
Probe cable length	1500 mm (59 in)

1) Not recommended for T_d > 85 °C

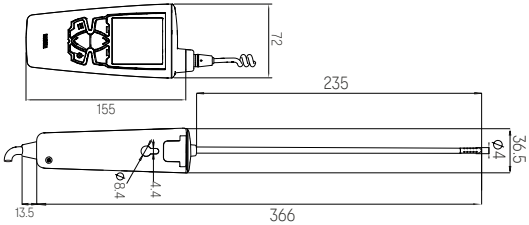

Figure 45 HM42 dimensions in mm

Table 9 HM45 technical data

Property	Description/Value
Humidity measurement accuracy (including non-linearity, hysteresis, and repeatability):	
At 0 ... +40 °C At -40 ... 0 °C and +40 ... +60 °C	±1.5 %RH (0–90 %RH) ±2.5 %RH (90–100 %RH) ±3.0 %RH (0–90 %RH) ±4.0 %RH (90–100 %RH)
Humidity measurement response time (90 %) with plastic grid filter	17 s
Humidity sensor	HUMICAP® 180R
Temperature measurement range	-40 ... +60 °C (-40 ... +140 °F)
Temperature sensor	Pt1000 RTD Class F0.1 IEC 60751
Measurement probe	Interchangeable HMP113 with HM40HANDLE
Probe material	PC/ABS plastic blend (white)
IP rating	IP54
Weight (with alkaline batteries)	330 g (11.6 oz)
Filter material	PC (glass-reinforced)
Probe cable length	1200 mm (47 in)

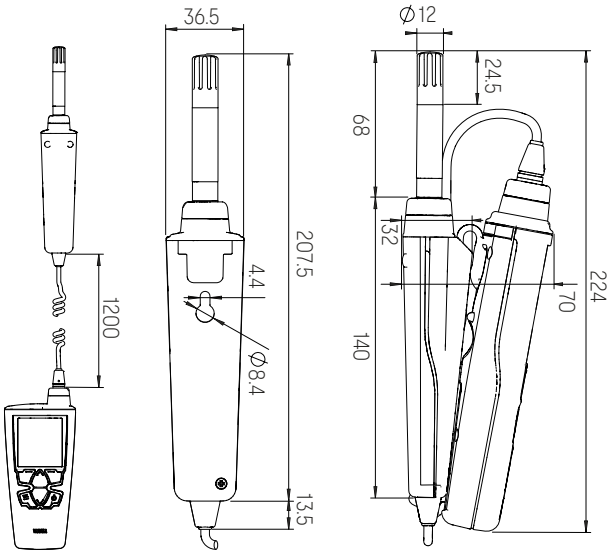

Figure 46 HM45 dimensions in mm

Table 10 HM46 technical data

Property	Description/Value
Humidity measurement accuracy (including non-linearity, hysteresis, and repeatability):	
At 0 ... +40 °C At -40 ... 0 °C and +40 ... +80 °C At +80 ... +100 °C	±1.5 %RH (0–90 %RH) ±2.5 %RH (90–100 %RH) ±3.0 %RH (0–90 %RH) ±4.0 %RH (90–100 %RH) ±4.0 %RH [1)]
Humidity measurement response time (90 %) with brass sintered filter	40 s
Humidity sensor	HUMICAP® 180R
Temperature measurement range	-40 ... +100 °C (-40 ... +212 °F), short-term up to +180 °C (+356 °F)
Temperature sensor	Pt1000 RTD Class F0.1 IEC 60751
Measurement probe	HM46PROBE
Probe head material	Stainless steel, brass filter
IP rating	IP40 (probe), IP54 (indicator)
Weight (with alkaline batteries)	490 g (17.3 oz)
Filter material	Sintered brass
Probe cable length	1500 mm (59 in)

1) Not recommended for T_d > 85 °C

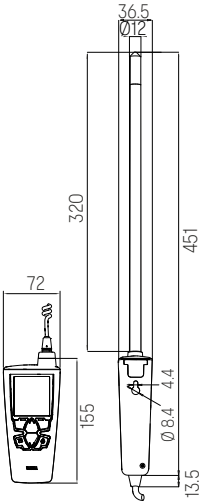

Figure 47 HM46 dimensions in mm

6.2 HM40 Series Technical Data

Table 11 HM40 Series measurement performance

Property	Description/Value
Calculated parameters	Dew point, wet bulb temperature, absolute humidity, mixing ratio, enthalpy
Relative humidity	
Measurement range	0–100 %RH
Factory calibration uncertainty at +20 °C (+68 °F):	
HM41 and HM45	±1.1 %RH (0–90 %RH) ±1.8 %RH (90–100 %RH)
HM42 and HM46	±1.5 %RH
Stability	±2 %RH over 2 years
Temperature	
Accuracy over temperature range, HM41 and HM45:	
at +15 ... +25 °C (+59 ... +77 °F)	±0.1 °C (±0.18 °F)
at 0 ... +15 °C and +25 ... +40 °C (+32 ... +59 °F and +77 ... +104 °F)	±0.15 °C (±0.27 °F)

Property	Description/Value
Accuracy over temperature range, HM42 and HM46:	
At 0 ... +40 °C (+32 ... +104 °F)	±0.2 °C (0.36 °F)
At -40 ... 0 °C and +40 ... +100 °C (-40 ... +32 °F and +104 ... +212 °F)	±0.4 °C (0.72 °F)

Table 12 HM40 Series operating environment

Property	Description/Value
Storage temperature	-30 ... +70 °C (-22 ... +158 °F)
Operating temperature	
Indicator	-10 ... +60 °C (+14 ... +140 °F)
Probe handle	-40 ... +60 °C (-40 ... +140 °F)
Probe head	-40 ... +180 °C (-40 ... +356 °F)

Table 13 HM40 Series indicator

Property	Description/Value
Display	LCD (140 x 160 pixels)
Power-up time	< 3 s
Batteries	2 × AA, 1.5 V
Operation time	(Typical) 100 hours (without backlight)
Menu languages	English, Chinese (simplified), Finnish, French, German, Japanese, Portuguese, Russian, Spanish, Swedish

Table 14 HM40 Series compliance

Property	Description/Value
EU directives and regulations	EMC Directive (2014/30/EU) RoHS Directive (2011/65/EU) as amended by 2015/863
EMC immunity	EN 61326-1:2013, Electrical equipment for measurement, control and laboratory use - EMC requirements - Part 1: General requirements.
EMC emissions	CISPR 22 / EN 55022, Class B FCC part 15 B, Class B CAN ICES-3(B)/NMB-3(B)

Property	Description/Value
Compliance marks	CE, China RoHS, RCM, UKCA

Table 15 HM40 Series spare parts and accessories

Item	Order code
Indicator	
Spare HM40 indicator	HM40INDI
Belt clip (3 pcs)	227710SP
Battery cover (3 pcs)	225688SP
External battery recharger with USB connection and 2 batteries	229249SP
Case for short HM40 probes	235849SP
Case for long HM40 probes	DRW242351SP
Standard probe (HM41)	
HMP113 probe for HM40	HMP113 (configuration: V00B2C1A0)
Plastic locking bushing (3 pcs) for attaching HMP113 probe to HM40 indicator	DRW238590SP
Plastic grid filter for HMP113 probe	DRW240185SP
Plastic grid with membrane filter for HMP113 probe	ASM210856SP
HM42 probe (HM42)	
Thin 4 mm diameter probe for HM40	HM42PROBE
Steel grid filter for HM42PROBE	19867HM
Membrane tube set (5 pcs) for HM42PROBE	19858HM
Rubber sleeve set (10 pcs) for HM42PROBE	19809HM
Calibration adapter for HM42PROBE	HM37067
Remote probe (HM45)	
HMP113 probe for HM40	HMP113 (configuration: V00B2C1A0)
Plastic locking bushing (3 pcs) for attaching HMP113 probe to HM40 indicator	DRW238590SP
HM40 handle and cable	HM40HANDLE
Plastic grid filter for HMP113 probe	DRW240185SP
Plastic grid with membrane filter for HMP113 probe	ASM210856SP

Item	Order code
HM46 probe (HM46)	
Stainless steel 12 mm diameter probe for HM40	HM46PROBE
Sintered filter for HM46PROBE	0195
Optional membrane filter for HM46PROBE (up to +80 °C)	10159HM
Plastic grid filter for HM46PROBE (up to +80 °C)	6221
Disposable sleeve, 50 pcs set	1558
Probe holder	HM36915

Table 16 HM40 Series mechanical specifications

Property	Description/Value
Materials	
Indicator body	PC/ABS blend, acrylic display lens
Probe holder	PC/ABS blend (gray)
Probe handle	PC/ABS blend (white), PC/ABS blend (gray, HM45), PBT (gray, HM42/46)
HMP113 probe or probe measurement head	PC/ABS blend (white, HM41/45) or stainless steel (HM42/46)

7. Vaisala services

7.1 Service centers

Vaisala offers comprehensive customer care throughout the life cycle of our products. Our service centers offer maintenance, calibration, upgrade, and repair services. All the services are provided worldwide with fast deliveries. For more information, go to vaisala.com/services.

The services are available from:

- Vaisala Online Store, store.vaisala.com
- Vaisala Services, helpdesk@vaisala.com

The provided services vary product by product.

7.2 Technical support

You can contact Vaisala technical support at vaisala.my.site.com/myvaisala or helpdesk@vaisala.com. You can find all our support channels at vaisala.com/support.

When contacting technical support, provide the following as applicable:

- Product name, model, and serial number
- Software/Firmware version
- Name and location of the installation site
- Name and contact information of a technical person who can provide further information
- Diagnostics package for the application

If applicable, also provide the following details:

- What failed (what worked / did not work)?
- Where did it fail (location and environment)?
- When did it fail (date, immediately / after a while / periodically / randomly)?
- How many failed (only one defect / other same or similar defects / several failures in one unit)?
- What was done when the failure was noticed?
- What was connected to the product and to which connectors?
- What is the input power source type, voltage, and what else (such as lighting, heaters, and motors) was connected to the same power output?
- Are all parts connected and grounded properly? Take a photo to help the troubleshooting.

7.3 Warranty

For warranty terms and conditions and the warranty claim process, see vaisala.com/warranty.

Note that warranty coverage may not apply if the product is damaged due to normal wear and tear, exceptional operating conditions, negligent handling or installation, or unauthorized modifications. See the applicable supply contract or Conditions of Sale for details of the warranty for each product.

Online store

Accessories, spare parts, and calibration and repair products are available online at store.vaisala.com.

Recycling

Recycle all applicable material according to local regulations.

VAISALA

vaisala.com

AKRIBIS · www.akribis.info · contacto@akribis.info