DATASHEET

# HM40

Vaisala · Authorized Partner

Distributed by AKRIBIS

# HUMICAP® Handheld Humidity and Temperature Meter Series HM40

## Features

- Humidity measurement range 0–100 %RH
- Temperature measurement ranges -40 ... +100 °C (-40 ... +212 °F), depending on probe model. The HM46 model can measure up to +180 °C (+356 °F) for a short period of time.
- Incorporates proven Vaisala HUMICAP® sensor technology
- Calibration reminder function
- Probes can be user-calibrated using an on-site reference
- Graphical display indicates when measurement has stabilized
- Hold-button to freeze the screen and save the reading
- Multilingual user interface available in 10 languages (EN, DE, FR, JA, ZH, PT, ES, RU, FI, SV)

The easy-to-use HM40 is a compact and portable humidity meter that provides reliable measurements in a wide range of applications. It is the ideal spot-checking tool for everything from structural moisture measurement and air conditioning systems to humidity measurement in industrial production processes and life science applications. There are four different models available: HM41, HM42, HM45, and HM46.

## Benefits

- Compact, portable, and easy to use
- Versatile meter with wide measurement range and multiple calculated parameters
- Ideal for spot-checking in a wide variety of applications

## Simple and easy to use

HM40 has a large, user-friendly graphical display and easy-to-use push buttons. The user interface is simple and intuitive, and available in 10 languages. Also, many settings can be modified to meet the users' individual needs. In addition to relative humidity and temperature, HM40 provides five calculated humidity parameters, all of which are available in metric and non-metric units. HM40 is powered by 2 AA batteries. An external USB charger and rechargeable AA-sized NiMH batteries are available as an option. Each model also comes with a handy belt clip and case.

## Easy recalibration

Calibrating HM40 is easy. The meter or the probe can be sent to a Vaisala Service Center for recalibration. Alternatively, calibration can be completed on-site by users with a humidity reference such as another handheld meter or Vaisala Humidity Calibrator HMK15. The indicator includes a calibration reminder function that can be activated by the user.

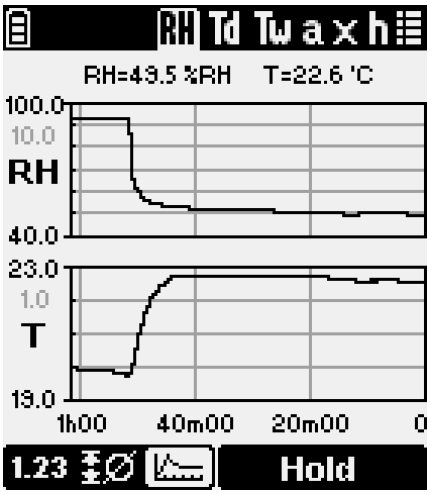


The graph clearly indicates when readings have stabilized.

# HM40 Handheld Humidity and Temperature Meter Series

## HM41 technical data

| | |
|---|---|
| Humidity measurement accuracy (including non-linearity, hysteresis, and repeatability): | |
| At 0 ... +40 °C | ±1.5 %RH (0–90 %RH)<br>±2.5 %RH (90–100 %RH) |
| At -10 ... 0 °C and +40 ... +60 °C | ±3.0 %RH (0–90 %RH)<br>±4.0 %RH (90–100 %RH) |
| Humidity measurement response time (90 %) with plastic grid filter | 17 s |
| Humidity sensor | HUMICAP® 180R |
| Temperature measurement range | -10 ... +60 °C (+14 ... +140 °F) |
| Temperature sensor | Pt1000 RTD Class F0.1 IEC 60751 |
| Measurement probe | Interchangeable HMP113 probe |
| Probe material | PC/ABS plastic blend (white) |
| IP rating | IP54 |
| Weight (with alkaline batteries) | 230 g (8.1 oz) |
| Filter material | PC (glass-reinforced) |

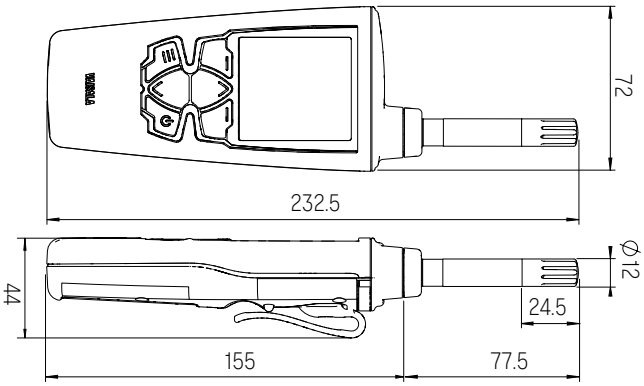


HM41 dimensions in mm

## HM42 technical data

| | |
|---|---|
| Humidity measurement accuracy (including non-linearity, hysteresis, and repeatability): | |
| At 0 ... +40 °C | ±1.5 %RH (0–90 %RH)<br>±2.5 %RH (90–100 %RH) |
| At -40 ... 0 °C and +40 ... +80 °C | ±3.0 %RH (0–90 %RH)<br>±4.0 %RH (90–100 %RH) |
| At +80 ... +100 °C | ±4.0 %RH[1)] |
| Humidity measurement response time (90 %) with membrane filter and steel grid | 26 s |
| Humidity sensor | HUMICAP® 100R-Mini |
| Temperature measurement range | -40 ... +100 °C (-40 ... +212 °F) |
| Temperature sensor | Pt1000 RTD Class F0.3 IEC60751 |
| Measurement probe | HM42PROBE |
| Probe head material | Stainless steel |
| IP rating | IP40 (probe), IP54 (indicator) |
| Weight (with alkaline batteries) | 370 g (13.1 oz) |
| Filter material | Stainless steel and PTFE membrane |
| Probe cable length | 1500 mm (59 in) |

*1) Not recommended for $T_d$ > 85 °C*

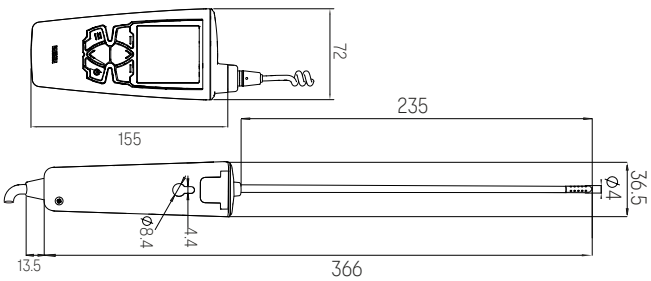


HM42 dimensions in mm

## HM45 technical data

| | |
|---|---|
| Humidity measurement accuracy (including non-linearity, hysteresis, and repeatability): | |
| At 0 ... +40 °C | ±1.5 %RH (0–90 %RH)<br>±2.5 %RH (90–100 %RH) |
| At -40 ... 0 °C and +40 ... +60 °C | ±3.0 %RH (0–90 %RH)<br>±4.0 %RH (90–100 %RH) |
| Humidity measurement response time (90 %) with plastic grid filter | 17 s |
| Humidity sensor | HUMICAP® 180R |
| Temperature measurement range | -40 ... +60 °C (-40 ... +140 °F) |
| Temperature sensor | Pt1000 RTD Class F0.1 IEC 60751 |
| Measurement probe | Interchangeable HMP113 with HM40HANDLE |
| Probe material | PC/ABS plastic blend (white) |
| IP rating | IP54 |
| Weight (with alkaline batteries) | 330 g (11.6 oz) |
| Filter material | PC (glass-reinforced) |
| Probe cable length | 1200 mm (47 in) |

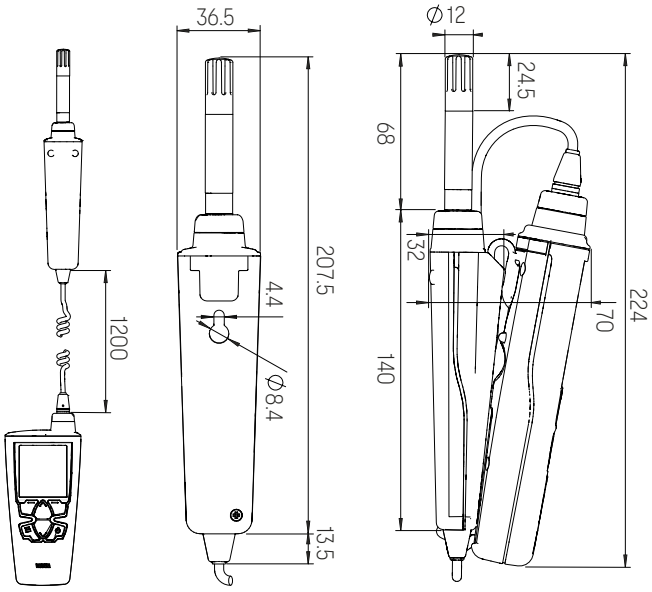


HM45 dimensions in mm

## HM46 technical data

| | |
|---|---|
| Humidity measurement accuracy (including non-linearity, hysteresis, and repeatability): | |
| At 0 ... +40 °C | ±1.5 %RH (0–90 %RH)<br>±2.5 %RH (90–100 %RH) |
| At -40 ... 0 °C and +40 ... +80 °C | ±3.0 %RH (0–90 %RH)<br>±4.0 %RH (90–100 %RH) |
| At +80 ... +100 °C | ±4.0 %RH [1)] |
| Humidity measurement response time (90 %) with brass sintered filter | 40 s |
| Humidity sensor | HUMICAP® 180R |
| Temperature measurement range | -40 ... +100 °C (-40 ... +212 °F), short-term up to +180 °C (+356 °F) |
| Temperature sensor | Pt1000 RTD Class F0.1 IEC 60751 |
| Measurement probe | HM46PROBE |
| Probe head material | Stainless steel, brass filter |
| IP rating | IP40 (probe), IP54 (indicator) |
| Weight (with alkaline batteries) | 490 g (17.3 oz) |
| Filter material | Sintered brass |
| Probe cable length | 1500 mm (59 in) |

*1) Not recommended for $T_d$ > 85 °C*

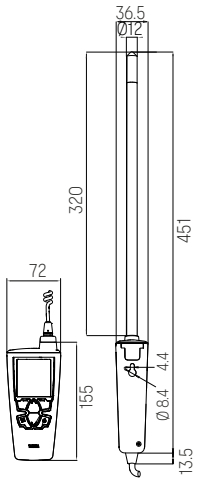


HM46 dimensions in mm

# HM40 Series Technical Data

## Measurement performance

| | |
|---|---|
| Calculated parameters | Dew point, wet bulb temperature, absolute humidity, mixing ratio, enthalpy |
| **Relative humidity** | |
| Measurement range | 0–100 %RH |
| Factory calibration uncertainty at +20 °C (+68 °F): | |
| HM41 and HM45 | ±1.1 %RH (0–90 %RH)<br>±1.8 %RH (90–100 %RH) |
| HM42 and HM46 | ±1.5 %RH |
| Stability | ±2 %RH over 2 years |
| **Temperature** | |
| Accuracy over temperature range, HM41 and HM45: | |
| at +15 ... +25 °C (+59 ... +77 °F) | ±0.1 °C (±0.18 °F) |
| at 0 ... +15 °C and +25 ... +40 °C (+32 ... +59 °F and +77 ... +104 °F) | ±0.15 °C (±0.27 °F) |
| Accuracy over temperature range, HM42 and HM46: | |
| At 0 ... +40 °C (+32 ... +104 °F) | ±0.2 °C (0.36 °F) |
| At -40 ... 0 °C and +40 ... +100 °C (-40 ... +32 °F and +104 ... +212 °F) | ±0.4 °C (0.72 °F) |

## Operating environment

| | |
|---|---|
| Storage temperature | -30 ... +70 °C (-22 ... +158 °F) |
| **Operating temperature** | |
| Indicator | -10 ... +60 °C (+14 ... +140 °F) |
| Probe handle | -40 ... +60 °C (-40 ... +140 °F) |
| Probe head | -40 ... +180 °C (-40 ... +356 °F) |

## Indicator

| | |
|---|---|
| Display | LCD (140 x 160 pixels) |
| Power-up time | < 3 s |
| Batteries | 2 × AA, 1.5 V |
| Operation time | (Typical) 100 hours (without backlight) |
| Menu languages | English, Chinese (simplified), Finnish, French, German, Japanese, Portuguese, Russian, Spanish, Swedish |

## Compliance

| | |
|---|---|
| EU directives and regulations | EMC Directive (2014/30/EU)<br>RoHS Directive (2011/65/EU) as amended by 2015/863 |
| EMC immunity | EN 61326-1:2013, Electrical equipment for measurement, control and laboratory use - EMC requirements - Part 1: General requirements. |
| EMC emissions | CISPR 22 / EN 55022, Class B<br>FCC part 15 B, Class B<br>ICES-3 / NMB-3 (Class B) |
| Compliance marks | CE, China RoHS, RCM, UKCA |

## Spare parts and accessories

| | |
|---|---|
| **Indicator** | |
| Spare HM40 indicator | HM40INDI |
| Belt clip (3 pcs) | 227710SP |
| Battery cover (3 pcs) | 225688SP |
| External battery recharger with USB connection and 2 batteries | 229249SP |
| Case for short HM40 probes | 235849SP |
| Case for long HM40 probes | DRW242351SP |
| **Standard probe (HM41)** | |
| HMP113 probe for HM40 | HMP113 (configuration: V00B2C1A0) |
| Plastic locking bushing (3 pcs) for attaching HMP113 probe to HM40 indicator | DRW238590SP |
| Plastic grid filter for HMP113 probe | DRW240185SP |
| Plastic grid with membrane filter for HMP113 probe | ASM210856SP |
| **HM42 probe (HM42)** | |
| Thin 4 mm diameter probe for HM40 | HM42PROBE |
| Steel grid filter for HM42PROBE | 19867HM |
| Membrane tube set (5 pcs) for HM42PROBE | 19858HM |
| Rubber sleeve set (10 pcs) for HM42PROBE | 19809HM |
| Calibration adapter for HM42PROBE | HM37067 |
| **Remote probe (HM45)** | |
| HMP113 probe for HM40 | HMP113 (configuration: V00B2C1A0) |
| Plastic locking bushing (3 pcs) for attaching HMP113 probe to HM40 indicator | DRW238590SP |
| HM40 handle and cable | HM40HANDLE |
| Plastic grid filter for HMP113 probe | DRW240185SP |
| Plastic grid with membrane filter for HMP113 probe | ASM210856SP |
| **HM46 probe (HM46)** | |
| Stainless steel 12 mm diameter probe for HM40 | HM46PROBE |
| Sintered filter for HM46PROBE | 0195 |
| Optional membrane filter for HM46PROBE (up to +80 °C) | 10159HM |
| Plastic grid filter for HM46PROBE (up to +80 °C) | 6221 |
| Disposable sleeve, 50 pcs set | 1558 |
| Probe holder | HM36915 |

## Mechanical specifications

| | |
|---|---|
| **Materials** | |
| Indicator body | PC/ABS blend, acrylic display lens |
| Probe holder | PC/ABS blend (gray) |
| Probe handle | PC/ABS blend (white), PC/ABS blend (gray, HM45), PBT (gray, HM42/46) |
| HMP113 probe or probe measurement head | PC/ABS blend (white, HM41/45) or stainless steel (HM42/46) |

VAISALA

Published by Vaisala | B211064EN-H © Vaisala 2026

All rights reserved. Any logos and/or product names are trademarks of Vaisala or its individual partners. Any reproduction, transfer, distribution or storage of information contained in this document is strictly prohibited. All specifications — technical included — are subject to change without notice.