USER GUIDE

GMW90

Vaisala · Authorized Partner

Distributed by AKRIBIS

VAISALA

USER'S GUIDE

Vaisala CARBOCAP® Carbon Dioxide, Temperature, and Humidity Transmitters GMW90 Series

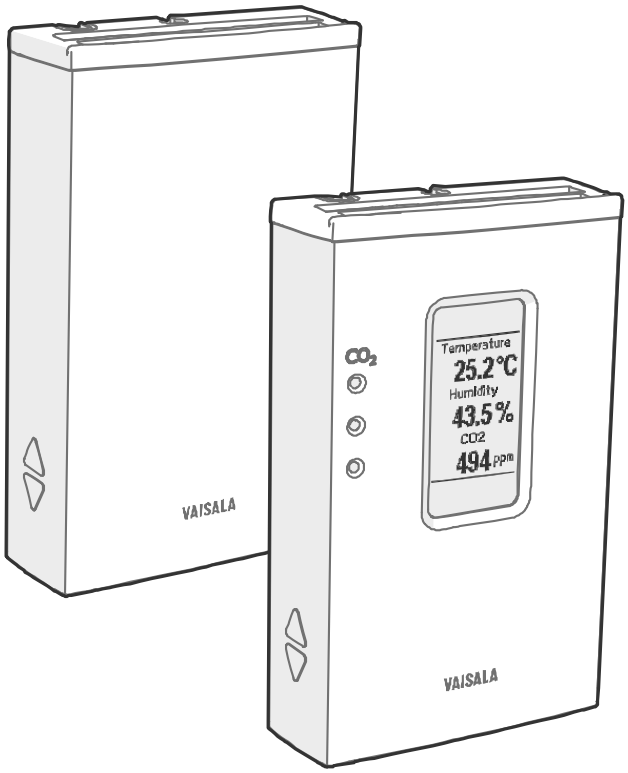

M211659EN-C

AKRIBIS · www.akribis.info · contacto@akribis.info

PUBLISHED BY

Street address: Vanha Nurmijärventie 21, FI-01670 Vantaa, Finland
Mailing address: P.O. Box 26, FI-00421 Helsinki, Finland
Phone: +358 9 8949 1
Fax: +358 9 8949 2227

Visit our Internet pages at www.vaisala.com.

© Vaisala 2016

No part of this manual may be reproduced, published or publicly displayed in any form or by any means, electronic or mechanical (including photocopying), nor may its contents be modified, translated, adapted, sold or disclosed to a third party without prior written permission of the copyright holder. Translated manuals and translated portions of multilingual documents are based on the original English versions. In ambiguous cases, the English versions are applicable, not the translations.

The contents of this manual are subject to change without prior notice.

Local rules and regulations may vary and they shall take precedence over the information contained in this manual. Vaisala makes no representations on this manual's compliance with the local rules and regulations applicable at any given time, and hereby disclaims any and all responsibilities related thereto.

This manual does not create any legally binding obligations for Vaisala towards customers or end users. All legally binding obligations and agreements are included exclusively in the applicable supply contract or the General Conditions of Sale and General Conditions of Service of Vaisala.

Table of Contents

CHAPTER 1
GENERAL INFORMATION **7**
About This Manual **7**
Contents of This Manual 7
Version Information 8
Related Manuals 8
Documentation Conventions 8
Safety **9**
ESD Protection 9
Recycling **10**
Regulatory Compliances **10**
Patent Notice **10**
Trademarks **11**
Software License **11**
Warranty **11**

CHAPTER 2
PRODUCT OVERVIEW **12**
Introduction to GMW90 Series **12**
GMW90 Series Transmitters **13**
Output Parameters Explained **14**
Transmitter Parts **15**
Decorative Cover Option **18**

CHAPTER 3
INSTALLATION **19**
Configuration Before Installation **19**
Configuration of Analog Output Models 19
DIP Switches of Analog Output Models 20
Changing Between DIP and Custom Configuration 21
Configuration of Digital Output Models 21
DIP Switches of Digital Output Models 22
Addressing with BACnet Protocol 23
Addressing with Modbus Protocol 23
Selecting Location **24**
Installing the Mounting Base **25**
Wiring **25**
Wiring GMW93R/RA 27
Wiring GMW93 27
Wiring GMW94R 28
Wiring GMW94 28
Wiring GMW95 29
Connecting Several Transmitters on Same RS-485 Line 29

AKRIBIS · www.akribis.info · contacto@akribis.info

Connecting a Common AC Power Supply to Several Transmitters....30

CHAPTER 4
OPERATION....31
Display....31
Startup Screens....31
Measurement Screen....32
Indicators on the Display....33
Service Port....33
Connecting With an MI70 Indicator....33
Connecting With a Computer....34
Installing the Driver for the USB Service Cable....34
Terminal Application Settings....35
List of Serial Commands....37
Transmitter Information....38
Show Transmitter Information....38
Show Transmitter Firmware Version....38
Show Transmitter Serial Number....38
Show Transmitter Status....39
Show Measured Parameters....41
Show Command Help....41
Show Command List....42
Measurement Settings....42
Set Environmental Parameters....42
Select Units....43
Analog Output Settings....43
Set Analog Output Mode....43
Set Analog Output Scaling....44
Set Output Clipping and Error Limit....45
Display Settings....47
Select Parameters to Display....47
Serial Line Output Commands....48
Start Measurement Output....48
Stop Measurement Output....48
Output a Reading Once....48
Set Output Interval....49
Set Output Format....50
Serial Line Settings....52
Set Remote Echo....52
Set Serial Line Turnaround Delay....52
Calibration and Adjustment Commands....53
Adjust CO_2 Measurement....53
Show Current CO_2 Adjustment....53
1-point Adjustment of CO_2 Measurement....54
2-point Adjustment of CO_2 Measurement....54
Clear User Adjustment of CO_2 Measurement....55
Adjust Humidity Measurement....55
Show Current RH Adjustment....55
1-point Adjustment of RH Measurement....56
2-point Adjustment of RH Measurement....56
Clear User Adjustment of RH Measurement....57
Adjust Temperature Measurement....57
Show Current T Adjustment....57
1-point Adjustment of T Measurement....57

AKRIBIS · www.akribis.info · contacto@akribis.info

Clear User Adjustment of T Measurement 58
Enter Calibration and Adjustment Information 58
Testing Commands 59
Test Analog Outputs 59
Other Commands 60
Enable Advanced Serial Commands 60
Reset Transmitter 60
Set BACnet Parameters 61
Set CO_2 Indicator LED Parameters 62

CHAPTER 5
MAINTENANCE 63
Cleaning 63
Calibration and Adjustment 63
Adjustment Methods 63
Notes for CO_2 Adjustment 64
Using Calibration Gas vs. Ambient Gas 64
Effect of Temperature on CO_2 Measurement 64
Effect of Pressure on CO_2 Measurement 65
Notes for T Adjustment 66
Notes for RH Adjustment 66
Adjustment Using Display and Trimmers 67
Adjustment Using a Hand-Held Meter 68
Adjustment Using a Computer 69
Repair Maintenance 70
Replacing the GM10 Module 70
Replacing the HTM10 Module 72

CHAPTER 6
TROUBLESHOOTING 73
Problem Situations 73
Error Messages 74
Viewing Error Messages on Serial Line 75
View Currently Active Errors 75
View Error Table 75
Error State 76
Reverting to Factory Settings 77
Reverting to Factory Settings Using DIP Switches 77
Reverting to Factory Settings Using Service Port 78
Technical Support 79

CHAPTER 7
TECHNICAL DATA 80
Specifications 80
Spare Parts and Accessories 82
Dimensions in mm 83

APPENDIX A
BACNET REFERENCE 84
BACnet Protocol Implementation Conformance Statement 84

AKRIBIS · www.akribis.info · contacto@akribis.info

Transmitter Models and Objects **86**
Device Object **87**
Carbon Dioxide Object **89**
Temperature Object **90**
Relative Humidity Object **91**
Calculated Humidity Objects **92**
Operation Pressure Object **93**
Operation Altitude Object **94**
BIBBs Supported **95**
Application Services Supported **96**

APPENDIX B
MODBUS REFERENCE **97**

AKRIBIS · www.akribis.info · contacto@akribis.info

List of Figures

Figure 1 GMW90 with Visible Display and Indicator LEDs 12
Figure 2 Transmitter Parts - Outside 15
Figure 3 Opening the Transmitter..... 16
Figure 4 Transmitter Parts – Inside 17
Figure 5 Decorative Cover..... 18
Figure 6 DIP Switch Settings of Analog Output Models 20
Figure 7 DIP Switch Settings of Digital Output Models 22
Figure 8 Example of Transmitter Addressing 23
Figure 9 Selecting Transmitter Location..... 24
Figure 10 Installing the Mounting Base 25
Figure 11 Wiring from Behind (Recommended)..... 26
Figure 12 Wiring from Above..... 26
Figure 13 Wiring GMW93R/RA 27
Figure 14 Alternate Wiring for GMW93R/RA..... 27
Figure 15 Wiring GMW93 27
Figure 16 Wiring GMW94R 28
Figure 17 Wiring GMW94 28
Figure 18 Wiring GMW95 29
Figure 19 Several Transmitters on Same RS-485 Line..... 29
Figure 20 Connecting a Common AC Power Supply 30
Figure 21 GMW95R Startup Screens..... 31
Figure 22 Measurement Screen – Normal Operation 32
Figure 23 Measurement Screen – Problem With Humidity Measurement 32
Figure 24 PuTTY Terminal Application..... 36
Figure 25 Effect of Pressure on CO_2 Reading..... 66
Figure 26 Trimmer Centering Screen 67
Figure 27 Adjustment Screen 67
Figure 28 Disconnecting the GM10 Module 70
Figure 29 Foam Pipe Inside GMW90 71
Figure 30 Replacing the HTM10 Module..... 72
Figure 31 DIP Switch Factory Reset (GMW93/94)..... 77
Figure 32 DIP Switch Factory Reset (GMW95)..... 77
Figure 33 GMW90 Series Dimensions 83
Figure 34 Dimensions of the Mounting Base 83

AKRIBIS · www.akribis.info · contacto@akribis.info

List of Tables

Table 1 Manual Revisions 8
Table 2 Related Manuals 8
Table 3 Applicable Patents 10
Table 4 GMW90 Series Transmitters 13
Table 5 Parameters Supported by GMW90 Series 14
Table 6 Serial Interface Settings 35
Table 7 Basic Serial Commands 37
Table 8 Advanced Serial Commands 37
Table 9 FORM Command Parameters 51
Table 10 FORM Command Modifiers 51
Table 11 Effect of Elevation on CO_2 Measurement 65
Table 12 Troubleshooting Table 73
Table 13 Error Messages 74
Table 14 Performance 80
Table 15 Operating Environment 81
Table 16 Inputs and Outputs 81
Table 17 Mechanics 81
Table 18 GMW90 Series Spare Parts and Accessories 82
Table 19 Device Object Properties 87
Table 20 Carbon Dioxide Object Properties 89
Table 21 Status Flags 89
Table 22 Reliability 89
Table 23 Event State 89
Table 24 Temperature Object Properties 90
Table 25 Status Flags 90
Table 26 Reliability 90
Table 27 Event State 90
Table 28 Relative Humidity Object Properties 91
Table 29 Status Flags 91
Table 30 Reliability 91
Table 31 Event State 91
Table 32 Calculated Humidity Objects 92
Table 33 Calculated Humidity Object Properties 92
Table 34 Status Flags 92
Table 35 Reliability 93
Table 36 Event State 93
Table 37 Operation Pressure Object Properties 93
Table 38 Status Flags 93
Table 39 Operation Altitude Object Parameters 94
Table 40 Status Flags 94
Table 41 BACnet Smart Sensor BIBBs Support 95
Table 42 BACnet Standard Application Services Support 96
Table 43 Modbus Functions Supported by GMW90 97
Table 44 GMW90 Modbus Measurement Data Registers 97
Table 45 GMW90 Modbus Status Registers (Read-only) 98
Table 46 GMW90 Modbus Error Code Bits 98
Table 47 GMW90 Modbus Configuration Parameter Registers 98
Table 48 GMW90 Modbus Device Identification 99
Table 49 GMW90 Modbus Exception Responses 99

AKRIBIS · www.akribis.info · contacto@akribis.info

CHAPTER 1

GENERAL INFORMATION

This chapter provides general notes for the manual and the products that are covered.

About This Manual

This manual provides information for installing, operating, and maintaining GMW90 series transmitters. All transmitter models in the series are covered, which means that some information in the manual is model-specific.

Contents of This Manual

This manual consists of the following chapters:

- Chapter 1, General Information, provides general notes for the manual and the products that are covered.
- Chapter 2, Product Overview, introduces the GMW90 series transmitters.
- Chapter 3, Installation, provides you with information that is intended to help you install the GMW90 series transmitters.
- Chapter 4, Operation, contains information that is needed to operate the GMW90 series transmitters.
- Chapter 5, Maintenance, provides information that is needed in basic maintenance of the GMW90 series.
- Chapter 6, Troubleshooting, describes possible problems, their probable causes and remedies, and provides contact information for technical support.
- Chapter 7, Technical Data, provides the technical data of the GMW90 series transmitters.
- Appendix A, BACnet Reference, describes the BACnet protocol implementation of the GMW90 series digital transmitters.
- Appendix B, Modbus Reference, describes the Modbus protocol implementation of the GMW90 series digital transmitters.

AKRIBIS · www.akribis.info · contacto@akribis.info

Version Information

Table 1 Manual Revisions

Manual Code	Description
M211659EN-C	April 2016. This manual. Updated sections: - Transmitter Parts on page 15. - Configuration of Analog Output Models on page 19. - Selecting Location on page 24. - Effect of Pressure on CO_2 Measurement on page 65. - Replacing the GM10 Module on page 70. - Technical Data on page 80. - Modbus Reference on page 97.
M211659EN-B	April 2014.Previous version. Added transmitter models with analog outputs. Updated BACnet reference appendix.
M211659EN-A	November 2013. First version.

Related Manuals

Table 2 Related Manuals

Manual Code	Manual Name
M211511EN	HMW90 and GMW90 Series Quick Guide for Digital Output models
M211398EN	HMW90 and GMW90 Series Quick Guide for Analog Output models
M211476EN	Decorative Cover Quick Guide
M211606EN	Decorative Cover Printable Insert

Documentation Conventions

Throughout the manual, important safety considerations are highlighted as follows:

WARNING Warning alerts you to a serious hazard. If you do not read and follow instructions very carefully at this point, there is a risk of injury or even death.

CAUTION Caution warns you of a potential hazard. If you do not read and follow instructions carefully at this point, the product could be damaged or important data could be lost.

NOTE Note highlights important information on using the product.

AKRIBIS · www.akribis.info · contacto@akribis.info

Safety

The transmitter delivered to you has been tested and approved as shipped from the factory. Note the following precautions:

WARNING	Connect only de-energized wires.

CAUTION	If you connect more than one transmitter to a single 24 VAC transformer, always connect the phase (~) to the +Vs connector in each transmitter.

CAUTION	The trimmers only turn 135 degrees each way, less than half a rotation. Do not force the trimmer past the stopping point.

CAUTION	Do not modify the unit. Improper modification can damage the product or lead to malfunction.

ESD Protection

Electrostatic Discharge (ESD) can cause immediate or latent damage to electronic circuits. Vaisala products are adequately protected against ESD for their intended use. It is possible to damage the product, however, by delivering electrostatic discharges when touching, removing, or inserting any objects inside the equipment housing.

To make sure you are not delivering high static voltages yourself:

- When installing the transmitter, do not touch exposed contacts on the component board.
- Handle ESD sensitive components on a properly grounded and protected ESD workbench.
- Always hold component boards by the edges and avoid touching the component contacts.

AKRIBIS · www.akribis.info · contacto@akribis.info

Recycling

Recycle all applicable material.

Dispose of the unit according to statutory regulations.
Do not dispose of with regular household refuse.

Regulatory Compliances

GMW90 series transmitters comply with the following performance and environmental test standards:

- EMC Directive

Conformity is shown by compliance with the following standards:

- EN 61326-1: Electrical equipment for measurement, control, and laboratory use – EMC requirements – for use in industrial locations.
- EN 550022: Information technology equipment – Radio disturbance characteristics – Limits and methods of measurement.

Patent Notice

GMW90 series are protected by the following patents and their corresponding national rights:

Table 3 Applicable Patents

Patent Issued By	Patent Number
United States Patent and Trademark Office	US 5,827,438
	US 6,177,673
European Patent Office	EP0776023
	EP0922972
German Patent and Trade Mark Office	69615635
Japan Patent Office	4263285
Finnish Patent Office	112005
	105598

AKRIBIS · www.akribis.info · contacto@akribis.info

Trademarks

CARBOCAP® is a registered trademark of Vaisala Oyj.

All other trademarks are the property of their respective owners.

Software License

This product contains software developed by Vaisala. Use of the software is governed by license terms and conditions included in the applicable supply contract or, in the absence of separate license terms and conditions, by the General License Conditions of Vaisala Group.

Warranty

Visit our Internet pages for standard warranty terms and conditions: www.vaisala.com/warranty.

Please observe that any such warranty may not be valid in case of damage due to normal wear and tear, exceptional operating conditions, negligent handling or installation, or unauthorized modifications. Please see the applicable supply contract or Conditions of Sale for details of the warranty for each product.

AKRIBIS · www.akribis.info · contacto@akribis.info

CHAPTER 2

PRODUCT OVERVIEW

This chapter introduces the GMW90 series transmitters.

Introduction to GMW90 Series

GMW90 series transmitters are wall-mount transmitters for building automation applications. All GMW90 series transmitters measure carbon dioxide (CO_2) and temperature (T), and some models also include humidity measurement. The CO_2 measurement is based on a new generation CARBOCAP® sensor, which uses a novel, silicon-based microchip emitter instead of an incandescent light bulb.

All transmitter models in the series share the following common features:

- Detachable mounting base for easy installation and wiring.
- Display (visible or hidden behind the cover).
- Sliding cover for accessing maintenance functions.
- Adjustment trimmers.
- DIP switches for most common configuration tasks.
- RS-485 line for temporary service use with hand-held MI70 indicator or PC.

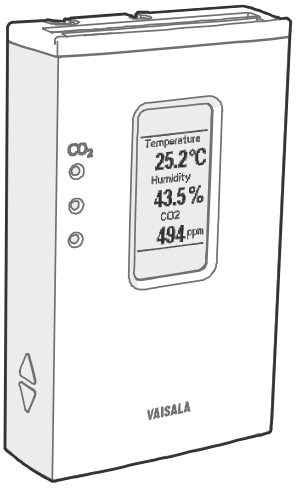

1310-036

Figure 1 GMW90 with Visible Display and Indicator LEDs

AKRIBIS · www.akribis.info · contacto@akribis.info

GMW90 Series Transmitters

Table 4 below lists the most important differences between the GMW90 series transmitter models. For technical specifications, see Chapter 7, Technical Data, on page 80.

Table 4 GMW90 Series Transmitters

Model	Measurement	Output	Display Visible	CO_2 LEDs
GMW93	CO_2, temperature	2 x analog (0 ... 5/10V)	No	No
GMW93D	CO_2, temperature	2 x analog (0 ... 5/10V)	Yes	No
GMW93R	CO_2, humidity, temperature	3 x analog (0 ... 5/10V)	No	No
GMW93RD	CO_2, humidity, temperature	3 x analog (0 ... 5/10V)	Yes	No
GMW93RA	CO_2, humidity, temperature	3 x analog (0 ... 5/10V)	Yes	Yes
GMW94	CO_2, temperature	2 x analog (0/4 ... 20 mA)	No	No
GMW94D	CO_2, temperature	2 x analog (0/4 ... 20 mA)	Yes	No
GMW94R	CO_2, humidity, temperature	3 x analog (0/4 ... 20 mA)	No	No
GMW94RD	CO_2, humidity, temperature	3 x analog (0/4 ... 20 mA)	Yes	No
GMW95	CO_2, temperature	Digital (Modbus/BACnet)	No	No
GMW95D	CO_2, temperature	Digital (Modbus/BACnet)	Yes	No
GMW95R	CO_2, humidity, temperature	Digital (Modbus/BACnet)	No	No
GMW95RD	CO_2, humidity, temperature	Digital (Modbus/BACnet)	Yes	No
GMW90*	CO_2, temperature	Configurable (digital or analog)	Optional	Optional
GMW90R*	CO_2, humidity, temperature	Configurable (digital or analog)	Optional	Optional

* Factory configurable model. See order form for details.

AKRIBIS · www.akribis.info · contacto@akribis.info

Output Parameters Explained

Table 5 Parameters Supported by GMW90 Series

Parameter	Symbol	Unit(s)	Description
Carbon dioxide	CO2	ppm	Concentration of carbon dioxide gas (CO_2).
Temperature	T	°C °F	Temperature in Celsius or Fahrenheit scale.
Relative humidity	RH	%	Ratio of the partial pressure of water vapor in the air to the saturation vapor pressure of air at the current temperature.
Dewpoint	Td	°C °F	Temperature at which the water vapor in the air will condense into water at the current pressure.
Dewpoint	Tdf	°C °F	Same as Td, except when the dewpoint is below 0 °C, the transmitter outputs frostpoint (Tf) instead of dewpoint.
Dewpoint depression	dTd	°C °F	Difference between ambient temperature and dewpoint (Tdf).
Wet bulb temperature	Tw	°C °F	The minimum temperature that can be reached by evaporative cooling in the current conditions.
Absolute humidity	a	g/m3 gr/ft3	Quantity of water in a cubic meter (or cubic foot) of air.
Mixing ratio	x	g/kg gr/lb	Ratio of water vapor mass per kilogram (or pound) of dry air.
Enthalpy	h	kJ/kg btu/lb	Sum of the internal energy of a thermodynamic system.

NOTE All of these parameters are visible and selectable using the service port (serial line and MI70 indicator use) even if your transmitter model does not have a humidity sensor. However, the transmitter will not show any measurement results for parameters that it cannot measure or calculate.

AKRIBIS · www.akribis.info · contacto@akribis.info

Transmitter Parts

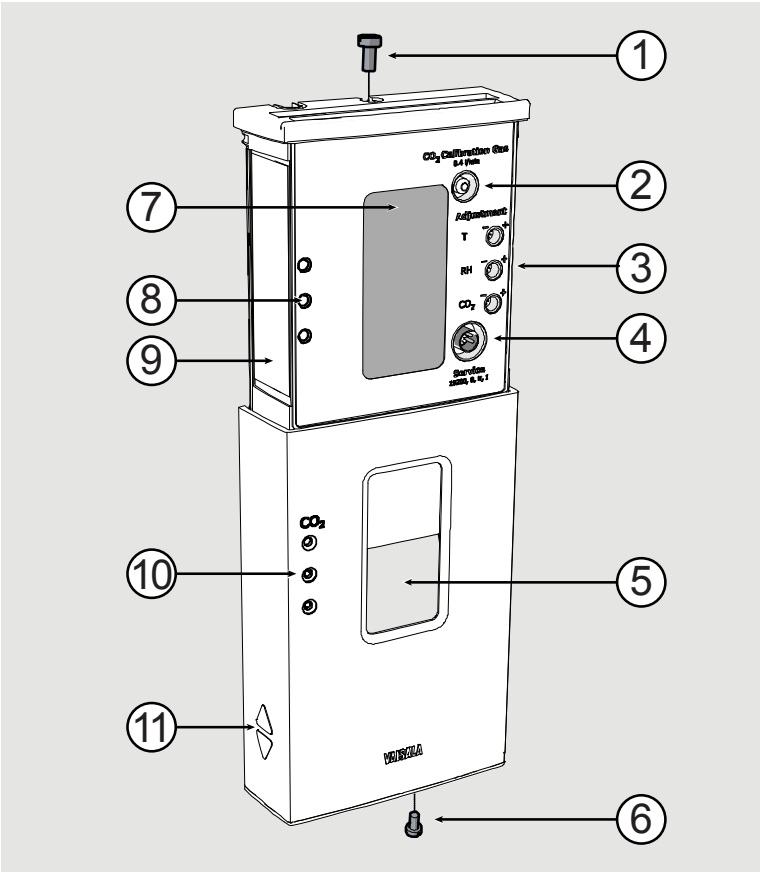

Figure 2 Transmitter Parts - Outside

1 = Locking screw for mounting base (M3×6).
2 = Inlet for CO_2 calibration gas.
Use a 3 mm inner diameter silicone tube and 0.4 l/min flow.
3 = Adjustment trimmers.
4 = Service port.
5 = Window for display (only in models where the display is visible)
6 = Locking screw for slide (M3×6).
7 = Display.
8 = CO_2 level indicator LEDs. Enabled on models with LED option.
Default settings:

- Green LED (bottom): lit between 0 ... 800 ppm CO_2.
- Yellow LED (middle): lit between 800 ... 1200 ppm CO_2.
- Red LED (top): lit between 1200 ... 5000 ppm CO_2, blinking at > 5000 ppm CO_2.

9 = Type label.
10 = Holes for indicator LEDs (only in models with LED option).
11 = Grip for slide.

AKRIBIS · www.akribis.info · contacto@akribis.info

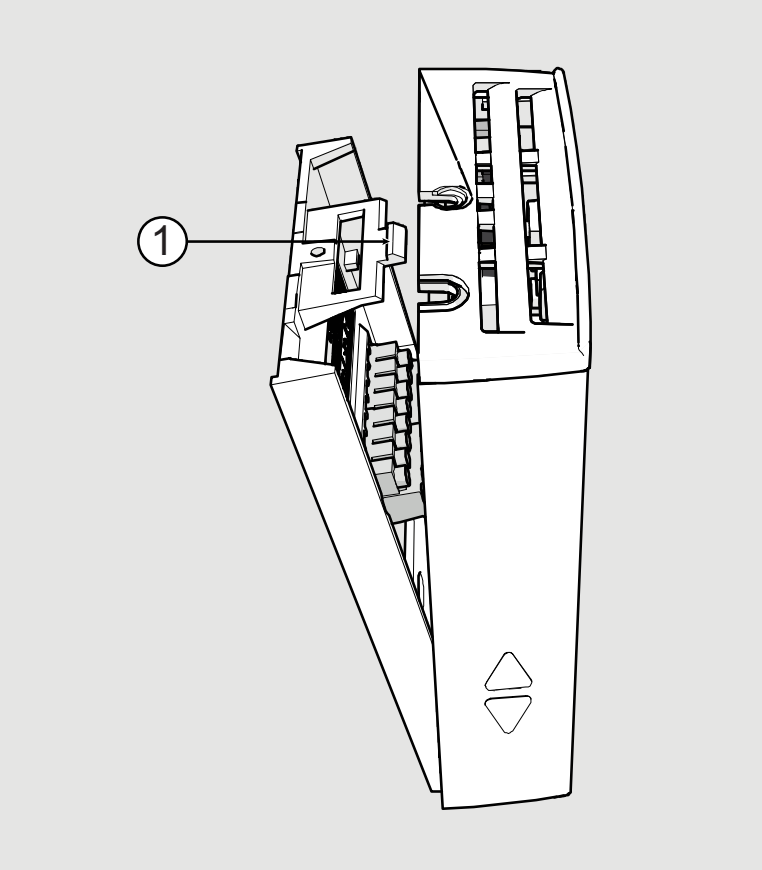

1201-005

Figure 3 Opening the Transmitter

1 = Push tab down with a screwdriver to open the transmitter.

To open, use a screwdriver to push down the tab that holds the transmitter cover and mounting base together. Pull the mounting base away from the cover, starting from the top.

To close, connect the bottom of the transmitter first, and tilt the top forward to close the tab. Do not push on the display. Closing the transmitter starts it up if power is supplied to the screw terminals.

CAUTION	When opening or closing the transmitter, avoid damaging the transmitter electronics with the two plastic supports on the mounting base.

AKRIBIS · www.akribis.info · contacto@akribis.info

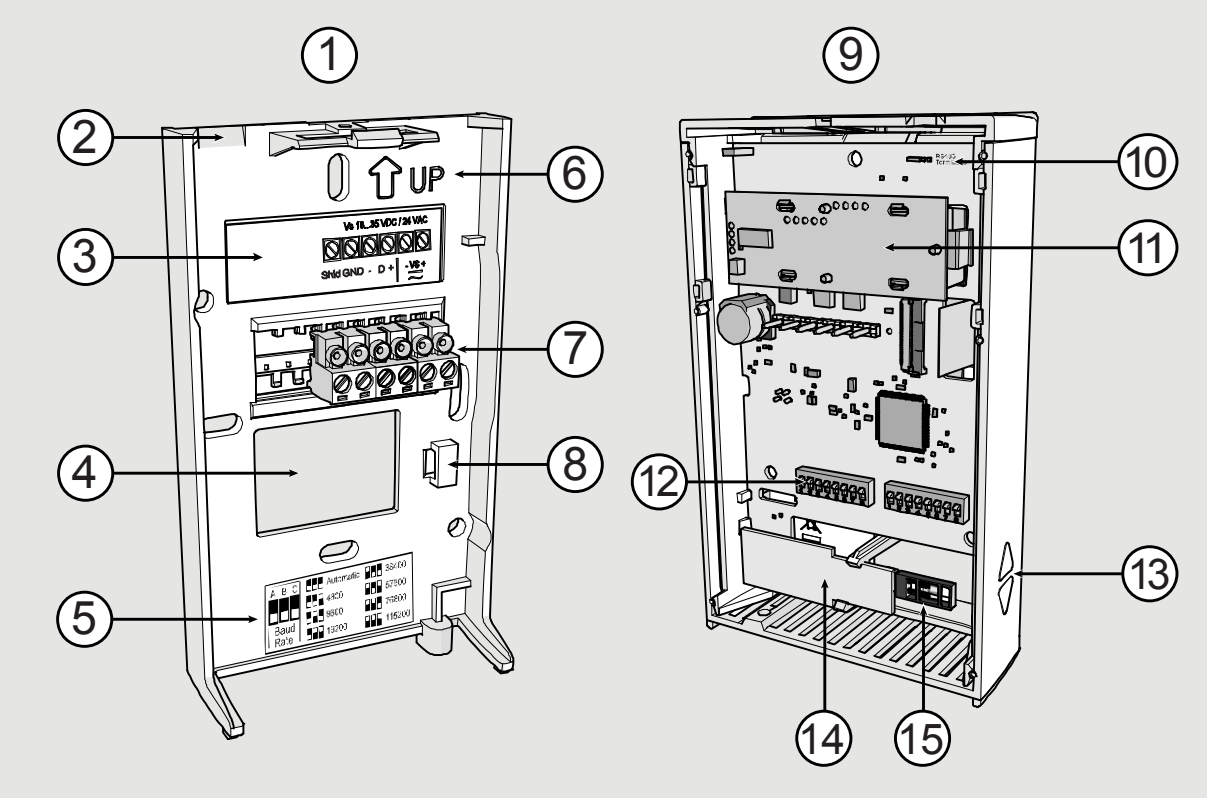

1310-039

Figure 4 Transmitter Parts – Inside

1 = Mounting base.
2 = Opening for cable (wiring from top).
3 = Terminal label.
4 = Opening for cable (wiring from behind, recommended).
5 = Label for RS-485 baud rate DIP switch settings. Included only on digital models.
6 = Orientation arrow – should point up after the mounting base has been installed.
7 = Screw terminals.
8 = Place for zip tie (for cable strain relief)
9 = Transmitter body.
10 = RS-485 termination jumper (connects a 120 Ω resistor). Included only on digital models.
11 = GM10 module (measures CO_2).
12 = DIP switches for common configuration options. Digital models have an extra DIP switch bank for transmitter address.
13 = Grip for slide.
14 = TM10 module (measures temperature only) or HTM10 module (measures humidity and temperature).
15 = HUMICAP® sensor (on models with humidity measurement).

AKRIBIS · www.akribis.info · contacto@akribis.info

Decorative Cover Option

The decorative cover is an installation accessory for HMW90 and GMW90 series transmitters that can be used to hide the transmitter from view. The cover material is transparent polycarbonate, but the idea is to customize it to match the wall the transmitter is on. There are two easy ways to change the cover's appearance:

- Paint the cover to the same color as the wall.
- Insert a piece of wallpaper under the lid.

You can also use the cover as a holder for printed material, for example an informational sign.

You must remove the sliding cover of the transmitter to install the decorative cover. Installation instructions are included with the cover.

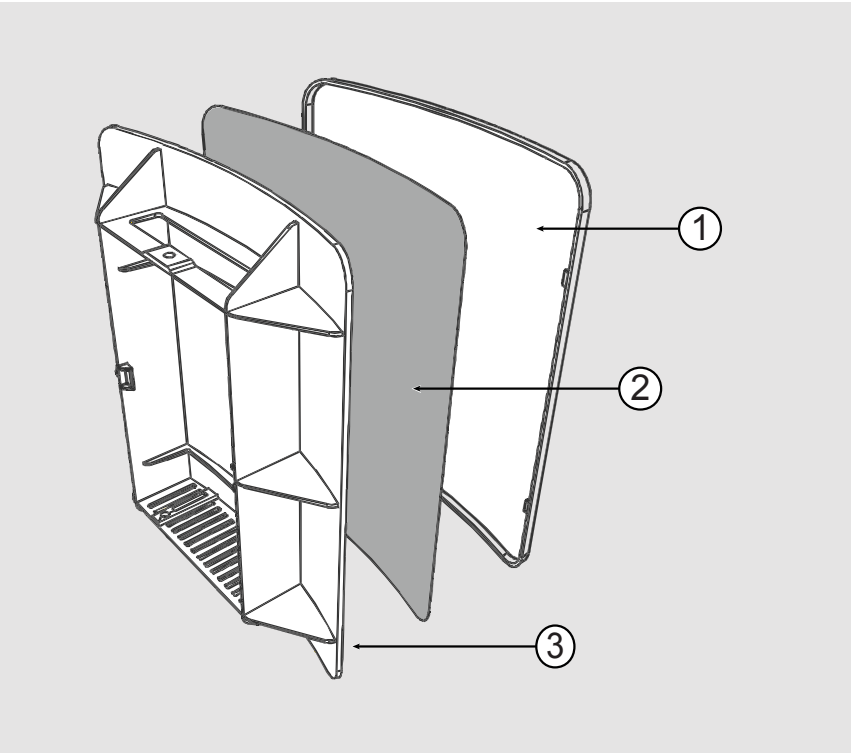

1310-042

Figure 5 Decorative Cover

1 = Decorative cover lid. If you intend to paint the cover, paint the outer surface of this part, and leave the other part entirely unpainted.
2 = Space for wallpaper or printed insert. The decorative cover is delivered with a quick guide that can be used as a stencil for cutting the required shape.
3 = Decorative cover base part.

AKRIBIS · www.akribis.info · contacto@akribis.info

CHAPTER 3

INSTALLATION

This chapter provides you with information that is intended to help you install the GMW90 series transmitters.

Configuration Before Installation

If you need to change the settings of the transmitter, it is best to do this before it has been installed. Available configuration options are different for analog output models (such as GMW93) and digital output models (for example, GMW95).

Configuration of Analog Output Models

You can configure analog output models of GMW90 series transmitters in two ways:

- Using the DIP switches on the component board. See section DIP Switches of Analog Output Models on page 20.
- Configuring the settings in software through the service port. See connection instructions and serial line commands in Chapter 4, Operation, on page 31.

These two configuration methods are mutually exclusive. If the DIP switch configuration is used, software settings have no effect on settings that are controlled by the DIP switches. Additionally, standard analog output settings and display configuration are always set in the DIP configuration mode. DIP switch number 8 is the master switch that controls which configuration method is used.

NOTE	Software version 1.3.1 for analog output models introduced an exception to this. If you have used the AOVER command to configure the behavior of analog outputs when the measured value is outside the scaled output range, your AOVER configuration remains even in DIP switch configuration mode. See Set Output Clipping and Error Limit on page 45.

AKRIBIS · www.akribis.info · contacto@akribis.info

DIP Switches of Analog Output Models

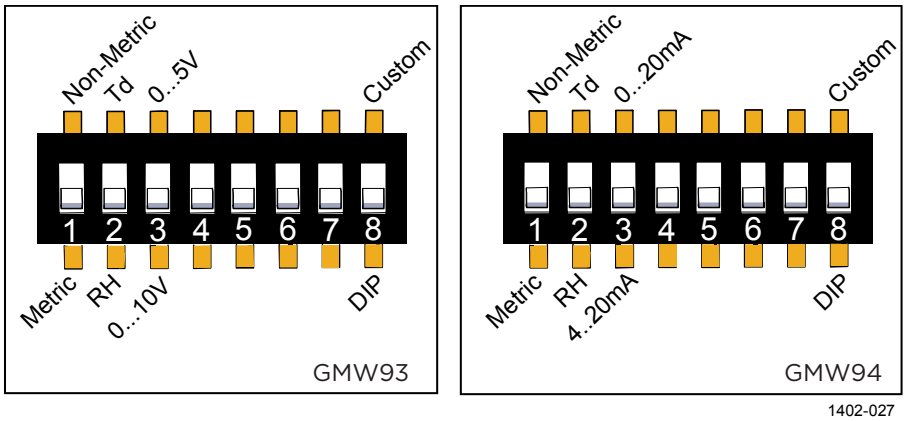

Figure 6 DIP Switch Settings of Analog Output Models

DIP	Position	Setting
1	Non-metric	Non-metric units (°F).
	Metric	Metric units (°C).
2	Td	Td (dewpoint) as humidity parameter on display and analog output. Sets analog output scaling to -20 ... +55 °C.
	RH	RH (relative humidity) as humidity parameter on display and analog output. Sets analog output scaling to 0 ... 100 %RH.
3	0...5V or 0...20 mA	Set analog output channels to 0 ... 5 V (voltage output) or 0 ... 20 mA (current output)
	0...10V or 4...20 mA	Set analog output channels to 0 ... 10 V (voltage output) or 4 ... 20 mA (current output)
4	Not used	
5	Not used	
6	Not used	
7	Not used	
8	Custom	Configuration through service port only.
	DIP	Configuration by DIP switches only. Resets display analog outputs to standard settings.

NOTE If DIP switch 8 is set to **Custom**, the transmitter ignores all other DIP switch settings. In custom mode the transmitter uses settings that are configured in software using the service port. Before changing the position of this switch, see section Changing Between DIP and Custom Configuration on page 21.

AKRIBIS · www.akribis.info · contacto@akribis.info

Changing Between DIP and Custom Configuration

If you change the position of DIP switch 8, note the following:

When changing from **DIP** to **Custom**: The DIP settings that were used when the power was last on are carried over to the custom settings at next power up.

When changing from **Custom** to **DIP**: Current custom settings are overwritten by the settings from the DIP switches at next power up. Display layout and analog outputs are set to default settings:

- Channel 1 output parameter CO_2, scaling 0 ... 2000 ppm.
- Channel 2 output parameter T, scaling -5 ... +55 °C.
- Channel 3 output parameter RH, scaling 0 ... 100 %RH (if humidity measurement is present on the transmitter).

If you have a factory customized transmitter, this may lead to a situation where the wiring label on the mounting base does not reflect the outputs of the transmitter. To return the transmitter to its factory customized settings, follow the instructions in section Reverting to Factory Settings on page 77.

Configuration of Digital Output Models

Digital output models of the GMW90 series have the following configuration interfaces:

- DIP switches on the component board control operating protocol, serial line settings, and transmitter MAC address. For instructions, see DIP Switches of Digital Output Models on page 22.
- You can set a jumper for RS-485 line termination on the component board (120 Ω resistor). For location of the jumper, see Figure 4 on page 17.
- Other settings are configured in software. You can change most configuration settings through the service port. For connection instructions and serial line commands, see Chapter 4, Operation, on page 31.
- Some configuration actions can be done using the BACnet and Modbus protocols. See the following appendices for protocol implementation details:
    - Appendix A, BACnet Reference, on page 84.
    - Appendix B, Modbus Reference, on page 97.

AKRIBIS · www.akribis.info · contacto@akribis.info

DIP Switches of Digital Output Models

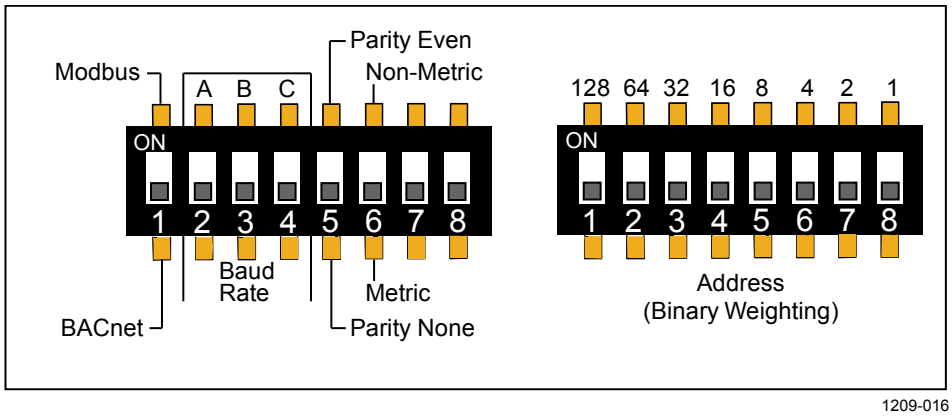

Figure 7 DIP Switch Settings of Digital Output Models

DIP	Position			Setting
1	Modbus			Modbus protocol in use.
	BACnet			BACnet protocol in use.
2 ... 4	A	B	C	Serial line baud rate.
	Off	Off	Off	Automatic (default).
	Off	Off	On	4800 (not available with BACnet protocol)
	Off	On	Off	9600
	Off	On	On	19200
	On	Off	Off	38400
	On	Off	On	57600
	On	On	Off	76800
	On	On	On	115200
5	Parity Even			Select 8 data bits, parity even, one stop bit (8E1) for Modbus protocol.
	Parity None			Select 8 data bits, parity none, and two stop bits (8N2) for Modbus protocol.
6	Non-Metric			Use non-metric units on display and service port. No effect on Modbus and BACnet.
	Metric			Use metric units on display and service port. No effect on Modbus and BACnet.
7	Not used			
8	Not used			

NOTE If the serial line baud rate is set to **Automatic**, the transmitter attempts to determine the baud rate of the traffic in the RS-485 network. The transmitter cycles through all baud rate choices, listening for 10 seconds at each rate. When it detects valid RS-485 traffic, it remains at the detected baud rate until it is reset or power cycled.

AKRIBIS · www.akribis.info · contacto@akribis.info

Dip switches marked **Address (Binary Weighting)** set the MAC address of the GMW90 series digital transmitter. The address is encoded in eight bit binary form, with each numbered switch representing a single bit. For example:

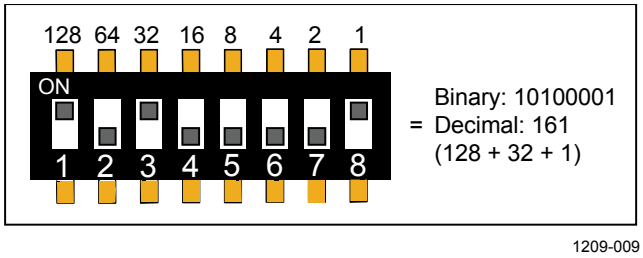

Figure 8 Example of Transmitter Addressing

Addressing with BACnet Protocol

BACnet MS/TP MAC address range is 0 … 255. The transmitter is a BACnet MS/TP master if address is below 128. Otherwise the transmitter is a slave.

Addressing with Modbus Protocol

Transmitter is always a Modbus slave. MAC address range for Modbus slaves is 1 … 247.

AKRIBIS · www.akribis.info · contacto@akribis.info

Selecting Location

The conditions at the location should represent well the area of interest. Do not install the transmitter on the ceiling. Avoid placing the transmitter near heat and moisture sources, close to the discharge of the supply air ducts, and in direct sunlight.

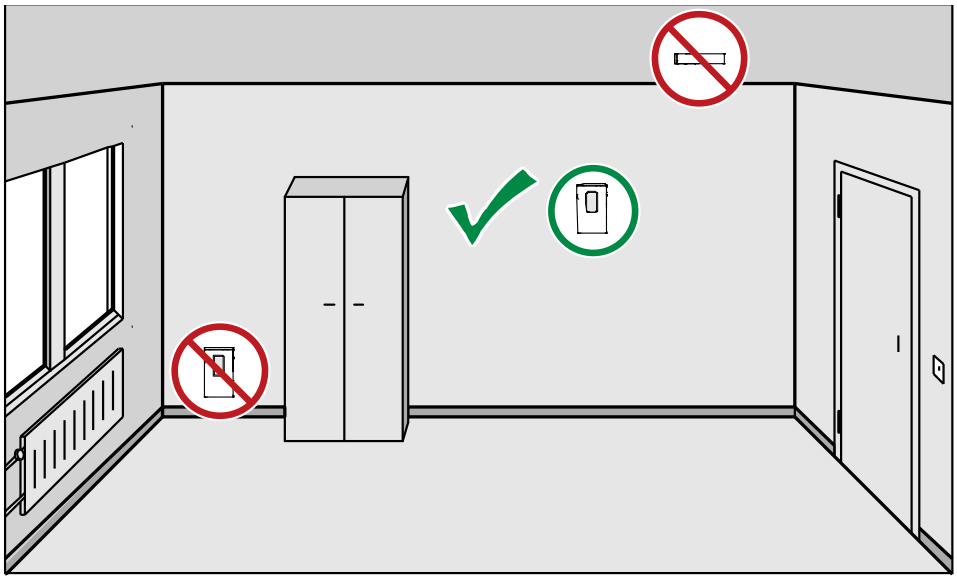

1111-070

Figure 9 Selecting Transmitter Location

Use the mounting holes to attach the mounting base securely. Use at least two screws (not included, max screw diameter 4 mm). Remember to leave sufficient clearance below the transmitter to operate the slide. For mounting dimensions, see section Dimensions in mm on page 83.

NOTE	When bringing a cable through the wall, note that the hole may also supply air from outside the room into the transmitter. This may affect the measurement readings. For example, fresh concrete binds CO_2 and may cause low readings, especially in new buildings. Seal the cable opening if necessary.

NOTE	Ambient pressure has a significant effect on CO_2 measurement. If the elevation of the installation location is more than 100 m (328 ft) from sea level, make sure you are compensating for the effect of lower pressure. See Effect of Pressure on CO_2 Measurement on page 65.

AKRIBIS · www.akribis.info · contacto@akribis.info

Installing the Mounting Base

Use the mounting holes to attach the mounting base securely. Use at least two screws (not included). The arrow on the mounting base must point straight up after installation. **Proper orientation is important**: air must flow through the vents on the bottom and top.

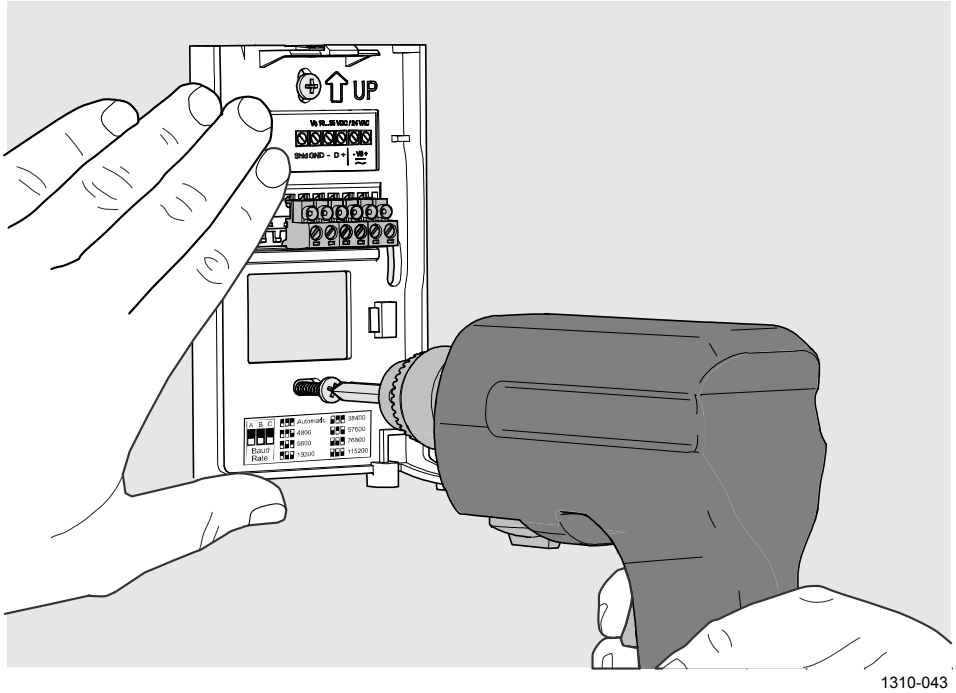

Figure 10 Installing the Mounting Base

Wiring

Connect the wiring to the screw terminals on the mounting base. The supply voltage and terminal assignments are model-specific. Max wire size 2 mm^2 (AWG14).

You can bring the cable to the housing from above or from behind (recommended). If you are wiring a GMW90 series transmitter from above, note that the GM10 module takes up significant space inside the transmitter. To make sure there is enough space to close the transmitter, use a < Ø 5 mm cable, and route it from the left side of the mounting base. See Figure 12 on page 26.

After completing the wiring, connect the transmitter body over the mounting base. Note that mounting bases are model-specific.

WARNING	Connect only de-energized wires.

AKRIBIS · www.akribis.info · contacto@akribis.info

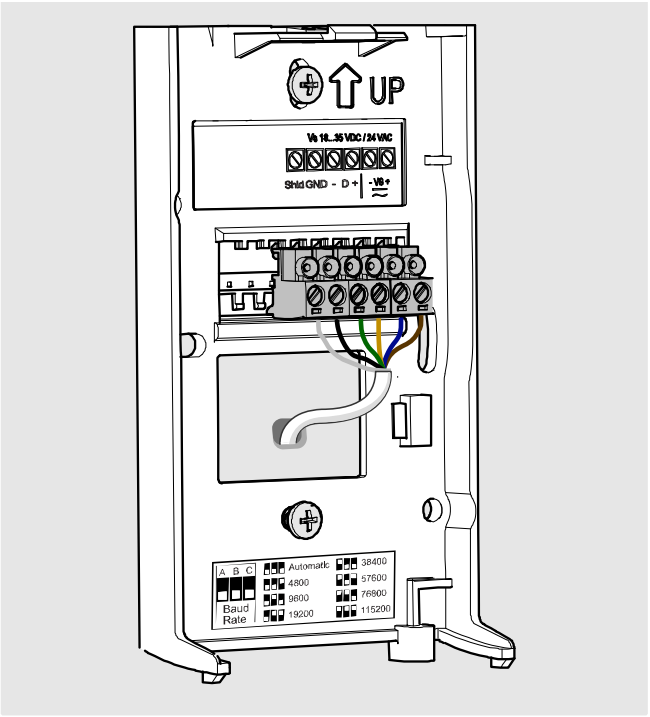

1310-044

Figure 11 Wiring from Behind (Recommended)

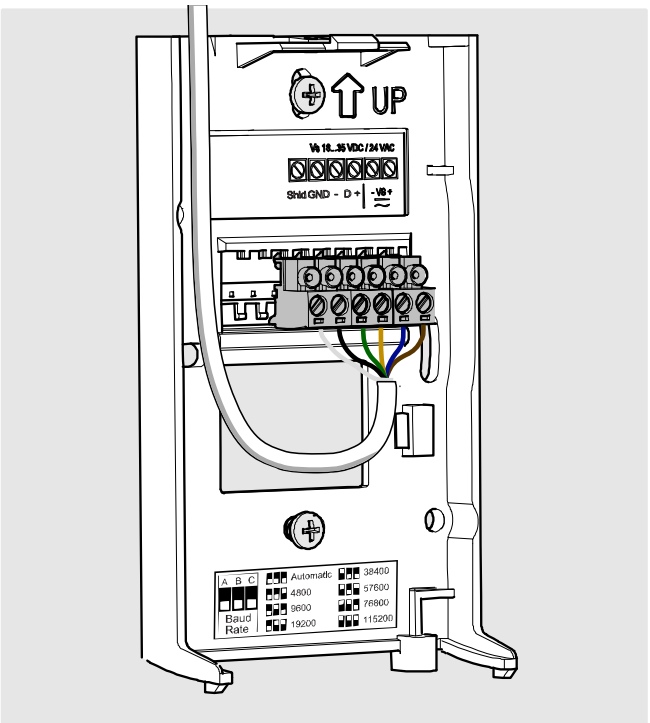

1310-045

Figure 12 Wiring from Above

AKRIBIS · www.akribis.info · contacto@akribis.info

Wiring GMW93R/RA

Recommended wiring for long cables:

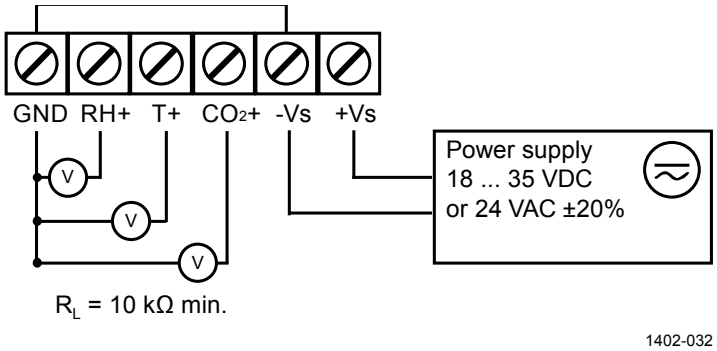

Figure 13 Wiring GMW93R/RA

-Vs terminal is internally connected to GND terminal, so you can also use the -Vs terminal as common ground. Maximum cable resistance is 2.5 Ω (24V supply, 0 ... 10 V output):

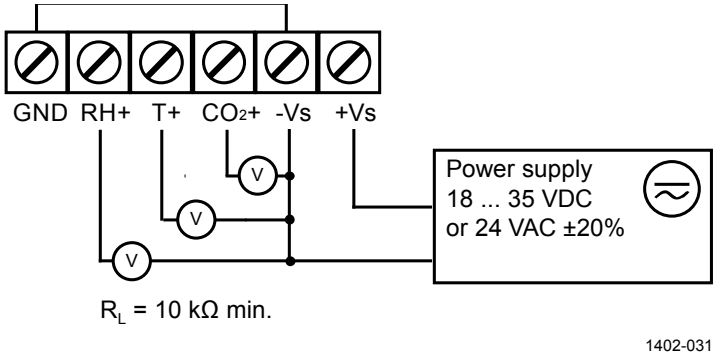

Figure 14 Alternate Wiring for GMW93R/RA

Wiring GMW93

GMW93 is wired in the same way as GMW93R/RA, except for the humidity output that is not present:

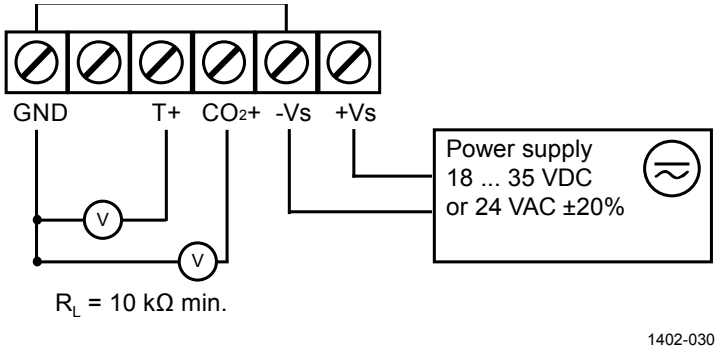

Figure 15 Wiring GMW93

AKRIBIS · www.akribis.info · contacto@akribis.info

Wiring GMW94R

-Vs terminal is internally connected to GND terminal.

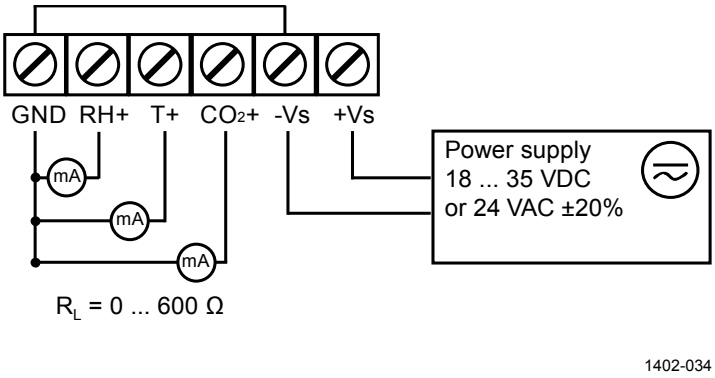

Figure 16 Wiring GMW94R

Wiring GMW94

GMW94 is wired in the same way as GMW94R, except for the humidity output that is not present:

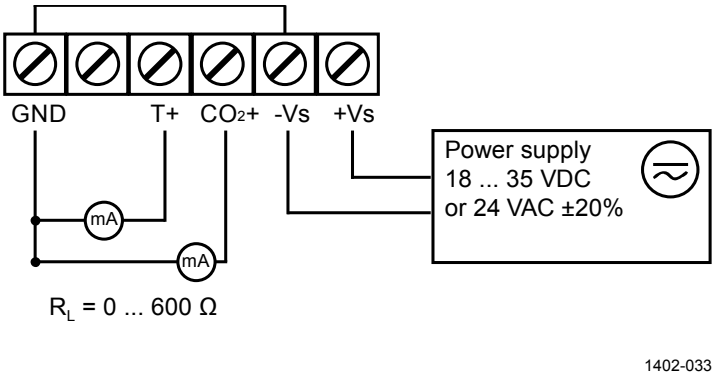

Figure 17 Wiring GMW94

AKRIBIS · www.akribis.info · contacto@akribis.info

Wiring GMW95

The RS-485 line of the transmitter is isolated from the power supply. A separate ground reference terminal (**GND**) is provided for the RS-485 connection.

If you are using a shielded cable, you can use the **Shld** terminal to hold the exposed part of the shield. Note that the Shld terminal is floating (not electrically connected).

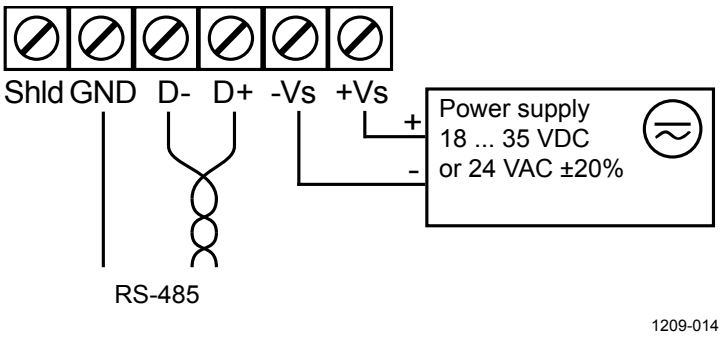

Figure 18 Wiring GMW95

Connecting Several Transmitters on Same RS-485 Line

Set the RS-485 termination jumper to “ON” on the transmitter that is at the end of the line. This terminates the line with a 120 Ω resistor. For location of the jumper, see Figure 4 on page 17.

Connect the cable shield to ground on the building controller side.

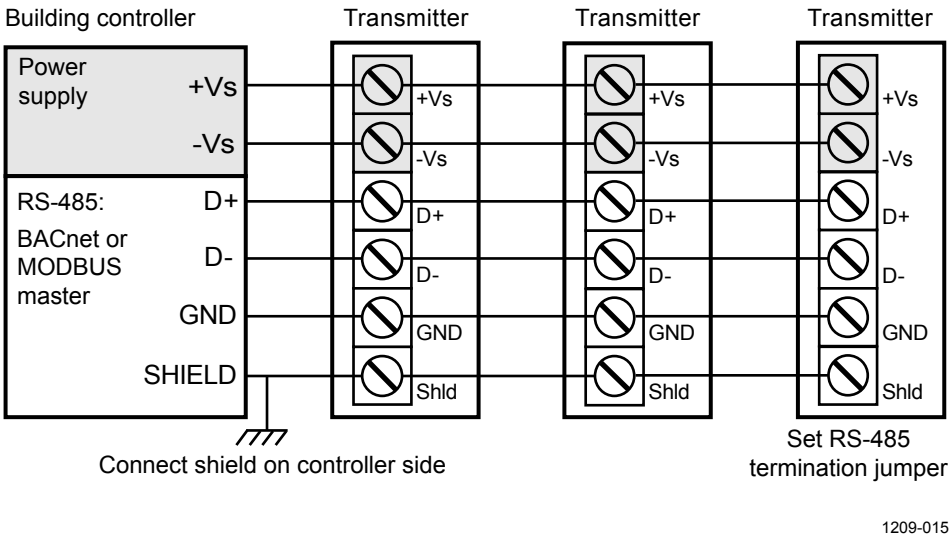

Figure 19 Several Transmitters on Same RS-485 Line

AKRIBIS · www.akribis.info · contacto@akribis.info

Connecting a Common AC Power Supply to Several Transmitters

If you are connecting a common 24 VAC power supply to several transmitters, make sure to connect the same terminal to +Vs and –Vs on all transmitters. This will avoid a short-circuit through the shared common line at the controller; see Figure 20 below.

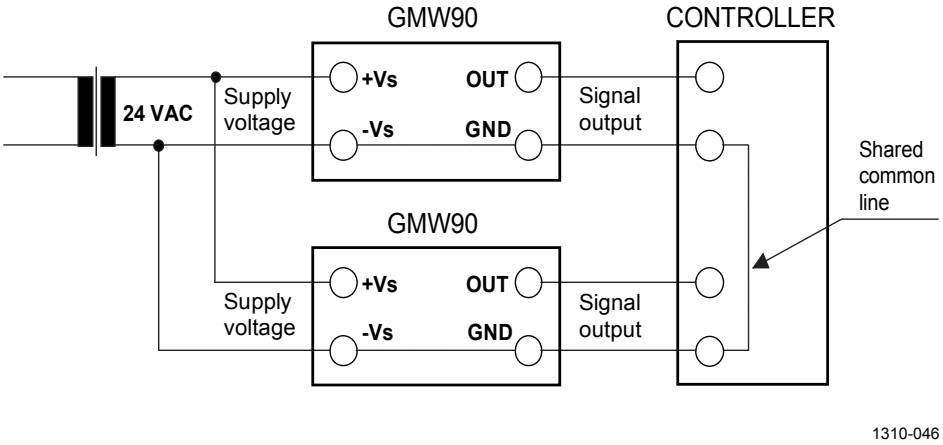

Figure 20 Connecting a Common AC Power Supply

AKRIBIS · www.akribis.info · contacto@akribis.info

CHAPTER 4
OPERATION

This chapter contains information that is needed to operate the GMW90 series transmitters.

Display

Startup Screens

When the transmitter is powered on, it displays a sequence of information screens. The screens are shown for a few seconds each.

The first screen identifies the transmitter and the connected measurement modules, and shows if the transmitter is operating normally (status OK) or if there is an error (status ERROR).

The following screens show configuration information that is relevant to the outputs of the transmitter. Transmitters with digital output show information on the selected communication protocol (BACnet or Modbus). Transmitters with analog output show the analog output mode and scaling.

The last screen shows the currently configured pressure compensation setting.

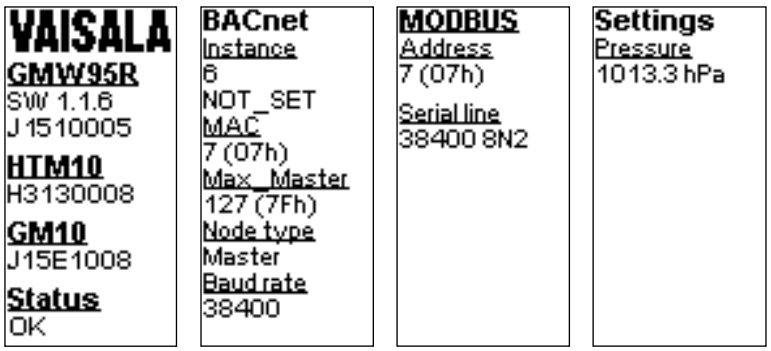

1310-049, 1310-047

Figure 21 GMW95R Startup Screens

After the startup screens the transmitter shows the measurement screen. It shows the measured parameters and currently active indicators.

AKRIBIS · www.akribis.info · contacto@akribis.info

Measurement Screen

Measurement screen shows the measured parameters and currently active indicators.

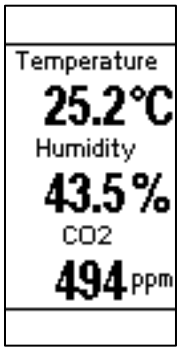

1310-040

Figure 22 Measurement Screen – Normal Operation

If there is a problem with measurement, affected readings are replaced with stars. The alarm indicator and an error message will also appear on the screen.

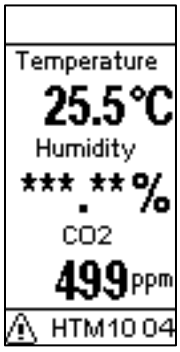

1310-041

Figure 23 Measurement Screen – Problem With Humidity Measurement

AKRIBIS · www.akribis.info · contacto@akribis.info

Indicators on the Display

Indicator	Position on Screen	Meaning
	Top right	Communication arrows. Shown only on models with digital output. Down arrow is shown when transmitter detects valid traffic on the RS-458 line. Up arrow is shown when transmitter is transmitting to the RS-485 line.
	Top left	MI70 connection indicator. Is shown when an MI70 Indicator is connected to the service port.
	Bottom left	Alert indicator and error text. Is shown if an error is active. The error message is written after the indicator. See section Error Messages on page 74.

Service Port

You can connect to the service port on the GMW90 series transmitters using a computer or an MI70 indicator. The MI70 indicator is the hand-held display device that is included with, for example, the Vaisala CARBOCAP® Hand-Held Carbon Dioxide Meter GM70.

CAUTION The service port is not galvanically isolated from the rest of the transmitter electronics. Connect only equipment with a floating power supply (not grounded) to the service port. If you connect a device that is grounded to a different potential than the transmitter's power supply, you will affect the accuracy of the transmitter's analog outputs. You may even affect the transmitter's functionality or cause damage to the transmitter.

Connecting With an MI70 Indicator

When connecting using an MI70 indicator, use the connection cable for GM70 hand-held meter (Vaisala order code 219980). The following functionality is available when using the MI70:

- Standard MI70 functions such as viewing, logging, and graphs of measurement results.
- Calibration and adjustment fuctions for the transmitter. For more information, see section Adjustment Using a Hand-Held Meter on page 68.
- Setting of the pressure compensation value for carbon dioxide and humidity measurement (**Environment** menu in the MI70).

AKRIBIS · www.akribis.info · contacto@akribis.info

Connecting With a Computer

Connecting with a computer allows you to configure and troubleshoot your transmitter using serial line commands. For a list of commands, see section List of Serial Commands on page 37.

When connecting using a computer, use the Vaisala USB cable (Vaisala order code 219690) and a suitable terminal application:

- If you have not used the Vaisala USB cable before, install the driver before attempting to use the cable. Refer to section Installing the Driver for the USB Service Cable on page 34 for detailed instructions.
- For more information on using a terminal application, see section Terminal Application Settings on page 35.

Installing the Driver for the USB Service Cable

Before taking the USB service cable into use, you must install the provided USB driver on your computer (requires Windows).
When installing the driver, you must acknowledge any security prompts that may appear.

1. Check that the USB service cable is not connected. Disconnect the cable if you have already connected it.
2. Insert the media that came with the cable, or download the latest driver from www.vaisala.com/software.
3. Execute the USB driver installation program (setup.exe), and accept the installation defaults. The installation of the driver may take several minutes.
4. After the driver has been installed, connect the USB service cable to a USB port on your computer. Windows will detect the new device, and use the driver automatically.
5. The installation has reserved a COM port for the cable. Verify the port number, and the status of the cable, using the **Vaisala USB Instrument Finder** program that has been installed in the Windows Start menu.

Windows will recognize each individual cable as a different device, and reserve a new COM port. Remember to use the correct port in the settings of your terminal program.

AKRIBIS · www.akribis.info · contacto@akribis.info

Terminal Application Settings

The serial interface settings of the service port are presented in Table 6 below. The settings are fixed, and cannot be changed by the user.

Table 6 Serial Interface Settings

Property	Description / Value
Baud rate	19200
Parity	None
Data bits	8
Stop bits	1
Flow control	None

The steps below describe how to connect to the transmitter using the PuTTY terminal application for Windows (available for download at www.vaisala.com/software) and a USB serial interface cable:

1. Connect the USB serial interface cable between your computer and the service port of the transmitter.
2. Start the PuTTY application.
3. Select the **Serial** settings category, and check that the correct COM port is selected in the **Serial line to connect to** field.

   Note: You can check which port the USB cable is using with the **Vaisala USB Instrument Finder** program that has been installed in the Windows Start menu.
4. Check that the other serial settings are correct for your connection, and change if necessary. **Flow control** should be set to **None** unless you have a reason to change it.
5. Click the **Open** button to open the connection window and start using the serial line.

NOTE If PuTTY is unable to open the serial port you selected, it will show you an error message instead. If this happens, restart PuTTY and check the settings.

6. You may need to adjust the **Local echo** setting in the **Terminal** category to see what you are typing on the serial line. You must enable either local echo (on the terminal side) or remote echo (on the transmitter side, adjustable using the **ECHO** command).

   To access the configuration screen while a session is running, click the right mouse button over the session window, and select **Change Settings...** from the pop-up menu.

AKRIBIS · www.akribis.info · contacto@akribis.info

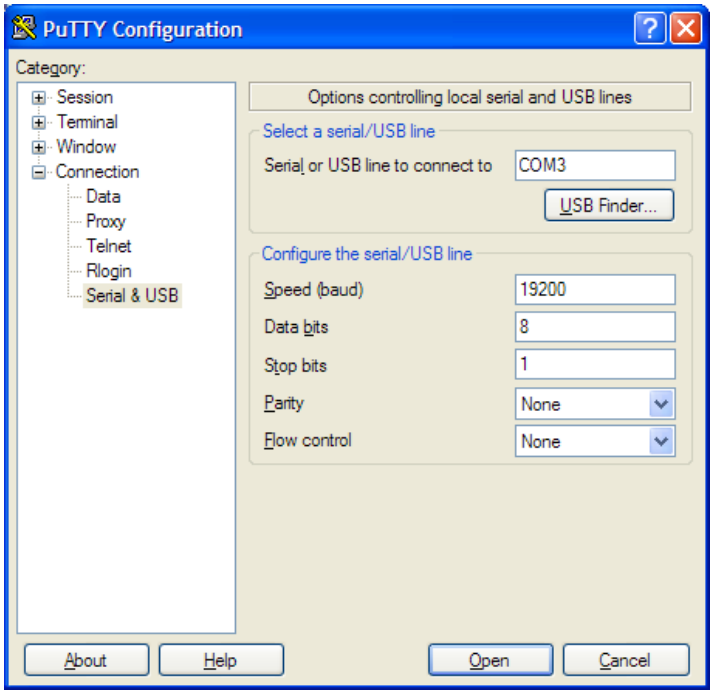

0807-004

Figure 24 PuTTY Terminal Application

AKRIBIS · www.akribis.info · contacto@akribis.info

List of Serial Commands

All commands can be issued either in uppercase or lowercase. In the command examples, the keyboard input by the user is in **bold** type.

The notation <cr> refers to pressing the carriage return (**Enter**) key on your computer keyboard. Enter a <cr> to clear the command buffer before starting to enter commands.

Some commands, such as **CRH**, are not available if the required feature is not present on the transmitter, or the command is not relevant.

Table 7 Basic Serial Commands

Command	Description
?	Show transmitter information.
CALCS	Show all measured and calculated parameters.
ECHO	Show or set remote echo mode.
ENV	Show or set environmental parameters.
ERRT	Show error table.
ERRS	Show currently active errors.
FORM [modifier string]	Show or set output format.
HELP	Show list of currently available serial commands.
INTV [0 ... 9999 s/min/h]	Set continuous output interval for R command.
PASS [9000]	Access advanced serial commands.
R	Start the continuous outputting.
RESET	Reset the transmitter.
S	Stop the continuous outputting.
SDELAY [0 ... 255]	Show or set serial line turnaround delay in milliseconds.
SEND	Output measurement message once.
SNUM	Show transmitter serial number.
STATUS	Show transmitter status.
UNIT [m/n]	Select metric or non-metric units.
VERS	Show transmitter firmware version.

Table 8 Advanced Serial Commands

Command	Description
AMODE	Show or set analog output mode.
AOVER	Show or set analog output overrange and clipping behavior.
ASEL	Show or set analog output parameter.
ATEST	Test analog putput.
BACNET	Show or set BACnet parameters.
CCO2	Calibrate and adjust CO_2 measurement.
CDATE	Show or set calibration date.
CRH	Calibrate and adjust RH measurement.
CT	Calibrate and adjust T measurement.
CTEXT	Show or set calibration information.
DSEL	Select parameters to display on screen.
FRESTORE	Restore transmitter to factory settings.
TRAF	Show or set CO_2 indicator LED parameters.

AKRIBIS · www.akribis.info · contacto@akribis.info

Transmitter Information

Show Transmitter Information

The **?** command outputs a listing of device information.

?<cr>

Example:

```
>?
Device              : GMW95R
SW version          : 1.1.28.5849
SNUM                : H2930002

HTM10 module information
Software version    : 0.11.1
SNUM                : H2950107

GM10 module information
Software version    : 1.1.0
SNUM                : J04C030105
```

Show Transmitter Firmware Version

Use the **VERS** command to show the transmitter model and firmware version.

VERS<cr>

Example:

```
>vers
GMW95R / 1.1.28
```

Show Transmitter Serial Number

Use the **SNUM** command to show the transmitter serial number.

SNUM<cr>

Example:

```
>snum
Serial number       : H2930002
```


AKRIBIS · www.akribis.info · contacto@akribis.info

Show Transmitter Status

Use the **STATUS** command to view detailed information on transmitter model and configuration.

STATUS [*function*]<cr>

where

Function = Optional switch to display a more detailed status for BACnet or Modbus protocol (available on transmitter models with digital output). Available switches are `-bacnet` and `-modbus`.

Example (display detailed BACnet status):

```
>status -bacnet
* BACnet module (BACNET) *
BACnet protocol     : active
MAC                 : 0 (00h)
Device Instance     : 6 (00000006h)
Name                : GMW95R_ H2930002
Location            : Location
Description         : Description
MAX_MASTER          : 127 (7Fh)
Node type           : Master
Baud setting        : Auto
Current baudrate    : 19200 8N1
Baudrate locked     : No
Baud detection interval: 10 s
DCC                 : Communication enabled
Valid frames        : 0
Invalid frames      : 0
Unwanted frames     : 0
Lost tokens         : 0
Failed TX           : 0
```


AKRIBIS · www.akribis.info · contacto@akribis.info

Example (display full status):

```
>status
Device Name          : GMW95R
Copyright            : Copyright Vaisala Oyj 2013
SW Name              : XM90
SW Model             : XM9x
SW version           : 1.1.28.5849
Serial number        : H2930002
Address              : 0

SUB FUNCTIONS

* Serial Port (COM1) *
Mode                 : STOP

* Error Manager (ERR) *
Status               : NORMAL
Active errors        : 0

* MCI communication (MCI) *
Status               : NORMAL

* Measurement module (HTM10) *
Status               : NORMAL
Factory date         : 20130720

* Measurement module (GM10) *
Status               : NORMAL
Calibration          : 20130819

* BACnet module (BACNET) *
BACnet protocol      : active
MAC                  : 0 (00h)
Device Instance      : 6 (00000006h)
Name                 : GMW95R_ H2930002
Location             : Location
Description          : Description
MAX_MASTER           : 127 (7Fh)
Node type            : Master
Baud setting         : Auto

* MODBUS module (MODBUS) *
MODBUS protocol      : inactive
```


AKRIBIS · www.akribis.info · contacto@akribis.info

Show Measured Parameters

Use the **CALCS** command to list the measurement parameters that are supported by the GMW90 series transmitters. CO_2, RH and T are measured directly by the transmitter, the rest are calculated based on the measured values.

CALCS<cr>

Example:

```
>calcs
RH        - Relative Humidity
T         - Temperature
Tdf       - Dew/Frost point temperature
Td        - Dew point temperature
Tw        - Wetbulb temperature
h         - Enthalpy
x         - Mixing ratio
a         - Absolute humidity
dTd       - Dew/frostpoint depression
CO2       - Filtered CO2
```

NOTE	**CALCS** command also lists all humidity parameters, even if your transmitter model does not measure humidity.

Show Command Help

To see a short description of an individual command, issue the command with a question mark as a parameter.

Example:

```
>calcs ?
Display measured quantities
```


AKRIBIS · www.akribis.info · contacto@akribis.info

Show Command List

Use the **HELP** command to list the currently available serial commands. If the **PASS** command has not been used, only the basic serial commands are available.

HELP<cr>

Example (basic serial commands from a transmitter model with analog outputs, advanced commands are not enabled):

```
>help
?
CALCS
ECHO
ENV
ERRT
ERRS
FORM
HELP
INTV
PASS
R
RESET
SDELAY
SEND
SNUM
STATUS
UNIT
VERS
```

Measurement Settings

Set Environmental Parameters

Use the **ENV** command to set environmental parameters that affect the measurement. For GMW90 series transmitters you can set the ambient pressure value that is used for pressure compensation of CO_2 measurement and calculated humidity parameters.

ENV [*pressure*]<cr>

where

pressure = Ambient pressure in hPa.

Example:

```
>env 1013.3
Pressure (hPa)      : 1013.3
```


AKRIBIS · www.akribis.info · contacto@akribis.info

Select Units

Use the **UNIT** command to select metric or non-metric output units. Only affects data shown on the display and service port, has no effect on the analog and digital outputs. This command is not available on the digital output models (for example, GMW95).

UNIT [*x*]<cr>

Where

x = Selects the unit type to output:
m = metric units, for example, Celsius
n = non-metric units, for example, Fahrenheit

Example:

```
>unit m
Unit                : Metric
```

Analog Output Settings

NOTE	If you want to change analog output settings, you must set the transmitter's configuration DIP switch 8 to position **Custom**. If the switch is set to **DIP**, the settings are view-only.

NOTE	Commands for configuring analog outputs are not available on digital output models (for example, GMW95).

Set Analog Output Mode

Use the **AMODE** command to set the analog output mode and error level. Note that you cannot change between analog output types, for example, from voltage to current output.

AMODE [*channel lo_value hi_value error_value*]<cr>

where

channel = Analog output channel, 1 ... 3.
lo_value = Low limit of the channel.
hi_value = High limit of the channel.
error_value = Error value of the channel.

AKRIBIS · www.akribis.info · contacto@akribis.info

Example (show current configuration):

```
>pass 9000
>amode
Aout 1 range (mA)   : 4.00 ... 20.00 (error: 3.60)
Aout 2 range (mA)   : 4.00 ... 20.00 (error: 3.60)
Aout 3 range (mA)   : 4.00 ... 20.00 (error: 3.60)
```

Example (set channel 1 to 0 ... 20 mA output, with error level at 21 mA):

```
>amode 1 0 20 21
Aout 1 range (mA)   : 0.00 ... 20.00 (error: 21.00)
>
```

Set Analog Output Scaling

Use the **ASEL** command to select the output parameter and scaling for analog output channels.

ASEL [*channel parameter lo_value hi_value*]<cr>

where

channel = Analog output channel, 1 ... 3.

parameter = Parameter that is output on the channel. Available parameters are:

CO2	carbon dioxide
RH	relative humidity
T	temperature
Tdf	dew/frostpoint temperature
Td	dewpoint temperature
Tw	wetbulb temperature
h	enthalpy
x	mixing ratio
a	absolute humidity
dTd	dew/frostpoint depression

lo_value = Low limit of the scaling, in the units of the selected parameter.

hi_value = High limit of the scaling in the units of the selected parameter.

Example (set channel 1 to output dewpoint, in the range -10 ... 20 °C):

```
>pass 9000
>asel 1 TD -10 20
Aout 1 quantity     : Td (-10.00 ... 20.00 'C)
```


AKRIBIS · www.akribis.info · contacto@akribis.info

Set Output Clipping and Error Limit

Use the **AOVER** command to define the behavior of the analog outputs when the measured value is outside the scaled output range.

AOVER [*channel clip% valid%*]<cr>

where

channel = Analog output channel, 1 ... 3.
clip% = Output margin (%) at which the output is clipped. Range 0 ... 20, default is 0.
valid% = Output margin (%) at which the output of the channel goes into the error state. Range 0 ... 20. Default is 5 for humidity and temperature, 0 for carbon dioxide.

The error state is defined using the **AMODE** command, see section Set Analog Output Mode on page 43.

NOTE These settings have no effect on the measurements shown on the display. The display will always show the currently measured values, even outside the scaled output range, as long as the measurement is still functioning.

For example, first check the analog output settings using **ASEL**, **AMODE**, and **AOVER** commands:

```
>pass 9000
>asel
Aout 1 quantity     : T (-5.00 ... 55.00 'C)
Aout 2 quantity     : RH (0.00 ... 100.00 %)
Aout 3 quantity     : CO2 (0.00 ... 2000.00 ppm)

>amode
Aout 1 range ( V)   : 0.00 ... 5.00 (error: 5.50)
Aout 2 range ( V)   : 0.00 ... 5.00 (error: 5.50)
Aout 3 range ( V)   : 0.00 ... 5.00 (error: 5.50)

>aover
Aout 1 clipping      : 0.00 %
Aout 1 error limit   : 5.00 %
Aout 2 clipping      : 0.00 %
Aout 2 error limit   : 5.00 %
Aout 3 clipping      : 0.00 %
Aout 3 error limit   : 0.00 %
```

The parameter for channel 3 is CO2, with standard output range 0 ... 5 V and scaling 0 ... 2000 ppm. Error state is 5.5 V, which is set immediately when the measured value is outside the scaled output range.

AKRIBIS · www.akribis.info · contacto@akribis.info

Now give the following **AOVER** command:

```
>aover 3 5 10
Aout 3 clipping      : 5.00 %
Aout 3 error limit   : 10.00 %
```

Channel 3 now behaves like this:

- Clipping is now set to 5%, meaning the output is allowed to vary between 0 ... 5.25 V. The channel will output the measurement for 0 ... 2100 ppm, but range 0 ... 5 V remains scaled to 0 ... 2000 ppm.
- Error limit is 10%, which means channel 3 will show the error state (5.5 V) when the measured value is 10% outside the scaled output range. With the settings above, this will happen if the measured temperature is outside range 0 ... 2100 ppm.
- The output will never actually be between 5.25 and 5.5 V because of clipping.

AKRIBIS · www.akribis.info · contacto@akribis.info

Display Settings

Select Parameters to Display

Use the **DSEL** command to select the parameters that are displayed on the transmitter screen. You can select parameters by abbreviation. If only one parameter is selected, it is shown vertically centered on the transmitter screen.

DSEL [*Q1 Q2 Q3*]<cr>

where

Q1 = First parameter to show on the screen. Available parameters are:

out1	same parameter as analog output channel 1
out2	same parameter as analog output channel 2
out3	same parameter as analog output channel 3
CO2	carbon dioxide level
CO2_10	carbon dioxide level in 10 ppm steps
RH	relative humidity
T	temperature
Tdf	dew/frostpoint temperature
Td	dewpoint temperature
Tw	wetbulb temperature
h	enthalpy
x	mixing ratio
a	absolute humidity
dTd	dew/frostpoint depression

Q2 = Second parameter to show on the screen. Available parameters are the same as for Q1.

Q3 = Third parameter to show on the screen. Available parameters are the same as for Q1.

Example (show currently displayed parameters):

```
>pass 9000
>dsel
Quant 1              : RH
Quant 2              : T
Quant 3              : CO2
```

Example (change display to only show CO2):

```
>dsel CO2
OK
```


AKRIBIS · www.akribis.info · contacto@akribis.info

Serial Line Output Commands

Start Measurement Output

Use the **R** command to start the continuous outputting of measurement values as an ASCII text string to the serial line. The format of the measurement message is set with the **FORM** command.

R<cr>

Example (measurement message in default format):

```
>r
RH = 26.44 %RH T = 24.27 'C CO2 = 449 ppm
RH = 26.45 %RH T = 24.27 'C CO2 = 449 ppm
RH = 26.43 %RH T = 24.27 'C CO2 = 449 ppm
RH = 26.43 %RH T = 24.27 'C CO2 = 449 ppm
...
```

Outputting the results continues in intervals issued with the command **INTV**. You can stop the output with the **S** command. Since the interface is half-duplex, you must enter the commands when the transmitter is not outputting.

Stop Measurement Output

You can stop the measurement output with the **S** command:

S<cr>

Output a Reading Once

Use the **SEND** command to output a single measurement message.

SEND<cr>

Example:

```
>send
RH = 26.44 %RH T = 24.27 'C CO2 = 449 ppm
```


AKRIBIS · www.akribis.info · contacto@akribis.info

Set Output Interval

Use the **INTV** command to change the output interval of the automatically repeating measurement messages. The measurement messages are repeated in the RUN mode, or after the **R** command has been given.

INTV [*n xxx*]<cr>

where

n = time interval, range 0 ... 9999.
xxx = time unit = "S", "MIN", or "H"

The shortest output interval (with n = 0) outputs the measurement messages as quickly as the transmitter produces them, without additional delay.

Example:

```
>intv 1 min
Output interval     : 1 min
```


AKRIBIS · www.akribis.info · contacto@akribis.info

Set Output Format

Use the serial line command **FORM** to change the measurement message sent by the transmitter on the service port. You can freely define the output message to include the desired parameters, formatting options, text strings, and additional fields.

FORM [*modifier string*]<cr>

where

modifier string = String of parameters and modifiers that defines the output format, length 1 ... 150 characters. Maximum length may be shorter when text strings are used. See Table 9 and Table 10 on page 51, and examples below.

Command to set default format:

>**form /**

Example of default output (default depends on transmitter model):

```
RH = 26.44 %RH T = 24.27 'C CO2 = 449 ppm
RH = 26.45 %RH T = 24.27 'C CO2 = 449 ppm
RH = 26.43 %RH T = 24.27 'C CO2 = 449 ppm
RH = 26.43 %RH T = 24.27 'C CO2 = 449 ppm
...
```

Command to set output format as CO_2 and T with Modulus-256 checksum:

>**form "CO2 =" U4 4.0 CO2 " T =" U3 3.2 t CS2 \r \n**

Output example:

```
CO2 = 479 ppm  T = 24.26 'C E9
CO2 = 477 ppm  T = 24.27 'C E8
CO2 = 475 ppm  T = 24.27 'C E6
CO2 = 475 ppm  T = 24.27 'C E6
...
```

Command to set output format as CO_2 and T, with **start of text** (ASCII character 002) and **end of text** (003) ASCII codes, and without line feed and carriage return at the end:

>**form #002 "CO2 =" U4 4.0 CO2 " T =" U3 3.2 t #003**

Output example (ASCII codes not visible here):

```
CO2 = 817 ppm  T = 24.26 'CCO2 = 806 ppm  T = 24.27 'CCO2 =
800 ppm  T = 24.27 'CCO2 = 788 ppm  T = 24.27 'CO2 = 781
ppm  T = 24.27 'CCO2 = 768 ppm  T = 24.27 'C...
```


AKRIBIS · www.akribis.info · contacto@akribis.info

Table 9 FORM Command Parameters

Measured Parameter	Abbreviation in FORM Command
Carbon dioxide	CO2
Relative humidity	RH
Temperature	T
Dew/frostpoint temperature	Tdf
Dewpoint temperature	Td
Wetbulb temperature	Tw
Enthalpy	h
Mixing ratio	x
Absolute humidity	a
Dew/frostpoint depression	dTd

Table 10 FORM Command Modifiers

Modifier	Description
x.y	Length modifier (number of digits and decimal places)
#t	Tabulator
#r	Carriage-return
#n	Line feed
""	String constant, length 1 ... 15 characters
#xxx	ASCII code value (decimal) of a special character; for example, **#027** for ESC
Ux	Shows the name of the measurement unit using “x” number of characters. For example, **U3** shows the name of the measurement unit with three characters
CS2	Modulus-256 checksum of message sent so far, ASCII encoded hexadecimal notation
CS4	Modulus-65536 checksum of message sent so far, ASCII encoded hexadecimal notation
CSX	NMEA xor-checksum of message sent so far, ASCII encoded hexadecimal notation

NOTE When entering modifiers, you can also use the backslash character “\” instead of the hash “#”.

AKRIBIS · www.akribis.info · contacto@akribis.info

Serial Line Settings

Set Remote Echo

Use the **ECHO** command to enable or disable remote echo by the transmitter.

ECHO [*on/off*]<cr>

Example:

```
>echo on
Echo                : ON
```

Set Serial Line Turnaround Delay

With the **SDELAY** command you can set the turnaround delay of the transmitter (time waited before replying to an incoming message) or view the currently set delay value.

SDELAY [*delay*]<cr>

where

delay = Turnaround delay in milliseconds, range 1 … 1000.

Example:

```
>sdelay 5
COM1 transmit delay : 5
```


AKRIBIS · www.akribis.info · contacto@akribis.info

Calibration and Adjustment Commands

The following sections describe the calibration and adjustment commands of the GMW90 series. For general information on performing calibration and adjustment on the serial line, see section Adjustment Using a Computer on page 69.

NOTE	You must enable advanced serial commands using the **PASS 9000** command before using the calibration and adjustment commands.

Adjust CO_2 Measurement

Use the **CCO2** command to adjust the carbon dioxide (CO_2) measurement. You can do a 1-point or a 2-point adjustment, or clear the adjustment information from the GM10 module. Note that the factory adjustment will remain intact when user adjustment is cleared.

Remember to let the transmitter stabilize in the reference concentration before entering the adjustment command. Three minutes is typically enough.

NOTE	Before using the **CCO2** command, read section Notes for CO2 Adjustment on page 64.

Show Current CO_2 Adjustment

In addition to the user-adjustable offset and gain values, the **CCO2** command displays diagnostic information that may be useful to Vaisala Helpdesk if there is a problem with the adjustment.

CCO2<cr>

Example:

```
>pass 9000
>cco2
User gain           : 1.000
User offset         : -8.365
CO2 (pre-adjust)    : 464.625
30s delta           : 13.904
30s stddev          : 4.429
Adjustability       : CAN_ADJUST
```


AKRIBIS · www.akribis.info · contacto@akribis.info

1-point Adjustment of CO_2 Measurement

The 1-point adjustment adjusts either offset or gain, depending on the CO_2 concentration.

CCO2 [*ONE*] [*x*]<cr>

where

x = The reference CO_2 concentration (ppm) that the transmitter should be showing.

Example:

```
>pass 9000
>cco2 one 440
OK
```

2-point Adjustment of CO_2 Measurement

The 2-point adjustment adjusts both offset and gain.

CCO2 [*LO* | *HI*] [*x*]<cr>

where

LO = Adjustment point at low concentration (< 700 ppm).

HI = Adjustment point at high concentration (> 700 ppm).

x = The reference CO_2 concentration (ppm) that the transmitter should be showing.

The 2-point correction is not applied immediately – you must use the **CCO2 SAVE** command to store your adjustment to the GM10 module. If you have entered user adjustments using the **CCO2** command but do not wish to commit them, use the **CCO2 CANCEL** command.

CCO2 [*SAVE* | *CANCEL*]<cr>

Example (two point adjustment, low concentration 0 ppm and high concentration 1000 ppm):

```
>pass 9000
>cco2 lo 0
OK
>cco2 hi 1000
OK
>cco2 save
OK
```


AKRIBIS · www.akribis.info · contacto@akribis.info

Clear User Adjustment of CO_2 Measurement

CCO2 [*RESET*]<cr>

Example:

```
>pass 9000
>cco2 reset
OK
```

Adjust Humidity Measurement

Use the **CRH** command to perform a humidity adjustment of the relative humidity (RH) measurement. You can do a 1-point or a 2-point adjustment, or clear the adjustment information from the HTM10 module. Note that the factory adjustment will remain intact when user adjustment is cleared.

NOTE	Before using the **CRH** command, read section Notes for RH Adjustment on page 66.

Show Current RH Adjustment

CRH<cr>

Example (showing default offset and gain):

```
>pass 9000
>crh
RH Gain              : 1.000
RH Offset            : 0.000
```


AKRIBIS · www.akribis.info · contacto@akribis.info

1-point Adjustment of RH Measurement

The 1-point adjustment adjusts both offset and gain depending on the adjustment condition. The same type of adjustment is done when turning the RH trimmer.

Place the transmitter in the reference condition and allow it to stabilize before entering the adjustment.

CRH [*ONE*] [*x*]<cr>

where

x = The reference humidity condition (%RH) that the transmitter should be showing.

Example:

```
>pass 9000
>crh one 11
OK
```

2-point Adjustment of RH Measurement

CRH [*LO* | *HI*] [*x*]<cr>

where

LO = Adjustment point at the dry end (low RH).

HI = Adjustment point at the wet end (high RH). The difference between the two points should be at least 30 %RH.

x = The reference humidity condition (%RH) that the transmitter should be showing.

The 2-point correction is not applied immediately – you must use the **CRH SAVE** command to store your adjustment to the HTM10 module. If you have entered user adjustments using the CRH command but do not wish to commit them, use the **CRH CANCEL** command.

CRH [*SAVE* | *CANCEL*]<cr>

Example (two point adjustment, low point 11 %RH and high point 75 %RH):

```
>pass 9000
>crh lo 11
OK
>crh hi 75
OK
>crh save
OK
```


AKRIBIS · www.akribis.info · contacto@akribis.info

Clear User Adjustment of RH Measurement

CRH [*RESET*]<cr>

Example:

```
>pass 9000
>crh reset
OK
```

Adjust Temperature Measurement

Use the **CT** command to perform an adjustment of the temperature measurement. You can do a 1-point adjustment or clear the adjustment information from the HTM10 module. Note that the factory adjustment will remain intact when user adjustment is cleared.

Show Current T Adjustment

CT<cr>

Example (showing default temperature offset):

```
>pass 9000
>ct
Temperature offset  : 0.000
```

1-point Adjustment of T Measurement

Place the transmitter in the reference condition and allow it to stabilize before entering the adjustment.

CT [*x*]<cr>

where

x = The reference temperature (in degrees Celsius) that the transmitter should be showing.

Example:

```
>pass 9000
>ct 23
OK
```


AKRIBIS · www.akribis.info · contacto@akribis.info

Clear User Adjustment of T Measurement

CT [*RESET*]<cr>

Example:

```
>pass 9000
>ct reset
OK
```

Enter Calibration and Adjustment Information

Use the **CTEXT** command to store a text string that describes the calibration and/or adjustment. To enter a text string with spaces, enclose the string in quotation marks. Use the **CDATE** to store the date.

CTEXT [*text*]<cr>

CDATE [*YYYY-MM-DD*]<cr>

Examples:

```
>pass 9000
>ctext "adjusted rhlab/Tech021"
"adjusted rhlab/Tech021"

>cdate 2011-12-08
Calibration date    : 2011-12-08
```


AKRIBIS · www.akribis.info · contacto@akribis.info

Testing Commands

Test Analog Outputs

Use the **ATEST** command to force the analog outputs to the given value. Before using the **ATEST** command it is useful to give the **AMODE** command to verify the output mode of the channels.

ATEST [*channel value*]<cr>

where

channel = Number of analog output channel to be tested (1 ... 3).
value = Voltage or current value to set the channel to. Unit is determined according to output type (V or mA).

The value you set may not be achievable by the transmitter. Voltage output can go as high as 12 V, and current output can go up to 25 mA. Also, current output cannot go down to zero.

After testing the output, give the **ATEST** command with the channel number to exit the test mode.

Example (verify output mode of the channels):

```
>pass 9000
>amode
Aout 1 range ( V)   : 0.00 ... 5.00 (error: 5.50)
Aout 2 range ( V)   : 0.00 ... 5.00 (error: 5.50)
Aout 3 range ( V)   : 0.00 ... 5.00 (error: 5.50)
```

Example (set channel 1 to 6 V):

```
>atest 1 6
Aout1 ( V)          : 6.000
```

Example (end test mode for channel 1, resume normal output):

```
>atest 1
Aout1 test mode disabled.
```


AKRIBIS · www.akribis.info · contacto@akribis.info

Other Commands

Enable Advanced Serial Commands

Use the **PASS** command to enable the advanced serial commands.

PASS [*passcode*]<cr>

where

passcode = Passcode to enable advanced commands is **9000**.

Example:

```
>pass 9000
```

Reset Transmitter

Use the **RESET** command to reset the transmitter.

RESET<cr>

Example:

```
>reset
Resetting
GMW95R / 1.1.28.5849 / XM90
>
```


AKRIBIS · www.akribis.info · contacto@akribis.info

Set BACnet Parameters

Use the **BACNET** command to show or set some of the transmitter's BACnet parameters. You can also use the **BACNET** command to reinitialize the BACnet stack of the transmitter without having to reset or power cycle the transmitter.

BACNET [*parameter_name* [*parameter_value*]] [*reinit*]<cr>

where

parameter_name = Name of the BACnet parameter to change. Available parameters are:

Instance: BACnet instance number. Unsigned value in range 0 ... 4194302.

Name: BACnet Object_Name shown in the Device object. String value, no spaces.

Description: BACnet Description shown in the Device object. String value, no spaces.

Location: BACnet Location shown in the Device object. String value, no spaces.

Password: Password used in ReinitializeDevice service. String value, no spaces.

MAX_MASTER: Max_Master parameter in Device object. Unsigned value, range 1 ... 127.

parameter_value = New value of the parameter. See descriptions above for allowed values.

reinit = Reinitializes the BACnet stack. Must be given as the only argument for the **BACNET** command.

Example (show BACnet parameters):

```
>pass 9000
>bacnet
Instance            : 6 (00000006h)
Name                : GMW95R_ H2930002
Location            : Location
Description         : Description
Password            : 1234
MAX_MASTER          : 127 (007Fh)
COV_Interval        : 0
Autobaud_Interval   : 10
```


AKRIBIS · www.akribis.info · contacto@akribis.info

Example (change Description to **main_hall**, and reinitialize the BACnet stack):

```
>pass 9000
>bacnet description main_hall
Description         : main_hall
>bacnet reinit
Reinitialize signaled to BACnet stack.
```

Set CO_2 Indicator LED Parameters

On transmitter models with indicator LEDs, you can use the **TRAF** command to show or set CO_2 indicator LED limits. You can also turn the LEDs off.

TRAF [*step1 step2 step3*]<cr>
TRAF [*quant*]<cr>

where

step1	=	The yellow LED is lit above this ppm limit (default 800).
step2	=	The red LED is lit above this ppm limit (default 1200).
step3	=	The red LED starts blinking above this ppm limit (default 5000).
quant	=	Quantity that controls the LEDs. Options are:

CO2 – LEDs controlled by CO_2 level (default).
NONE – LEDs disabled.

Example (set indicator LED limits to 900, 1500 and 5000 ppm):

```
>traf 900 1500 5000
Traffic quantity    : CO2
Traffic step 1      : 900.00 ppm
Traffic step 2      : 1500.00 ppm
Traffic step 3      : 5000.00 ppm
Traffic threshold   : 20.00 ppm
>
```

Example (disable indicator LEDs):

```
>traf none
Traffic quantity    : Disabled
Traffic step 1      : 800.00 ppm
Traffic step 2      : 1200.00 ppm
Traffic step 3      : 5000.00 ppm
Traffic threshold   : 20.00 ppm
>
```


AKRIBIS · www.akribis.info · contacto@akribis.info

CHAPTER 5
MAINTENANCE

This chapter provides information that is needed in basic maintenance of the GMW90 series.

Cleaning

The body of the transmitter can be cleaned by wiping with a moistened lint-free cloth. Do not use cleaning agents or solvents, or blow pressurized air into the transmitter housing.

Do not attempt to clean contaminated measurement modules. Dirty modules should always be replaced with new calibrated modules.

Calibration and Adjustment

GMW90 series transmitters are fully calibrated as shipped from factory. GMW90 series transmitters have a display that makes it easy to compare the measured readings against any portable calibration reference. Note that depending on the ordered configuration, the display may be hidden under the sliding cover.

Adjustment Methods

You can adjust the measurements in the following ways:

- 1-point adjustment using the trimmers under the sliding cover. See section Adjustment Using Display and Trimmers on page 67.
- 1-point or 2-point adjustment using the service port. See the following sections:
  - Adjustment Using a Hand-Held Meter on page 68.
  - Adjustment Using a Computer on page 69.

If adjustment is not enough to restore the measurement accuracy of the transmitter, you can also replace the measurement modules. See section Repair Maintenance on page 70.

AKRIBIS · www.akribis.info · contacto@akribis.info

Notes for CO_2 Adjustment

1-point CO_2 adjustment affects either offset or gain, depending on the gas concentration. 1-point adjustment below 700 ppm affects the measurement offset, above 700 ppm it affects the gain.

2-point adjustment will adjust both offset and gain. Choose the adjustment points as follows:

- For first point, use as low concentration as possible. Preferably 0 ppm, must be below 700 ppm.
- For second point, use as high concentration as is relevant for your application. Must be within 700 ... 5000 ppm.

Using Calibration Gas vs. Ambient Gas

You can adjust using a calibration gas with a known concentration (recommended), or adjust using the ambient gas:

- When using a calibration gas, feed the gas to the adjustment inlet at a flow rate of 0.3 ... 0.7 L/min. For location of the inlet, see Figure 2 on page 15. After connecting the gas supply to the field adjustment inlet, wait for at least three minutes for the reading to stabilize.
- When using ambient gas for adjustment, avoid breathing near the transmitter during the adjustment.

Regardless of the CO_2 reference used, it is important to let the CO_2 measurement stabilize before performing the adjustment. Three minutes is typically enough. Also allow for the stabilization period after adjustment, before verifying the result.

Effect of Temperature on CO_2 Measurement

The device is fully temperature compensated using internal temperature measurement.

AKRIBIS · www.akribis.info · contacto@akribis.info

Effect of Pressure on CO_2 Measurement

Ambient pressure affects the CO_2 reading of GMW90. If the ambient pressure differs from the normal pressure 1013 hPa, the transmitter can correct the reading if you enter the correct pressure value to the transmitter using an MI70 indicator, computer (**ENV** command), or using Modbus protocol.

If you want to apply the pressure compensation in the building control system instead, multiply the measured CO_2 value using the appropriate compensation multiplier from Table 11.

Table 11 Effect of Elevation on CO_2 Measurement

Elevation (m)	Elevation (ft)	Pressure (hPa)	Compensation Multiplier
0	0	1013	1
100	328	1001	1.017
200	656	989	1.034
300	984	978	1.051
400	1312	966	1.067
500	1640	955	1.084
600	1969	943	1.100
700	2297	932	1.116
800	2625	921	1.132
900	2953	910	1.148
1000	3281	899	1.164
1100	3609	888	1.179
1200	3937	877	1.195
1300	4265	867	1.210
1400	4593	856	1.225
1500	4921	846	1.240
1600	5249	835	1.255
1700	5577	825	1.269
1800	5906	815	1.284
1900	6234	805	1.298
2000	6562	795	1.312
2100	6890	785	1.326
2200	7218	775	1.340
2300	7546	766	1.354
2400	7874	756	1.368

AKRIBIS · www.akribis.info · contacto@akribis.info

When adjusting the transmitter, you can also correct your reference concentration (for example, the value on the gas cylinder label) according to the graph below.

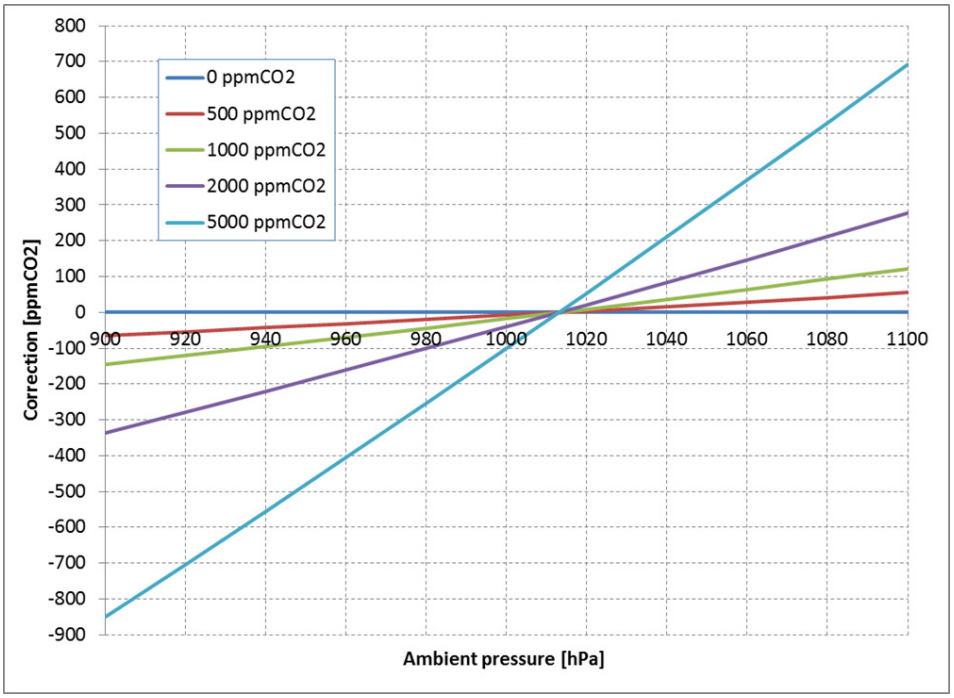

1402-025

Figure 25 Effect of Pressure on CO_2 Reading

Notes for T Adjustment

Temperature adjustment is always a simple 1-point offset correction.

Notes for RH Adjustment

1-point humidity adjustment affects both offset and gain, depending on the adjustment condition. In a dry condition (for example, 11 %RH), offset is adjusted more than gain.

The 1-point humidity adjustment requires that the target condition is at least 50% of the currently measured value. This prevents the user from making excessive corrections that are very unlikely to be needed.

AKRIBIS · www.akribis.info · contacto@akribis.info

Adjustment Using Display and Trimmers

CAUTION	The trimmers only turn 135 degrees each way, less than half a rotation. Do not force the trimmer past the stopping point. If you wish to apply a greater correction than allowed by the trimmer in a single adjustment, simply adjust the transmitter again. Corrections applied using the trimmers are cumulative.

NOTE	User calibration settings (adjustment by trimmers or service port) are stored in the measurement modules. If you replace a module, there is no need to undo previous adjustments.

1. To enter the adjustment screen, open the slide and rotate the CO_2, T, or RH trimmer slightly during normal measurement. If the trimmer is not centered, you see the trimmer centering screen first. Simply turn the trimmer to the center and wait for the progress bar to complete.

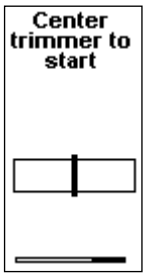

1111-075

Figure 26 Trimmer Centering Screen

2. In the adjustment screen, turn the trimmer to set the desired correction. To commit the change, stop turning the trimmer and wait.

1310-092

Figure 27 Adjustment Screen

3. If you have adjusted the CO_2 measurement, wait for three minutes for the reading to stabilize.
4. Verify the adjusted measurement from measurement screen.

AKRIBIS · www.akribis.info · contacto@akribis.info

Adjustment Using a Hand-Held Meter

GMW90 transmitters can be adjusted using Vaisala hand-held meters HM70 (for humidity and temperature) and GM70 (for carbon dioxide and temperature).

1. Connect the GMW90 series transmitter to the MI70 indicator using the connection cable (Vaisala order code 219980). MI70 indicator is the hand-held display device that is included with HM70 and GM70.
2. Depending on the connected devices, you may be prompted to check the currently applied environment settings. Check the settings when prompted.
3. In the **Functions** menu of the MI70 indicator, select **Calibrate XMW9x** and press **Start**.
4. Confirm **Yes**. Confirm the automatic power off notification with **Ok**.
5. Select parameter for adjustment: CO_2, RH, or T.
6. Screen shows the measured values and their difference. Press **Adjust** to select the Adjustment mode.
7. Select the desired adjustment type using arrow buttons and press **Select**:
   - **To same as reference**: Adjusts the measurement of the GMW90 transmitter to the same reading as the reference that is connected to the other port of the MI70 indicator. This option is not available if no reference for the selected parameter is connected to the MI70 indicator.
   - **1-point adjustment**: Adjusts the measurement of the GMW90 to a reference value that you specify. Follow the instructions from the MI70 indicator when using this option.
   - **2-point adjustment**: Adjusts the measurement of the GMW90 at two points to reference values that you specify. This option is not available when adjusting temperature (T).
   - **Revert factory calib.**: This option removes the currently applied user adjustment from the measurement module (GM10 module for CO_2, HTM10 module for RH or T). Only the adjustment for the selected parameter is removed.
8. Complete the selected adjustment by following the instructions from the MI70 indicator.

AKRIBIS · www.akribis.info · contacto@akribis.info

Adjustment Using a Computer

For more detailed instructions on using the Vaisala USB cable and a terminal application, see section Connecting With a Computer on page 34.

For a description of the serial commands, see section Calibration and Adjustment Commands on page 53.

1. Connect the GMW90 series transmitter to your computer using the Vaisala USB cable (order code 219690).
2. Start a terminal application and open a new session to the service port of the transmitter. The serial line settings are 19200, N, 8, 1.
3. Before changing the adjustment, issue the following commands to see the transmitter's current adjustment information:

   ```
   pass 9000
   cco2
   ct
   crh
   ctext
   cdate
   ```

   Note that the **CRH** command is not available if your transmitter does not support humidity measurement.

4. Place the entire transmitter in the desired reference condition and allow the measurement to stabilize. Follow the stabilization from the serial line (output from the **R** command) or the display.
5. You can now use the **CCO2**, **CT**, and **CRH** commands to adjust the transmitter's measurement. Refer to the command descriptions for the available options.
6. After performing the adjustment, verify from the serial line or the display that the measurement has been corrected.
7. After completing the adjustments, you can enter a descriptive text string in the transmitter's memory using the **CTEXT** command, and note the adjustment date using the **CDATE** command.

AKRIBIS · www.akribis.info · contacto@akribis.info

Repair Maintenance

If you cannot restore the measurement accuracy of the transmitter by calibration and adjustment, you can replace the measurement modules inside the transmitter. Measurement modules are the small component boards that are connected to the main transmitter component board. See Figure 4 on page 17.

NOTE	User calibration settings (adjustment by trimmers or service port) are stored in the module. If you replace the module, you do not need to undo the previously applied correction.

Replacing the GM10 Module

To replace the module:

1. Disconnect the transmitter body from the mounting base.
2. Locate the GM10 module on the transmitter. The module is a separate component board with a golden cuvette that contains the CARBOCAP® sensor. The module is connected to the main transmitter board with a connector, and held in place by a plastic clip on the other side. See Figure 4 on page 17.
3. Disconnect the module by carefully lifting the module from the connector side. See Figure 28 below.

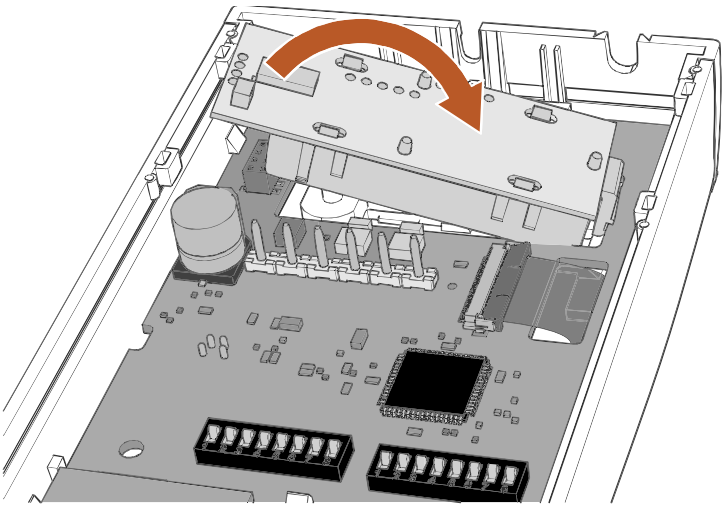

1311-137

Figure 28 Disconnecting the GM10 Module

AKRIBIS · www.akribis.info · contacto@akribis.info

4. A short piece of foam pipe is included with the GM10 spare part. Place it on top of the calibration gas inlet inside the transmitter, as shown in the figure below. If the foam pipe is already in place and appears undamaged, you do not have to replace it.

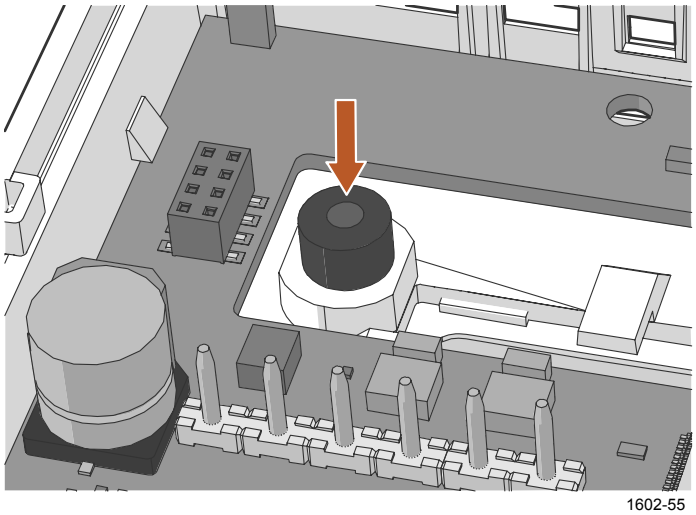

Figure 29 Foam Pipe Inside GMW90

5. Take the new GM10 module and place it in the hole for the module so that the plastic clip meets the component board. Then lower the connector end of the module.
6. Push down on the module to secure the connector.
7. Reconnect the transmitter to the mounting base.
8. Verify that there are no errors when the transmitter starts up. If there are, see section Error Messages on page 74.

AKRIBIS · www.akribis.info · contacto@akribis.info

Replacing the HTM10 Module

CAUTION	Handle the HTM10 module carefully. When reinstalling the transmitter body to the mounting base, avoid touching the module or the HUMICAP® sensor.

To replace the module:

1. Disconnect the transmitter body from the mounting base.
2. With your fingers, push apart the two plastic holders that hold the module. Pull out the module. Keep the module straight while pulling it out, otherwise the pins may twist in the connector and damage it.

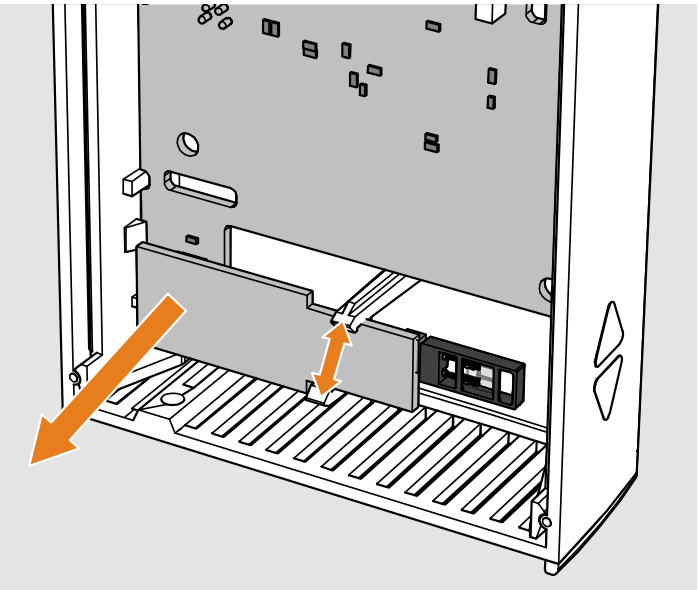

1112-028

Figure 30 Replacing the HTM10 Module

3. Take the new module and align the pins to the connector on the transmitter's component board.
4. Push down on the module so that the plastic holders clip into place. Try not to tilt the module, so that the pins will meet the connector straight on.
5. Reconnect the transmitter to the mounting base.
6. Verify that there are no errors when the transmitter starts up. If there are, see section Error Messages on page 74.

AKRIBIS · www.akribis.info · contacto@akribis.info

CHAPTER 6
TROUBLESHOOTING

This chapter describes possible problems, their probable causes and remedies, and provides contact information for technical support.

Problem Situations

Table 12 Troubleshooting Table

Problem	Possible Cause	Remedy
Transmitter reports an error on the display or serial line.	Multiple causes.	Refer to Table 13 on page 74.
Temperature reading shown by the transmitter is too high.	Transmitter is installed in an unsuitable location, for example, near a heat source or in sunlight.	Relocate transmitter. See section Selecting Location on page 24.
	Transmitter installed in improper orientation.	Reinstall transmitter with the arrow on the mounting base pointing up.
Transmitter does not recognize a valid serial command, responds with message `FAIL 1: Unknown command`	Advanced commands not enabled.	Issue the **PASS 9000** command.
	Remote echo enabled on the transmitter, causing collisions on the RS-485 line.	Issue the **ECHO OFF** command to disable remote echo.
	Intermittent connection problem between the transmitter and your terminal.	Issue the command again.
Cannot see what you are typing on the serial line.	Serial line echo not enabled.	Enable local echo on your terminal. See section Terminal Application Settings on page 35.
Unable to complete CO_2 adjustment successfully.	Incorrect reference gas flow.	Retry calibration after reading section Calibration and Adjustment on page 63.
	Breathing on transmitter while using ambient gas as reference.	
	Measurement not stabilized before attempting adjustment.	
	Incorrect calibration gas concentration(s) used for 2-point calibration.	

AKRIBIS · www.akribis.info · contacto@akribis.info

Error Messages

Table 13 Error Messages

Error Text on Display	Error ID on Serial Line	Possible Cause	Remedy
HTM10 01	23	Communication problem with HTM10 module.	Check that the HTM10 module sits firmly in place. Remove and reconnect.
HTM10 04	21	Problem with humidity measurement.	- Check for missing or damaged HUMICAP® sensor on the HTM10 module. - Check for condensation on the HUMICAP® sensor. Wait for the sensor to dry out.
HTM10 03	4	Internal problem with HTM10 module.	- Restart the transmitter. - Replace the module if unable to remove the problem.
HTM10 05	22		
HTM10 06	42		
GM10 01	79	Communication problem with GM10 module.	Check that the GM10 module sits firmly in place. Remove and reconnect.
GM10 03	81	Internal problem with GM10 module.	- Restart the transmitter. - Replace the module if unable to remove the problem.
GM10 04	82		
GM10 10	28		
GM10 11	88		
GM10 12	89	Dirty or damaged GM10 module.	Replace module.
Internal 1	1	Internal problem with the transmitter.	- Restart the transmitter. - Restore the factory settings using service port or DIP switches if reset does not help.
Internal 2	2		
Internal 3	3		
Internal 4	43		

AKRIBIS · www.akribis.info · contacto@akribis.info

Viewing Error Messages on Serial Line

View Currently Active Errors

Use the **ERRS** command to view currently active errors on the serial line:

ERRS<cr>

Example:

```
>errs
NO ERRORS
```

View Error Table

Use the **ERRT** command to view the table of possible transmitter errors. The table includes error ID, error count since last reset, level, current state, and error text.

Critical errors require a transmitter reset to recover. Other errors may be recoverable if their cause is removed.

ERRT<cr>

Example:

```
>errt
Id:    N:     Level:State: Error text
 1:    0:  CRITICAL:OFF: FLASH memory corrupted
 2:    0:  CRITICAL:OFF: Parameter read (using defaults)
 3:    0:  CRITICAL:OFF: Parameter write
 4:    0:  CRITICAL:OFF: HTM10 03 FLASH Corrupted
21:    0:     ERROR:OFF: HTM10 04 RH measurement
22:    0:     ERROR:OFF: HTM10 05 T measurement
23:    0:     ERROR:OFF: HTM10 01 Continuous communication failure
42:    0:     ERROR:OFF: HTM10 06 Device Descriptor mismatch
43:    0:  CRITICAL:OFF: Factory parameter memory not consistent
79:    0:     ERROR:OFF: GM10 01 Continuous communication failure
81:    0:  CRITICAL:OFF: GM10 03 FLASH Corrupted
82:    0:  CRITICAL:OFF: GM10 04 MEM I
28:    0:     ERROR:OFF: GM10 10 Device Descriptor mismatch
88:    0:     ERROR:OFF: GM10 11 Module uncalibrated
89:    0:     ERROR:OFF: GM10 12 CO2 measurement
```


AKRIBIS · www.akribis.info · contacto@akribis.info

Error State

If there are any active “critical” or “error” level errors active in the transmitter, both analog outputs are set into a defined error level instead of the measured result. The error level depends on the output type:

- For 0 ... 5 V output, the default error level is **5.5 V**
- For 0 ... 10 V output, the default error level is **11 V**
- For 4 ... 20 mA output, the default error level is **3.6 mA**
- For 0 ... 20 mA output, the default error level is **21 mA**

If all “critical” and “error” level errors are turned off (by removing their cause), transmitter resumes normal operation of analog outputs.

You can configure the error level using the **AMODE** command. See section Set Analog Output Mode on page 43.

NOTE	You can also use the **AOVER** command to configure a channel to go to the error level if the measured parameter is sufficiently far out of the measured range. See section Set Output Clipping and Error Limit on page 45.

AKRIBIS · www.akribis.info · contacto@akribis.info

Reverting to Factory Settings

GMW90 series transmitters, including factory-customized transmitters, can be reverted to their original shipping configuration using the DIP switches or the service port.

Reverting the transmitter to factory settings clears all user configuration that has been done using the service port. User-made adjustments are also cleared from the GM10 and HTM10 measurement modules. The factory calibration will remain.

Reverting to Factory Settings Using DIP Switches

1. Disconnect the transmitter cover from the mounting base.
2. Make a note of the DIP switch positions before changing anything, so you can restore the positions later.
3. Analog output models: Set the DIP switches as shown in Figure 31 below: move all switches up.

   Digital output models: Set the DIP switches in the leftmost DIP switch bank as shown in Figure 32 below. Do not move the switches in the other bank.

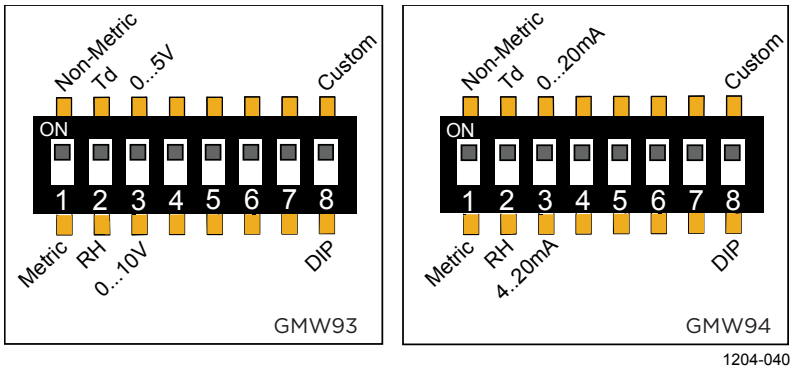

Figure 31 DIP Switch Factory Reset (GMW93/94)

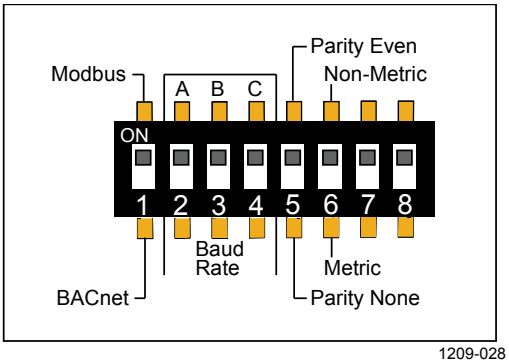

Figure 32 DIP Switch Factory Reset (GMW95)

AKRIBIS · www.akribis.info · contacto@akribis.info

4. Reconnect the transmitter cover to the mounting base so the transmitter powers up. Check the screen after power-up: when the DIP switches are in factory reset position, you will see a notification text.
5. Disconnect the transmitter cover again.
6. Set the DIP switches to the positions they were before. If you are restoring the factory configuration on a factory customized analog output model (GMW90 or GMW90R), leave DIP number 8 to the **Custom** position to avoid the custom configuration from being overwritted by the default settings at transmitter startup. For more information about this, see section Changing Between DIP and Custom Configuration on page 21.
7. Reconnect the transmitter cover to the mounting base. Check the startup screens to verify the configuration.

Reverting to Factory Settings Using Service Port

Use the **FRESTORE** command to restore the transmitter to factory settings.

FRESTORE<cr>

NOTE	If you are restoring the factory configuration on a factory customized analog output model (GMW90 or GMW90R), leave DIP number 8 to the **Custom** position to avoid the custom configuration from being overwritted by the default settings at transmitter reset. For more information about this, see section Changing Between DIP and Custom Configuration on page 21.

NOTE	After using the **FRESTORE** command, reset the transmitter using the **RESET** command.

Example:

```
>pass 9000
>frestore
Restoring HTM10 factory parameters
HTM10 factory parameters restored
Restoring GM10 factory parameters
GM10 factory parameters restored
Restoring GMW95R factory settings
110/110 parameters restored
>reset
Resetting
GMW95R / 1.1.28.5849 / XM90
>
```


AKRIBIS · www.akribis.info · contacto@akribis.info

Technical Support

For technical questions, contact the Vaisala technical support by e-mail at helpdesk@vaisala.com. Provide at least the following supporting information:

- Name and model of the product in question.
- Serial number of the product.
- Name and location of the installation site.
- Name and contact information of a technically competent person who can provide further information on the problem.

For contact information of Vaisala Service Centers, see www.vaisala.com/servicecenters.

AKRIBIS · www.akribis.info · contacto@akribis.info

CHAPTER 7

TECHNICAL DATA

This chapter provides the technical data of the GMW90 series transmitters.

Specifications

Table 14 Performance

Property	Description / Value
Carbon dioxide	
Measurement range	0 … 5000 ppm
Accuracy +20 … +30 °C (+ 68 … + 86 °F) +10 ... +20 °C, +30 ... +40 °C (+50 ... +68 °F, +86 ... +104 °F) -5 ... +10 °C, +40 ... +55°C (+23 ... +50 °F, +104 ... +131 °F)	 ± (30 ppm + 2 % of reading) ± (35 ppm + 2.7 % of reading) ± (45 ppm + 3.8 % of reading)
Stability in typical HVAC applications	Total accuracy at room temperature ±75 ppm at 600 and 1000 ppm including 5 years drift*
Carbon dioxide sensor	Vaisala CARBOCAP® GM10
Temperature	
Measurement range	-5 ... +55 °C (+23 ... +131 ºF)
Accuracy +20 ... +30 °C (+68 ... +86 °F) +10 ... +20 °C, +30 ... +40°C (+50 ... +68 °F, +86 ... +104 °F) -5 ... +10 °C, +40...+55°C (+23 ... +50 °F, +104 ... +131 °F)	 ±0.5 °C (± 0.9 °F) ±0.6 °C (± 1.08 °F) ±0.8 °C (± 1.44 °F)
Temperature sensor	Digital temperature sensor
Relative humidity	
Measurement range	0 ... 95 %RH, non-condensing
Accuracy Temperature range +10 ... +40 °C (+50 ... +104 °F) 0 ... 60 %RH 60 ...80 %RH 80 ... 95 %RH Temperature range -5 ... +10 °C, +40 ... + 55 °C (+23 ... +50 °F, +104 ... +131°F) 0 ... 60 %RH 60 ...80 %RH 80 ... 95 %RH	 ±2.5 %RH ±3.0 %RH ±4.0 %RH ±3.5 %RH ±4.0 %RH ±5.0 %RH
Stability in typical HVAC applications	±0.5 %RH/year
Humidity sensor	Vaisala HUMICAP® 180R

*Complies with CEC-400-2008-001-CMF

AKRIBIS · www.akribis.info · contacto@akribis.info

Table 15 Operating Environment

Property	Description / Value
Operating temperature range	-5 ... +55 °C (+23 ... +131 °F)
Operating humidity range	0 … 95 %RH Dewpoint <30 °C (+86 °F)
Storage temperature range	-30 ... +60 °C (-22 ... +140 °F)
Electromagnetic compliance	EN61326-1, Industrial Environment

Table 16 Inputs and Outputs

Property	Description / Value
Current output models	
Outputs	0/4 … 20 mA 2 and 3 channel models available
Loop resistance	0 … 600 Ω
Supply voltage	18 … 35 VDC 24 VAC ± 20% 50/60 Hz
Max. power consumption	<2 W pulsed (outputs 3×21mA)
Typical power consumption	<1.2 W pulsed (outputs 3×12 mA)
Voltage output models	
Outputs	0 … 5/10 V 2 and 3 channel models available
Load resistance	10 kΩ min.
Supply voltage	18 … 35 VDC 24 VAC ± 20% 50/60 Hz
Power consumption	<1 W pulsed (output load 3×10 kΩ)
Digital output models	
Supply voltage	18 ... 35 VDC 24 VAC ±20 % 50/60 Hz
Max. power consumption (with 120 Ω termination)	<1.5 W pulsed
Output type	RS-485 (galvanic isolation, 1.5 kV)
RS-485 end of line termination	Enable with jumper, 120 Ω
Supported protocols	Selectable by DIP switch
BACnet MS/TP	
Operating mode	Selectable Master/Slave
Address range, master mode	0 ... 127
Address range, slave mode	128 ... 255
Modbus RTU	
Address range	0 ... 247
Service port	RS-485 line for temporary service use

Table 17 Mechanics

Property	Description / Value
IP class	IP30
Standard housing color	White (RAL9003*)
Housing material	ABS/PC, UL-V0 approved
Output connector	Screw terminals max. wire size 2 mm^2 (AWG14)
Service port connector	4-pin M8
Weight	163 g

*RAL code is only indicative with potential small variations in color shade.

AKRIBIS · www.akribis.info · contacto@akribis.info

Spare Parts and Accessories

Information on spare parts, accessories, and calibration products is available online at www.vaisala.com and store.vaisala.com.

Table 18 GMW90 Series Spare Parts and Accessories

Description	Order Code
Carbon dioxide measurement module (for all models)	GM10SP
Temperature measurement module (for CO2+T models)	TM10SP
Humidity and temperature measurement module (CO2+T+RH models)	HTM10SP
Decorative cover set (10 pcs.)	236285
Connection cable for HM70/GM70 hand-held meter	219980
USB cable for computer connection	219690
Standard white sliding cover, blank	DRW237354SP
Standard white sliding cover with hole for display	DRW237339SP

AKRIBIS · www.akribis.info · contacto@akribis.info

Dimensions in mm

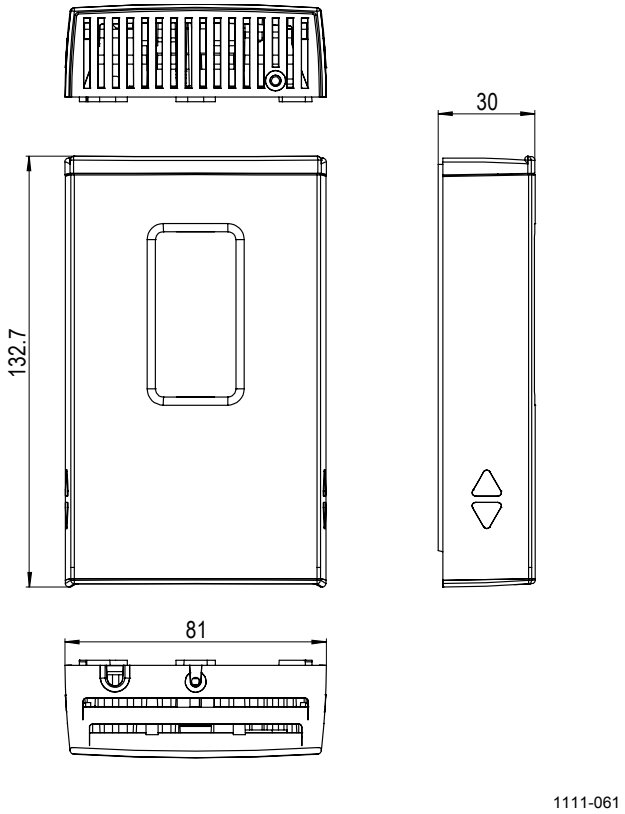

Figure 33 GMW90 Series Dimensions

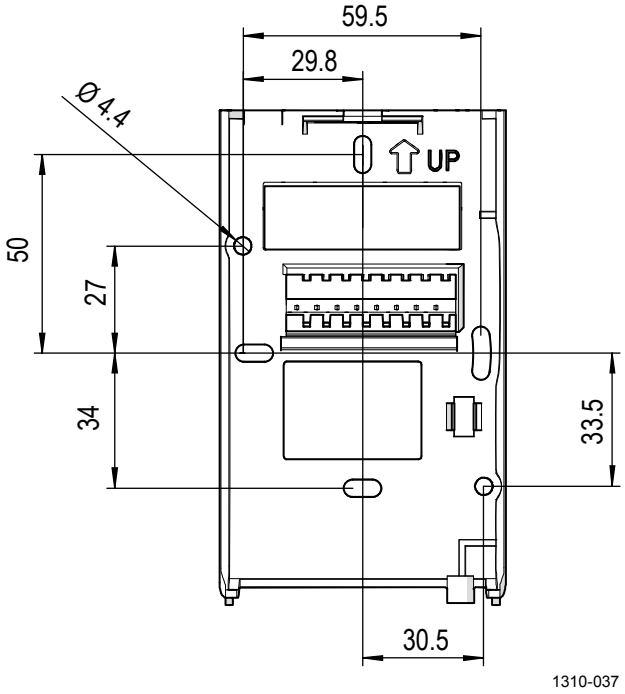

Figure 34 Dimensions of the Mounting Base

AKRIBIS · www.akribis.info · contacto@akribis.info

APPENDIX A

BACNET REFERENCE

This appendix describes the BACnet protocol implementation of the GMW90 series digital transmitters.

NOTE	For more information on BACnet, refer to addendum D of the ANSI/ASHRAE standard 135-2001: BACnet®—A Data Communication Protocol for Building Automation and Control Networks.

NOTE	Serial line settings such as baud rate are configured using DIP switches. See section Configuration of Digital Output Models on page 21.

BACnet Protocol Implementation Conformance Statement

This statement is a part of the BACnet standard and is required for its use.

Vendor Name:	Vaisala Oyj
Product Name:	XMW90
Product Model Numbers:	GMW95 | GMW95R
Applications Software Version:	1.1.28 and later
Firmware Version:	1.1.0.0 and later
BACnet Protocol Revision:	Version 1, Revision 4
BACnet Standardized Device Profile (Annex L):	☐ BACnet Operator Workstation (B-OWS) ☐ BACnet Building Controller (B-BC) ☐ BACnet Advanced Application Controller (B-AAC) ☐ BACnet Application Specific Controller (B-ASC) ☑ BACnet Smart Sensor (B-SS) ☐ BACnet Smart Actuator (B-SA)
List of all BACnet Interoperability Building Blocks Supported (Annex K): See also section BIBBs Supported on page 95.	DS-RP-B, DS-RPM-B, DS-WP-B, DS-COVU-B, DM-DDB-B, DM-DOB-B, DM-DCC-B, DM-RD-B

AKRIBIS · www.akribis.info · contacto@akribis.info

Segmentation Capability	☐ Segmentation Requests Supported ☐ Segmentation Responses Supported
Standard Object Types Supported	☑ Analog Input ☐ Analog Output ☑ Analog Value ☐ Averaging ☐ Binary Input ☐ Binary Output ☐ Binary Value ☐ Calendar ☐ Command ☑ Device ☐ Event Enrollment ☐ File ☐ Group ☐ Life Safety Point ☐ Life Safety Zone ☐ Loop ☐ Multistate Input ☐ Multistate Output ☐ Multistate Value ☐ Notification Class ☐ Program ☐ Schedule ☐ Trend Log
Data Link Layer Options	☐ BACnet Internet Protocol (IP) (Annex J) ☐ BACnet IP (Annex J), Foreign Device ☐ ISO 88023, Ethernet (Clause 7) ☐ ANSI/ATA 878.1, 2.5 MB ARCNET® network (Clause 8) ☐ ANSI/ATA 878.1, RS485 ARCNET network (Clause 8), baud rates: _____ ☑ Master-Slave/Token-Passing (MS/TP) master (Clause 9), baud rates: 9600, 19200, 38400, 57600, 76800, 115200 ☑ MS/TP slave (Clause 9), baud rates: 9600, 19200, 38400, 57600, 76800, 115200 ☐ Point-To-Point, EIA 232 (Clause 10), baud rates: _____ ☐ Point-To-Point, modem (Clause 10), baud rates: _____ ☐ LonTalk® protocol (Clause 11), medium: _____ ☐ Other:

AKRIBIS · www.akribis.info · contacto@akribis.info

Device Address Binding Is static device binding supported? (required for two-way communication between MS/TP slaves and other devices)	☐ Yes ☑ No
Networking Options	☐ Router, Clause 6: ☐ Annex H, BACnet Tunneling Router over IP ☐ BACnet/IP Broadcast Management Device (BBMD)
Does the BBMD support registrations by Foreign Devices?	☐ Yes
	☐ No
Character Sets Supported	☑ UTF-8 / ANSI X3.4 ☐ IBM®/Microsoft® DoubleByte Character Set (DBCS) ☐ ISO 8859-1 ☐ ISO 10646 Universal Character Set-2 (UCS2) ☐ ISO 10646 (UCS-4) ☐ Japanese Industrial Standard (JIS) C 6226
Types of non-BACnet equipment /network(s) supported:	None

Transmitter Models and Objects

The availability of BACnet objects depends on the transmitter model. The following objects are present on all GMW90 series models:

- Device object
- Carbon dioxide object
- Temperature object

The following additional objects are present on models that include relative humidity measurement (for example, GMW95R):

- Relative humidity object
- Calculated humidity objects
- Operation pressure object
- Operation altitude object

AKRIBIS · www.akribis.info · contacto@akribis.info

Device Object

Note the following:

- Writable means writable via BACnet
- **Max_Master** and **Max_Info_Frames** are required in a Master device.
- **UV** = Configured at Vaisala factory to a unique value. See additional information after the table.

Table 19 Device Object Properties

Property	Data type (Application Type)	Writable (Conformance Code)	Value or Initial Value	Persistence
Object_Identifier	BACnetObjectIdentifier	Y (R)	02 00 00 00 (hex) Object Type = 8, Instance = xxxxxxx **UV**	Nonvolatile
Object_Name	CharacterString[50]	Y (R)	"xMW9xx_xxxxxxxx" **UV**	Nonvolatile
Object_Type	BACnetObjectType (ENUMERATED)	N (R)	8 (Device Object)	Fixed
System_Status	BACnetDeviceStatus (ENUMERATED)	N (R)	0 (Operational)	Volatile
Vendor_Name	Character String	N (R)	"Vaisala Oyj"	Fixed
Vendor_Identifier	Unsigned16	N (R)	339	Fixed
Model_Name	CharacterString	N (R)	Product model. For example, “GMW95”	Nonvolatile
Firmware_Revision	CharacterString	N (R)	X.X.X.X (BACnet interface)	Fixed
Application_Software_Revision	CharacterString	N (R)	X.X.X.X	Fixed
Location	Character String[50]	Y (O)	“Location”	Nonvolatile
Description	Character String[50]	Y (O)	“Description”	Nonvolatile
Protocol_Version	Unsigned	N (R)	1	Fixed
Protocol_Revision	Unsigned	N (R)	4	Fixed
Protocol_Services	BACnetProtocolServices Supported (BIT STRING)	N (R)	Read Property Read Property Multiple Write Property Device Communication Control Reinitialize Device Who-Is Who-Has	Fixed
Protocol_Object_Types_Supported	BACnetObjectTypesSupported (BIT STRING)	N (R)	Analog Input Analog Value Device	Fixed
Object_List	BACnetARRAY[N]of BACnetObjectIdentifier	N (R)	Device Object AI1 (Carbon Dioxide) AI2 (Relative Humidity) AI3 (Temperature) AI4 (Dewpoint) AI5 (Dewpoint (Tdf)) AI6 (Dewpoint depression) AI7 (Wet bulb temperature) AI8 (Absolute humidity) AI9 (Mixing ratio) AI10 (Enthalpy) AV1 (Pressure) AV2 (Altitude)	Fixed

AKRIBIS · www.akribis.info · contacto@akribis.info

Property	Data type (Application Type)	Writable (Conformance Code)	Value or Initial Value	Persistence
Max_APDU_Length_Accepted	Unsigned16	N (R)	244	Fixed
Max_Master	Unsigned16 (1..127)	Y (R/O)	127	Nonvolatile
Max_Info_Frames	Unsigned	N (R/O)	1	Fixed
Segmentation_Supported	BACnetSegmentation (ENUMERATED)	N (R)	3 (No segmentation)	Fixed
APDU_Timeout	Unsigned	N (R)	3000 (ms)	Fixed
APDU_Retries	Unsigned	N (R)	0	Fixed
Device_Address_Binding	List of BACnetAddressBinding	N (R)	NULL	Fixed
Database_Revision	Unsigned	N (R)	0	Volatile

Object_Identifier: Must be unique in BACnet network. As Object Identifier is 22 bits long its value range is 0 ... 4194303. Each device is assigned a random value in this range at Vaisala factory.

Object_Name: Must be unique in BACnet network. Default object name contains the name and serial number of the device. For example, transmitter model GMW95 with serial number G1234567 receives the default object name "GMW95_G1234567".

System_Status: System status can be OPERATIONAL (0) or NON-OPERATIONAL (4). Device goes to NON-OPERATIONAL state in case of fatal error.

Protocol_Services: Who-Is, I-Am, Who-Has, I-Have and UnconfirmedCOVNotification services are available only when XMW90 is MS/TP master. Reinitialize Device service must be password protected. According to BACnet protocol, password is character string having max 20 characters. Default password is "1234". Password can be changed through the service port by using the **BACNET** command. See section Set BACnet Parameters on page 61.

Database_revision: This is changed during operation according to section 12.11.35 of ANSI/ASHRAE standard 135-2008.

AKRIBIS · www.akribis.info · contacto@akribis.info

Carbon Dioxide Object

Table 20 Carbon Dioxide Object Properties

Property	Data type (Application Type)	Writable (Conformance Code)	Value or Initial Value	Persistence
Object_Identifier	BACnetObjectIdentifier	No (R)	00 00 00 01 (hex) Object Type = 0, Instance = 1	Nonvolatile
Object_Name	CharacterString	No (R)	"CO2"	Nonvolatile
Object_Type	BACnetObjectType (ENUMERATED)	No (R)	0 (Analog Input)	Fixed
Present_Value	Real	Yes (When Oos) (R)	0.0	Volatile
Description	CharacterString	No (O)	"Carbon Dioxide"	Nonvolatile
Units	BACnetEngineeringUnits (ENUMERATED)	No (R)	96 (parts-per-million)	Nonvolatile
Status_Flags	BACnet Status Flags (BIT STRING)	Yes (when OoS) (R)	0 (FAULT == FALSE)	Volatile
Reliability	BACnet Reliability (ENUMERATED)	Yes (when OoS) (O)	0 (NO FAULT DETECTED)	Volatile
Event State	BACnetEventState (ENUMERATED)	No (R)	0 (NORMAL)	Volatile
Out_of_Service	BOOLEAN	Yes (R)	0 (FALSE)	Volatile
COV_Increment	Real	Yes (O)	NaN (COV reporting disabled)	Nonvolatile
Min_Pres_Value	Real	No (O)	0.0 (same as limit for UNDER_RANGE)	Nonvolatile
Max_Pres_Value	Real	No (O)	2400 (same as limit for OVER_RANGE)	Nonvolatile

Table 21 Status Flags

Flag	State	Cause
IN_ALARM	FALSE	Event State equals 0 (NORMAL)
	TRUE	Event State not 0
FAULT	FALSE	Reliability equals 0 (NO FAULT DETECTED)
	TRUE	Reliability not 0
OVERRIDDEN	FALSE	Always FALSE
OUT_OF_SERVICE	FALSE	Present Value may NOT be written via BACnet
	TRUE	Present Value may be written via BACnet[1)]

Table 22 Reliability

State	Cause
0 NO_FAULT_DETECTED	
1 NO_SENSOR	No contact to measurement module
2 OVER_RANGE	CO2 level over BAC_CO2_MAX_VALUE
3 UNDER_RANGE	CO2 level under BAC_CO2_MIN_VALUE
7 UNRELIABLE_OTHER	Other measurement error

Table 23 Event State

State	Cause
0 NORMAL	Reliability equals 0 (NO FAULT DETECTED)
1 FAULT	Reliability not 0

AKRIBIS · www.akribis.info · contacto@akribis.info

Temperature Object

Table 24 Temperature Object Properties

Property	Data type (Application Type)	Writable (Conformance Code)	Value or Initial Value	Persistence
Object_Identifier	BACnetObjectIdentifier	No (R)	00 00 00 03 (hex) Object Type = 0, Instance = 3	Nonvolatile
Object_Name	CharacterString	No (R)	"T"	Nonvolatile
Object_Type	BACnetObjectType (ENUMERATED)	No (R)	0 (Analog Input)	Fixed
Present_Value	Real	Yes (When Oos) (R)	0.0	Volatile
Description	CharacterString	No (O)	"Temperature"	Nonvolatile
Units	BACnetEngineeringUnits (ENUMERATED)	Yes (R)	62 (degrees-Celsius) Possible units are C (62) or F (64).	Nonvolatile
Status_Flags	BACnet Status Flags (BIT STRING)	Yes (when OoS) (R)	0 (FAULT == FALSE)	Volatile
Reliability	BACnet Reliability (ENUMERATED)	Yes (when OoS) (O)	0 (NO FAULT DETECTED)	Volatile
Event State	BACnetEventState (ENUMERATED)	No (R)	0 (NORMAL)	Volatile
Out_of_Service	BOOLEAN	Yes (R)	0 (FALSE)	Volatile
COV_Increment	Real	Yes (O)	NaN (COV reporting disabled)	Nonvolatile
Min_Pres_Value	Real	No (O)	-40.0 (same as limit for UNDER_RANGE)	Nonvolatile
Max_Pres_Value	Real	No (O)	+80.0 (same as limit for OVER_RANGE)	Nonvolatile

Table 25 Status Flags

Flag	State	Cause
IN_ALARM	FALSE	Event State equals 0 (NORMAL)
	TRUE	Event State not 0
FAULT	FALSE	Reliability equals 0 (NO FAULT DETECTED)
	TRUE	Reliability not 0
OVERRIDDEN	FALSE	Always FALSE
OUT_OF_SERVICE	FALSE	Present Value may NOT be written via BACnet
	TRUE	Present Value may be written via BACnet

Table 26 Reliability

State	Cause
0 NO_FAULT_DETECTED	
1 NO_SENSOR	No contact to measurement module
2 OVER_RANGE	T over +80 °C
3 UNDER_RANGE	T under -40 °C
7 UNRELIABLE_OTHER	Other measurement error

Table 27 Event State

State	Cause
0 NORMAL	Reliability equals 0 (NO FAULT DETECTED)
1 FAULT	Reliability not 0

AKRIBIS · www.akribis.info · contacto@akribis.info

Relative Humidity Object

Table 28 Relative Humidity Object Properties

Property	Data type (Application Type)	Writable (Conformance Code)	Value or Initial Value	Persistence
Object_Identifier	BACnetObjectIdentifier	No (R)	00 00 00 02 (hex) Object Type = 0, Instance = 2	Nonvolatile
Object_Name	CharacterString	No (R)	"RH"	Nonvolatile
Object_Type	BACnetObjectType (ENUMERATED)	No (R)	0 (Analog Input)	Fixed
Present_Value	Real	Yes (When Oos) (R)	0.0	Volatile
Description	CharacterString	No (O)	"Relative Humidity"	Nonvolatile
Units	BACnetEngineeringUnits (ENUMERATED)	No (R)	29 (percent-relative-humidity)	Nonvolatile
Status_Flags	BACnet Status Flags (BIT STRING)	Yes (when OoS) (R)	0 (FAULT == FALSE)	Volatile
Reliability	BACnet Reliability (ENUMERATED)	Yes (when OoS) (O)	0 (NO FAULT DETECTED)	Volatile
Event State	BACnetEventState (ENUMERATED)	No (R)	0 (NORMAL)	Volatile
Out_of_Service	BOOLEAN	Yes (R)	0 (FALSE).	Volatile
COV_Increment	Real	Yes (O)	NaN (COV reporting disabled)	Nonvolatile
Min_Pres_Value	Real	No (O)	0.0 (same as limit for UNDER_RANGE)	Nonvolatile
Max_Pres_Value	Real	No (O)	100 (same as limit for OVER_RANGE)	Nonvolatile

Table 29 Status Flags

Flag	State	Cause
IN_ALARM	FALSE	Event State equals 0 (NORMAL)
	TRUE	Event State not 0
FAULT	FALSE	Reliability equals 0 (NO FAULT DETECTED)
	TRUE	Reliability not 0
OVERRIDDEN	FALSE	Always FALSE
OUT_OF_SERVICE	FALSE	Present Value may NOT be written via BACnet
	TRUE	Present Value may be written via BACnet

Table 30 Reliability

State	Cause
0 NO_FAULT_DETECTED	
1 NO_SENSOR	No contact to measurement module
2 OVER_RANGE	RH over 100%
3 UNDER_RANGE	RH under 0%
7 UNRELIABLE_OTHER	Other measurement error

Table 31 Event State

State	Cause
0 NORMAL	Reliability equals 0 (NO FAULT DETECTED)
1 FAULT	Reliability not 0

AKRIBIS · www.akribis.info · contacto@akribis.info

Calculated Humidity Objects

Table 32 Calculated Humidity Objects

Instance	Name	Description	Unit
4	"Td"	"Dewpoint"	62/64 (ºC/ ºF)
5	"Tdf"	"Dewpoint"	62/64 (ºC/ ºF)
6	"dTd"	"Dewpoint depression"	121/120 (ΔºK/ ΔºF)
7	"Tw"	"Wet bulb temperature"	62/64 (ºC/ ºF)
8	"a"	"Absolute humidity"	217/2000 grams-per-cubic-meter / grains-per-cubic-foot (Vaisala defined unit)
9	"x"	"Mixing ratio"	28/2001 grams-of-water-per-kilogram-dry-air / grains-of-water-per-pound (Vaisala defined unit)
10	"h"	"Enthalpy"	149/24 kilojoules-per-kilogram-dry-air / btus-per-pound-of-dry-air

Table 33 Calculated Humidity Object Properties

Property	Data type (Application Type)	Writable (Conformance Code)	Value or Initial Value	Persistence
Object_Identifier	BACnetObjectIdentifier	No (R)	00 00 00 xx (hex) Object Type = 0, Instance = x See Table 32 above.	Nonvolatile
Object_Name	CharacterString	No (R)	See Table 32 above.	Nonvolatile
Object_Type	BACnetObjectType (ENUMERATED)	No (R)	0 (Analog Input)	Fixed
Present_Value	Real	Yes (When Oos) (R)	0.0	Volatile
Description	CharacterString	No (O)	See table above	Nonvolatile
Units	BACnetEngineeringUnits (ENUMERATED)	No (R)	See table above	Nonvolatile
Status_Flags	BACnet Status Flags (BIT STRING)	Yes (when OoS) (R)	0 (FAULT == FALSE)	Volatile
Reliability	BACnet Reliability (ENUMERATED)	Yes (when OoS) (O)	0 (NO FAULT DETECTED)	Volatile
Event State	BACnetEventState (ENUMERATED)	No (R)	0 (NORMAL)	Volatile
Out_of_Service	BOOLEAN	Yes (R)	0 (FALSE)	Volatile
COV_Increment	Real	Yes (O)	NaN (COV reporting disabled)	Nonvolatile

Table 34 Status Flags

Flag	State	Cause
IN_ALARM	FALSE	Event State equals 0 (NORMAL)
	TRUE	Event State not 0
FAULT	FALSE	Reliability equals 0 (NO FAULT DETECTED)
	TRUE	Reliability not 0
OVERRIDDEN	FALSE	Always FALSE
OUT_OF_SERVICE	FALSE	Present Value may NOT be written via BACnet
	TRUE	Present Value may be written via BACnet

AKRIBIS · www.akribis.info · contacto@akribis.info

Table 35 Reliability

State	Cause
0 NO_FAULT_DETECTED	
1 NO_SENSOR	No contact to measurement module
2 OVER_RANGE	RH over 100%
3 UNDER_RANGE	RH under 0%
7 UNRELIABLE_OTHER	Other measurement error

Table 36 Event State

State	Cause
0 NORMAL	Reliability equals 0 (NO FAULT DETECTED)
1 FAULT	Reliability not 0

Operation Pressure Object

Set current atmospheric pressure to apply pressure compensation to CO_2 measurement, and to improve the calculation accuracy of pressure dependent humidity parameters.

NOTE Pressure and Altitude objects are linked together. If Present Value in one object is changed, Present Value in another object is changed accordingly.

Table 37 Operation Pressure Object Properties

Property	Data type	Writable	Value or Initial Value
Object Identifier	BACnet Object Identifier	No	00 80 00 01 (hex) Object Type = 2, Instance = 1
Object Name	Character String	No	"OPER P"
Object Type	BACnet Object Type	No	2 (Analog Value)
Present Value	Real	Yes	1013.25
Description	Character String	No	"Operation Pressure"
Units	BACnet Engineering Units	No	133 (hectopascals)
Status Flags	BACnet Status Flags	No	0 (FAULT == FALSE)
Event State	BACnet Event State	No	0 (NORMAL, does not change)
Out of Service	BOOLEAN	No	0 (FALSE)

Table 38 Status Flags

Flag	State	Cause
IN_ALARM	FALSE	Always FALSE
FAULT	FALSE	Always FALSE
OVERRIDDEN	FALSE	Always FALSE
OUT_OF_SERVICE	FALSE	Always FALSE

AKRIBIS · www.akribis.info · contacto@akribis.info

Operation Altitude Object

Set operating altitude to apply pressure compensation to CO_2 measurement, and to improve the calculation accuracy of pressure dependent humidity parameters.

NOTE Pressure and Altitude objects are linked together. If Present Value in one object is changed, Present Value in another object is changed accordingly.

Table 39 Operation Altitude Object Parameters

Property	Data type	Writable	Value or Initial Value
Object Identifier	BACnet Object Identifier	No	00 80 00 02 (hex) Object Type = 2, Instance = 2
Object Name	Character String	No	"OPER Altitude"
Object Type	BACnet Object Type	No	2 (Analog Value)
Present Value	Real	Yes	0.0
Description	Character String	No	"Operating Altitude"
Units	BACnet Engineering Units	Yes	31 (meters) or 33 (feet)
Status Flags	BACnet Status Flags	No	0 (FAULT == FALSE)
Event State	BACnet Event State	No	0 (NORMAL, does not change)
Out of Service	BOOLEAN	No	0 (FALSE)

Table 40 Status Flags

Flag	State	Cause
IN_ALARM	FALSE	Always FALSE
FAULT	FALSE	Always FALSE
OVERRIDDEN	FALSE	Always FALSE
OUT_OF_SERVICE	FALSE	Always FALSE

AKRIBIS · www.akribis.info · contacto@akribis.info

BIBBs Supported

Table 41 below lists all the BIBBs which, per ANSI/ASHRAE Standard 135-2008, could be supported by a BACnet Smart Sensor (B-ASC). The checked BIBBs are supported by the device.

Table 41 BACnet Smart Sensor BIBBs Support

Application Service (B-SS)	Designation	Supported
Data Sharing - Read Property - A	DS-RP-A	☐
Data Sharing - Read Property - B	DS-RP-B	☑
Data Sharing - Read Property Multiple - A	DS-RPM-A	☐
Data Sharing - Read Property Multiple - B	DS-RPM-B	☑
Data Sharing - Write Property - A	DS-WP-A	☐
Data Sharing - Write Property - B	DS-WP-B	☑
Data Sharing - Write Property Multiple - B	DS-WPM-B	☐
Data Sharing - COV - Unsolicited - A	DS-COVU-A	☐
Data Sharing - COV - Unsolicited - B	DS-COVU-B	☑
Alarm and Event - Notification Internal - B	AE-N-I-B	☐
Alarm and Event - ACK - B	AE-ACK-B	☐
Alarm and Event - Information - B	AE-INFO-B	☐
Alarm and Event - Enrollment Summary - B	AE-ESUM-B	☐
Scheduling - External - B	SCHED-E-B	☐
Trending - Viewing and Modifying Trends Internal - B	T-VMT-I-B	☐
Trending - Automated Trend Retrieval - B	T-ATR-B	☐
Device Management - Dynamic Device Binding - A	DM-DDB-A	☐
Device Management - Dynamic Device Binding - B	DM-DDB-B	☑
Device Management - Dynamic Object Binding - A	DM-DOB-A	☐
Device Management - Dynamic Object Binding - B	DM-DOB-B	☑
Device Management - Device Communication Control - B	DM-DCC-B	☑
Device Management - Time Synchronization - B	DM-TS-B	☐
Device Management - UTC Time Synchronization - B	DM-UTC-B	☐
Device Management - Reinitialize Device - B	DM-RD-B	☑
Device Management - Backup and Restore - B	DM-BR-B	☐
Network Management - Connection Establishment - A	NM-CE-A	☐

AKRIBIS · www.akribis.info · contacto@akribis.info

Application Services Supported

Table 42 below lists all the BACnet standard application services. The checked services are supported by the device.

Table 42 BACnet Standard Application Services Support

Application Service	Initiates Requests	Executes Requests
AcknowledgeAlarm	☐	☐
AddListElement	☐	☐
AtomicReadFile	☐	☐
AtomicWriteFile	☐	☐
ConfirmedCOVNotification	☐	☐
ConfirmedEventNotification	☐	☐
ConfirmedPrivateTransfer	☐	☐
ConfirmedTextMessage	☐	☐
CreateObject	☐	☐
DeleteObject	☐	☐
DeviceCommunicationControl	☐	☑
Disconnect-Connection-To-Network	☐	☐
Establish-Connection-To-Network	☐	☐
GetAlarmSummary	☐	☐
GetEnrollmentSummary	☐	☐
GetEventInformation	☐	☐
I-Am	☑	☐
I-Am-Router-To-Network	☐	☐
I-Could-Be-Router-To-Network	☐	☐
I-Have	☑	☐
Initialize-Routing-Table	☐	☐
Initialize-Routing-Table-Ack	☐	☐
LifeSafetyOperation	☐	☐
ReadProperty	☐	☑
ReadPropertyConditional	☐	☐
ReadPropertyMultiple	☐	☑
ReadRange	☐	☐
ReinitializeDevice	☐	☑
RemoveListElement	☐	☐
SubscribeCOV	☐	☐
SubscribeCOVProperty	☐	☐
TimeSynchronization	☐	☐
UnconfirmedCOVNotification	☑	☐
UnconfirmedEventNotification	☐	☐
UnconfirmedPrivateTransfer	☐	☐
UnconfirmedTextMessage	☐	☐
UTCTimeSynchronization	☐	☐
VT-Close	☐	☐
VT-Data	☐	☐
VT-Open	☐	☐
Who-Has	☐	☑
Who-Is	☐	☑
Who-Is-Router-To-Network	☐	☐
WriteProperty	☐	☑
WritePropertyMultiple	☐	☐

AKRIBIS · www.akribis.info · contacto@akribis.info

APPENDIX B
MODBUS REFERENCE

This appendix describes the Modbus protocol implementation of the GMW90 series digital transmitters.

NOTE For more information on Modbus protocol, refer to the Specification and Implementation Guide for Modbus Over Serial Line.

NOTE Serial line settings such as baud rate are configured using DIP switches. See section Configuration of Digital Output Models on page 21.

Table 43 Modbus Functions Supported by GMW90

Function Code	Name
03 (0x03)	Read Holding Registers
04 (0x04)	Read Input Register
06 (0x06)	Write Single Register
16 (0x10)	Write Multiple Registers
43 / 14 (0x2B / 0x0E)	Read Device Identification

Table 44 GMW90 Modbus Measurement Data Registers

Name	Metric float	Metric integer	Metric unit	Non-metric float	Non-metric integer	Non-metric unit
CO2	0001…0002	0257 (×1)	ppm	6401…6402	6657 (×1)	ppm
RH	0003…0004	0258 (×0.01)	%RH	6403…0004	6658 (×0.01)	%RH
T	0005…0006	0259 (×0.01)	°C	6405…0006	6659 (×0.01)	°F
Td	0007…0008	0260 (×0.01)	°C	6407…0008	6660 (×0.01)	°F
Tdf	0009…0010	0261 (×0.01)	°C	6409…0010	6661 (×0.01)	°F
dTd	0011…0012	0262 (×0.01)	°C	6411…0012	6662 (×0.01)	°F
Tw	0013…0014	0263 (×0.01)	°C	6413…0014	6663 (×0.01)	°F
a	0015…0016	0264 (×0.01)	g/m3	6415…0016	6664 (×0.01)	gr/ft3
x	0017…0018	0265 (×0.01)	g/kg	6417…0018	6665 (×0.01)	gr/lb
h	0019…0020	0266 (×0.01)	kJ/kg	6419…0020	6666 (×0.01)	btu/lb

Values read from the integer registers must be multiplied with the provided multiplier to get the actual value. All integer values are signed.

AKRIBIS · www.akribis.info · contacto@akribis.info

Available measurements depend on the transmitter model. Values may be unavailable also in case of device failure. Read status registers or exception status outputs to check for failures. Accessing unavailable (unsupported or temporarily missing) measurement data does not generate an exception. “Unavailable” value (a quiet NaN for floating point data or 0x8000 for integer data) is returned instead. An exception is generated only for any access outside the GMW90 registers.

A “quiet NaN” value is returned for unavailable values. Writing any NaN or infinite value is silently ignored.

NOTE A complete 32-bit floating point value should be read and written in a single Modbus transaction.

Table 45 GMW90 Modbus Status Registers (Read-only)

Name	Address	Description
Error code (bits 15…0)	0513,6913	0 = no errors

Table 46 GMW90 Modbus Error Code Bits

Bit	Description
0	Any critical error is active. Requires transmitter restart or maintenance.
1	Any error is active. May be recoverable.
2	Internal error (Flash)
3	Module communication or compatibility error
4	HTM10 module error
5	Temperature measurement error
6	Humidity measurement error
7	GM10 module error
8	CO_2 measurement error
9	Miscellaneous error

Table 47 GMW90 Modbus Configuration Parameter Registers

Name	Metric float	Metric integer	Metric unit & valid range	Non-metric float	Non-metric integer	Non-metric unit & valid range
Pressure	0777…0779	1029 (×1)	700…1100 hPa	7177…7179	7429 (×1)	700 … 1100 hPa
Elevation	0779…0780	1030 (×1)	-700...2300 m	7179…7180	7430 (×1)	-2300 … 10000 ft

NOTE Elevation is linked to pressure according to the following equation:

$$p = 101325\ (1 - 2.25577\ 10^{-5}\ h)^{5.25588}$$

where p is pressure in Pa and h is altitude above sea level in m. This means that changing altitude will also change pressure and vice versa.

AKRIBIS · www.akribis.info · contacto@akribis.info

Table 48 GMW90 Modbus Device Identification

Object Id	Object Name	Description
0x00	VendorName	“Vaisala”
0x01	ProductCode	Transmitter model (for example, “GMW95”)
0x02	MajorMinorVersion	Software version (for example, “1.0.0”)
0x03	VendorUrl	“http://www.vaisala.com/”
0x04	ProductName	GMW90
0x80	SerialNumber	Serial number (e.g. “H0710040”)
0x81	CalibrationDate	Date of the last calibration (for example, “2012-08-07”, empty if not available)
0x82	CalibrationText	Information text of the last calibration (empty if not available)

Table 49 GMW90 Modbus Exception Responses

Code	Name	Reason
01	ILLEGAL FUNCTION	Unsupported function code
02	ILLEGAL DATA ADDRESS	Address out of valid ranges
03	ILLEGAL DATA VALUE	Otherwise invalid request

AKRIBIS · www.akribis.info · contacto@akribis.info

www.vaisala.com

M211659EN

AKRIBIS · www.akribis.info · contacto@akribis.info