USER GUIDE

GMP343

Vaisala · Authorized Partner

Distributed by AKRIBIS

VAISALA

USER'S GUIDE

Vaisala CARBOCAP® Carbon Dioxide Probe GMP343

M210514EN-E

AKRIBIS · www.akribis.info · contacto@akribis.info

PUBLISHED BY

Vaisala Oyj
P.O. Box 26
FI-00421 Helsinki
Finland

Phone (int.): +358 9 8949 1
Fax: +358 9 8949 2227

Visit our Internet pages at www.vaisala.com

© Vaisala 2013

No part of this manual may be reproduced, published or publicly displayed in any form or by any means, electronic or mechanical (including photocopying), nor may its contents be modified, translated, adapted, sold or disclosed to a third party without prior written permission of the copyright holder. Translated manuals and translated portions of multilingual documents are based on the original English versions. In ambiguous cases, the English versions are applicable, not the translations.

The contents of this manual are subject to change without prior notice.

This manual does not create any legally binding obligations for Vaisala towards customers or end users. All legally binding obligations and agreements are included exclusively in the applicable supply contract or the General Conditions of Sale and General Conditions of Service of Vaisala.

Table of Contents

CHAPTER 1
GENERAL INFORMATION 9
About This Manual 9
Contents of This Manual 9
Version Information 10
Documentation Conventions 10
ESD Protection 10
Recycling 11
Trademarks 11
Regulatory Compliances 11
Warranty 11

CHAPTER 2
PRODUCT OVERVIEW 13
Introduction to GMP343 13
GMP343 Transmitter Components 14
User Configurable CO2 Measurement 14
Principle of Operation 15
Optics Heating 16
Gas Sampling 16
Diffusion Sampling 16
Flow-Through Sampling 16
Sampling System 17
Optional Accessories 18
Soil Adapter Kits for In-Soil Applications 18
MI70 Indicator Connection 18
Recharging the Battery Pack 18
Structure of the MI70 Indicator 19
Using MI70 as a Display 20
Introduction of Function Keys and Menu Structure 20
Initialization of MI70 20
Navigation in Menu 21
Using MI70 in Recording 21
Transferring Recorded Data to PC 22

CHAPTER 3
INSTALLATION 23
Mounting 23
Wiring 24
Wiring of the Junction Box 25

AKRIBIS · www.akribis.info · contacto@akribis.info

CHAPTER 4

OPERATION 27

Connecting GMP343 to PC 27
Connection Cables 27
Installing the Driver for the USB Cable 27
Opening a Terminal Connection 28

Operation modes of the GMP343 30

Getting the Measurement Message 31
Measurement Units 31
Starting the Continuous Outputting 31
Stopping the Continuous Outputting 31
Setting the Continuous Outputting Interval 32
Outputting the Reading Once 32
Setting the Serial Interface Measurement Mode 32
Setting Communication Hardware 33
Serial Communication Settings 34

Formatting the Measurement Message 35
Formatting the Message 35
Setting Time 36

Networking Operation 37
Setting the Transmitter Address 37
Open and Close 38
Setting Echoing Mode 38
Preparation for Network Operation 39
Commands during Network Operation 39

Measurement Range, Data Filtering and Linearization 40
Setting the Measurement Range 40
Measurement Data Filtering 41
Median Filter 41
Averaging Filter 42
Smoothing Filter 42
How the Filtering Affects the Response Time 43
Setting the Median Filter 43
Setting the Averaging Filter 44
Setting the Smoothing Filter 44
Flushing the Filters (Resynchronization) 44
Linearization 45
Setting the Linearization ON/OFF 45

Temperature, Pressure, Relative Humidity, and Oxygen Compensations 45
Temperature Compensation ON/OFF 47
Setting the Oxygen Concentration 47
Setting Oxygen When the Device Is in POLL-mode 48
Oxygen Compensation Mode 48
Setting the Ambient Pressure (hPa) 49
Setting Pressure When the Device Is in POLL-mode 49
Pressure Compensation ON/OFF 50
Setting Ambient Relative Humidity 50
Setting Humidity When the Device Is in POLL-mode 50
Relative Humidity Compensation ON/OFF 51

Setting and Testing the Analog Outputs 52
Analog Output Hardware 52
Setting the Limit of the Current Output Range 53
Setting the High Limit of the Voltage Output Range 53

AKRIBIS · www.akribis.info · contacto@akribis.info

Setting the High Limit of the Concentration Range 54
Setting the Low Limit of the Concentration Range 54
Setting the Analog Output Overrange Clip 55
Testing the Analog Output 55
Setting the Analog Output Error Level 56
Device Information and Other General Commands 57
Device Information List 57
Show the Output Quantities 57
Linear and Multipoint Corrections 58
Error Messages 58
Command List 59
Showing the Parameters 59
Software Version Information 59
Memory Handling 60
Reverting the Factory Parameters 60
Saving the Setting 60
Setting the Optics Heating ON/OFF 60
Resetting the Transmitter 60

CHAPTER 5
CALIBRATION AND ADJUSTMENT 61
Calibration Interval 61
Factory Calibration and Adjustment 61
Calibration and Adjustment by the User 62
Calibration (Checking) 62
Checking the Compensations 62
Measurements in Reference Gases. 63
Adjustment in 1...2 Points 64
Adjustment in 3...8 Points 65
Example of the 2-Point Adjustment Procedure 65

CHAPTER 6
MAINTENANCE 69
Cleaning the Probe Housing 69
Changing the Filter and Cleaning the Optics (Diffusion Model Only) 70
Error States 72
Technical Support 73
Product Returns 73

CHAPTER 7
TECHNICAL DATA 75
Performance 75
Effects of Temperature, Pressure, Relative Humidity, and Oxygen 76
Temperature 76
Pressure 76
Humidity 77
Oxygen 77
Response time (90 %) 77
Inputs and Outputs 78

AKRIBIS · www.akribis.info · contacto@akribis.info

Operating Conditions 79
Materials 80
Spare Parts and Accessories 80

APPENDIX A
DIMENSIONS 81
GMP343 (Flow-through) 82
GMP343 (Diffusion) 83
Calibration Cap 84
Mounting Flange 85
Junction Box 86
Mounting Bracket 87

APPENDIX B
LIST OF COMMANDS 89
Measurement Commands 89
Filtering Commands 90
P, T and RH Compensation Commands 90
Device Handling Commands 90
Device Information Display Commands 90
Calibration Commands 91
Setting and Testing the Analog Outputs 91
Advanced Measurement Commands 91

AKRIBIS · www.akribis.info · contacto@akribis.info

List of Figures

Figure 1 Two Models of GMP343 14
Figure 2 Principle of Operation 15
Figure 3 Components of the Sampling System 17
Figure 4 Examples of Optional Accessories 18
Figure 5 Structure of the MI70 Indicator 19
Figure 6 Keyboard of MI70 20
Figure 7 Mounting GMP343 23
Figure 8 Entering Measurement Values 41
Figure 9 The Difference of the Two Filters in Time Response 43
Figure 10 Opening the Diffusion Filter 70
Figure 11 Optics 71
Figure 12 GMP343 Operating Conditions 79

AKRIBIS · www.akribis.info · contacto@akribis.info

List of Tables

Table 1 Manual Revisions 10
Table 2 Wiring Pins 24
Table 3 Communication Parameters 28
Table 4 Quantities 35
Table 5 Modifiers 35
Table 6 Averaging Times 42
Table 7 Troubleshooting Errors 72
Table 8 Effect of Temperature on Accuracy with Temperature Compensation 76
Table 9 Effect of Pressure on Accuracy with Pressure Compensation 76
Table 10 Diffusion Model 77
Table 11 Flow-through Model 77
Table 12 List of Spare Parts and Accessories 80

AKRIBIS · www.akribis.info · contacto@akribis.info

CHAPTER 1

GENERAL INFORMATION

This chapter provides general notes for the manual and the product.

About This Manual

This manual provides information for installing, operating, and maintaining the Vaisala CARBOCAP® Carbon Dioxide Probe GMP343.

Contents of This Manual

- Chapter 1, General Information: This chapter provides general notes for the manual and the product.
- Chapter 2, Product Overview: This chapter introduces the features of the GMP343.
- Chapter 3, Installation: This chapter provides you with information that is intended to help you install this product.
- Chapter 4, Operation: This chapter contains information that is needed to operate the GMP343.
- Chapter 5, Calibration and Adjustment: This chapter contains information for performing the calibration and adjustment of the GMP343.
- Chapter 6, Maintenance: This chapter instructs in the basic maintenance of the GMP343.
- Chapter 7, Technical Data: This chapter provides the technical data of the GMP343.
- Appendix A, Dimensions: This appendix contains the dimension drawings for the GMP343.
- Appendix B, List of Commands: This appendix lists the serial commands of the GMP343.

AKRIBIS · www.akribis.info · contacto@akribis.info

Version Information

Table 1 Manual Revisions

Manual Code	Description
M210514EN-E	November 2013. This manual. Updated probe cleaning instructions.
M210514EN-D	June 2013. Previous version. Updated temperature dependence specification. Updated Technical Support contact information and warranty information.

Documentation Conventions

Throughout the manual, important safety considerations are highlighted as follows:

WARNING	Warning alerts you to a serious hazard. If you do not read and follow instructions very carefully at this point, there is a risk of injury or even death.

CAUTION	Caution warns you of a potential hazard. If you do not read and follow instructions carefully at this point, the product could be damaged or important data could be lost.

NOTE	Note highlights important information on using the product.

ESD Protection

Electrostatic Discharge (ESD) can cause immediate or latent damage to electronic circuits. Vaisala products are adequately protected against ESD for their intended use. However, it is possible to damage the product by delivering electrostatic discharges when touching, removing, or inserting any objects inside the equipment housing.To make sure you are not delivering high static voltages yourself handle ESD sensitive components on a properly grounded and protected ESD workbench. When this is not possible, ground yourself to the equipment chassis before touching the connections. Ground yourself with a wrist strap and a resistive connection cord. When neither of the above is possible, touch a conductive part of the equipment chassis with your other hand before touching the boards.

AKRIBIS · www.akribis.info · contacto@akribis.info

Recycling

	Recycle all applicable material.

	Dispose of batteries and the unit according to statutory regulations. Do not dispose of with regular household refuse.

Trademarks

CARBOCAP® is a registered trademark of Vaisala Oyj.

Regulatory Compliances

Vaisala CARBOCAP® Carbon Dioxide Probe GMP343 is in compliance with the following EU directive, including the latest amendments, and with national legislation implementing this directive:

- EMC-Directive

Conformity is shown by compliance with the following standards:

- EN 61326-1: Electrical equipment for measurement, control, and laboratory use - EMC requirements - Generic Environment.
- CISPR16/22 class B, EN 61000-4-2, EN 61000-4-3, EN 61000-4-4, EN 61000-4-5, EN 61000-4-6.

Warranty

Visit our Internet pages for more information and our standard warranty terms and conditions: www.vaisala.com/warranty.

Please observe that any such warranty may not be valid in case of damage due to normal wear and tear, exceptional operating conditions, negligent handling or installation, or unauthorized modifications. Please see the applicable supply contract or Conditions of Sale for details of the warranty for each product.

AKRIBIS · www.akribis.info · contacto@akribis.info

AKRIBIS · www.akribis.info · contacto@akribis.info

CHAPTER 2

PRODUCT OVERVIEW

This chapter introduces the features of the GMP343.

Introduction to GMP343

Vaisala CARBOCAP® Carbon Dioxide Probe GMP343 is designed for high accuracy CO_2 measurements. The measurement is based on the advanced CARBOCAP® Single-Beam Dual-Wavelength NDIR technology. GMP343 consists of a CO_2 sensor, electronics, and a housing suitable for long-term outdoor use.There are two GMP343 models available: a flow-through model and a diffusion model. One adjustable analog output can be configured to output voltage or current signal (0 ... 2.5 V, 0 ... 5 V, 4 ... 20 mA). A digital output for RS-232/RS-485 communication is available. The measuring range options vary from 0 ... 1000 ppm to 0 ... 2 %CO_2.

Each GMP343 is calibrated using ±0.5 % accurate gases at 0 ppm, 200 ppm, 370 ppm, 600 ppm, 1000 ppm, 4000 ppm and 2 %. Calibration is also done at temperature points of -30 °C, 0 °C, 25 °C and 50 °C. If needed, the customer can recalibrate the instrument using the multipoint calibration (MPC) feature allowing up to 8 user-defined calibration points.

The GMP343 can be ordered with various adapter, filter, and connection cable options. For a list of spare parts and accessories, see section Spare Parts and Accessories on page 80.

AKRIBIS · www.akribis.info · contacto@akribis.info

GMP343 Transmitter Components

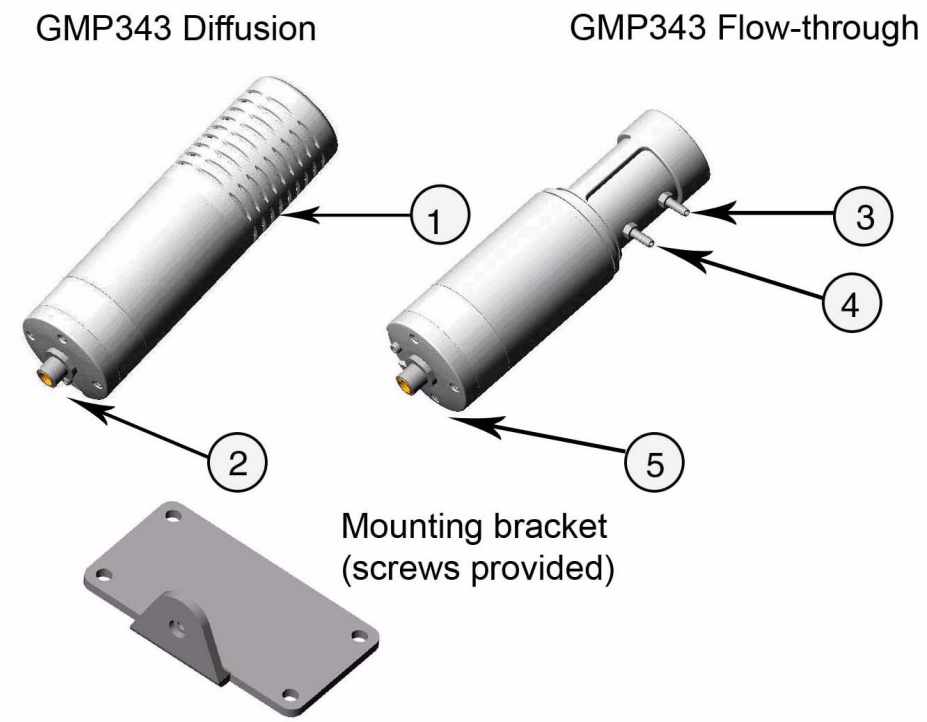

Figure 1 Two Models of GMP343

The following numbers refer to Figure 1 above.

1 = Filter
2 = Wiring connector
3 = Gas in
4 = Gas out
5 = Back flange (do not open)

NOTE	Warranty is void if the back flange of the GMP343 has been opened by the user.

User Configurable CO_2 Measurement

The measurement output of the GMP343 is user configurable. You may have the raw data without filtering or compensation, or you may set the filtering levels, enable compensation (pressure, temperature, relative humidity, and oxygen) and linearization.

AKRIBIS · www.akribis.info · contacto@akribis.info

You can also select the measurement range to optimize the performance of the GMP343 for a certain concentration level. Selecting an appropriate measurement range increases accuracy, since it enables the range-specific compensation and linearization settings. For more information, see sections Setting the Measurement Range on page 40 and Temperature, Pressure, Relative Humidity, and Oxygen Compensations on page 45.

Principle of Operation

The infra-red sensor of GMP343 is based on the proprietary Vaisala CARBOCAP® sensing technology. Here the pulsed light from a miniature filament lamp is reflected and re-focused back to an IR detector which is behind a silicon-based Fabry-Perot Interferometer (FPI). This tiny FPI is tuned electrically so that its measurement wavelength is changed between the absorption band of the CO_2 gas and a reference band.

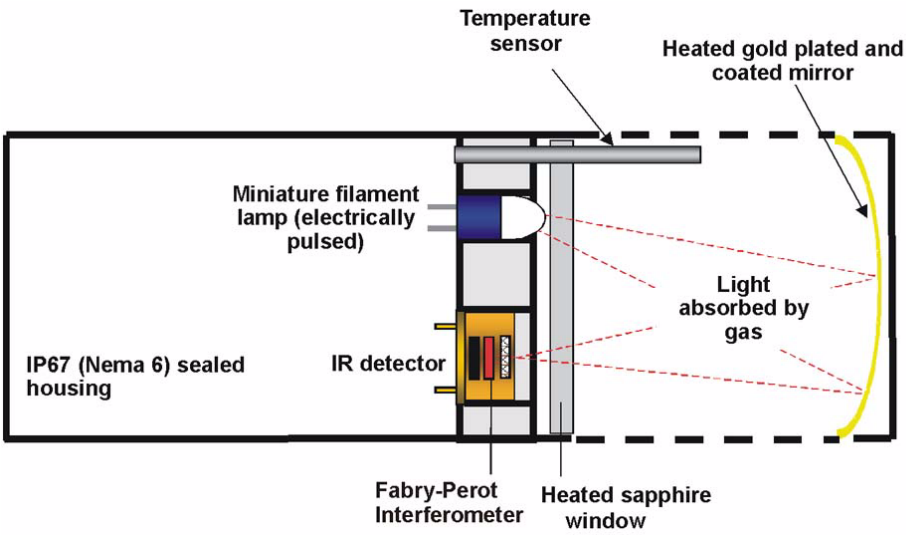

Figure 2 Principle of Operation

When the passband of the FPI coincides with the absorption wavelength of the CO_2 gas, the IR detector sees a decrease in the light transmission. The measurement wavelength of the FPI is then changed to the reference band (that has no absorption lines) and the IR detector sees a full light transmission. The ratio of these two signals indicates the degree of light absorption in the gas and is proportional to the gas concentration. It takes 2 seconds to measure this sequence and to calculate one reading.

Use of numerical filtering reduces the noise of the raw data. On the other hand, the filtering increases the response time of the device (see Figure 9 on page 43).

AKRIBIS · www.akribis.info · contacto@akribis.info

Optics Heating

Two heating elements are placed in the optics; one behind the mirror and one behind the window of the sensor. Heating should always be turned on when there is a risk of dew formation on the optics surface. The heating maintains the surface temperature of the optics a few degrees above the ambient temperature.

The heating is disabled by default. For instructions on how to control the optics heating, refer to section Setting the Optics Heating ON/OFF on page 60.

NOTE	The optics heating is automatically disabled when you connect the GMP343 to a MI70 indicator.

Gas Sampling

There are two GMP343 models available: a flow-through model and a diffusion model.

Diffusion Sampling

No sampling system is needed with the GMP343 diffusion model. The diffusion filter and the plastic filter cover protect the measuring chamber from dirt, water, and contaminants.

In order to have a quick measurement with very short response time the filter can be removed; see section Response time (90 %) on page 77. In this case the optics are openly exposed to contamination and cleaning of optics may be necessary more often. For instructions on cleaning the optics, refer to section Changing the Filter and Cleaning the Optics (Diffusion Model Only) on page 70. Removal of the filter is not recommended if there is a risk of getting water or dirt particles on the optics.

Flow-Through Sampling

The maximum gas flow rate is 10 liters/min. When using high flow rates, please note how the flow rate affects the accuracy, see Specifications Response time (90 %) on page 77 (flow dependence). The volume of the internal measurement chamber is 59 ml ± 1 ml.

The gas sample must not include acidic gases.

AKRIBIS · www.akribis.info · contacto@akribis.info

CAUTION Liquids or acidic vapors may seriously damage the sensor.

Sampling System

The GMP343 flow-through model has no diffusion filter inside the measuring chamber and the optics of the flow-through model cannot be cleaned by the user. Therefore the sample gas must always be filtered and dried before it is pumped to the measuring chamber. A hydrophobic diffusion filter before the inlet of the measuring chamber is needed in order to prevent particles and water from the surroundings from getting into the sensor. The diffusion filter needs to be exchanged often enough to provide a sufficient flow.

In humid environments it is important to avoid water condensation inside the measuring chamber. This can be avoided by drying the sample air. The most common method of drying the sample air is cooling and re-heating the air. A simple system may consist for example of a cooling coil and a water trap which are either cooled or located in a cool environment, followed by a re-heating system. The idea is to get the moisture in the sample to condensate on the walls of the copper tube, trap this water and then lower the relative humidity by heating the sample. If the temperature inside the measurement chamber is essentially higher than the surroundings the cooling coil and the water trap can be simply located outside the chamber. For re-heating, the heat generated by a pumping system may sometimes be adequate, meaning that no additional heater is needed. A simplified schema of a sample system removing particles and moisture is illustrated below.

All sampling system components are commercially available.

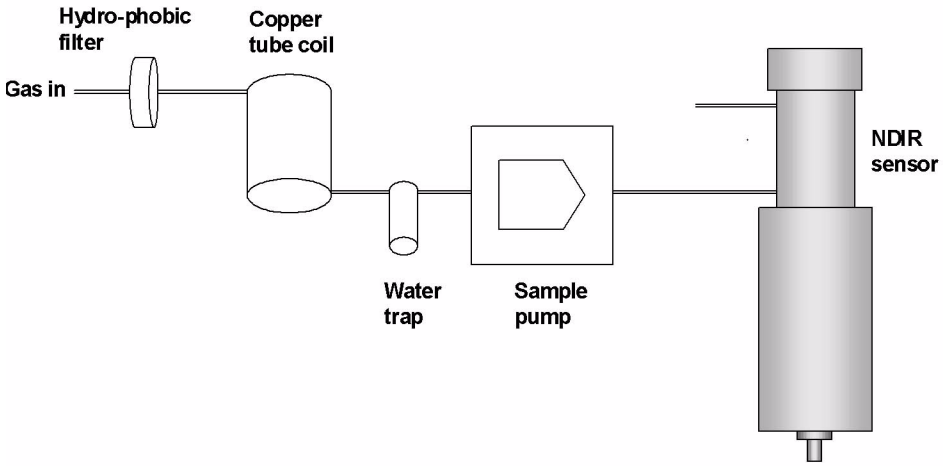

Figure 3 Components of the Sampling System

AKRIBIS · www.akribis.info · contacto@akribis.info

Optional Accessories

Various adapter and filter options are available for the GMP343. For a complete list, see section Spare Parts and Accessories on page 80.

Figure 4 Examples of Optional Accessories

Soil Adapter Kits for In-Soil Applications

The vertical/horizontal soil adapter kit consists of a soil adapter and a hydrophobic sintered PTFE filter. The kits are designed for in-soil CO_2 measurements to be used with the diffusion model of GMP343.

MI70 Indicator Connection

Vaisala MI70 indicator is an optional accessory to be used as a display, communication, and data-logging device for GMP343. When taking measurements the GMP343 is powered via MI70.

The following accessories are included when the MI70 indicator is ordered with the GMP343:

- Rechargeable battery pack.
- AC recharger with Euro, UK, US, and AUS adapters.
- MI70Link software with RS-232 cable (PC <–> MI70).
- 2 m interface cable (GMP343 <–> MI70).

Recharging the Battery Pack

The rechargeable battery pack is located behind the back plate of the indicator. Recharge the battery pack as follows:

AKRIBIS · www.akribis.info · contacto@akribis.info

1. Plug in the recharger connector into the connector on top of the indicator and connect the recharger to a wall socket. A battery symbol in the corner of the display starts to roll.
   - It is not recommended to use MI70 during the first recharging. Later on MI70 can be used while recharging.
   - Duration of recharging depends on the charge level of the battery pack being 4 hours typical. The recommended first recharging time is 6 hours.
2. The battery pack is full when the battery symbol in the display stops rolling.
3. Disconnect the recharger.

Structure of the MI70 Indicator

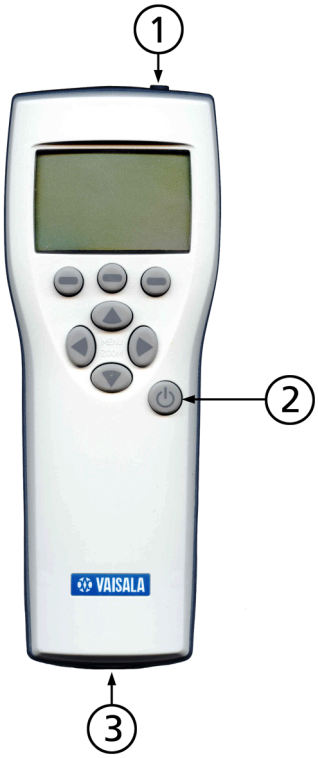

Figure 5 Structure of the MI70 Indicator

The following numbers refer to Figure 4 above:

1 = Recharging connector
2 = Power On/Off key
3 = Connection cable (DRW216050SP) for GMP343 connection

AKRIBIS · www.akribis.info · contacto@akribis.info

Using MI70 as a Display

Introduction of Function Keys and Menu Structure

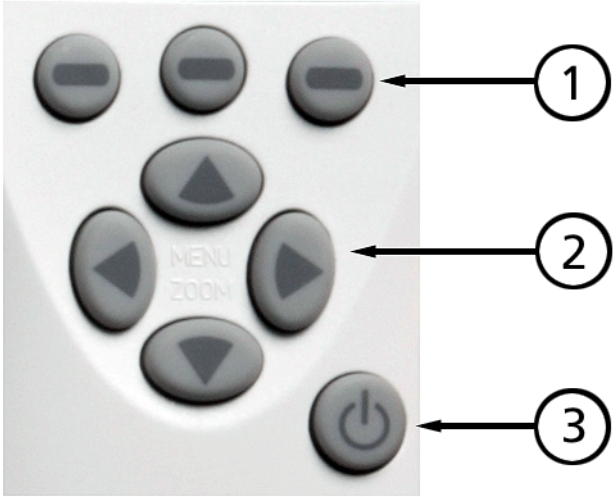

Figure 6 Keyboard of MI70

The following numbers refer to Figure 6 on page 20:

1 = Function keys left/middle/right (can be assigned to shortcuts)
2 = Arrow keys up/down/left/right
3 = Power on/off key

Initialization of MI70

NOTE	The optics heating is automatically disabled when you connect the GMP343 to the MI70 indicator.

1. Install the connection cable between MI70 and GMP343 (GMP343 is powered from MI70).
2. Turn on MI70 by pressing the Power On/Off key.
3. Select the language by using the up/down arrow keys. Confirm by pressing the **SELECT** key.
4. To change the date, select **Date** and press the **SET** key. Set the date by using the up/down/left/right arrow keys. To confirm the date, press the **OK** key.
5. To change the time, select **Time** and press the **SET** key. Set the time by using the up/down/left/right arrow keys. To confirm the time, press the **OK** key.

AKRIBIS · www.akribis.info · contacto@akribis.info

6. To check and change the environment settings, select **YES**. Enter ambient pressure, humidity, and oxygen values. Press the **EXIT** key.

Navigation in Menu

- To turn the indicator on or off, press the Power On/Off key.
- To open the main menu, press any of the arrow keys and then the middlemost function key in sequence.
- To move in a menu and select an option, press the up/down arrow keys. To enter sub-menu of selected option, press the right arrow key. To return to the previous menu level, press the left arrow key.
- To activate a function: press a function key according to the guiding text below the key.
- To return to the basic display directly from any menu levels, press the function key **EXIT**.

The main settings are found in the following menu locations:

- To change language, enter: **Settings - User interface - Language**.
- To select display quantities (carbon dioxide and temperature), enter: **Display - Quantities and units**. The carbon dioxide concentration is shown in **ppm** or in **%**-units and temperature in **°C** or **°F**.
- To set the ambient conditions enter **Environment** menu. The default settings are: 1013 hPa, 50 %RH, and 20.9 %O_2.

Using MI70 in Recording

Record continuous measurement data and view the recorded data by using the MI70. This function is found from the menu **RECORDING/ VIEWING.**

You can switch MI70 off during recording to save battery power. Display message tells you that recording continues undisturbed even when the power is off. If the indicator is switched off during recording, the progress bar is shown on the display every 10 seconds (all the time, if the charger is connected). This bar shows the amount of recorded data.

Save individual measurement data points with **Hold/Save** function (**DISPLAY-HOLD/SAVE DISPLAY**) and view the saved data from the **RECORDING/VIEWING** menu.

CAUTION	Do not disconnect the probe when the data recording is on, even if the indicator is off. This may cause loss of recorded data.

AKRIBIS · www.akribis.info · contacto@akribis.info

Transferring Recorded Data to PC

The recorded data can be transferred to a PC by using MI70 Link program. MI70 Link program can be ordered from Vaisala, see Table 12 on page 80. You can examine the recorded data easily in Windows and transfer it further to a spreadsheet program (such as Microsoft® Excel) for modification.

More information on the data transfer and software features is found in the online help of the MI70 Link program.

AKRIBIS · www.akribis.info · contacto@akribis.info

CHAPTER 3
INSTALLATION

This chapter provides you with information that is intended to help you install this product.

Mounting

A horizontal mounting position is recommended in order to minimize the problems caused by possible condensation.

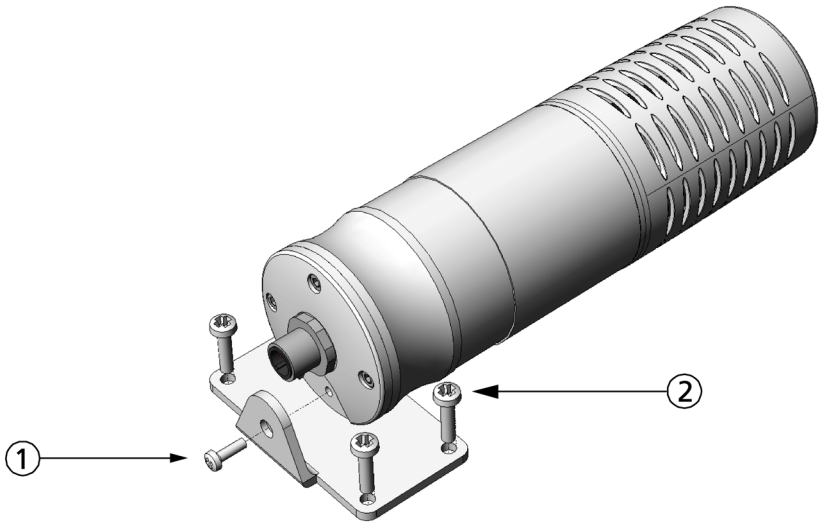

Figure 7 Mounting GMP343

1. Fasten the GMP343 to the mounting bracket by using the screw provided.
2. Mount the mounting bracket with 4 screws (on corners of the plate).

AKRIBIS · www.akribis.info · contacto@akribis.info

Wiring

As it is shipped from the factory, the measurement range and output of the GMP343 are scaled according to the order form completed by the customer. The unit is calibrated at the factory. The device is ready for use when the wiring is done and power is switched on.

GMP343 can be connected to a PC using an optional PC connection cable, see Table 12 on page 80.

For more information on serial commands, see Chapter 4, Operation, on page 27.

WARNING Make sure that the main power is switched off before making any electrical connections.

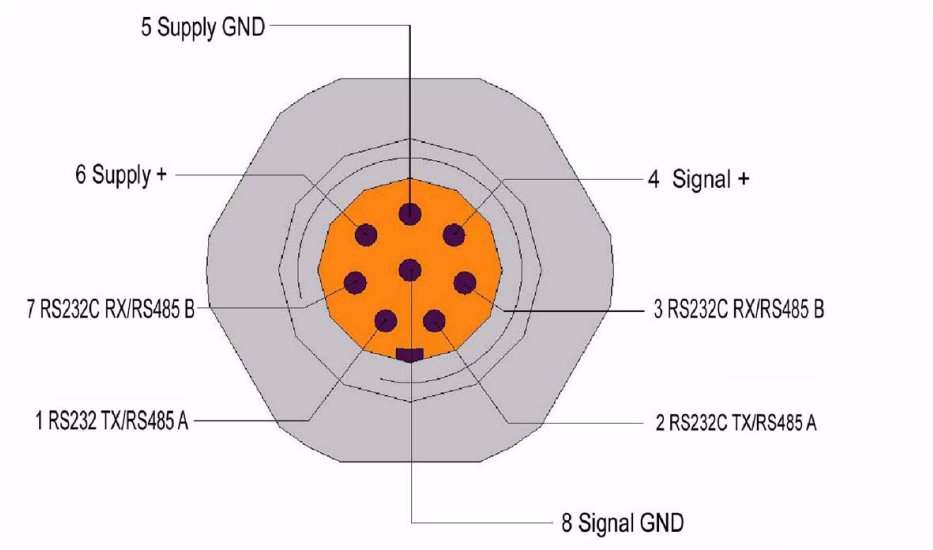

Table 2 Wiring Pins

Pin	Wire	Serial signal (RS-232 or 2-Wire RS-485 interface)		Analog signal
1	White	RS232C: TX	RS485: A(+)	-
2	Brown	RS232C: TX	RS485: A(+)	-
3	Green	RS232C: RX	RS485: B(-)	-
4	Yellow	-	-	Signal +
5	Grey	Supply GND	Supply GND	Supply GND
6	Pink	+11...36 V DC	+11...36 V DC	+11...36 V DC
7	Blue	RS232C: RX	RS485: B(-)	-
8	Shield	-	-	Signal GND

AKRIBIS · www.akribis.info · contacto@akribis.info

There are two pins per signal internally hardwired in parallel (pins 1 and 2, pins 3 and 7). You should connect the RS-232C signal 'TX' (or 2-Wire RS-485 signal 'A') either to the pin 1 or 2 and the RS-232C signal 'RX' (or 2-Wire RS-485 signal 'B') either to the pin 3 or 7.

Note that there is either an RS-232 or a 2-wire RS-485 communication interface available according to initial configuration. However, if the device is configured in RS-485 output mode, the device can still be switched into RS-232 mode by re-configuration via PC. For more information on serial commands and RS-232/485 modes, see Chapter 4, Operation, on page 27.

Wiring of the Junction Box

The optional 8-pole junction box enables practical in-line connection. The box is provided with 8 numbered terminals.

AKRIBIS · www.akribis.info · contacto@akribis.info

CHAPTER 4
OPERATION

This chapter contains information that is needed to operate the GMP343.

Connecting GMP343 to PC

Connection Cables

To connect the GMP343 to a PC, you need the PC Connection Cable (optional accessory 213379). If your PC does not have a serial port, you also need the USB-D9 Serial Connection Cable (optional accessory 219686). By connecting the two cables, you can use a standard type A USB port to connect the GMP343 to a PC.

Both cables are included in the PC Connection Kit that can be ordered with the GMP343.

Installing the Driver for the USB Cable

Before taking the USB cable into use, you must install the provided USB driver on your PC.

1. Check that the USB cable is not connected. Disconnect the cable if you have already connected it.
2. Insert the media that came with the cable, or download the latest driver from www.vaisala.com.
3. Execute the USB driver installation program (setup.exe), and accept the installation defaults. The installation of the driver may take several minutes.

AKRIBIS · www.akribis.info · contacto@akribis.info

4. After the driver has been installed, connect the USB cable to a USB port on your PC. Windows will detect the new device, and use the driver automatically.
5. The installation has reserved a COM port for the cable. Verify the port number, and the status of the cable, using the **Vaisala USB Instrument Finder** program that has been installed in the Windows Start menu. The reserved ports are also visible in the **Ports** section of the Windows Device Manager.

Remember to use the correct port in the settings of your terminal program. Windows will recognize each individual cable as a different device, and reserve a new COM port.

There is no reason to uninstall the driver for normal use. However, if you wish to remove the driver files and all Vaisala USB cable devices, you can do so by uninstalling the entry for **Vaisala USB Instrument Driver** from the **Programs and Features** menu in the Windows Control Panel. In Windows XP and earlier Windows versions the menu is called **Add or Remove Programs**.

Opening a Terminal Connection

The communication interface of GMP343 is RS-232 or RS-485. In case your device is configured to RS-485 communication mode you can still start communication in RS-232 mode (for example when changing the probe setting). See step number 4 in the following instructions.

1. Connect the GMP343 to the PC using the connection cable(s). Refer to section Connection Cables on page 27.
2. Connect the power cables to a 11 ... 36 V power supply.
3. Open a terminal program and set the communication parameters. When using the terminal session for the first time, save the settings for future use.

Table 3 Communication Parameters

Parameter	Value
baud rate	19200
parity	no
data bits	8
stop bits	1
flow control	none

4. Power-up the GMP343. The device should prompt as follows:

```
GMP343 - Version STD 2.0
Copyright: Vaisala Oyj 2003 - 2006
```


AKRIBIS · www.akribis.info · contacto@akribis.info

5. If your device is configured to RS-485 communication mode, switch the device into the service mode by sending a string containing at least 6 capital 'Z' while powering up. The most convenient way using PC is:

   Press and keep pressing **SHIFT** + 'z' while powering up GMP343. Keep pressing **SHIFT** + 'z' until GMP343 starts up in the service mode. The device should prompt as follows:

```
COMM PARAMETERS IN EEPROM:
SMODE : STOP
BAUD RATE: 19200
DATA BITS: 8
PARITY: NONE
STOP BITS: 1
ADDR: 0

HARDWARE CONFIGURATION:
COMM CHANNEL: RS485
ANALOG OUTPUT: VOLTAGE

GMP343 - VERSION STD 2.0
COPYRIGHT: VAISALA OYJ 2003 -2006
>ZZZZZZZZZZZ
```

6. Key in the commands with the keyboard of your computer and press enter. In this guide <**cr**> stands for pressing **ENTER** .

NOTE Responses from the GMP343 are terminated by the following string:

```
[cr][lf]>
```

That is a carriage return character, a line feed, and a right angle bracket.

AKRIBIS · www.akribis.info · contacto@akribis.info

Operation modes of the GMP343

The GMP343 can operate in three different modes:

- RUN mode
- STOP mode
- POLL mode

In the **RUN** mode, the GMP343 sends measurement results at regular intervals. The included parameters and the interval can be set by the user. While in the RUN mode, the device will not answer any other command except the **S** command, which stops the RUN mode and switches the device to STOP mode.

The **STOP** mode is the default mode of operation for the GMP343, where most of the commands listed in this document are available. You can enter the STOP mode from the RUN mode with the S command, or from the POLL mode with the **OPEN**<*addr*> command, where <addr> is the unique address of the GMP343. While in the STOP mode, the GMP343 will respond to all unknown commands with the following string:

```
Unknown command.[cr][lf]>
```

The **POLL** mode is dedicated for bus interfacing. To work in the poll mode, each device must have its own unique address. You can enter the POLL mode by giving the CLOSE command in the STOP mode.

Only a single device can be accessed at a time in the POLL mode. In the POLL mode, you can request a single measumement message from the GMP343 using the **SEND**<*addr*> command. While in the POLL mode, the GMP343 will ignore all unknown commands.

AKRIBIS · www.akribis.info · contacto@akribis.info

Getting the Measurement Message

Measurement Units

GMP343 outputs the following units:

- Carbon dioxide (ppm)
- Temperature (ºC)

For other measurement units (%, non-metric units), use the Vaisala MI70 indicator.

NOTE	The built-in temperature sensor is intended for compensation of the CO_2 measurement. By default the compensation is enabled. For more information, see section Temperature, Pressure, Relative Humidity, and Oxygen Compensations on page 45.

NOTE	Measurement units (ppm and %) express the CO_2 concentration by gas volume.1 % CO_2 = 10 000 ppm CO_2

Starting the Continuous Outputting

R <cr>

This command starts the continuous outputting of results (output form defined with the command **FORM**). Data is printed with the interval defined with the command **INTV**. Printing can be stopped with the command **S**.

```
>r  345.0 ppm
  344.1 ppm
  343.6 ppm
  345.6 ppm
  346.1 ppm
  344.1 ppm
  343.5 ppm
  345.5 ppm
>
```

Stopping the Continuous Outputting

S <cr>

Ends the **RUN** mode; after this command all other commands can be used.

AKRIBIS · www.akribis.info · contacto@akribis.info

Setting the Continuous Outputting Interval

INTV xxxx yyy <cr>

SAVE <cr>

xxxx=output interval (1...1000) default=1 s

yyy=unit (s, min or h)

Example: Output interval is changed to 5 seconds

```
>intv 5 s
INTERVAL        : 5
UNIT            : S
>
```

Outputting the Reading Once

In STOP mode:

SEND <cr>

In POLL mode:

SEND aa <cr>

aa=address of the transmitter when more than one transmitter is connected to a serial bus (0...99).

The output mode can be changed with the command **FORM.**

```
>send
348.7 ppm
>
```

Setting the Serial Interface Measurement Mode

SMODE xxxx <cr>

SAVE <cr>

xxxx= STOP/RUN/POLL

AKRIBIS · www.akribis.info · contacto@akribis.info

In STOP mode: Measurements output only by command, all commands can be used (default mode).

In RUN mode: Outputting automatically, only command **S** can be used.

In POLL mode: Measurements output only with command **SEND**. For more details on POLL mode, see sectionNetworking Operation on page 37.

The settings are not valid until the device is reset.

Setting Communication Hardware

Communication hardware can be chosen between RS-232 or RS-485. Command parameters are correspondingly 232 and 485.

RSMODE <cr>

SAVE <cr>

The setting is not valid until the device is reset.

```
>rs mode
RSMODE : 232? 485

>save
EEPROM saved successfully.
>
```


AKRIBIS · www.akribis.info · contacto@akribis.info

Serial Communication Settings

Save the changed settings by entering the **SAVE** command. The settings are not valid until the device is reset.

SERI <cr>

SAVE <cr>

Baud rate: (300, 600, 1200, 2400, 4800, 9600, 19200, 38400, 57600, 115200)

Note: When baud rate is > 19200 the character spacing must be > 1 ms. If the character spacing is not in use the device may lose some characters.

Data bits: (7/8)

Parity: (none, even, odd)

Stop bits: (1/2)

Key in the settings after the question mark and press **ENTER**.

```
>seri
BAUD RATE      : 19200 ? 19200
DATA BITS      : 8        ? 8
PARITY         : NONE ? none
STOP BITS      : 1        ? 1

>save
EEPROM saved successfully.
>
```


AKRIBIS · www.akribis.info · contacto@akribis.info

Formatting the Measurement Message

Formatting the Message

This command is used to change the serial output format of the commands **SEND** and **R.**

FORM x <cr>

SAVE <cr>

x= format string

Format string consists of quantities and modifiers. You can select one or more of the following quantities by keying in the abbreviation after **FORM** command:

Table 4 Quantities

Abbreviations	Quantities
CO2	Filtered CO_2 results. Factory setting.
CO2RAW	Unfiltered CO_2 results.
CO2RAWUC	Unfiltered CO_2 results. Compensations (P/T/RH/O_2) and corrections (MPC/LC) do not apply.
TIME	Time passed from last reset
ADDR	Transmitter address
ERR	Error flag (0=no error/1=error) in POLL or RUN modes.
T	Measured temperature
P	User-set pressure value
RH	User-set relative humidity value
O	User-set oxygen value

Table 5 Modifiers

Abbreviations	Explations
x.y	length modifier (whole numbers and decimal places)
#t	tabulator
#r	carriage-return
#n	line feed
""	string constant
U5	unit field and length

AKRIBIS · www.akribis.info · contacto@akribis.info

Example 1:

```
>form CO2 " " "ppm" #r#n

>save
EEPROM saved successfully.
>send
336.3 ppm
```

Example 2:

```
>form "Filtered data" CO2 "ppm" #r#n
>save
EEPROM saved successfully
>
>send
Filtered data  336.9ppm
>
```

Example 3 (both filtered and raw data chosen):

```
>form CO2 "ppm" " " CO2RAWUC "ppm" #r#n
>send
 296.5ppm   270.1ppm
```

Setting Time

TIME x <cr>

SAVE <cr>

x=hh:mm:ss

Time passed since the last power on was displayed. Time always resets to 00:00:00 when power is switched off. However, the user can set the time.

Example (time inquiry):

```
>time
04:00:52
>
```

Example (time setting):

```
>time 12:15:00
12:15:00
>time
12:15:02
>
>save
EEPROM saved successfully.
>
```


AKRIBIS · www.akribis.info · contacto@akribis.info

NOTE	Only approximately 1 % accuracy is obtained with the software clock.

Networking Operation

When several transmitters are connected to the same RS-485 bus it is recommended to use separate power supplies for each transmitter. Make sure that the devices are grounded to the same potential. Otherwise harmful ground currents may be generated or RS-485 common-mode limits may be exceeded.

There is no internal termination for the RS-485 bus on the GMP343. For long RS-485 bus lengths proper termination should be provided externally.

Setting the Transmitter Address

ADDR aa <cr>

SAVE <cr>

aa=address (0...99)

Example (changing address from 0 to 1):

```
>addr
ADDR            : 0         ? 1
>
>save
EEPROM saved successfully.
>
```


AKRIBIS · www.akribis.info · contacto@akribis.info

Open and Close

OPEN nn <cr>

nn=address of the transmitter (0...99)

The **OPEN** command sets the bus temporarily in STOP mode so that the SMODE command can be entered.

CLOSE <cr>

In STOP mode: Command **OPEN** has no effect, **CLOSE** sets the transmitter temporarily in POLL mode.

In POLL mode: Command **OPEN** sets the transmitter temporarily in STOP mode.

Example:

```
>close

line closed
GMP343: 1 line opened for operator commands
>send
 351.1 ppm

>smode stop
SMODE : STOP
>
```

Setting Echoing Mode

ECHO x <cr>

SAVE <cr>

x=ON/OFF (default ON)

In RS-232 mode the device echoes everything back to the user. In RS-485 mode echoing is automatically disabled.

AKRIBIS · www.akribis.info · contacto@akribis.info

Preparation for Network Operation

Before GMP343 is connected to the network it must be configured. Normal procedure is shown below:

First connect the device to PC by using RS-232 and when communication is currently open, key in the following commands:

RSMODE 485

ADDR addr

(where addr is 1...99)

SMODE POLL

SAVE

Next turn the power off. Then you can connect the device to RS-485 network.

Commands during Network Operation

When GMP343 is connected to the network, the following commands can be entered:

SEND addr	Return latest CO_2 value
XP addr pressure	Set pressure for compensation
XO addr oxygen	Set oxygen for compensation
XRH addr humidity	Set humidity for compensation
OPEN addr	Open device for normal communication (i.e. to STOP-mode)
CLOSE	Switch the device from STOP-mode to POLL-mode.

Compensation values that are entered with compensation commands (**XP**, **XO**, **XRH**) are used for compensation but they are not stored permanently. Note that compensation commands do not give any reply. If value in command is not acceptable, the command is rejected.

AKRIBIS · www.akribis.info · contacto@akribis.info

Measurement Range, Data Filtering and Linearization

Setting the Measurement Range

The measurement range of the GMP343 has been set at factory according to the order form. However, you can change the measurement range to optimize measurement performance for a certain concentration level.

To achieve the most accurate 'ppm CO_2' measurement, the measurement should be compensated for T, P, %RH, and O_2 concentration in the environment. The compensation settings are specific to the selected measurement range, so selecting a suitable measurement range optimizes the compensation performance. Each range also has its own linearization function; see section Linearization on page 45.

There are 6 measurement ranges available. The range always begins with zero and only upper end value is changed.

RANGE x

SAVE

x = 1...6

Example:

```
>range 4
1. SPAN (ppm) : 1000.00
2. SPAN (ppm) : 2000.00
3. SPAN (ppm) : 3000.00
4. SPAN (ppm) : 4000.00
5. SPAN (ppm) : 5000.00
6. SPAN (ppm) : 20000.00

RANGE : 4
>
>save
EEPROM saved successfully.
```

NOTE	**RANGE**-command only optimizes measurement. The scaling of the analog output is an independent issue. Normally it is necessary to change also **ALOW** and **AHIGH** values. For more information, see sectionSetting and Testing the Analog Outputs on page 52.

AKRIBIS · www.akribis.info · contacto@akribis.info

Measurement Data Filtering

The raw measurement values (measurement interval = 2 seconds) are an input to a chain of three filters: a median, an averaging, and a smoothing filter. The filters can be individually enabled or disabled by setting the filter coefficient to 0 (zero) or by choosing CO_2RAW instead of CO_2 for the measurement output quantity (see **FORM** command).

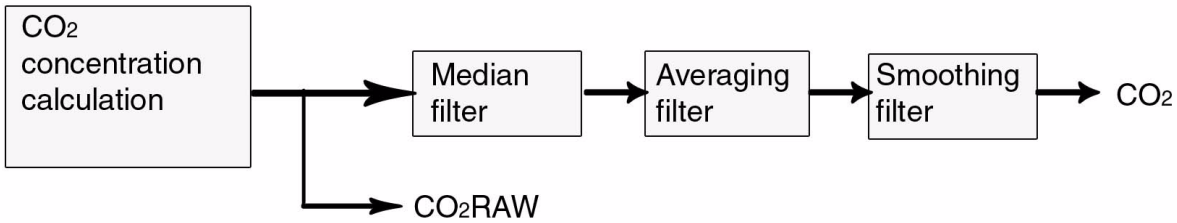

Figure 8 Entering Measurement Values

Median Filter

Median filter is the first section in the filter chain, removing random peak values caused by external interference. The output of the median filter is the moving median of the values over the set number of measurements. The median filter arranges the values in the order of magnitude and outputs the middle value (not the average) if the number of the measurements is odd. In case an even number is set, the output is the average of the two middlemost measurements.

The lowest reasonable set number of measurements is 3. Note that if the noise distribution is somewhat uniform the median filter does not give any additional value.

The number of the measurements is set by the **MEDIAN** command. Maximum number of measurements is 13. The default value is 0 (meaning that the median filter is disabled).

AKRIBIS · www.akribis.info · contacto@akribis.info

Averaging Filter

The averaging filter calculates a moving average over the user-set period of time. The longer the averaging time is the lower the noise at the measurement signal. For example, if the averaging is set to 30 seconds, the most recent average filter output is the average of the last 15 measurements (2 seconds measurement interval).

The averaging time is set by the **AVERAGE** command. The default value is 10 seconds, and the maximum filter length is 60 seconds. For longer averaging times, use the smoothing filter instead. Table 6 on page 42 presents the measurement noise as a function of averaging time at 370 ppm CO_2:

Table 6 Averaging Times

Averaging Time	Noise
0 s	± 3 ppm
10 s	± 2 ppm
30 s	± 1 ppm

Smoothing Filter

The smoothing filter calculates the running average by weighting the most recent measurement by the user-set proportion of the preceding measurement.

By using the smoothing filter, averaging up to even 15 minute periods can be accomplished. The smoothing filter is feasible for the background measurement where fast changes in the CO_2 concentration are not common. See the next section to find the difference between smoothing and averaging in regard to response time.

The smoothing factor is set by the **SMOOTH** command, where the range of the factor is 0 ... 255. The relationship between averaging and smoothing from the noise reducing point of view is like follows:

(SMOOTHING FACTOR × 4) = approx. AVERAGING TIME (s)

The default value is 0 (meaning that the smoothing filter is disabled).

AKRIBIS · www.akribis.info · contacto@akribis.info

How the Filtering Affects the Response Time

The figure on the next page illustrates the difference of the two filters in regard to time response. The averaging time is set to 40 seconds while the smoothing factor is set to 10 to have about equal noise rejection properties. See also the response time tables presented in SpecificationsResponse time (90 %) on page 77.

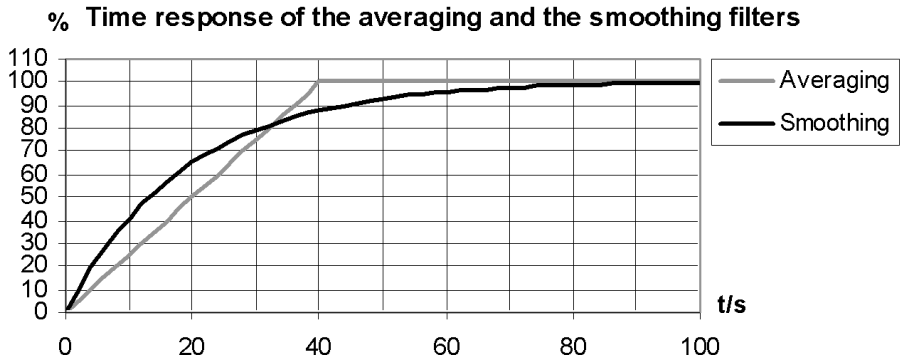

Figure 9 The Difference of the Two Filters in Time Response

Setting the Median Filter

Use the median filter to remove random peak values caused by possible external interference.

MEDIAN x <cr>

SAVE <cr>

x=0...13 (default=0)

```
>median 3
MEDIAN : 3
>save
EEPROM saved successfully (829 ms).
>
```


AKRIBIS · www.akribis.info · contacto@akribis.info

Setting the Averaging Filter

Use the averaging filter to reduce the noise of the measurement. Notice the effect on the response time.

AVERAGE x <cr>

SAVE <cr>

x=0...60 seconds (default =10 s)

```
>average 20
AVERAGING (s) : 20
>save
EEPROM saved successfully (829 ms).
>
```

Setting the Smoothing Filter

Use the smoothing filter to reduce the noise of the measurement for long averaging periods. Notice the effect on the response time.

SMOOTH x <cr>

SAVE <cr>

x=0...255 (default =0)

```
>smooth 10
SMOOTH : 10
>save
EEPROM saved successfully (829 ms).
>
```

Flushing the Filters (Resynchronization)

With this command you can flush the filters to get rid of the effect of the past measurements. This feature is useful if long filtering lengths are used.

RESYNC <cr>

```
>resync
>
```


AKRIBIS · www.akribis.info · contacto@akribis.info

Linearization

Due to the principle of the CO_2 absorption, the sensor of GMP343 produces a signal which is not linear in relation to the CO_2 concentration. However, the output signal is linearized with the internal linearization function. The user can disable the internal linearization function to achieve a signal proportional to the absorption.

Setting the Linearization ON/OFF

LINEAR x <cr>

SAVE <cr>

x=ON or OFF (default=ON)

Example:

```
>linear
LINEAR : ON ?
>
>save
EEPROM saved successfully.

>
```

Temperature, Pressure, Relative Humidity, and Oxygen Compensations

The measurement result of an NDIR CO_2 sensor such as the GMP343 is proportional to the absolute number of CO_2 molecules in the active volume of the sensor. Hence, according to the ideal gas law, the 'ppm CO_2' output is pressure and temperature dependent. Additionally, background gases such as humidity and oxygen have an effect on the absorption strength of CO_2.

The factory calibration of GMP343 is carried out using dry N_2 and CO_2 mixtures. In other words, the relative humidity and the oxygen concentration of the calibration gases are 0 %.

To achieve the most accurate 'ppm CO_2' measurement, the measurement should be compensated for T, P, % RH, and O_2 concentration in the environment. In GMP343 these compensations are a built-in option. The compensated output corresponds to 'ppm CO_2' in the actual environment

AKRIBIS · www.akribis.info · contacto@akribis.info

(T, P, RH, and O_2). The temperature, pressure, relative humidity, and oxygen compensations are enabled as a factory default (default environmental parameters: pressure 1013 hPa, relative humidity 50 % RH, oxygen 20.95 % O_2). The compensation settings are specific to the selected measurement range, so selecting a suitable measurement range also optimizes the compensation performance.

The compensation algorithm of GMP343 eliminates the dependences of the CO_2 measurement, whether they are related to the physics of the measurement or the instrument itself. The temperature compensation of GMP343 is based on built-in temperature sensor while the values of the other environmental parameters should be changed by the user, if they vary from the default.

Note, that from the measurement accuracy point of view, the effect of humidity and oxygen is less significant compared to the effect of temperature and pressure.

Without compensation, the effect of oxygen on the CO_2 reading is approximately - 0.09 % of reading / % O_2. In most circumstances, the oxygen concentration does not vary from the default, so normally there is no need to change the oxygen concentration settings.

Without compensation, the effect of humidity on the CO_2 reading is approximately 0.05 % of reading / g/m^3 H_2O. Since relative humidity is strongly dependent on temperature, the humidity dependence is in terms of absolute humidity, g/m^3 H_2O.

Compensation of each environmental parameter can be disabled/enabled individually by setting the corresponding software parameter 'OFF' or 'ON', or by choosing CO2RAWUC for the measurement quantity (see **FORM** command).

The internal compensation of GMP343 is the most accurate way to compensate for changing environmental parameters. However, if more information is needed on different compensations, please contact your Vaisala representative.

AKRIBIS · www.akribis.info · contacto@akribis.info

Temperature Compensation ON/OFF

The internal temperature sensor is located in the measurement chamber. Temperature compensation is done automatically unless for some reason you want to take the compensation feature off.

To enable or disable temperature compensation, use the commands:

TC x <cr>

SAVE <cr>

x=ON/OFF (default =ON)

```
>tc on
TC : ON
>tc off
TC : OFF
>
>save
EEPROM saved successfully.
>
```

Setting the Oxygen Concentration

To set the oxygen concentration value, use the commands:

O x <cr>

SAVE <cr>

x=0...100 % (default =20.95 %)

```
>o 21
OXYGEN (%): 21.00
>save
EEPROM saved successfully.
>
```


AKRIBIS · www.akribis.info · contacto@akribis.info

Setting Oxygen When the Device Is in POLL-mode

To set oxygen value in POLL-mode, use the following addressable command:

XO addr x <cr>

The device does not reply to the command. If given oxygen value is not within limits, the command is rejected. The given value is written to volatile memory, where it will be overwritten either by next **XO**-command or **O**-command. At start the first compensation value is a value given by **O**-command if it was saved by **SAVE**-command. Purpose of the **XO**-command is continuous update of compensation value sent by another measurement device.

Oxygen Compensation Mode

To enable or disable the oxygen compensation, use the commands:

OC x <cr>

SAVE <cr>

x=ON/OFF (default =ON)

NOTE	Check that the ambient pressure value is correct. The correct pressure value is needed for oxygen compensation even if the pressure compensation is disabled.

```
>oc on
OC: ON
>
>save
EEPROM saved successfully.
>
```


AKRIBIS · www.akribis.info · contacto@akribis.info

Setting the Ambient Pressure (hPa)

The pressure value is needed in pressure, humidity, and oxygen compensations. To set the ambient pressure value, use the commands:

P x <cr>

SAVE <cr>

x=700...1300 hPa (default =1013 hPa)

Sets ambient pressure (hPa) to be used in compensation calculations.

```
>p 1100
PRESSURE (hPa)): 1100.000
>p
PRESSURE (hPa) : 1100.000 ?
>
>save
EEPROM saved successfully.
>
```

Setting Pressure When the Device Is in POLL-mode

To set pressure value in POLL-mode, use the following addressable command:

XP addr x <cr>

The device does not reply to the command. If given pressure value is not within limits, the command is rejected. The given value is written to volatile memory, where it will be overwritten either by next **XP**-command or **P**-command. At start the first compensation value is a value given by **P**-command if it was saved by **SAVE**-command. Purpose of the **XP**-command is continuous update of compensation value sent by another measurement device.

AKRIBIS · www.akribis.info · contacto@akribis.info

Pressure Compensation ON/OFF

To enable or disable the pressure compensation, use the commands:

PC x <cr>

SAVE <cr>

x=ON/OFF (default =ON)

```
>pc off
PC: OFF
>pc on
PC : ON ?
>save
EEPROM saved successfully.
>
```

Setting Ambient Relative Humidity

To set the ambient relative humidity value, use the commands:

RH x <cr>

SAVE <cr>

x=0 ... 100 % RH (default =50 %)

```
>rh
HUMIDITY (%RH): 0.00 ? 24
>save
EEPROM saved successfully.
>
```

Setting Humidity When the Device Is in POLL-mode

To set relative humidity value in POLL-mode, use the following addressable command:

XRH addr x <cr>

The device does not reply to the command. If given humidity value is not within limits, the command is rejected. The given value is written to volatile memory, where it will be overwritten either by next **XRH**-command or **RH**-command. At start the first compensation value is a value given by **RH**-command if it was saved by **SAVE**-command. Purpose of the **XRH**-command is continuous update of compensation value sent by another measurement device.

AKRIBIS · www.akribis.info · contacto@akribis.info

Relative Humidity Compensation ON/OFF

To enable or disable the humidity compensation, use the commands:

RHC x <cr>

SAVE <cr>

x=ON/OFF (default =ON)

NOTE	Check that the ambient pressure value is correct. The correct pressure value is needed for RH compensation even if the pressure compensation is disabled.

```
>rhc on
RHC : ON
>rhc off
RHC : OFF
>
>save
EEPROM saved successfully.
>
```


AKRIBIS · www.akribis.info · contacto@akribis.info

Setting and Testing the Analog Outputs

GMP343 has one analog output channel. The channel outputs either current or voltage signal according to the order configuration. The analog output always gives the filtered CO_2 results regardless of the quantity set with **FORM** command.

Analog Output Hardware

AMODE <cr>

SAVE <cr>

Analog output hardware can be chosen between current or voltage output. Command parameters are correspondingly I (for current) and U (for voltage).

```
>amode
AMODE : I ? U
>
>save
EEPROM saved successfully.
>
```

You can scale the chosen analog output signal as follows:

- When you have current output, you can set any value between 0 ... 4 mA for the current signal low level. The default value is 4 mA (command ILOW). The high value is always 20 mA.
- When you have voltage output, you can set any value between 0 ... 5 for the voltage signal high level (command UHIGH). The low value is always 0 V.

Remember to set the analog output error value within the range of current/ voltage output. See the command **AERR**.

The concentration range of the analog output, corresponding to the signal range set above, can be chosen by determining the low and high values for the measurement range (**AHIGH**, **ALOW**).

AKRIBIS · www.akribis.info · contacto@akribis.info

Setting the Limit of the Current Output Range

You can expand the current output range for example 4...20 mA to 0...20 mA. The range available is 0...4 mA.

ILOW <cr>

SAVE <cr>

Key in the low current value (mA) and press **ENTER**.

```
>ilow
ILOW (mA)      : 4.000   ? 0
>save
EEPROM saved successfully.
>
```

Setting the High Limit of the Voltage Output Range

You can set the hight voltage value: 0...5 V.

UHIGH <cr>

SAVE <cr>

Key in the high voltage value (V) and press **ENTER**.

```
>uhigh
UHIGH (V)      : 5.000    ? 1
>
>save
EEPROM saved successfully.
>
```


AKRIBIS · www.akribis.info · contacto@akribis.info

Setting the High Limit of the Concentration Range

Sets the hight CO_2 concentration value, which corresponds to the analog output high value.

AHIGH <cr>

SAVE <cr>

Key in the highest concentration value (ppm) and press **ENTER**.

```
>ahigh
AHIGH (ppm)    : 1000.0   ? 1200
>
>save
EEPROM saved successfully.
>
```

Setting the Low Limit of the Concentration Range

Sets the low CO_2 concentration value, which corresponds to the analog output low value.

ALOW <cr>

SAVE <cr>

Key in the lowest concentration value (ppm) and press **ENTER**.

```
>alow
ALOW (ppm)     : 0.0      ? 20
>
>save
EEPROM saved successfully.
>
```


AKRIBIS · www.akribis.info · contacto@akribis.info

Setting the Analog Output Overrange Clip

This command clips the analog output signal at the high value when the signal goes over range. In case of the current output the current will not go higher than 20 mA or below the low value current (set with **ILOW**). The voltage output will not go higher than the voltage set with **UHIGH**.

ACUT x <cr>

SAVE <cr>

x=ON/OFF

```
>acut
ACUT            : OFF ? ON
>acut
ACUT            : ON ? OFF
>
>save
EEPROM saved successfully.
>
```

Testing the Analog Output

When you want to test the operation of the analog output use this command to force the output to the set value. The value in the analog output can then be measured with a current/voltage meter. The set value remains valid until you give the **ATEST** command without a value or **RESET** the transmitter.

ATEST <cr>

x=the given test value (mA or V)

```
>atest 1
Test voltage set at 1 V. Use command without any parameters
to stop test mode.
>atest
Voltage test mode stopped.
```


AKRIBIS · www.akribis.info · contacto@akribis.info

Setting the Analog Output Error Level

Factory default states for analog outputs during error condition are the maximum values of the measuring range=2.5 V / 5 V / 20 mA.

AERR x <cr>

SAVE <cr>

x=error value (mA) or (V)

Acceptable ranges: 0...20 mA, 0...6 V

Example:

```
>aerr
AERR (V)        : 5.000    ? 0
>
>save
EEPROM saved successfully.
>
```

NOTE	The error output value must be within a valid range for current (0...20 mA) or voltage output (0...6 V) regardless of the UHIGH setting.

AKRIBIS · www.akribis.info · contacto@akribis.info

Device Information and Other General Commands

Device Information List

This command outputs the information about the device.

? <cr>

This command outputs the information about the device even in POLL-mode.

?? <cr>

```
>??
GMP343 / 2P0.33
SNUM           : Y3040008
CALIBRATION    : 2007-04-20
CAL. INFO      : Vaisala Oyj
SPAN (ppm)     : 4000
PRESSURE (hPa) : 1013.000
HUMIDITY (%RH) : 50.00
OXYGEN (%)     : 20.95
PC             : ON
RHC            : OFF
TC             : ON
OC             : OFF
ADDR           : 0
ECHO           : ON
SERI           : 19200 8 NONE 1
SMODE          : STOP
INTV           : 1 S
```

Show the Output Quantities

Lists the parameter abbreviations to be used in **FORM** command.

CALCS <cr>

```
>calcs
CO2      - Filtered CO2
CO2RAW   - Raw CO2
CO2RAWUC - Uncompensated raw CO2
TIME     - Time since last reset
ADDR     - Device address
ERR      - Error flag
T        - Gas temperature
P        - User-set pressure value
RH       - User-set relative humidity value
O        - User-set oxygen value
```


AKRIBIS · www.akribis.info · contacto@akribis.info

Linear and Multipoint Corrections

Shows the last linear and multipoint correction values.

CORR <cr>

```
>corr
LC              : OFF

Linear correction
   Reading   Reference
      0.00       0.000
   1000.00    1000.000

MPC             : OFF

Multipoint correction
   Reading   Reference
      0.00       0.000
   1000.00    1000.000
>
```

Error Messages

The **ERRS** command shows the error messages received. For a list of possible errors, refer to Table 7 on page 72.

ERRS <cr>

```
>errs
No errors detected.
>errs
ERROR E02: IR source failure.
ERROR E06: Temperature measurement failure (recovered 1 h 9
min ago).
WARNING W01: Watchdog reset.
>
```

The **ERRS R** command resets the error states.

ERRS R <cr>

```
>errs r

OK: No errors detected.
Error states cleared.
```


AKRIBIS · www.akribis.info · contacto@akribis.info

Command List

This command displays a list of all the commands.

HELP <cr>

Showing the Parameters

PARAM <cr>

```
>param
RSMODE          : 232
ADDR            : 0
SERI            : 19200 8 NONE 1
SMODE           : STOP
FORM            : CO2 \r \n
INTV            : 1 S
ECHO            : ON

AMODE           : U
ACUT            : ON
AERR (V)        : 2.50
AHIGH (ppm)     : 3000.00
ALOW (ppm)      : 0.00
ILOW (mA)       : 4.00
UHIGH (V)       : 2.50

RANGE           : 4
MEDIAN          : 0
AVERAGE (s)     : 30
SMOOTH          : 0
LINEAR          : ON
LC              : OFF
MPC             : OFF
HEAT            : OFF

OXYGEN (%)      : 20.95
PRESSURE (hPa)  : 1013.000
HUMIDITY (%RH)  : 50.00
OC              : OFF
PC              : ON
RHC             : OFF
TC              : ON
```

Software Version Information

VERS <cr>

```
>vers
GMP343 / 2P0.33
>
```


AKRIBIS · www.akribis.info · contacto@akribis.info

Memory Handling

Reverting the Factory Parameters

Use this command to revert the original factory settings.

```
>factory
Parameters loaded from Flash.
>
```

Remember to check the settings after using this command.

Saving the Setting

SAVE <cr>

Saves the parameters and settings to EEPROM memory.

Setting the Optics Heating ON/OFF

Enables or disables optics heating.

HEAT <cr>

x=ON or OFF (default =ON)

Example:

```
>heat
HEAT            : ON ? off
>
```

Resetting the Transmitter

RESET <cr>

This command resets the device. If the device is in RUN mode, outputting the results starts immediately after resetting.

AKRIBIS · www.akribis.info · contacto@akribis.info

CHAPTER 5
CALIBRATION AND ADJUSTMENT

This chapter contains information for performing the calibration and adjustment of the GMP343.

In this user's guide the term calibration means comparing the transmitter's reading to a reference concentration. Adjustment, which is usually done after calibration, the reading of the transmitter is changed to correspond to the reference concentration. After adjustment, the original calibration certificate shipped with the product is not valid anymore.

The GMP343 can be sent to Vaisala for calibration, or be calibrated by the user.

Calibration Interval

GMP343 is calibrated as shipped from the factory. The recommended calibration interval is one year. The operating conditions affect the long-term stability. For more information, see sections Operating Conditions on page 79 and Performance on page 75 (long-term stability). In a harsh operating environment it is recommended to check readings more often than in an easy environment.

Factory Calibration and Adjustment

You can send the device to Vaisala Service Center for calibration and adjustment. For more information, see Product Returns on page 73.

AKRIBIS · www.akribis.info · contacto@akribis.info

Calibration and Adjustment by the User

Calibration and adjustment are carried out by using the serial communications and the calibration gas(es).

Additional equipment needed:

- power supply 11...36 VDC
- PC and PC connection cable (Vaisala order code 213379) with optional USB adapter (Vaisala order code 219686)
- calibration gases and tubing
- calibration adapter is required for calibrating the diffusion model (Vaisala order code GMP343ADAPTER)
- pressure regulator and flow meter
- barometer (for measuring ambient pressure)

Calibration (Checking)

The gas concentration of the reference gases must cover the measurement range of the device.

Checking the Compensations

1. Connect GMP343 to a PC and open the terminal program. For more information, see section Connecting GMP343 to PC on page 27.
2. Connect the 24 VDC supply power to GMP343.
3. Compensations must always be enabled during the calibration procedure. Use the **?** command to verify the status of the compensations for ambient pressure, temperature, relative humidity, and oxygen concentration:

   ?<cr>
4. If all compensations are not enabled, make note of the current settings so that you can restore them after the calibration if desired. Then issue the following commands to enable the compensations:

   PC ON<cr>

   TC ON<cr>

   RHC ON<cr>

   OC ON<cr>
5. You must also set the ambient pressure, relative humidity, and oxygen concentration values of the calibration gas correctly. Typically the relative humidity of the calibration gases is 0 % RH. Oxygen

AKRIBIS · www.akribis.info · contacto@akribis.info

concentration of nitrogen mixture gases is usually 0 %. If necessary, adjust the values. For example:

P 1000.3<cr>

RH 0<cr>

O 0<cr>

For more information on compensations, see section Temperature, Pressure, Relative Humidity, and Oxygen Compensations on page 45.

Measurements in Reference Gases

1. If your GMP343 is the diffusion model, remove the filter cover and place the calibration adapter onto the probe.
2. Let the device warm up for 30 minutes to achieve full calibration accuracy.
3. Turn on the calibration mode by giving the command **CALIB ON**. This changes some of the transmitter parameters for the duration of the calibration.

   CALIB ON <cr>
4. Connect the reference gas to the inlet of GMP343 transmitter and let the gas flow for 5 minutes (about 0.5 l / min).
5. To output the measurement result, key in the command **R**. Check that the reading is stabilized and write down the CO_2 reading (ppm). Enter command **S** to stop outputting. For the best calibration result, it is recommended to calculate an average of 20 measurements instead of a single reading.
6. Shut off the reference gas flow and remove the tubings from the gas bottle. When calibrating at several points, connect the other gases to GMP343 similar to the first gas and carry out the measurements as instructed above (steps 6 and 7).
7. After measurements turn off the calibration mode by giving the command **CALIB OFF** (this reverts to the original transmitter settings).

   CALIB OFF <cr>

AKRIBIS · www.akribis.info · contacto@akribis.info

Adjustment in 1...2 Points

First carry out checking the compensations and perform the reference gas measurements as instructed in the previous section, Calibration and Adjustment by the User on page 62. Then continue as follows:

1. Key in the command

   LCI <cr>
2. Key in the **reading** at the reference gas (ppm) and press ENTER (1.Reading?).
3. Key in the **reference** gas concentration (ppm) and press ENTER (Reference?).
4. When making a one-point calibration press ENTER again and go to step 6 in this list. When making a two-point calibration, key in the reading at the **second reference** gas and press ENTER (2.Reading?).
5. Key in the **reference** gas 2 concentration (ppm) and press ENTER (Reference?).
6. Now the correction values are calculated, but the adjustment is not valid until the correction is confirmed.
7. Confirm the new correction values with the command

   LC ON <cr>
8. Use the command **R** to check with both reference gases that the correction has taken place and the readings are ok.
9. Save the settings:

   SAVE <cr>

   Saves parameters and settings to EEPROM memory.

AKRIBIS · www.akribis.info · contacto@akribis.info

Adjustment in 3...8 Points

First carry out checking the compensations and perform the reference gas measurements as instructed in the previous section, Calibration and Adjustment by the User on page 62. Then continue as follows:

1. Feed the readings (Reading?) and the corresponding concentrations (Reference?) with the command

   MPCI <cr>
2. Confirm the adjustment and the new correction values with the command

   MPC ON <cr>
3. Save the settings with the command

   SAVE <cr>

   Saves parameters and settings to EEPROM-memory.

Example of the 2-Point Adjustment Procedure

The following section presents an example of the 2-point adjustment procedure with reference gas concentrations of 0 ppm and 1007 ppm.

NOTE	Use the actual concentrations given usually in the side of the gas bottle. For example, a gas with a nominal 1000 ppm CO_2 concentration might actually contain 1007 ppm CO_2.

1. First turn on the calibration mode for measuring reference gases.

```
>
>calib on
Calibration mode started.
Use CALIB OFF to stop the mode.
```

2. The GMP is now measuring the first reference gas (0 ppm). Use command **R** and let the reading stabilize for several minutes. Calculate the average reading (reading 1).

```
>r
...28.2
28.2
28.1
28.1
28.2
```


AKRIBIS · www.akribis.info · contacto@akribis.info

3. The GMP343 is now measuring the second reference gas (1007 ppm). Use command R and let the reading stabilize for several minutes. Calculate the average reading (reading 2).

```
>
>r
1067.1
1066.8
1067.2
1066.7
1066.6
```

4. Turn off the calibration mode with command **CALIB OFF**.

```
>calib off
Calibration mode stopped.
```

5. Next feed the readings: use command **LCI** to feed the first and second reference gas readings (28 ppm and 1066 ppm), and the corrected values (= the concentrations of the reference gases, 0 ppm and 1007 ppm).

```
>lci
Reading Reference
   0.00     0.000
1000.00  1000.000
NOTE: Entering new correction
values all previous correction points!
Abort without losing correction points
by using ESC.
1. Reading ? 28
   Reference ? 0
2. Reading? 1066
   Reference? 1007
```

6. Confirm the adjustment with command **LC ON**.

```
>lc
LC : OFF ? on
```

7. Check the reading with the second reference gas, 1007 ppm.

```
>r
1005.4
1006.2
1007.1
1007.1
```


AKRIBIS · www.akribis.info · contacto@akribis.info

8. Check the reading with the first reference gas, 0 ppm.

```
>r
0.2
0.1
-0.1
-0.1
-0.0
-0.2
```

9. Save the settings.

```
save>
EEPROM saved successfully.
>
```

NOTE	You can revert the GMP343 back to factory settings with the command **FACTORY**.

AKRIBIS · www.akribis.info · contacto@akribis.info

AKRIBIS · www.akribis.info · contacto@akribis.info

CHAPTER 6

MAINTENANCE

This chapter instructs in the basic maintenance of the GMP343.

Cleaning the Probe Housing

You can clean the probe housing wiping with a moist cloth. Note the following precautions when cleaning:

- Do not immerse the GMP343 in liquid to clean it.
- Do not attempt to clean the optical surfaces except as described in section Changing the Filter and Cleaning the Optics (Diffusion Model Only) on page 70. The optical surfaces of the flow-through model should only be cleaned by a Vaisala service center.

AKRIBIS · www.akribis.info · contacto@akribis.info

Changing the Filter and Cleaning the Optics (Diffusion Model Only)

The optics of the diffusion model are well protected by the filter, and it can tolerate some dirt on the optics as the measurement is compensated for the reduction of signal. For this reason, there is typically no reason to perform any cleaning actions even if the probe appears slightly dirty on the outside.

If the filter is very contaminated, or if the probe gives the error code **E07 Measurement signal level too low**, follow the procedure below to change the filter, and if necessary, clean the optical surfaces. A new standard diffusion filter and filter cover can be ordered from Vaisala (order code GMP343FILTER).

CAUTION	Do not clean the optical surfaces in any other manner. If further cleaning is required to restore error-free measurement, contact Vaisala Service.

NOTE	Handle the diffusion filter carefully to prevent contaminants or mechanical stress from damaging the filtering surface.

1. Rotate and remove the filter cover.
2. Take a firm hold on the frame of the diffusion filter, and pull it out. Note that the threads for the filter cover are sharp.

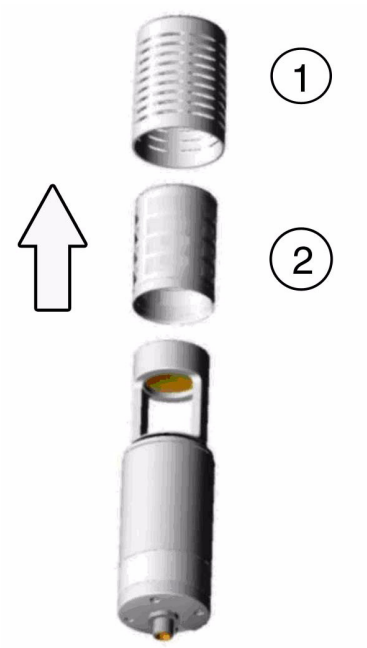

Figure 10 Opening the Diffusion Filter

AKRIBIS · www.akribis.info · contacto@akribis.info

3. Blow on the mirror and window area with clean instrument air to remove any loose particles.

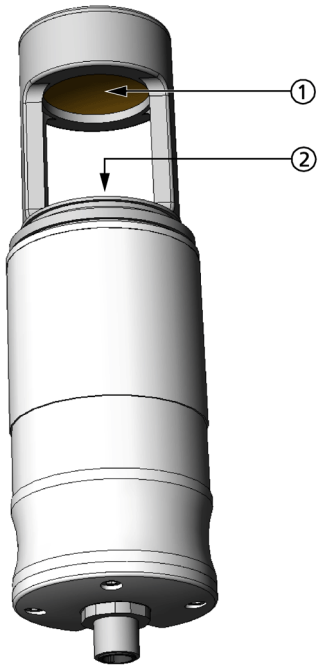

Figure 11 Optics

The following numbers refer to Figure 11 on page 71:

1 = Mirror

2 = Window

4. If the mirror and/or window seem dirty, perform the following steps:

CAUTION	Do not rub or wipe the optical surfaces, as that may scratch or otherwise damage them.

   a. Pour some pure ethanol or isopropyl alcohol on the window and swish it around to clean the dirt. Pour out the liquid when done.
   b. Clean the mirror in the same manner.
   c. Let the surfaces dry before continuing with the next step.

5. Replace the diffusion filter. Push the end of the filter gently to snap it into place.
6. Replace the filter cover.

AKRIBIS · www.akribis.info · contacto@akribis.info

Error States

In case of an error function the outputs are as follows:

- Serial line: In **STOP** mode the error code and description (see the Table 6 below) is shown when keying in the command: **ERRS**. In POLL or RUN mode the error flag is set to 1 (if the error flag is included in the message format, see **FORM**-command). Reset the error state with a command **ERRS R**.
- Analog output shows the error level (can be set by using the **AERR**-command. Factory setting: 5 V or 20 mA).

Table 7 Troubleshooting Errors

Error code	Error description	Interpretation	Action
E01	EEPROM checksum failure	Internal transmitter failure	Return the device to Vaisala Service
E02	IR source failure	Internal transmitter failure	Return the device to Vaisala Service.
E03	FPI failure	Internal transmitter failure	Return the device to Vaisala Service.
E04, E05	Heater failure	Internal transmitter failure	Return the device to Vaisala Service.
E06	Temperature measurement failure	Operation temperature is out of allowed range. Analog output: Error level is shown if temperature compensation is enabled. Otherwise, output is normal.	Ensure that the operating temperature is -45...+85 °C (-49...185 °F). In case of constant error, return the device to Vaisala Service.
E07	Measurement signal level too low	Measurement chamber is contamined or the lamp is degraded.	Change the filter and clean the optics according to the instructions in section Changing the Filter and Cleaning the Optics (Diffusion Model Only) on page 70. In case of constant error, return the device to Vaisala Service.
W01	Watchdog reset occured	Software defect	In case this warning appears frequently, return the device to Vaisala Service.
W02	Stack overflow	Software defect	In case this warning appears frequently, return the device to Vaisala Service.

AKRIBIS · www.akribis.info · contacto@akribis.info

In all error cases first check that the probe is connected properly, then reset the transmitter by disconnecting it. In case of constant error, please contact Vaisala technical support. See section Technical Support on page 73.

CAUTION	Please note that there are no user-serviceable parts inside the GMP343 transmitter body. The back flange shall not be opened except by authorized Vaisala service personnel.

Technical Support

For technical questions, contact the Vaisala technical support by e-mail at helpdesk@vaisala.com. Provide at least the following supporting information:

- Name and model of the product in question.
- Serial number of the product.
- Name and location of the installation site.
- Name and contact information of a technically competent person who can provide further information on the problem.

Product Returns

If the product must be returned for service, see www.vaisala.com/returns.

For contact information of Vaisala Service Centers, see www.vaisala.com/servicecenters.

AKRIBIS · www.akribis.info · contacto@akribis.info

AKRIBIS · www.akribis.info · contacto@akribis.info

CHAPTER 7

TECHNICAL DATA

This chapter provides the technical data of the GMP343.

Performance

Sensor	Vaisala CARBOCAP®
Measuring principle	Single-Beam Dual-Wavelength NDIR
Measurement range options	0 ... 1000 ppm 0 ... 2000 ppm 0 ... 3000 ppm 0 ... 4000 ppm 0 ... 5000 ppm 0 ... 2 %

Accuracy (excluding noise) at 25 °C and 1013 hPa after factory calibration with 0.5 % accurate gases with different range options

0 ... 1000 ppm	±(3 ppm CO_2 + 1 % of reading)
0 ... 2000 ppm - 0 ... 2 %*	±(5 ppm CO_2 + 2 % of reading)

* Accuracy below 200 ppm CO_2 not specified for the 2 % range option

Noise (repeatability) at 370 ppm CO_2

with no output averaging	±3 ppm CO_2
with 30 s output averaging	±1 ppm CO_2

Short-term stability (up to 6 hours) at 370 ppm CO_2 ±1 ppm CO_2

Long-term stability

In easy operating conditions	±2 % of reading */ year
In moderate oper. conditions	±2 % of reading */ 6 months
In harsh operating conditions	±2 % of reading */ 3 months

* Always at least ±10 ppm CO_2

See Figure 12 on page 79.

AKRIBIS · www.akribis.info · contacto@akribis.info

Effects of Temperature, Pressure, Relative Humidity, and Oxygen

The temperature compensation of GMP343 is based on the built-in Pt1000 temperature sensor. The values of pressure, relative humidity, and oxygen must be input by the user, if they vary from the default.

Temperature

Table 8 Effect of Temperature on Accuracy with Temperature Compensation

CO_2 range options	0 ... 1000 ppm	0 ... 2000 - 5000 ppm	0 ... 2 %
Temperature °C (°F)	Accuracy (% of reading)*		
+10 ... +40 (+50 ... +104)	±1	±1	±2
+40 ... +60 (+104 ... +140)	±2	±3	±4
-40 ... +10 (-40 ... +50)	±3	±3	±5

* Always at least ±10 ppm CO_2.

Temperature compensation is performed by an integrated Pt1000 element.

The specifications in the table above are valid when temperature change is < 1 °C / min. If optics heating is in use, the > 500 ppm accuracy values should be multiplied by a factor of 2.

Effect on accuracy **without** compensation (typ.): -0.35 % of reading / °C

Pressure

NOTE Integrated pressure sensor is not included in GMP343.

Table 9 Effect of Pressure on Accuracy with Pressure Compensation

CO_2 range option	0 ... 1000 ppm	0 ... 2000 ppm - 2 %
Pressure (hPa)	Accuracy (% of reading)	
900 ... 1050	±0.5	±1
700 ... 1300	±1	±2

Effect on accuracy **without** compensation (typ.): +0.15 % of reading /hPa

AKRIBIS · www.akribis.info · contacto@akribis.info

Humidity

Effect on accuracy **with** humidity compensation:

±0.006 % of reading / g/m^3 H_2O below 1000 ppm CO_2

±0.02 % of reading / g/m^3 H_2O above 1000 ppm CO_2

The values above only apply in normal ambient pressure.
Effect on accuracy **without** humidity compensation (typ.):

+0.05 % of reading / g/m^3 H_2O

For more information on operating humidity range, see Figure 12 on page 79.

Oxygen

Effect on accuracy **with** oxygen compensation at 20.9 %O_2:

±0.2 % of reading

Effect on accuracy **without** oxygen compensation (typ.):

-0.09 % of reading / %O_2

Response time (90 %)

Table 10 Diffusion Model

Filter attached	Averaging (s)	Response (s)
Yes	0	75
Yes	10	80
Yes	30	82
No	0	<2
No	10	12
No	30	30

Table 11 Flow-through Model

Gas flow (l/min)	Averaging (s)	Response (s)
0.3	0	26
0.3	10	34
0.3	30	44
1.2	0	8
1.2	10	15
1.2	30	23

AKRIBIS · www.akribis.info · contacto@akribis.info

Flow dependence of flow-through model		0.3 % of reading / 1 / min
Warm-up time		
	full accuracy ±0.5 %	10 min
	full accuracy	30 min

Inputs and Outputs

Operation voltage		11 ... 36 VDC
Power consumption		
	without optics heating	<1 W
	with optics heating	<3.5 W
Analog outputs		
Current output	range	4 ... 20 mA
	resolution	14 bits
	max load	800 Ω @ 24 VDC 150 Ω @ 10 VDC
Voltage output	range	0 ... 2.5 V, 0 ... 5 V
	resolution	14 bits (13 bits with 0...2.5 V)
	min. load	5 kΩ
Temperature dependence of the analog outputs		±0.005 % of reading / °C
Digital outputs		RS-485 (two-wire) RS-232

AKRIBIS · www.akribis.info · contacto@akribis.info

Operating Conditions

The GMP343 operating conditions in terms of temperature (T) and relative humidity (RH) are illustrated in the following graph:

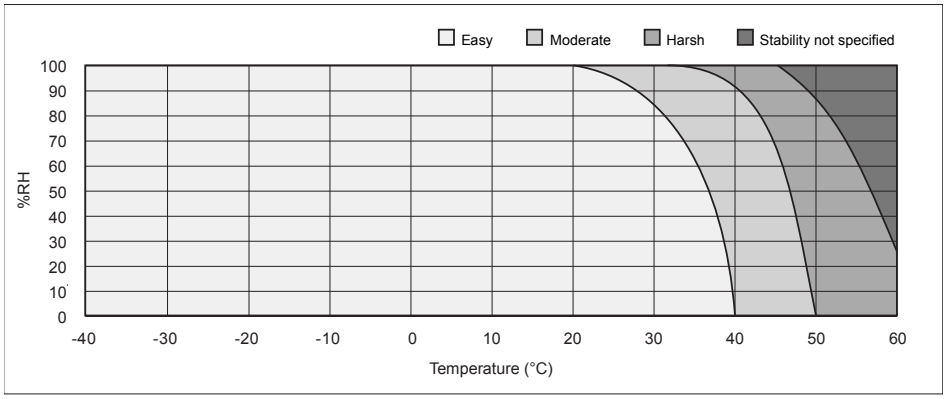

Figure 12 GMP343 Operating Conditions

Temperature	operating storage	-40 ... +60 °C (-40 ... +140 °F) -40 ... +70 °C (-40 ... +158 °F)
Humidity		See Figure 12 on page 79.
Pressure	compensated range	700 ... 1300 hPa
	operating	<5 bar
Oxygen		0 ... 100 %O_2
Gas flow rate for flow-through model		0 ... 10 liters / min
Internal volume of the measurement chamber of flow-through model		59 ml ±1 ml
Electromagnetic compatibility		EN61326-1, Generic Environment

AKRIBIS · www.akribis.info · contacto@akribis.info

Materials

Housing	Anodized aluminium
Filter cover	PC
IP classification	
Housing (cable attached)	IP67
Diffusion filter (weather protection)	IP65
Diffusion filter (sintered PTFE)	IP66
Cable connector type	8-pin M12
Weight (probe only)	360 g

Spare Parts and Accessories

Table 12 List of Spare Parts and Accessories

Description	Order code
Wall mounting bracket	GMP343BRACKET
Mounting flange	GMP343FLANGE
Standard diffusion filter (weather protection, IP65) + filter cover	GMP343FILTER
Diffusion filter (sintered PTFE filter, IP66) + filter cover	215521
Calibration adapter (for the diffusion model)	GMP343ADAPTER
Junction box	JUNCTIONBOX-8
Probe cable with M12 female connector, 2 m	GMP343Z200SP
Probe cable with M12 female connector, 6 m	GMP343Z600SP
Probe cable with M12 female connector, 10 m	GMP343Z1000SP
PC connection cable, 2 m	213379
USB adapter (USB-D9 serial connection cable)	219686
Interface cable for MI70, 2 m	DRW216050SP
Soil adapter kit for horizontal positioning (includes sintered PTFE filter)	215519
Soil adapter kit for vertical positioning (includes sintered PTFE filter)	215520

AKRIBIS · www.akribis.info · contacto@akribis.info

APPENDIX A
DIMENSIONS

This appendix contains the dimension drawings for the GMP343.

AKRIBIS · www.akribis.info · contacto@akribis.info

GMP343 (Flow-through)

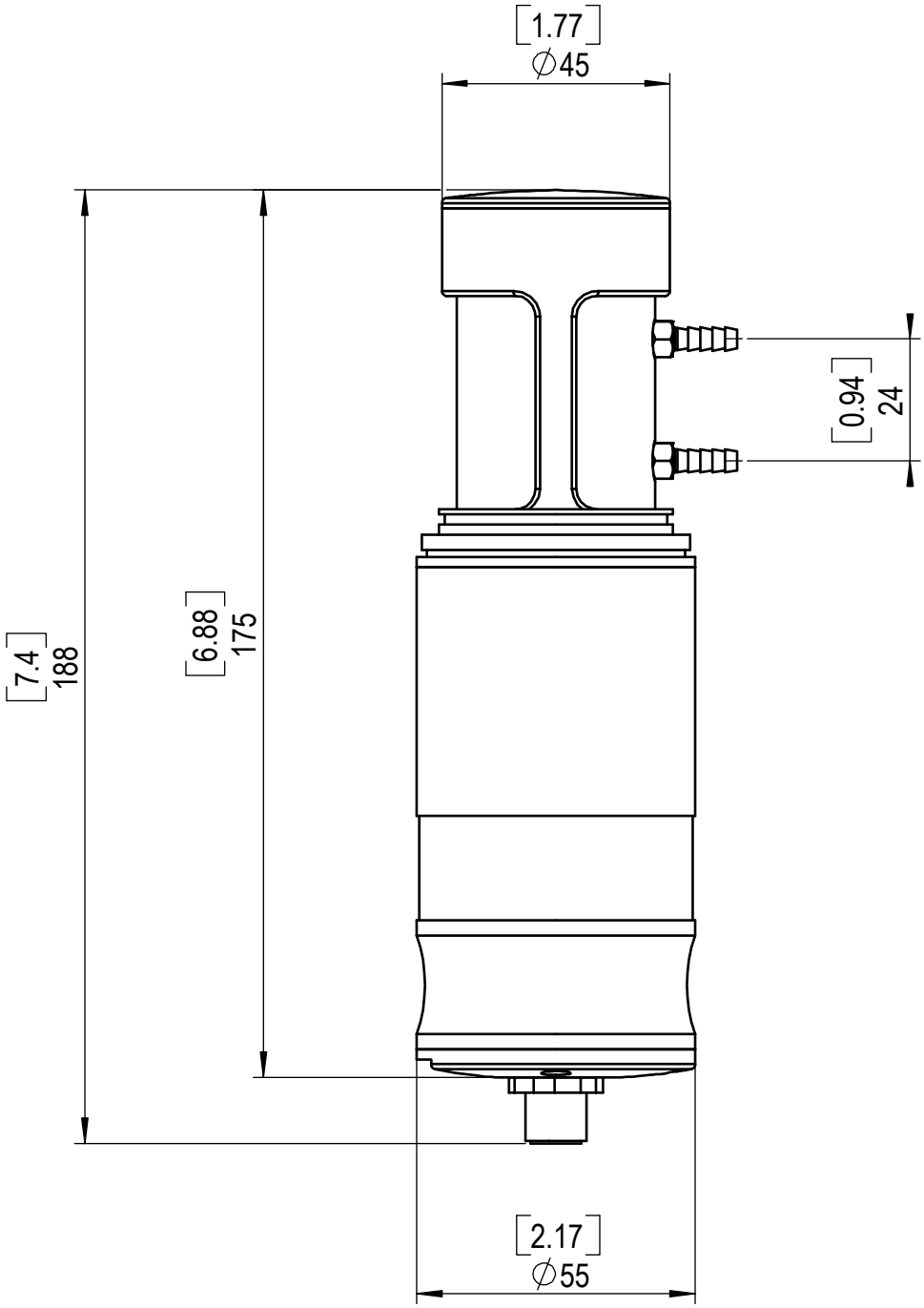

AKRIBIS · www.akribis.info · contacto@akribis.info

GMP343 (Diffusion)

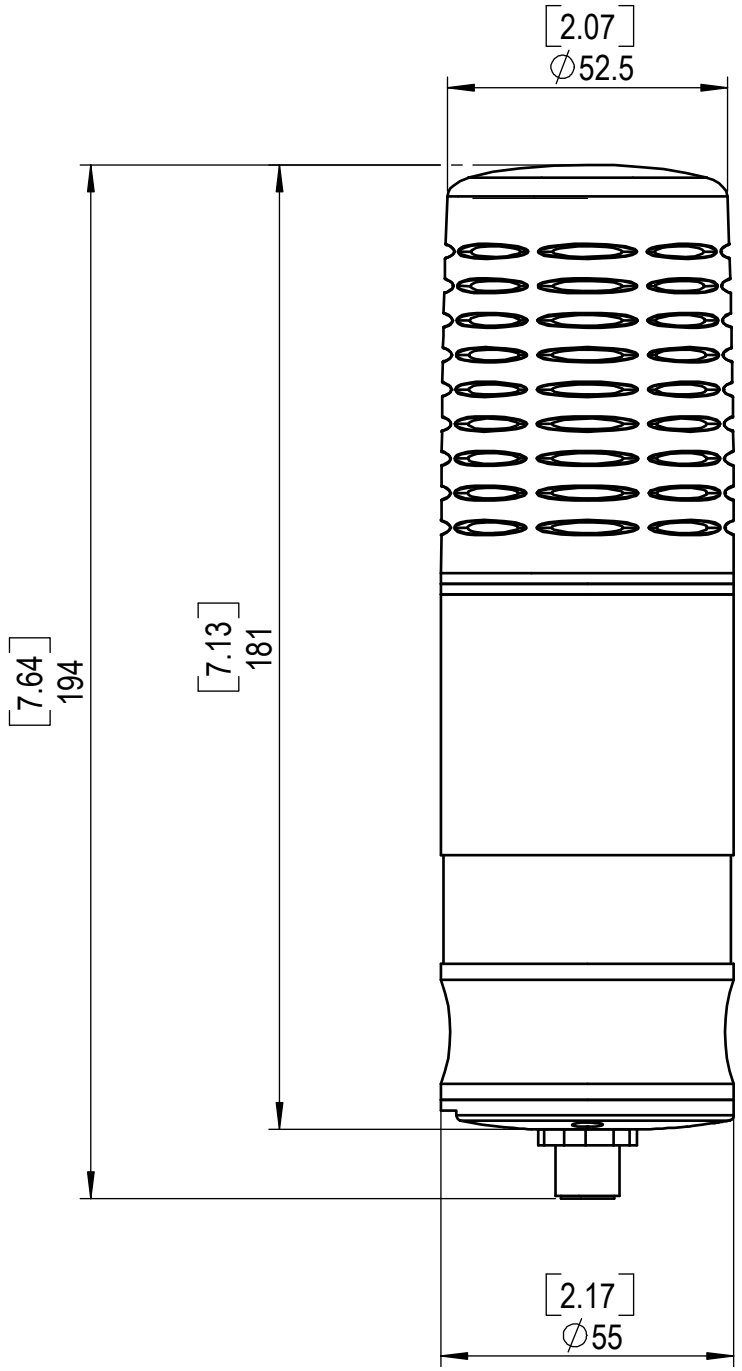

AKRIBIS · www.akribis.info · contacto@akribis.info

Calibration Cap

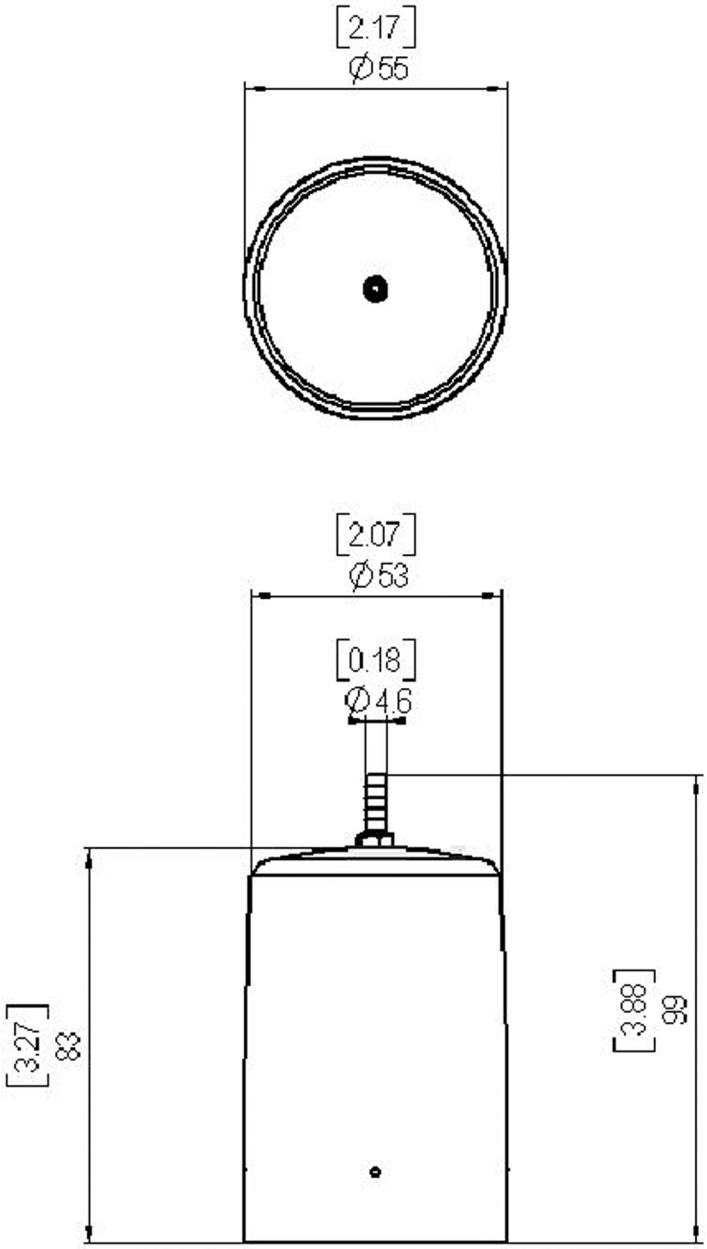

AKRIBIS · www.akribis.info · contacto@akribis.info

Mounting Flange

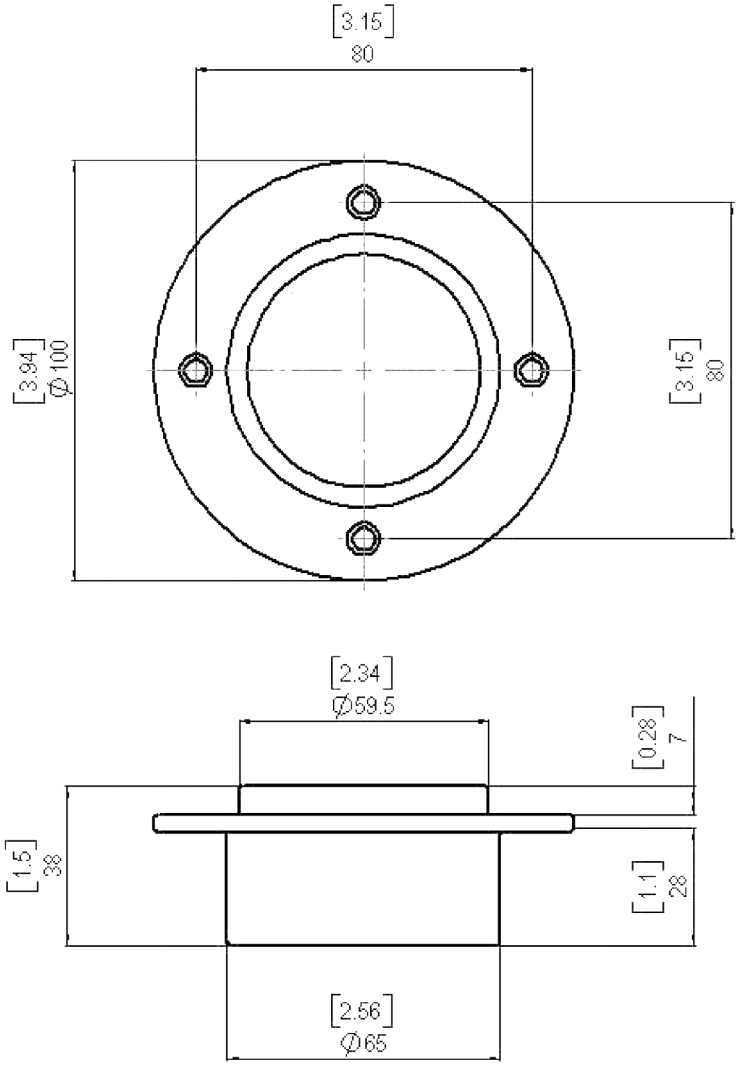

AKRIBIS · www.akribis.info · contacto@akribis.info

Junction Box

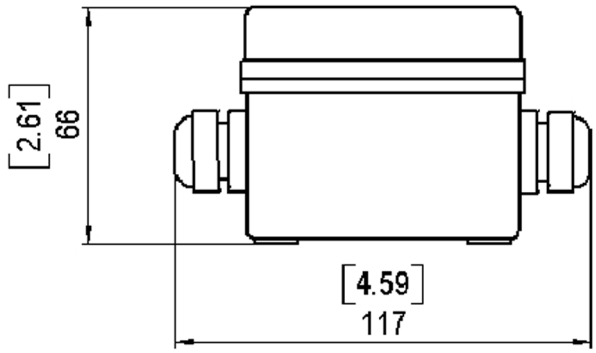

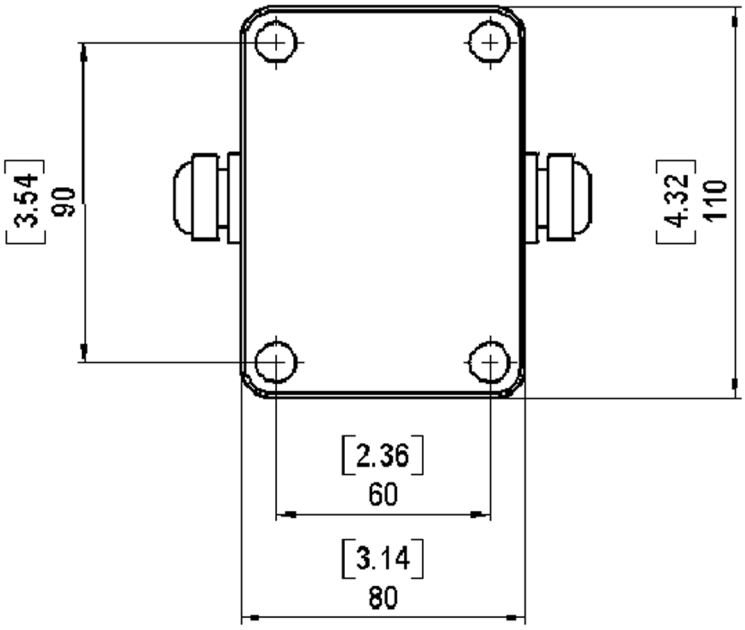

AKRIBIS · www.akribis.info · contacto@akribis.info

Mounting Bracket

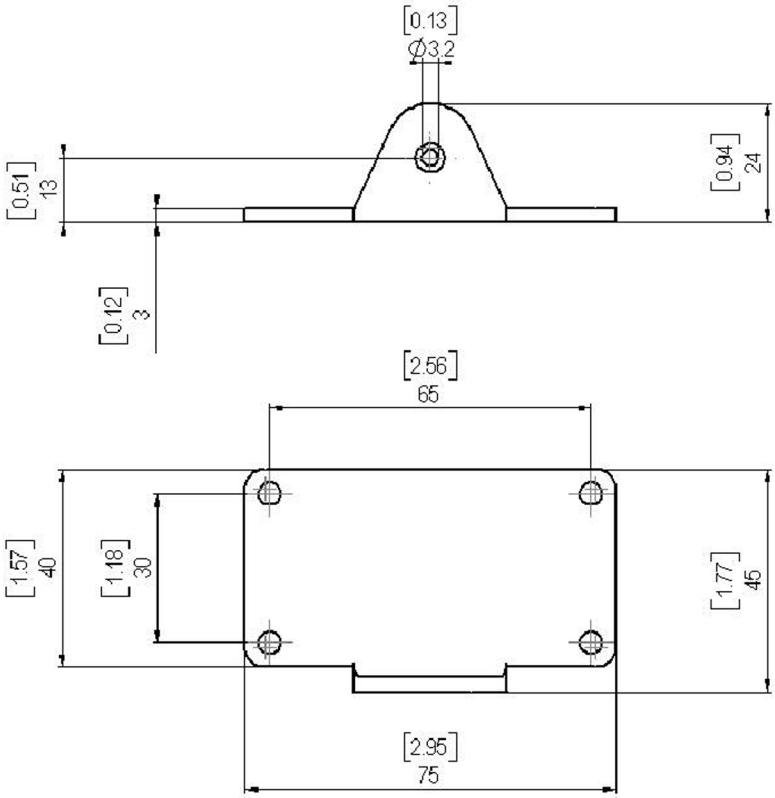

AKRIBIS · www.akribis.info · contacto@akribis.info

AKRIBIS · www.akribis.info · contacto@akribis.info

APPENDIX B
LIST OF COMMANDS

This appendix lists the serial commands of the GMP343.

Measurement Commands

The bold text in the brackets is a default setting. Key in the commands with the keyboard of your computer and press enter. In this guide, <cr> stands for pressing **ENTER**.

R	Start the continuous output
S	Stop the continuous output
ECHO	Turn the serial interface echo ON/OFF
INTV	Set the continuous output interval
SEND	Output the reading once
SMODE	Set the serial interface
SERI	Serial line settings (default 19200 8 NONE) baud: 300 ... 115200
ADDR	Set the device address
CLOSE	Close the line to POLL mode
OPEN	Open temporarily connection to the POLL-mode device
FORM	Set the output format of **SEND** and **R** commands
RSMODE	Set the output hardware to use either RS-232 or RS-485

AKRIBIS · www.akribis.info · contacto@akribis.info

Filtering Commands

AVERAGE	Set the averaging filter
SMOOTH	Set the smoothing filter
MEDIAN	Set the median filter
RESYNC	Flush (clear) all the filters

P, T and RH Compensation Commands

P	Set local pressure (hPa) for compensation
PC	Pressure compensation mode
RH	Set local humidity (% RH) for compensation
RHC	Humidity compensation mode
TC	Temperature compensation mode
O	Set the oxygen for compensation
OC	Oxygen compensation mode
XP	Set local pressure (hPa) for compensation (POLL-mode)
XO	Set oxygen for compensation (POLL-mode)
XRH	Set local humidity (% RH) for compensation (POLL-mode)

Device Handling Commands

RESET	Reset device
FACTORY	Revert the factory parameters
SAVE	Save parameters to EEPROM

Device Information Display Commands

?	Output the information about the device
??	Output the information about the device in POLL-state
CALCS	Display measured parameters
CORR	Display linear and multipoint corrections
ERRS	List the error messages
HELP	List the commands on the current level

AKRIBIS · www.akribis.info · contacto@akribis.info

PARAM	Display parameters
TIME	Display or set time since reboot
VERS	Display the SW version information

Calibration Commands

CALIB ON	Turn on the calibration mode
CALIB OFF	Turn off the calibration mode
LC	Linear correction mode
LCI	Enter linear correction
MPC	Multipoint correction mode
MPCI	Enter multipoint correction

Setting and Testing the Analog Outputs

AMODE	Set analog output HW (current or voltage mode)
AHIGH	Analog output high concentration value
ALOW	Analog output low concentration value
ACUT	Analog output over range cut
ILOW	Analog output low current value
UHIGH	Analog output high voltage value
AERR	Change the analog error output value
ATEST	Test the analog outputs

Advanced Measurement Commands

LINEAR	Set linearization ON/OFF
HEAT	Set optics heating ON/OFF
RANGE	Set measurement range to optimize performance

AKRIBIS · www.akribis.info · contacto@akribis.info

AKRIBIS · www.akribis.info · contacto@akribis.info

www.vaisala.com

AKRIBIS · www.akribis.info · contacto@akribis.info

M210514EN