USER GUIDE

GMP252

Vaisala · Authorized Partner

Distributed by AKRIBIS

M211897EN-F

User Guide

Vaisala CARBOCAP® Carbon Dioxide Probe

GMP252

VAISALA

AKRIBIS · www.akribis.info · contacto@akribis.info

PUBLISHED BY

Vaisala Oyj
Vanha Nurmijärventie 21, FI-01670 Vantaa, Finland
P.O. Box 26, FI-00421 Helsinki, Finland
+358 9 8949 1
vaisala.com
docs.vaisala.com

© Vaisala 2026

No part of this document may be reproduced, published, or publicly displayed in any form or by any means, electronic or mechanical (including photocopying), nor may its contents be modified, translated, adapted, sold, or disclosed to a third party without prior written permission of the copyright holder. Translated document and translated portions of the document are based on the original English version. Parts of the translation may have been created using machine-assisted translation. In ambiguous cases, the English version is applicable, not the translation.

The contents of this document are subject to change without prior notice.

Local rules and regulations applicable to the products and services may vary, and they shall take precedence over the information contained in this document. Vaisala makes no representations on this document's compliance with the local rules and regulations applicable at any given time, and hereby disclaims any and all responsibilities related thereto. You are instructed to confirm the applicability of the local rules and regulations and their effect on the intended use of the products and services.

This document does not create any legally binding obligations for Vaisala towards customers or end users. All legally binding obligations are set forth exclusively in the applicable contract or in the relevant set of General Conditions of Vaisala (vaisala.com/policies).

This product contains software developed by Vaisala or third parties. Use of the software is governed by license terms and conditions included in the applicable contract or, in the absence of separate license terms and conditions, by the General License Conditions of Vaisala Group.

Table of contents

1. About this document ... 11
1.1 Version information ... 11
1.2 Related manuals ... 12
1.3 Documentation conventions ... 13
1.4 Trademarks ... 14

2. Product overview ... 15
2.1 Introduction to GMP252 ... 15
2.2 Basic features and options ... 15
2.2.1 Connectivity to Vaisala Insight software ... 16
2.2.2 Additional features with Indigo transmitters ... 17
2.2.3 Filter options ... 18
2.3 Operating principle of CO_2 measurement ... 19
2.4 Environmental compensation ... 20
2.4.1 Temperature compensation ... 21
2.4.2 Pressure compensation ... 22
2.4.3 Background gas compensation ... 22
2.5 Probe startup ... 22
2.6 Filtering factor ... 22
2.7 Analog output overrange behavior ... 23
2.7.1 Analog output overrange example ... 24
2.8 Safety ... 25
2.8.1 ESD protection ... 25

3. Installation ... 26
3.1 GMP252 probe dimensions ... 26
3.2 Recommended installation ... 26
3.3 Installation accessories ... 27
3.3.1 243261SP mounting flange ... 28
3.3.2 243257SP mounting clips ... 29
3.3.3 ASM213582 probe holder ... 29
3.3.4 ASM212017SP spray shield ... 30
3.3.5 DTR250 radiation shield ... 31
3.3.6 DTR250A pole mounting kit ... 31
3.3.7 GMP252 probe handle accessories ... 32
3.4 Power supply ... 34
3.5 Wiring ... 34

4. Modbus ... 36

5. Vaisala Insight PC software ... 37
5.1 Connecting to Insight software ... 37

6. Using GMP252 with Indigo transmitters 39
6.1 GMP252 with Indigo200 series transmitters 39
6.1.1 Introduction to Indigo200 transmitters 39
6.1.2 Connecting probes 40
6.1.3 Analog output configuration overview 42
6.1.4 Modbus overview 43
6.1.5 Relay configuration overview 45
6.1.6 Configuring filtering factor with Insight 46
6.2 Connecting probe to Indigo300 transmitter 47
6.3 Connecting probes to Indigo500 series transmitters 48

7. Using GMP252 with Indigo80 handheld indicator 50
7.1 Indigo80 handheld indicator 50
7.1.1 Probe compatibility 50
7.1.2 Indigo80 keypad 51
7.1.3 Indigo80 main menu 51
7.2 Connecting probes to Indigo80 51
7.3 Configuring probe features with Indigo80 handheld indicator 53
7.3.1 Example of configuring filtering factor with Indigo80 handheld indicator 54
7.4 Configuring environment settings with Indigo80 handheld indicator 55

8. Operating with MI70 indicator 57
8.1 Overview of MI70 support 57
8.1.1 Probe warm-up and MI70 automatic power off 57
8.2 Basic display 57
8.3 Graphical display 58
8.4 Main menu 58
8.5 Connecting probe to MI70 indicator 58
8.6 MI70 indicator parts 59
8.7 Holding and saving the display 59
8.8 Recording data 60
8.9 Changing environmental compensation settings with MI70 indicator 60

9. Vaisala Industrial Protocol 62
9.1 Vaisala Industrial Protocol overview 62
9.2 Serial interface settings 62
9.3 Physical interface 62
9.4 Connecting with a computer 62
9.4.1 Installing driver for the USB service cable 64
9.5 Accessing serial commands from Modbus or analog mode 65
9.6 Enabling Modbus mode from Vaisala Industrial Protocol 66
9.7 Changing from digital output to analog output 66
9.8 Serial commands 67
9.9 Device information and status 69
9.10 Serial line output and communication 71
9.11 Analog output 78

9.12 Calibration and adjustment commands.....83
9.13 Environmental compensation commands.....87
9.14 Other commands.....92

10. Calibration and adjustment.....94
10.1 Calibration setup.....94
10.2 Effect of environmental compensations.....95
10.3 Limits of adjustment.....95
10.4 Adjustment types.....95
10.4.1 Adjusting CO_2 using previously measured values.....96
10.5 DRW244827SP calibration adapter.....97
10.6 Overview of calibration with Indigo200 using Insight.....98
10.6.1 Environmental compensation.....99
10.6.2 CO_2 probe adjustment example.....100
10.7 Calibration and adjustment with Indigo80 handheld indicator.....101
10.7.1 Performing guided calibration with Indigo80 handheld indicator..102
10.7.2 Performing manual adjustment with Indigo80 handheld indicator using previously measured values.....103
10.7.3 Restoring factory adjustment with Indigo80 handheld indicator...104
10.8 Calibration and adjustment with MI70 indicator.....105
10.8.1 1-point adjustment with an MI70-compatible reference probe.....105
10.8.2 1-point adjustment with a reference gas.....107

11. Environmental compensation.....110
11.1 Environmental compensation configuration overview (Insight PC software).....111

12. Maintenance.....113
12.1 Cleaning.....113
12.1.1 Chemical tolerance.....113
12.2 Changing the filter.....113

13. Troubleshooting.....115
13.1 Problem situations.....115
13.2 Error messages.....115
13.3 Analog output error state.....117

14. Technical data.....118
14.1 GMP252 specifications.....118
14.2 Spare parts and accessories.....121
14.3 Dimensions.....122
14.3.1 GMP252 probe dimensions.....122
14.3.2 243261SP mounting flange dimensions.....123
14.3.3 DRW244827SP calibration adapter dimensions.....123
14.3.4 ASM212017SP spray shield dimensions.....124
14.3.5 DTR250 radiation shield dimensions.....125
14.3.6 DTR250A pole mounting kit dimensions.....126

Appendix A: Modbus reference....127
A.1 Default communication settings....127
A.2 Function codes....127
A.3 Data encoding....127
A.3.1 32-bit floating point or 32-bit integer format....127
A.3.2 16-bit integer format....128
A.4 Modbus registers....128
A.4.1 Measurement data registers....129
A.4.2 Configuration registers....129
A.4.3 Status registers....131
A.5 Device identification objects....133
A.6 Exception responses....133
A.7 Modbus communication examples....134
A.8 Filtering factor....136

Maintenance and calibration services....137

Warranty....137

Technical support....137

Recycling....138

List of figures

Figure 1 GMP252 probe parts.....15
Figure 2 ASM212011SP flow-through adapter.....18
Figure 3 Probe cuvette with mirror and sensor chips.....19
Figure 4 CO_2 measurement in the measurement cuvette.....20
Figure 5 Example of analog output overrange behavior 24
Figure 6 GMP252 dimensions.....26
Figure 7 Probe with 243261SP mounting flange.....28
Figure 8 Probe in 243257SP mounting clips.....29
Figure 9 Probe holder ASM213582 dimensions.....30
Figure 10 Probe with ASM212017SP spray shield.....30
Figure 11 GMP252 in DTR250 radiation shield.....31
Figure 12 GMP252 installation with DTR250A pole mounting kit.....32
Figure 13 Fastening magnetic hanger to GMP252 probe handle.....33
Figure 14 GMP252 probe handle dimensions.....34
Figure 15 Connecting probe to Insight.....38
Figure 16 Indigo201 with and without display.....39
Figure 17 Connecting probes and cables to Indigo200.....41
Figure 18 Analog output configuration options example in Insight.....42
Figure 19 Analog output type (current or voltage) selection in Insight.....42
Figure 20 Insight PC software Communication menu view.....44
Figure 21 Relay configuration options (CO2 probe example).....45
Figure 22 Relay icons on display (relay A active, relay B not active).....46
Figure 23 Filtering factor setting in Insight.....46
Figure 24 Connecting probe to Indigo300 transmitter.....48
Figure 25 Connecting probes to Indigo500 transmitter.....49
Figure 26 Indigo80 handheld indicator.....50
Figure 27 Indigo80 keypad.....51
Figure 28 Indigo80 main menu.....51
Figure 29 Example of connecting probes to Indigo80.....52
Figure 30 MI70 basic display.....57
Figure 31 MI70 indicator parts.....59
Figure 32 CO_2 reading with Tcomp and Pcomp on MI70 screen.....60
Figure 33 Probe compensation settings on MI70 screen.....61
Figure 34 Example of analog output overrange behavior.....82
Figure 35 DRW244827SP calibration adapter with probe inserted.....97
Figure 36 Insight calibration menu main view (CO_2 probe).....98
Figure 37 Insight Calibrate menu selection.....99
Figure 38 Insight Restore factory adjustment selection.....99
Figure 39 Insight environmental compensation configuration example with CO_2 probe.....100
Figure 40 Calibration methods available with Indigo80.....101
Figure 41 Measurement menu view in Insight PC software.....111
Figure 42 Opening the filter.....113
Figure 43 GMP252 dimensions.....122
Figure 44 243261SP mounting flange dimensions.....123

Figure 45 243261SP mounting flange dimensions, cross section..... 123
Figure 46 DRW244827SP calibration adapter dimensions..... 123
Figure 47 ASM212017SP spray shield dimensions.....124
Figure 48 GMP252 spray shield cross section..... 124
Figure 49 DTR250 radiation shield dimensions (mm)..... 125
Figure 50 DTR250A pole mounting kit dimensions (in mm [inch]).....126

List of tables

Table 1 Document versions (English) 11
Table 2 Related manuals 13
Table 3 Analog output overrange clipping and error limits 23
Table 4 M12 male connector 34
Table 5 Default Modbus serial communication settings 36
Table 6 Indigo202 Modbus registers 43
Table 7 Default Modbus serial communication settings 45
Table 8 Default serial interface settings 62
Table 9 Basic serial commands 67
Table 10 Advanced serial commands 68
Table 11 ? command 69
Table 12 errs command 69
Table 13 help command 69
Table 14 snum command 70
Table 15 system command 70
Table 16 time command 71
Table 17 vers command 71
Table 18 addr command 71
Table 19 close command 72
Table 20 form command 72
Table 21 Output parameters for form command 73
Table 22 Modifiers for form command 73
Table 23 intv command 74
Table 24 open command 75
Table 25 r command 75
Table 26 s command 75
Table 27 sdelay command 76
Table 28 send command 76
Table 29 seri command 77
Table 30 smode command 77
Table 31 amode command 78
Table 32 aover command 79
Table 33 asel command 82
Table 34 adate command 83
Table 35 atext command 84
Table 36 cdate command 84
Table 37 ctext command 84
Table 38 cco2 command 85
Table 39 env command 87
Table 40 o2cmode command 89
Table 41 pcmode command 90
Table 42 rhcmode command 91
Table 43 tcmode command 92
Table 44 frestore command 92
Table 45 pass command 93

Table 46 reset command....93
Table 47 GMP252 measurement performance....118
Table 48 GMP252 operating environment....119
Table 49 GMP252 inputs and outputs....120
Table 50 GMP252 mechanical specifications....120
Table 51 GMP252 compliance....121
Table 52 GMP252 spare parts and accessories....121
Table 53 Default Modbus serial communication settings....127
Table 54 Modbus function codes....127
Table 55 Interpretation of 16-bit signed integer values....128
Table 56 Modbus measurement data registers (read-only)....129
Table 57 Modbus configuration data registers (writable)....129
Table 58 Modbus status registers (read-only)....131
Table 59 Error codes in register 0x2052....132
Table 60 Device identification objects....133
Table 61 Modbus exception responses....133

1. About this document

1.1 Version information

Indigo200 transmitters' wireless configuration interface has been replaced with a USB-C interface in 2022. For instructions on configuring GMP252 probes with the earlier wireless configuration interface, see *GMP252 User Guide* revision M211897EN-D, available at docs.vaisala.com.

Table 1 Document versions (English)

Document code	Date	Description

M211897EN-F	January 2026	Probe body design updated: orientation mark no longer used in the probe body, M12 connector and probe body both now housed in PBT polymer. Added information about entering previously measured values in adjustment. Environmental compensation values can now be entered directly in Insight PC software without enabling the compensation separately.
		Added sections:
		• Calibration and adjustment with Indigo80 handheld indicator (page 101)
		• Performing guided calibration with Indigo80 handheld indicator (page 102)
		• Adjusting CO_2using previously measured values (page 96)
		• Environmental compensation configuration overview (Insight PC software) (page 111)
		• Maintenance and calibration services (page 137)
		Updated sections:
		• Additional features with Indigo transmitters (page 17)
		• Calibration setup (page 94)
		• Adjustment types (page 95)
		• Performing manual adjustment with Indigo80 handheld indicator using previously measured values (page 103)
		• Environmental compensation commands (page 87) and Configuration registers (page 129)
		  • Temperature compensation range updated to −40 ... +60 °C
		  • Internal temperature compensation option renamed from *measured* to *internal*. The change is applicable from probe firmware version 1.4.3 onwards.
		• GMP252 product specifications
		Modbus register number notation updated throughout the document.

Document code	Date	Description

M211897EN-E	July 2023	• Added information on using the GMP252 probe with the Indigo80 handheld indicator.
		• References to Indigo200 transmitters' wireless configuration interface replaced with information about the new Indigo200 transmitters that have a USB-C interface. For instructions on configuring GMP252 probes with the earlier wireless configuration interface, see *GMP252 User Guide* revision M211897EN-D, available at docs.vaisala.com.
		• Added sections ASM213582 probe holder (page 29) and GMP252 probe handle accessories (page 32).
		• Updated sections:
		  • Recommended installation (page 26)
		  • DTR250 radiation shield (page 31)
		  • DTR250A pole mounting kit (page 31)
		  • Environmental compensation commands (page 87)
		  • Error messages (page 115)
		  • GMP252 specifications (page 118)
		  • Spare parts and accessories (page 121)
		  • Status registers (page 131).
		• Removed section *Patent notice*.

M211897EN-D	March 2018	• Added information about using the probe with Vaisala Insight PC software. • PuTTy terminal settings instructions updated. • Calibration uncertainty specification updated. • DTR250A radiation shield pole mounting kit added. • Added recommendation to disable MI70 indicator's automatic power off feature when used with GMP252. • Updated instructions on using MI70 to configure environmental compensations. • Default device address in serial line communication corrected (240). • Corrected the unit information of **sdelay** command. • Added a note about maximum voltage output to analog error state output configuration. • Information on Modbus register numbers updated.

1.2 Related manuals

For the latest versions of these documents, see docs.vaisala.com.

Table 2 Related manuals

Document code	Description
M211799EN	Vaisala GMP251 and GMP80P Carbon Dioxide Probe User Guide
M211798EN	Vaisala GMP251 Carbon Dioxide Probe Quick Guide
M211893EN	Vaisala GMP252 Carbon Dioxide Probe Quick Guide
M212945EN	Vaisala GMP80P Portable Carbon Dioxide Probe with Pump Sampling Quick Guide
M212722EN	Vaisala Indigo80 Handheld Indicator User Guide
M212842EN	Vaisala Indigo201 Analog Output Transmitter User Guide
M212815EN	Vaisala Indigo201 Analog Output Transmitter Quick Guide
M212843EN	Vaisala Indigo202 Digital Transmitter User Guide
M212816EN	Vaisala Indigo202 Digital Transmitter Quick Guide
M212887EN	Using GMP252 Probe with Probe Handle Accessory GMP252HANDLESP or ASM214342SP Quick Guide
M211986EN	Vaisala DTR250 Radiation Shield Quick Guide
M212041EN	Vaisala DTR250A Radiation Shield Installation Kit Quick Guide

1.3 Documentation conventions

WARNING! alerts you to a serious hazard. If you do not read and follow instructions carefully at this point, there is a risk of injury or even death.

CAUTION! warns you of a potential hazard. If you do not read and follow instructions carefully at this point, the product could be damaged or important data could be lost.

Note highlights important information on using the product.

Tip gives information for using the product more efficiently.

1.4 Trademarks

Vaisala® and CARBOCAP® are registered trademarks of Vaisala Oyj.

Modbus® is a registered trademark of Schneider Automation Inc.

Windows® is either a registered trademark or trademark of Microsoft Corporation in the United States and other countries.

All other product or company names that may be mentioned in this publication are trade names, trademarks, or registered trademarks of their respective owners.

2. Product overview

2.1 Introduction to GMP252

GMP252 is designed for CO_2 measurement in demanding applications that require reliable and accurate performance. The measurement range is 0–10 000 ppmCO_2 (measurements can be carried out in the 10 000–30 000 ppmCO_2 range with reduced accuracy).

The probe is based on Vaisala's patented 2nd generation CARBOCAP® technology and equipped with Vaisala's Microglow infrared light source. The probe is easy to install with a plug-in/plug-out M12 connection.

GMP252 is able to compensate for temperature, pressure and background gas. For temperature compensation purposes, the probe includes an internal temperature sensor that allows measurement compensation according to ambient temperature. As dust and most chemicals do not affect the measurement, and the effect of temperature, pressure and background gas can be compensated for, GMP252 can provide accurate and stable measurements in a wide range of applications.

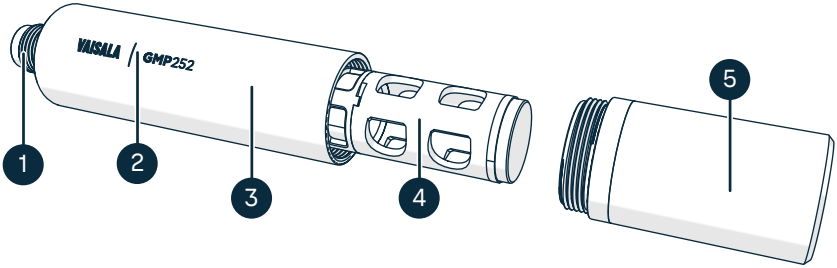

Figure 1 GMP252 probe parts

1. 5-pin M12 connector. For pinout, see Wiring (page 34).
2. Probe name (front) and laser-printed type label (back).
3. Probe body. Contains the main component board.
4. Measurement cuvette with optics and CARBOCAP® CO_2 sensor.
5. Filter (sintered, PTFE: see also Filter options (page 18)).

CAUTION! Do not attempt to open the probe body. There are no user serviceable parts inside the probe body.

2.2 Basic features and options

- CO_2 measurement range 0 ... 10 000 ppmCO_2.

- Measurement up to 30 000 ppmCO_2 with reduced accuracy.
- Operating temperature range -40 ... +60 °C (-40 ... +140 °F).
- Vaisala CARBOCAP® CO_2 sensor with excellent long-term stability.
- Measurement compensated for effects of temperature, pressure, and background gas. The temperature compensation can be based on an integrated temperature sensor or use a set temperature. Pressure and background gas parameters can be set to the probe.
- Heating to avoid condensation on optical elements.
- Digital output with RS-485:
  - Modbus RTU
  - Vaisala Industrial Protocol
- Analog output:
  - Current output (0 ... 20 mA or 4 ... 20 mA)
  - Voltage output (0 ... 5 V or 0 ... 10 V)
- Can be used as a standalone probe or with Vaisala Indigo transmitters
- Compatible with Indigo80 handheld indicator and MI70 handheld indicator
- Can be connected to Vaisala Insight PC software for configuration, diagnostics, and temporary online monitoring
- Easy plug-in, plug-out.

More information

- Operating principle of CO2 measurement (page 19)
- Environmental compensation (page 20)
- Vaisala Industrial Protocol overview (page 62)
- Modbus (page 36)
- Vaisala Insight PC software (page 37)
- Indigo80 handheld indicator (page 50)
- Overview of MI70 support (page 57)
- GMP252 specifications (page 118)

2.2.1 Connectivity to Vaisala Insight software

The probe can be connected to Vaisala Insight software using a Vaisala USB cable (item code 242659) or Vaisala Indigo USB adapter (item code USB2). With the Insight software, you can:

- Calibrate and adjust the measurement.
- See device information and status.
- See real-time measurement.
- Configure serial communication settings, environmental compensation settings, filtering factor, and analog output parameters and scaling.

More information

- Connecting to Insight software (page 37)

2.2.2 Additional features with Indigo transmitters

GMP252 probes manufactured from 2017 onwards are compatible with Vaisala Indigo200 transmitters.

Connecting the probe to an Indigo transmitter provides a wide range of additional options for outputs, measurement viewing, status monitoring, and configuration interface access.

Examples of additional features available with Indigo520 transmitters:

- Touchscreen display for real-time data viewing and configuration
- Support for 2 probes simultaneously
- 4 configurable analog outputs
- 2 configurable relays
- 2-wire current loop analog input
- Barometer module for barometric pressure measurement (optional module)
- Ethernet connection with web interface for remote access
- Modbus TCP/IP protocol
- Service port for connecting to Indigo80 handheld indicator

Examples of additional features available with Indigo300 transmitters:

- Numerical and graphical display for real-time data viewing
- 3 pre-configurable analog outputs
- Service port on the front for connecting to Vaisala Insight PC software or Indigo80 handheld indicator for easy configuration access

Examples of additional features available with Indigo200 series transmitters:

- 3.5” TFT LCD color display or non-display model with LED indicator
- Digital output or 3 analog outputs (depending on the transmitter model)
- 2 configurable relays
- USB-C connection to Vaisala Insight PC software for easy configuration access

Available features vary depending on the Indigo transmitter model. For more information on Indigo transmitters, see vaisala.com/indigo.

2.2.3 Filter options

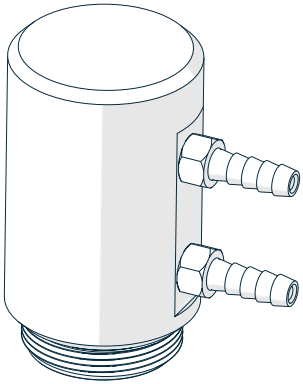

Figure 2 ASM212011SP flow-through adapter

The GMP252 flow-through adapter (item code ASM212011SP) has two gas ports for controlled gas feed (port outer diameter 4.6 mm, port hole inner diameter 2 mm, suitable for tubing with 4 mm inner diameter). For information on ordering accessories and spare parts, see Spare parts and accessories (page 121).

2.3 Operating principle of CO_2 measurement

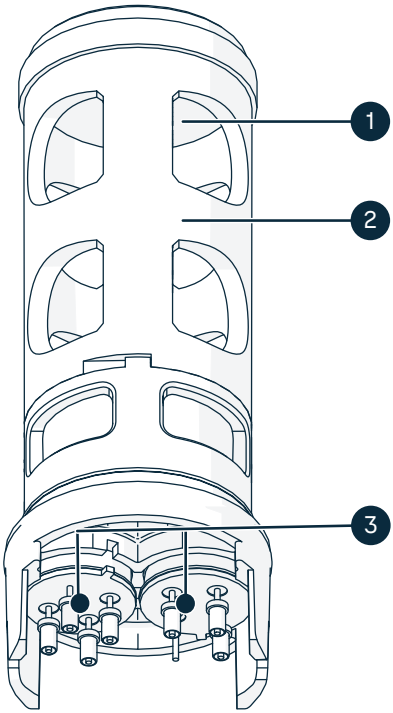

The Vaisala CARBOCAP® sensor used in the probe is a silicon-based, nondispersive infrared (NDIR) sensor for measurement of gaseous carbon dioxide in air-like gases.

Figure 3 Probe cuvette with mirror and sensor chips

1 Mirror
2 Cuvette
3 Sensor chips under TO5 package

The sensitivity to carbon dioxide is based on absorption of infrared light at a characteristic wavelength. During measurement, infrared light is routed through the cuvette that contains the gas to be measured. A mirror reflects the light from the cuvette to a thermopile detector that measures the light intensity at a wavelength determined by a Fabry–Pérot interferometer (FPI) and a band pass filter.

The carbon dioxide measurement consists of two steps: first, the FPI is electrically tuned so that its pass band coincides with the characteristic absorption wavelength of carbon dioxide and the signal is recorded. Second, the pass band is shifted to a wavelength where no absorption occurs in order to get a reference signal. The ratio of these two signals, one at the absorption wavelength and the other at the reference wavelength, gives the fraction of light absorption from which the carbon dioxide concentration is calculated. Measuring the reference signal compensates the possible effects of sensor aging and signal attenuation due to dirt on optical surfaces, making the sensor very stable over time.

TO5 packages with hermetic windows are used to protect the sensor chips from moisture and contamination. A heater chip is utilized to prevent condensation in normal operation.

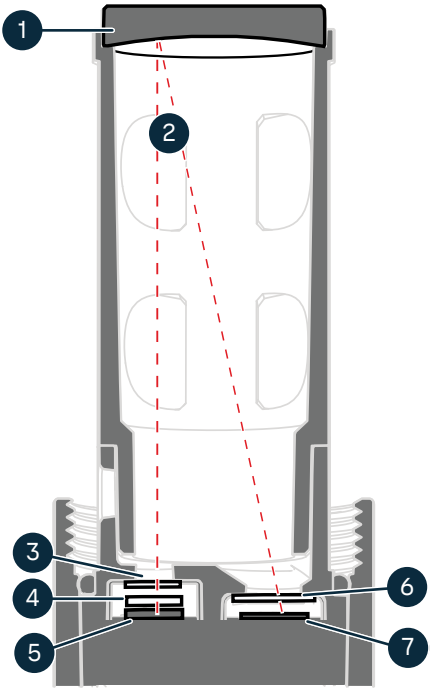

Figure 4 CO_2 measurement in the measurement cuvette

1 Gold-plated mirror
2 Light absorbed by CO_2 in the measured gas
3 Hermetic window
4 Fabry-Pérot interferometer
5 Light source (Microglow)
6 Hermetic window
7 Thermopile detector

2.4 Environmental compensation

When necessary, various environmental compensations can be applied to improve the CO_2 measurement accuracy of the probe.

The probe can compensate for the effects of the following parameters:

- Temperature
- Pressure
- Background gas oxygen (O_2) content
- Background gas relative humidity (%RH)

To apply an accurate relative humidity compensation, make sure that also the temperature compensation and pressure compensation configurations match the measurement environment.

The probe has an on-board temperature sensor that can be used to compensate for temperature. Additionally, if the probe is integrated in a system that measures one or more of the compensation parameters (T, P, RH, O_2), they can be updated to the probe continuously.

Compensation parameters are configured on the order form when ordering the probe, and can later be updated using for example Vaisala Insight PC software, Vaisala Indigo80 handheld indicator, or Modbus protocol.

You can also turn off any of the compensations. In that case, the probe uses the default compensation value that is mathematically neutral for the probe's internal compensation model.

You can configure the environmental compensation settings with any of the following options:

- Vaisala Industrial Protocol serial commands
- Vaisala Insight software
- Modbus configuration registers
- MI70 handheld indicator
- Indigo80 handheld indicator

The environmental compensation configuration options available in the MI70 handheld indicator are not compatible with the probe. Using MI70 to configure the environmental compensation settings of the probe can decrease measurement accuracy.

More information

- Environmental compensation commands (page 87)
- Vaisala Insight PC software (page 37)
- Configuring environment settings with Indigo80 handheld indicator (page 55)
- Changing environmental compensation settings with MI70 indicator (page 60)
- Effect of environmental compensations (page 95)
- Configuration registers (page 129)

2.4.1 Temperature compensation

The probe can measure the approximate temperature of the CARBOCAP® sensor for compensation, or use a fixed setpoint. Unless a dedicated temperature measurement is available and can be regularly updated to the probe, it is strongly recommended to use the probe's internal temperature compensation to ensure real-time accurate measurements. If the measurement is made in a constant temperature, the constant temperature can be set as the compensation value (fixed setpoint option).

If temperature compensation is turned off, the probe uses the default value of +25 °C (+77 °F).

When the probe is installed through a flange and part of the probe and the cable is left outside the measuring environment, it is possible that temperature conduction from the probe body and cable outside the measurement environment affects the temperature compensation and decreases measurement accuracy.

2.4.2 Pressure compensation

The probe does not have on-board pressure measurement. However, a pressure reading from an external source can be used as a setpoint value for compensation using for example Vaisala Insight PC software, Vaisala Indigo80 handheld indicator, or Modbus protocol.

If pressure compensation is turned off, the probe uses the default compensation value of 1013 hPa.

2.4.3 Background gas compensation

The probe does not have on-board oxygen or relative humidity measurement. However, oxygen and relative humidity readings from an external source can be used as setpoint values for compensation using for example Vaisala Insight PC software, Vaisala Indigo80 handheld indicator, or Modbus protocol. The default setpoint values are as follows:

- Oxygen concentration: 0 %O_2 or 21 %O_2
- Relative humidity: 0 %RH or 50 %RH

If background gas compensations are turned off, the probe uses the value 0 % for both.

In practice, when CO_2 is measured at a ppm level, O_2 and RH compensations have a very small effect on the accuracy of the measurement.

2.5 Probe startup

When powered on, the probe starts up within 12 seconds. Measurements from the outputs (digital and analog) become available during this time but note that they will only reach specified accuracy after a 2-minute warm-up period. For this reason, you should design your system so that it does not rely on measurements from the probe during this time. When the probe is in analog output mode, the probe remains in an error state during the start-up phase until measurement output becomes available.

Specifically note that the CO_2 reading will rise to the correct reading as the sensor's infrared emitter achieves operating temperature.

2.6 Filtering factor

You can set a filtering factor that affects the speed at which the latest CO_2 measurement is integrated into the output of the probe. This allows averaging the output if the measuring environment produces occasional exceptionally high or low readings.

The filtering factor can be set either with the Insight PC software, Modbus configuration registers, or with the Indigo80 handheld indicator.

More information

- Example of configuring filtering factor with Indigo80 handheld indicator (page 54)
- Configuration registers (page 129)

2.7 Analog output overrange behavior

The analog output has a defined behavior when the measurement is outside the scaled analog output range. At first, the output is clipped when the measurement exceeds a set limit (the measurement continues, but the output does not change from the clipped value).

When the measurement exceeds the second limit (error limit), the analog output switches to the error state defined for the output.

The table below lists the clipping and error limits and default error state outputs for the analog voltage and current outputs.

Table 3 Analog output overrange clipping and error limits

Output voltage / current	Clipping limit	Error limit	Default error state output
0–5 V	>5 %	>10 %	0 V
0–10 V	>1 %	>10 %	0 V
0–20 mA	>5 %	>10 %	23 mA
4–20 mA	>5 %	>10 %	2 mA

The same clipping and error limits are applied when the measured value drops back to the scaled range: at first the output returns to the clipped value from the error state, and then to normal output.

Clipping and error state limits differ for 0–10 V and 0–5 V outputs. For 0–10 V output the limits are 1 % and 10 %, and for 0–5 V output the limits are 5 % and 10 %.

When setting the error output voltage (**amode** command), note that the probe's maximum voltage output is 10.325 V.

More information

- Analog output (page 78)

2.7.1 Analog output overrange example

Consider a probe with 0 ... 5 V output, scaled to 0 ... 2000 ppmCO_2.

- When the measured CO_2 rises above 2000 ppmCO_2, the output rises above 5 V.
- The output keeps rising until the measurement is 2100 ppmCO_2, at which point the probe outputs 5.25 V.
- If the CO_2 level rises above 2100 ppmCO_2, the output still remains at 5.25 V.
- If the CO_2 level rises above 2200 ppmCO_2, the output enters the error state, which is 0 V for the 0 ... 5 V output.

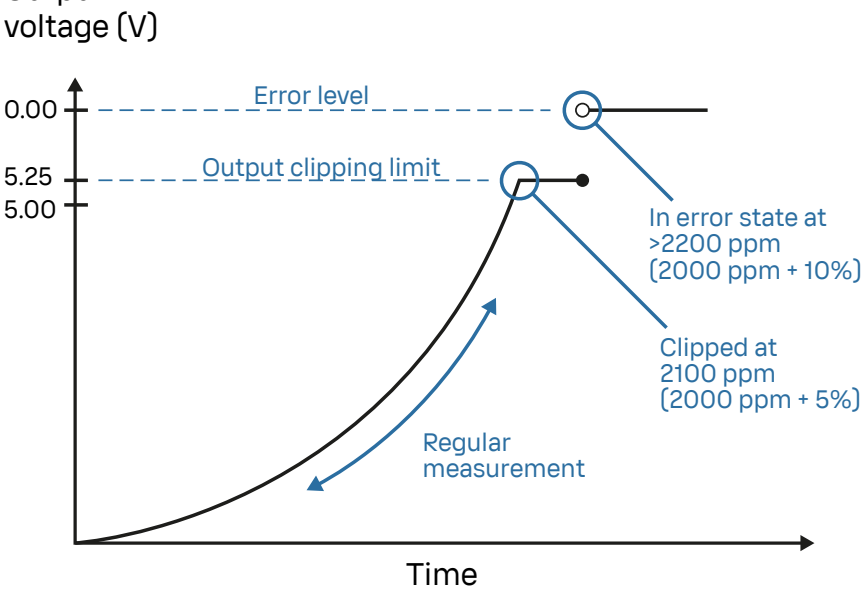

Figure 5 Example of analog output overrange behavior

This example uses output scaled to 0 ... 5 V and 0 ...2000 ppmCO_2, error level set to 0 V, clipping set to 5 % overrange, and error limit set to 10 % overrange. CO_2 concentrations (ppm) are indicated for the clipping point and error limit point.

> This overrange and error behavior is specific to the analog output, and does not affect the readings of the digital outputs.

You can change the analog output overrange behavior using the **aover** command.

2.8 Safety

The probe delivered to you has been tested for safety and approved as shipped from the factory. Note the following precautions:

WARNING! When returning a product for calibration or repair, make sure it has not been exposed to dangerous contamination, and is safe to handle without special precautions.

CAUTION! Do not modify the unit or use it in ways not described in the documentation. Improper modification or use may lead to safety hazards, equipment damage, failure to perform according to specification, or decreased equipment lifetime.

CAUTION! Do not attempt to open the probe body. There are no user serviceable parts inside the probe body.

2.8.1 ESD protection

Electrostatic Discharge (ESD) can cause immediate or latent damage to electronic circuits. Vaisala products are adequately protected against ESD for their intended use. However, it is possible to damage the product by delivering electrostatic discharges when touching an exposed contact on the product.

To make sure you are not delivering high static voltages yourself, avoid touching the pins on the M12 connector.

3. Installation

3.1 GMP252 probe dimensions

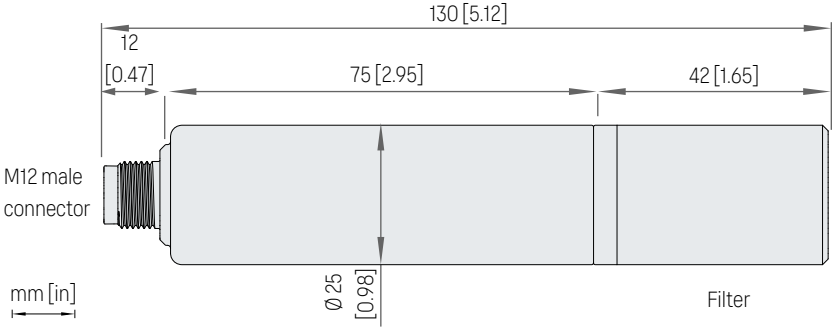

Figure 6 GMP252 dimensions

3.2 Recommended installation

The GMP252 probe can be installed in an environment with an operating temperature range of −40 ... +60 °C (−40 ... +140 °F). Make sure the probe is in a location that represents the measurement environment properly.

> In environments with high levels of humidity and risk of condensation, install the probe horizontally to prevent condensation from forming inside the filter and on the optical surfaces.

The 5-pin male M12 connector on the probe provides an easy plug-in/plug-out connection to a compatible cable. Using a shielded cable in the installation and grounding is recommended. The GMP252 probe itself does not require a shielded cable, but if the installation environment contains high levels of EMC noise, the disturbance may be transmitted to another connected device through an unshielded cable. Vaisala Online Store at store.vaisala.com offers a wide selection of shielded cables in different lengths.

More information

- Spare parts and accessories (page 121)

3.3 Installation accessories

The probe can be installed through a surface using the optional flange accessory (Vaisala product code 243261SP), or attached for example to a wall with the optional clip accessory (two-clip set, Vaisala product code 243257SP).

For installations where a pressure washer is used to clean the measurement area, a spray shield with an IPX9 rating (Vaisala product code ASM212017SP) is available as an optional accessory.

If the probe is installed outdoors, the optional DTR250 radiation shield accessory can be used to protect the probe from solar radiation and precipitation. The radiation shield can be ordered either as a stand-alone item with an integrated mounting plate, or together with a pole mounting kit.

In environments with high levels of humidity and risk of condensation, install the probe horizontally to prevent condensation from forming inside the filter and on the optical surfaces.

More information

- Spare parts and accessories (page 121)

3.3.1 243261SP mounting flange

The optional flange accessory is used to install Ø 25 mm (0.98 in) probes through a wall or other surface.

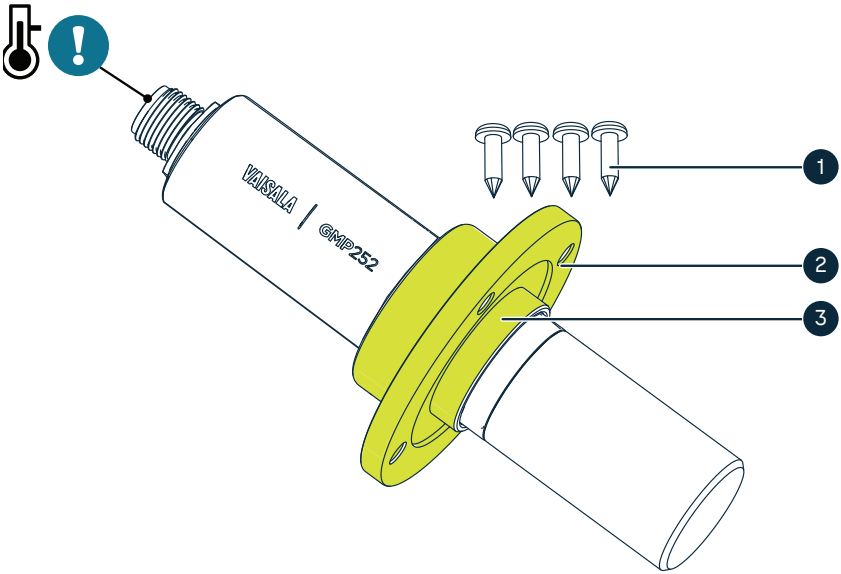

Figure 7 Probe with 243261SP mounting flange

1 4 Phillips head screws (included)
2 Mounting flange (diameter 60 mm (2.36 in)) with four Ø 4.2 mm (Ø 0.17 in) screw holes
3 Gasket ring

Leaving part of the probe body and the cable outside the measurement environment can cause heat conduction that affects the temperature compensation and measurement accuracy.

More information

- 243261SP mounting flange dimensions (page 123)

3.3.2 243257SP mounting clips

The optional mounting clips (set of two clips) are used to hold the probe in place for example on a wall or other surface. Each clip base attaches to the installation surface with one screw (screw hole Ø 4.2 mm).

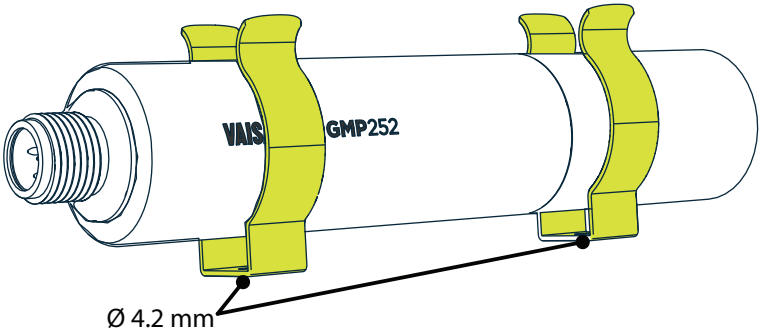

Figure 8 Probe in 243257SP mounting clips

3.3.3 ASM213582 probe holder

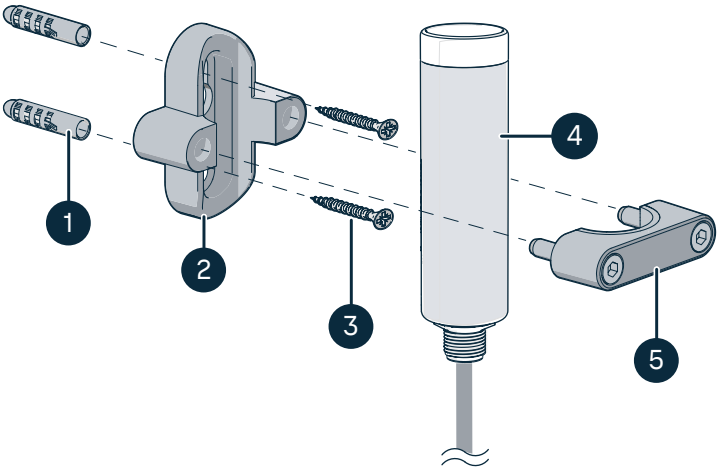

1 Wall plugs (2 pcs included, 6×30 nylon)
2 Base of the probe holder
3 Screws (2 pcs included, 4.8×25 DIN7981C PZ A4)
4 Ø 25 mm (0.98 in) probe body
5 Top of the probe holder with 2 hex screws (4-mm socket)

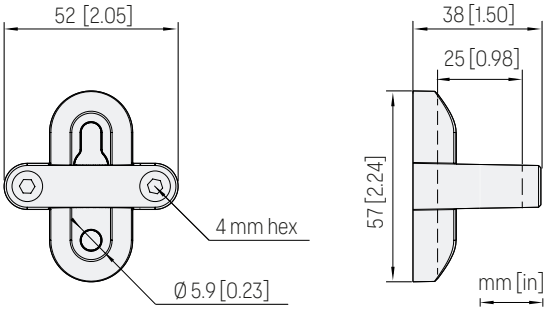

Figure 9 Probe holder ASM213582 dimensions

3.3.3.1 Mounting the probe body using probe holder ASM213582

Probe holder ASM213582 is designed for attaching a 25 mm probe body to a wall or other surface with screws.

1. Use a 4-mm Allen key to open the hex screws and remove the top part of the probe holder.
2. Hold the base part against the mounting surface and mark the locations of the 2 screw holes.
3. Drill holes at the marked locations using a 6-mm drill bit. Make the holes at least 30 mm deep.
4. Insert the wall plugs in the holes.
5. Mount the base part using screws.
6. Insert the probe body in the holder.
7. Place the top part on the base and tighten the hex screws with a 4-mm Allen key.

3.3.4 ASM212017SP spray shield

The optional spray shield (Vaisala item code ASM212017SP) allows washing the probe with a pressure washer without exposing the sensor to moisture (IPX9 rating).

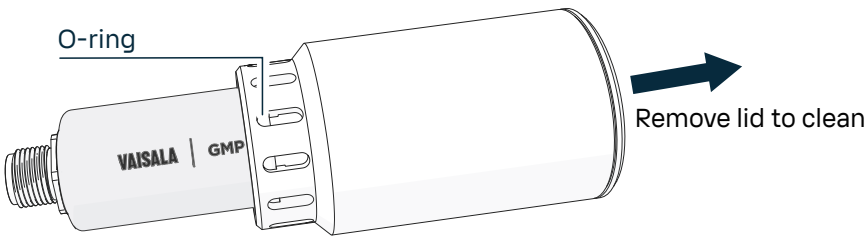

Figure 10 Probe with ASM212017SP spray shield

The spray shield can limit or prevent the use of the probe mounting clips (243257SP).

More information

- ASM212017SP spray shield dimensions (page 124)

3.3.5 DTR250 radiation shield

The optional DTR250 radiation shield (Vaisala item code: DTR250) protects the probe from solar radiation and precipitation in outdoor installations.

Figure 11 GMP252 in DTR250 radiation shield

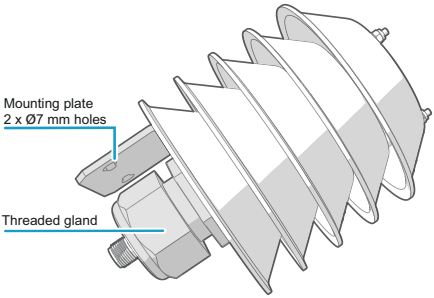

For installation instructions, see *DTR250 Radiation Shield Quick Guide* (M211986EN), available at docs.vaisala.com.

More information

- DTR250 radiation shield dimensions (page 125)

3.3.6 DTR250A pole mounting kit

The DTR250A pole mounting kit (Vaisala item code: DTR250A) includes the DTR250 radiation shield and an installation kit for pole masts (pole mast diameter: 30 ... 60 mm).

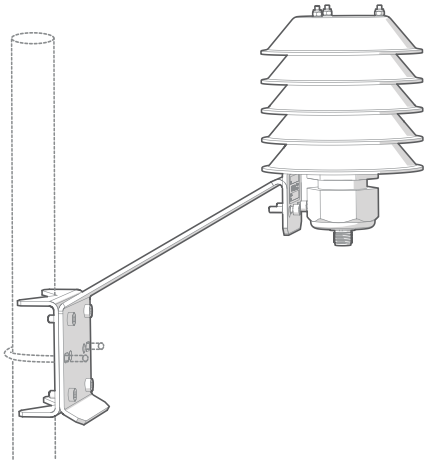

Figure 12 GMP252 installation with DTR250A pole mounting kit

For installation instructions, see *DTR250A Radiation Shield Installation Kit Quick Guide* (M212041EN), available at docs.vaisala.com.

More information

- DTR250A pole mounting kit dimensions (page 126)

3.3.7 GMP252 probe handle accessories

Overview

GMP252 probe handle accessories enable convenient portable use of Vaisala CARBOCAP® Carbon Dioxide Probe GMP252, especially when using the probe with Vaisala Indigo80 Handheld Indicator.

Probe handle accessory **GMP252HANDLESP** comes with a magnetic hanger, which enables attaching the probe to a metallic surface during, for example, logging of GMP252 measurement data.

Probe handle accessory **ASM214342SP** consists of the plastic handle only.

Inserting GMP252 probe into handle

Insert the probe into the handle by pushing it in slowly from the open end of the handle, filter first. Push until you hear a click and the probe is secured into place.

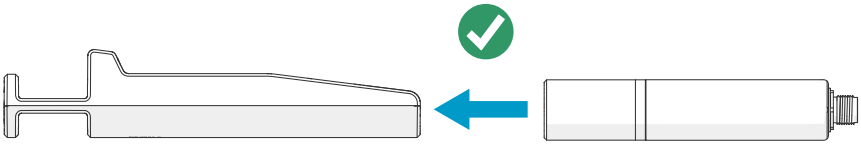

CAUTION! Do not press the probe into the handle using force. Always push it in from the end of the handle.

Removing GMP252 probe from handle

To remove the probe, hold the handle firmly with both hands and release the clip that holds the probe, then pull out the probe.

- Avoid pulling the probe by its cable
- Avoid depositing dirt on the probe filter if you need to touch it during removal

Fastening magnetic hanger to GMP252 probe handle

A magnetic hanger is available as an optional accessory from Vaisala (item code ASM214318SP). [1)]

- 2-mm Allen key
- Hex-head screw M4×8 (1 pc) (not provided by Vaisala)

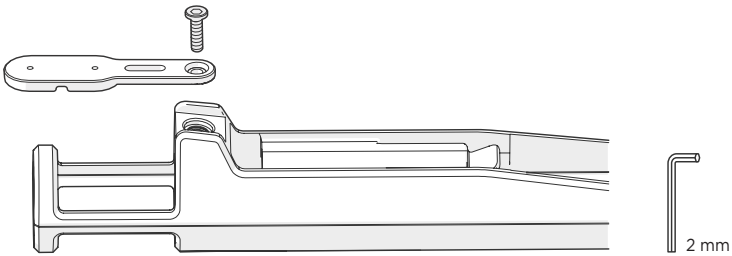

Figure 13 Fastening magnetic hanger to GMP252 probe handle

1) *The magnetic hanger is included in probe handle accessory GMP252HANDLESP, and it is already in place as shipped from the factory.*

GMP252 probe handle specifications and dimensions

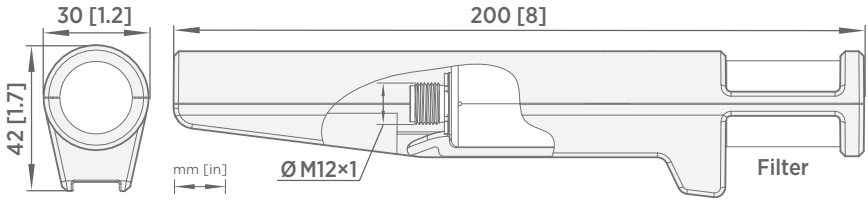

Figure 14 GMP252 probe handle dimensions

3.4 Power supply

The supply voltage range of the probe is 12–30 V DC with the digital output option. If the analog output is used, the supply voltage range is 12–30 V DC for voltage output and 20–30 V DC for current output.

Typical power consumption is less than 0.4 W in continuous operation, and the maximum is 0.5 W.

More information

- GMP252 specifications (page 118)

3.5 Wiring

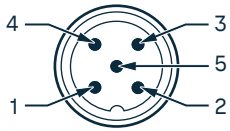

Table 4 M12 male connector

Pin#	Function	Note	Cable 223263SP wire colors
1	Power in	• With digital output: 12–30 V DC • With voltage output: 12–30 V DC • With current output: 20–30 V DC Typical average power consumption <0.4 W, maximum 0.5 W.	Brown
2	RS-485- or voltage output	Voltage: 0–5 V DC or 0–10 V DC (default analog output scaling)	White

Pin#	Function	Note	Cable 223263SP wire colors
3	GND	–	Blue
4	RS-485 + or current output	Current: 0–20 mA or 4–20 mA (default analog output scaling)	Black
5	Output control	Connecting pin #5 to GND (pin #3) forces the probe to analog output mode. If an analog output configuration has not been selected, default 0–10 V DC and 4–20 mA scalings are used. If pin #5 is not connected, the analog or digital output selected when ordering or set later through configuration is used.	Gray

Note that the probe always remains in analog mode when pin #5 is connected to pin #3, and cannot be switched to digital output in this wiring option.

4. Modbus

The probe can be accessed using the Modbus serial communication protocol. The supported Modbus variant is Modbus RTU (Serial Modbus) over RS-485 interface.

For instructions on enabling the Modbus mode when you are using the probe with Vaisala Industrial Protocol, see Enabling Modbus mode from Vaisala Industrial Protocol (page 66).

For instructions on switching to Vaisala Industrial Protocol when the probe is in Modbus mode, see Accessing serial commands from Modbus or analog mode (page 65).

For information on using Modbus with the Indigo202 digital transmitter, see Modbus overview (page 43).

The pre-configured default Modbus serial settings are presented in the following table.

Table 5 Default Modbus serial communication settings

Description	Default value
Serial bit rate	19200
Parity	N
Number of data bits	8
Number of stop bits	2
Modbus device address	240

More information

- Function codes (page 127)
- Modbus registers (page 128)

5. Vaisala Insight PC software

Vaisala Insight PC software is a configuration and calibration software for Vaisala devices. Insight is available for the Windows operating system (64-bit only). For a full list of supported operating system versions, see vaisala.com/insight.

With Insight, you can:

- See device information and status.
- See real-time measurement data.
- Configure serial communication settings, environmental compensation settings, filtering factor, and analog output parameters and scaling.
- Calibrate and adjust the device.
- Perform short-term data logging for laboratory testing or evaluation purposes, for example.

To ensure support for your device, download the latest version of Insight at vaisala.com/insight.

The probe can be connected to Insight using a Vaisala USB cable (item code 242659) or Vaisala Indigo USB adapter (item code USB2).

GMP252 probes support Insight from probe software version 1.3.0 onwards.

5.1 Connecting to Insight software

- Computer with Vaisala Insight software installed
- USB service cable (item code 242659) or Vaisala Indigo USB adapter (item code USB2)

CAUTION! When connecting several devices at the same time, note that your computer may not be able to supply enough power through its USB ports. Use an externally powered USB hub that can supply >2 W for each port.

Figure 15 Connecting probe to Insight

Connect the probe to Insight software in the exact order described in the following steps.

1. Open the Insight software on your computer.
2. Connect the USB cable to a free USB port on the PC.
3. Connect the probe to the USB cable.
4. Wait for Insight software to detect the probe.

6. Using GMP252 with Indigo transmitters

Indigo transmitters are host devices that extend the feature set of connected probes with a range of additional options for outputs, configuration access, measurement viewing, and status monitoring.

Available features vary depending on the transmitter model. Models without display use a LED indicator for notifications.

For more information on the features of the different Indigo transmitter models, see vaisala.com/indigo.

For instructions on installing and configuring Indigo transmitters, see the applicable Indigo transmitter user documentation available at the Vaisala documentation portal docs.vaisala.com.

6.1 GMP252 with Indigo200 series transmitters

6.1.1 Introduction to Indigo200 transmitters

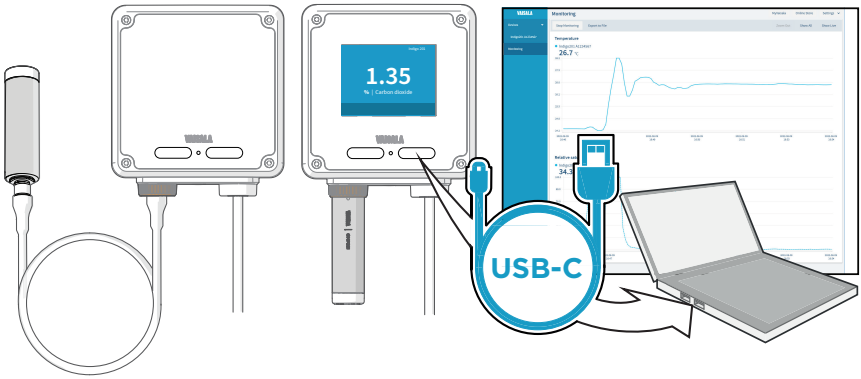

Figure 16 Indigo201 with and without display

Vaisala Indigo200 transmitters are a plug-and-play host device platform for Vaisala Indigo-compatible probes. Indigo transmitters extend the feature set of connected probes with a range of additional options for outputs, measurement viewing, status monitoring, and configuration interface access.

Depending on the Indigo200 transmitter model, a display is available as an optional selection or as a standard feature. In the non-display model, an LED indicator is used for notifications. Probes can be connected either directly on the transmitter from the probe's connector, or by using a cable between Indigo and the probe.

For easy access to configuration and additional monitoring options, the transmitter can be connected to Vaisala Insight PC software with a USB cable.

The Indigo201 transmitter is designed for analog output applications. The transmitter's output options include 3 analog output channels (current or voltage) and 2 relays.

The Indigo202 transmitter is designed for digital output applications. The transmitter's output options include RS-485 Modbus RTU and 2 programmable relays.

Note that Indigo200 transmitters switched from a WLAN configuration interface to a USB-C cable configuration interface (Vaisala Insight PC software) in 2022. For instructions on configuring GMP252 probes with the earlier WLAN interface, see the earlier *GMP252 User Guide* revision M211897EN-E, available at docs.vaisala.com.

For more information on Indigo transmitter models, see vaisala.com/indigo.

6.1.2 Connecting probes

CAUTION! Only connect compatible measurement devices to the transmitter. Attempting to connect incompatible devices or cables can damage the equipment. Refer to transmitter specifications for compatibility information.

Probes and probe cables can be connected to the transmitter both when it is powered on and when it is powered off.

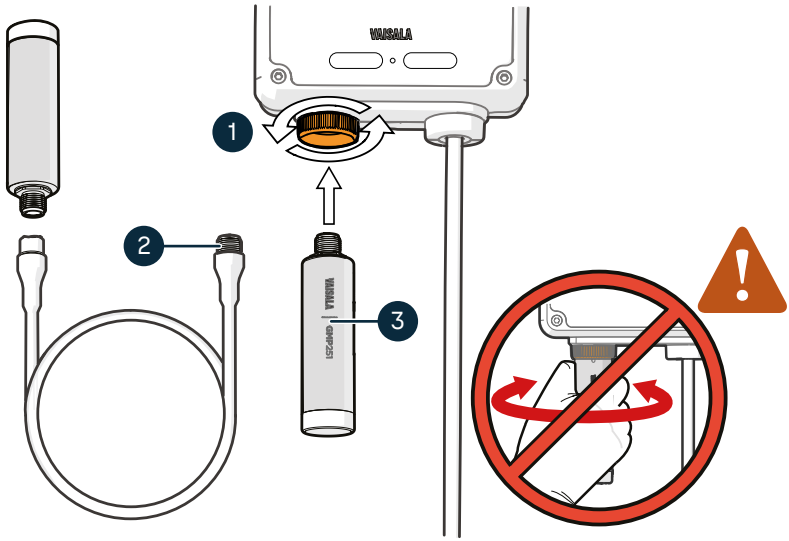

Figure 17 Connecting probes and cables to Indigo200

1 Probes are locked in place with the locking wheel. **Never turn from the probe body.**
2 Probe connection cables are connected in the same way as probes: insert the cable in the connector and hold in place while turning the locking wheel.
3 Probes are inserted into the probe connector with the Vaisala logo facing out.

1. Insert the probe into the probe connector with the Vaisala logo on the probe body facing out. Note the orientation of the cable connector pins when inserting.
2. Hold the probe in the probe connector and lock it in place by turning the locking wheel **counterclockwise**. Never turn the probe body when connecting or removing probes, only the locking wheel of the transmitter.
3. If no previous configuration exists (that is, this is the first time a probe is connected to the transmitter, and no configuration has been set manually), the transmitter adapts the analog output settings of the connected Vaisala Indigo-compatible probe automatically.

> If a configuration that differs from the connected probe's configuration exists in the transmitter, you must configure the new probe manually to enable the analog output.

4. When the transmitter recognizes the connected probe, it shows a notification message on the display (for example, **Probe Connected: GMP251**). In the non-display model, a green LED is lit when the transmitter recognizes the probe.

6.1.3 Analog output configuration overview

The transmitter has 3 analog outputs that can be configured with the Insight PC software. Each output has the same set of configuration options in the analog output 1–3 menus under the **Configure device** menu (**Analog output 1** shown in example).

> The available selections depend on the probe that is connected to the transmitter (for example, CO_2 output parameter selection is only available for CO_2 probes).

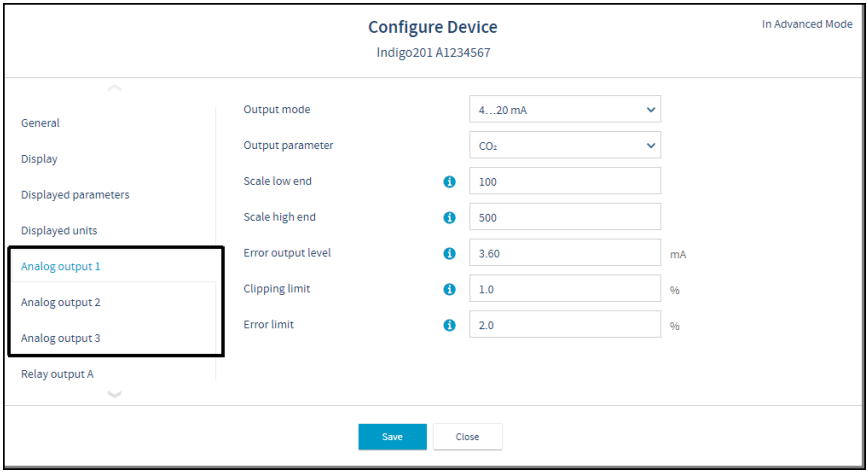

Figure 18 Analog output configuration options example in Insight

The **Analog output type** selection in the **General** menu defines whether the outputs are used for voltage or current output. When you change the output type, Insight reloads the transmitter.

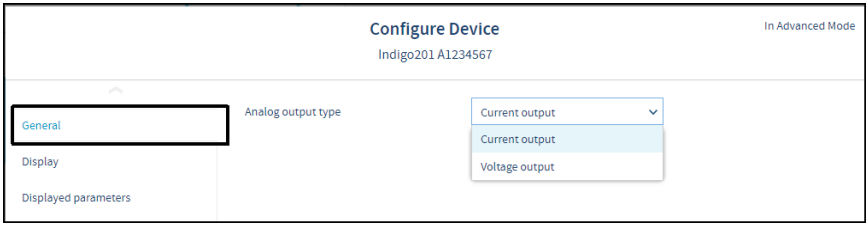

Figure 19 Analog output type (current or voltage) selection in Insight

Receiving analog output settings automatically from probe

The transmitter can receive the analog output settings automatically from the connected probe in the following cases:

1. The transmitter is a new unit and has not been configured yet.
2. The user has removed the analog output configuration from the transmitter.

> It is recommended to always review the analog output settings with the Insight PC software after connecting a probe.

6.1.3.1 Analog output configuration example

- 4–20 mA current output

1. Connect the transmitter to the Insight software.
2. Select and open the **Configure device** menu.
3. Open the **General** menu and select **Current output** from the dropdown. Store your selection with **Save**.
4. Return to the **Configure device** menu and select one of the 3 analog outputs.
5. Select **4 ... 20 mA** from the **Output mode** dropdown.
6. Type **0** in the **Output low end** field.
7. Type **3.6** in the **Error output level** field.
8. Select **Save** to take your configuration into use.

6.1.4 Modbus overview

Indigo202 supports the Modbus RTU serial communication protocol (2-wire RS-485 interface).

There are 2 groups of Modbus register addresses in use in Indigo202: probe registers and Indigo registers. The probe registers are received from the connected probe, and are organized according to the probe's register map. Indigo registers include transmitter-specific information.

Table 6 Indigo202 Modbus registers

Address	Name	Data type
Probe registers (according to the connected probe's register map) [1)]		
0x0000	First measurement probe address	
0xDFFF	Last measurement probe address	
Indigo registers		

Address	Name	Data type
0xE000	Status	16-bit
0xE001	Notification and error bits	16-bit
0xE002	Connected probe	text [30]
0xE011	Relay A status	enum
0xE012	Relay B status	enum

1) See the connected probe's Modbus documentation for probe-specific register information

Received Modbus requests for register operations are handled in two different ways, depending on whether the register is a probe register or an Indigo transmitter register. Addresses above 0xDFFF (that is, Indigo registers) are handled as normal requests. Lower addresses (that is, probe registers 0x0000–0xDFFF) are passed to the measurement probe, and the response from the probe is again passed to the original Modbus client. Indigo can also have a cache for commonly requested registers (Measurement registers).

The maximum response delay is 2 seconds (when the data content needs to be fetched from the probe). The minimum delay between requests is 10 ms.

6.1.4.1 Default communication settings

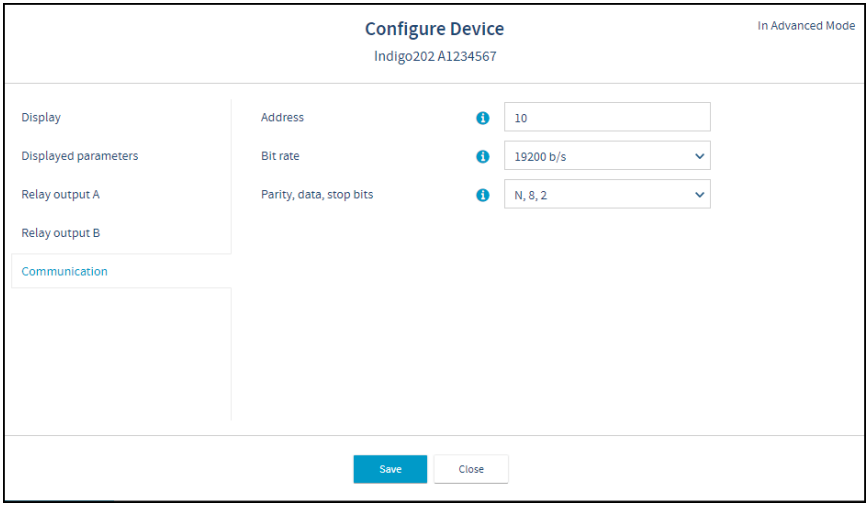

Figure 20 Insight PC software Communication menu view

Modbus communication settings can be configured in the Insight PC software **Configure device > Communication** menu.

Table 7 Default Modbus serial communication settings

Description	Default value
Serial bit rate	19200
Parity	None
Number of data bits	8
Number of stop bits	2
Modbus device address	10

6.1.5 Relay configuration overview

Indigo200 transmitters have 2 configurable relays (relay A and relay B). Both relays have configuration options for selecting the parameter that is used to control the relay, activation triggers, hysteresis, and error state behavior.

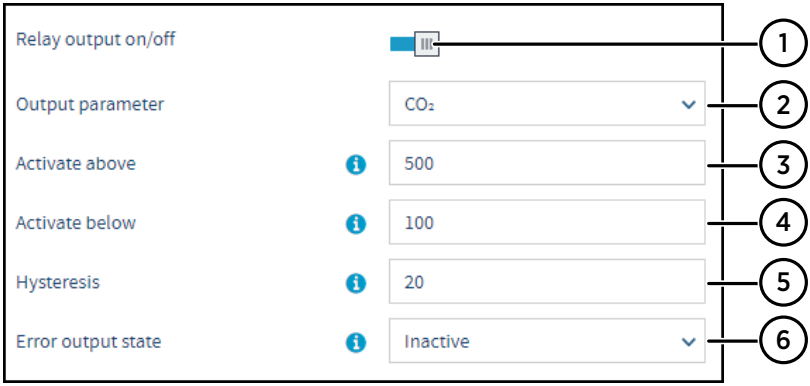

Figure 21 Relay configuration options (CO2 probe example)

1 **Relay output on/off**: Set to **ON** to enable relay output.
2 **Output parameter**: The measurement that is used to control the relay. Options vary based on the type of the connected probe.
3 **Activate above**:
When the measurement value exceeds the value set here, the relay activates.
4 **Activate below**:
When the measurement value falls below the value set here, the relay activates.
5 **Hysteresis**: Define a buffer value for relay deactivation (set the value according to the parameter selected for the relay). With hysteresis, an activated relay switches off only when the measured value crosses the relay activation/deactivation limit and the additional buffer value.
6 **Error output state**: Select which state the relay is set to when an error occurs (on, off, or remains in its current state).

Relay state information

When one or both relays are enabled, the relay state (active/not active) is shown on the transmitter display. You can also view the status of the relays with Insight PC software.

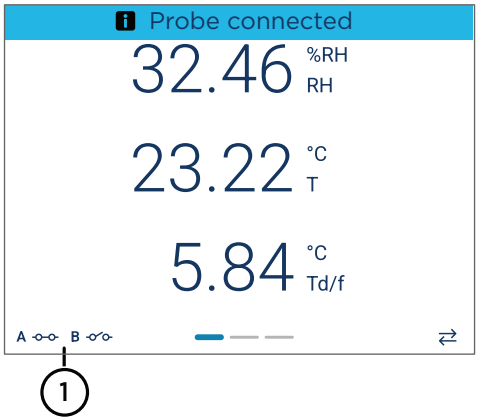

Figure 22 Relay icons on display (relay A active, relay B not active)

6.1.6 Configuring filtering factor with Insight

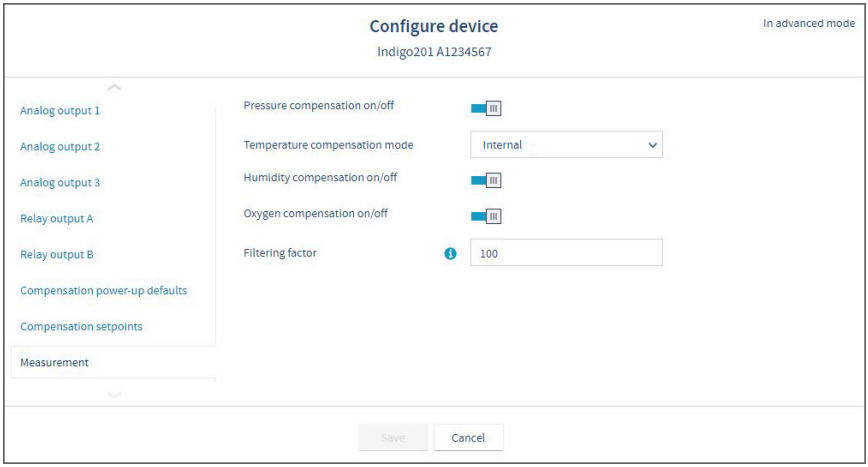

Figure 23 Filtering factor setting in Insight

The filtering factor affects the speed at which the latest measurement is integrated into the output of the probe: a new measurement is produced approximately every two seconds. You can configure the filtering factor in Insight PC software by selecting ⚙ > **Configure device > Measurement**. The option is available only in **Advanced mode** of Insight.

By default, the filtering factor is set to 1.0 (1.0 = 100 in the configuration range of the Insight user interface), which means the latest measurement is shown directly in the output, without any filtering. To apply filtering, enter a lower filtering factor to include previous measurements in the calculation of measurement output. For example, changing the filtering factor to 0.1 results in an output that is a combination of previous measurements (90 %) and the latest measurement (10 %).

The configuration range of the filtering factor is 0–100: for example, to set the factor to 0.5, set the value to 50 in the **Filtering factor** field.

6.2 Connecting probe to Indigo300 transmitter

Indigo300 transmitters have a probe connector where compatible probes can be attached directly. A cable may also be used to connect the probe. Cables are available to order at store.vaisala.com.

CAUTION! The IP classification of probes is valid only when the probes are connected to the probe connection cable, or to the cable connector inside the locking wheel of the transmitter.

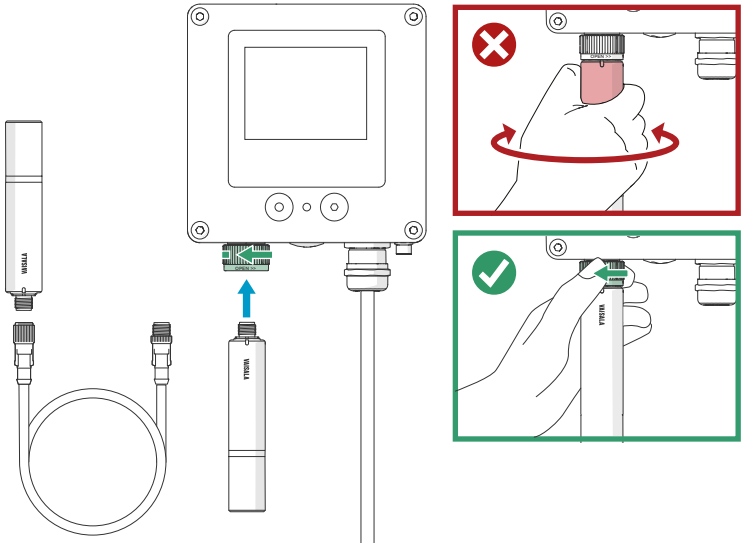

Figure 24 Connecting probe to Indigo300 transmitter

1. Insert the probe or the cable into the transmitter's connector.
2. Turn the locking wheel of the transmitter to lock the probe or cable in place. **Do not turn the probe or the cable itself**, as that will damage the connectors.
3. If you are using a cable, connect the probe to the cable.
4. When the transmitter recognizes the connected probe, it shows a notification message on the display.

6.3 Connecting probes to Indigo500 series transmitters

CAUTION! The IP classification of probes is valid only when the probes are connected to the probe connection cable.

If your transmitter was delivered with preconfigured analog outputs, make sure that you connect the measurement devices accordingly.

Probes are connected to Indigo500 series transmitters using a cable. Connections are made to the screw terminals inside the housing. The Indigo520 model allows 2 probes to be connected. After connecting a probe, use the touchscreen interface or the web user interface to configure the transmitter.

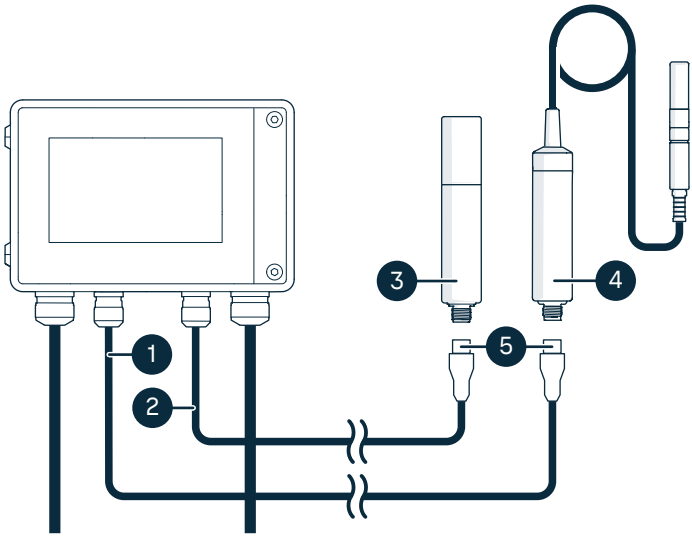

Figure 25 Connecting probes to Indigo500 transmitter

1 Probe connection cable for probe 1
2 Probe connection cable for probe 2 (dual-device support in Indigo520)
3 Probe to be connected as probe 2 (GMP252 example)
4 Probe to be connected as probe 1 (HMP7 example)
5 Probe cable connector (M12 5-pin A-coded female)

7. Using GMP252 with Indigo80 handheld indicator

7.1 Indigo80 handheld indicator

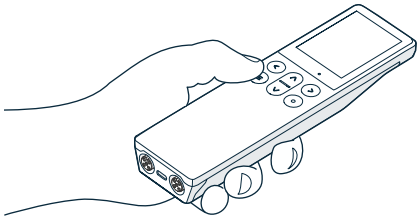

Figure 26 Indigo80 handheld indicator

Vaisala Indigo80 Handheld Indicator is a portable diagnostics tool that accommodates up to two compatible Vaisala devices for measuring a wide range of parameters.

With the indicator, you can:

- See real-time measurements and device and status information
- Log measurement data
- Calibrate and adjust the probe
- Configure probe features and settings such as compensation setpoints, filtering factor, and serial communication. The available features and settings depend on the probe model and firmware version.

Accessing certain configuration options for your probe is possible only using the free Insight PC software, downloadable at vaisala.com/insight.

The help tours in the indicator's user interface guide you through the key features of the indicator. You can access the tours in the **Help** menu by pressing the ☰ button.

For more information on using the indicator, for example, editing the measurement views and performing data logging, see Indigo80 User Guide (M212722EN).

More information

- Configuring probe features with Indigo80 handheld indicator (page 53)
- Configuring environment settings with Indigo80 handheld indicator (page 55)

7.1.1 Probe compatibility

The Indigo80 handheld indicator is tested for compatibility with probes that have firmware version 1.3.7 or newer.

Probes with older firmware versions may have limited compatibility with the indicator.

For the most up-to-date version compatibility information, see Firmware version compatibility of Indigo80-compatible devices Technical Note (M212901EN).

7.1.2 Indigo80 keypad

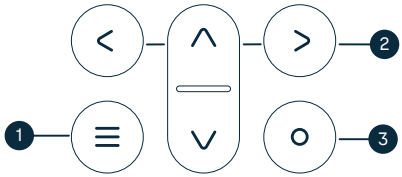

Figure 27 Indigo80 keypad

1 Power on/off and main menu button
2 Arrow buttons for navigating menus and scrolling views
3 Select button for selecting items in the user interface

7.1.3 Indigo80 main menu

Pressing the button while navigating the Indigo80 menus and views opens the main menu.

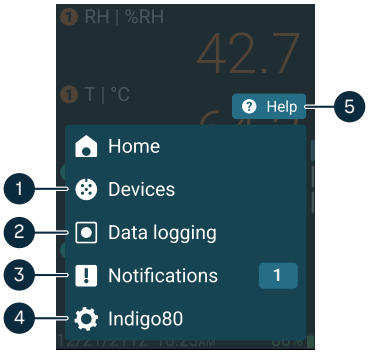

Figure 28 Indigo80 main menu

1 **Devices** menu contains, for example, options related to sensor purge, calibration, and environment settings (depending on the connected device).
2 **Data logging** menu for setting logging interval and duration, and browsing data files.
3 **Notifications** menu displays notifications related to Indigo80 and the connected devices.
4 **Indigo80** menu for changing the settings of Indigo80 (for example, date, time, and language) and viewing device information.
5 **Help** menu contains tours showing the key features of Indigo80, as well as instructions for sending devices to Vaisala for calibration and maintenance.

7.2 Connecting probes to Indigo80

- Probe connection cable (M12-M12, Vaisala item code 272075SP)

Up to two Vaisala Indigo-compatible measurement devices can be connected to the ports located on the bottom of Indigo80. You can connect and disconnect devices both when the indicator is powered on and when it is off.

Vaisala recommends using cables provided by Vaisala when connecting devices to the indicator. Cables and other accessories are available to order at store.vaisala.com.

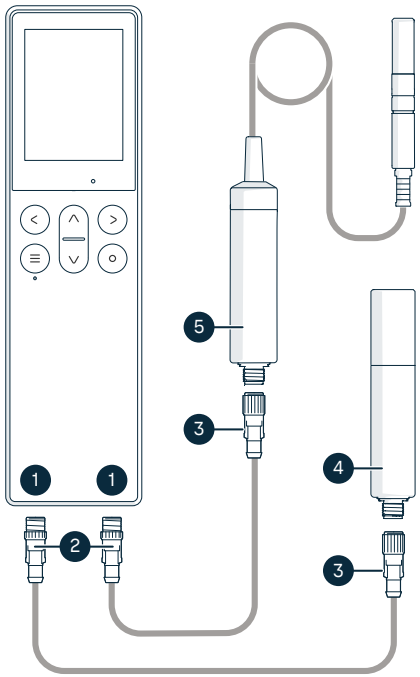

Figure 29 Example of connecting probes to Indigo80

1 M12-5F ports on the bottom of Indigo80 for connecting compatible Vaisala devices. Ports are labeled ❶ (left) and ❷ (right) on Indigo80.
2 M12-5M cable connector
3 M12-5F cable connector
4 Probe displayed as ❶ by Indigo80 (GMP252 shown)
5 Probe displayed as ❷ by Indigo80 (HMP7 shown)

1. If the indicator is powered and no devices are connected to it, the text **Please connect a measurement device** will be shown on the display.

2. Insert the probe connection cable in one of the ports on the bottom of the indicator.
   - **Note the orientation of the cable connector when inserting it**
   - **Hold the connector in place while turning its locking ring clockwise – never twist the connector body!**

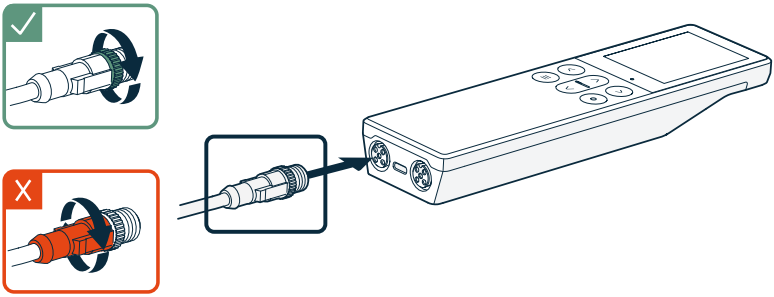

3. Connect the probe to the M12-5F end of the probe connection cable.

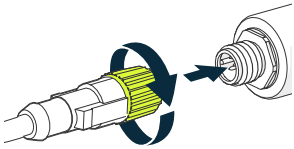

   When the indicator recognizes the connected probe, it shows a notification on the display. A probe connected to the leftmost port in the indicator is labeled ❶ on the indicator's display, while the probe in the rightmost port is labeled ❷.

4. To change probes, simply detach the cable from the probe and connect a new probe.

For optimal measurement accuracy, the indicator guides you to check the connected probe's environment settings next.

7.3 Configuring probe features with Indigo80 handheld indicator

- Probe connection cable (M12-M12, Vaisala item code 272075SP)

You can use the Indigo80 handheld indicator to configure probe features such as compensation setpoints, filtering factor, and serial communication. The available features depend on the probe model and firmware version.

Accessing certain configuration options for your probe is possible only using the free Insight PC software, downloadable at vaisala.com/insight.

1. Connect the probe(s) to the indicator.
2. Open the indicator main menu by pressing ☰.
3. Select **Devices**. If you have more than one device connected to the indicator, make a further selection between the devices.
4. Select **Settings** to access and change the features available for your probe.
5. Exit the menu by pressing ⮜ or return to the main menu by pressing ☰.

7.3.1 Example of configuring filtering factor with Indigo80 handheld indicator

- Probe connection cable (M12-M12, Vaisala item code 272075SP)

The filtering factor allows averaging the output if the measuring environment produces occasional exceptionally high or low readings.

This example shows how to configure the filtering factor as **90** using the Indigo80 handheld indicator.

This means that the new measurement output is a combination of the latest measurement (90 %) and the previous measurement (10 %).

1. Connect the probe(s) to the indicator.
2. Open the indicator main menu by pressing ☰.
3. Select **Devices**. If you have more than one device connected to the indicator, make a further selection between the devices.
4. Select **Settings > Measurement**.
5. Select **Filtering factor**.
   a. Use the arrow buttons to set the value as **90**.
   b. Select **Set**.
6. Exit the menu by pressing ⮜ or return to the main menu by pressing ☰.

7.4 Configuring environment settings with Indigo80 handheld indicator

- Probe connection cable (M12-M12, Vaisala item code 272075SP)

For optimal measurement accuracy, you can use the Indigo80 handheld indicator to give additional information about the connected probe's measurement environment.

For example, you can:

- Configure the pressure compensation setting for your probe
- Enable temperature compensation from another Indigo-compatible probe that has a temperature output

The environment settings available through Indigo80 correspond to the environmental compensation settings of the probe. Therefore, **Environment settings** and **Settings > Compensation setpoints** are interconnected: the configuration set in either menu is applied to both.

1. Connect the probe(s) to the indicator.
2. Open the indicator main menu by pressing ☰.
3. Select **Devices**. If you have more than one device connected to the indicator, make a further selection between the devices.
4. Select **Environment settings** to access the settings for your probe.

   The available environment settings depend on the probe and probe firmware version.

   Pressure
   Temporary value for pressure compensation. At device restart, compensation value changes back to power-up default value.

   Temperature
   Temporary value for temperature compensation. At device reset, compensation value changes back to the power-up default value.

   Relative humidity
   Temporary value for relative humidity compensation. At device reset, compensation value changes back to the power-up default value.

   Oxygen concentration
   Temporary value for oxygen concentration compensation. At device reset, compensation value changes back to the power-up default value.

5. Select a setting from the list, for example, **Pressure**.
   a. Select the unit, if prompted.
   b. Use the arrow buttons to set the desired value, and then select **OK** or **Set**.

      You can also select to read the value from another probe connected to the indicator, provided that the probe can output the required compensation parameter. Press ⊂ to highlight the **Read value from** field, and then press ⊙ to select the other probe as the source of the value.
6. Scroll down the **Environment settings** view and check that the compensation settings corresponding to the environment settings you defined in the previous steps are set to **On**.

   For example:
   - If you set a value for **Pressure**, make sure that **Pressure compensation on/off** is set to **On** as well.
   - If you set a value for temperature, make sure that **Temperature** is set to **Setpoint**.
7. Exit the menu by pressing ⊂ or return to the main menu by pressing ☰.

More information

‣ Environmental compensation (page 20)

8. Operating with MI70 indicator

8.1 Overview of MI70 support

The GMP252 probe is compatible with instruments that utilize the MI70 indicator, for example the GM70 Handheld Carbon Dioxide Meter. The MI70 indicator is a convenient service tool for viewing the measurement readings and performing calibration and 1-point adjustment.

> When MI70 is used with GMP252, it is recommended to use the rechargeable battery pack instead of alkaline batteries due to the relatively high power usage in CO_2 measurement.

8.1.1 Probe warm-up and MI70 automatic power off

Note that the probe's warm-up time to full accuracy specification when starting up the probe can be several minutes. When you power the probe with the MI70 indicator, disable the automatic power off feature of MI70 to keep the probe powered on continuously in order to avoid probe restart. To ensure powering during measurements, it is recommended to use the MI70 charging adapter when possible.

8.2 Basic display

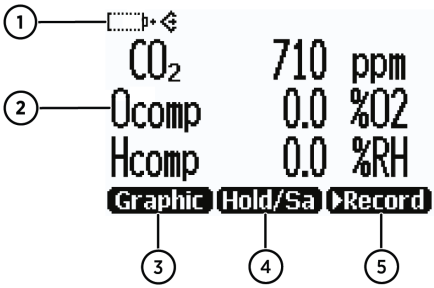

Figure 30 MI70 basic display

1. Measured parameter and compensations (up to three items on display simultaneously). You can change the shown items in **Main menu > Display > Quantities and units**.
2. Battery indicator. Shows current status (charge) of the battery.
3. Function key **Graphic** shows the readings as a curve.
4. Function key **Hold/Save** freezes the display and you can save the reading in the MI70 memory.
5. Function key **Record** is a quick access to the **Recording/Viewing** menu.

You can change the default function key shortcuts (**Graphic**, **Hold/Save**, **Record**) to other menus or functions in **Main menu > Settings > User interface > Program shortcut keys**.

8.3 Graphical display

The graphical display shows you the measurements as a curve (the curve of the uppermost parameter shown in the basic display). From the curve you can examine the data trend and history of the last minutes.

To open the graphical display, select **Graphic** in the basic display or select **Main menu > Display > Graphic history > Show**.

To get the statistical info on the graph area (minimum, maximum, and average values), press **Info**.

To get the curve of the other selected parameters, press **Next**. To get the curves of all the parameters, press **Next** until the text **All** appears, and then select **All**.

To zoom in and out, press the up/down arrow buttons.

To move back and forward in the timeline, use the left/right arrow buttons.

8.4 Main menu

In the main menu, you can configure the MI70 settings and basic display options, view information about the probe, access recordings and clear the memory, set alarms, start adjustments, and use the analog output option of the MI70 indicator.

To open the main menu and navigate in the menus:

1. Go to the basic display.
2. Press any arrow button, then select **Open** (must be pressed within 5 seconds or the indicator returns to the basic display).
3. Move in the menus using the buttons.
4. Select an item with the button.
5. To return to the previous level, press .
6. To return to normal operation, press **Exit**.

8.5 Connecting probe to MI70 indicator

1. If the probe is installed permanently into a device (for example, an incubator or a chamber), disconnect the probe from the connector.
2. If the MI70 indicator is on, turn it off.
3. Connect the probe to the MI70 indicator using the MI70 connection cable (Vaisala item code: CBL210472).
4. Turn on the MI70 indicator (time and date are requested at first startup). MI70 detects the probe and proceeds to show the measurement screen. The parameters measured by probe will start to show valid measurement results after a few seconds.

8.6 MI70 indicator parts

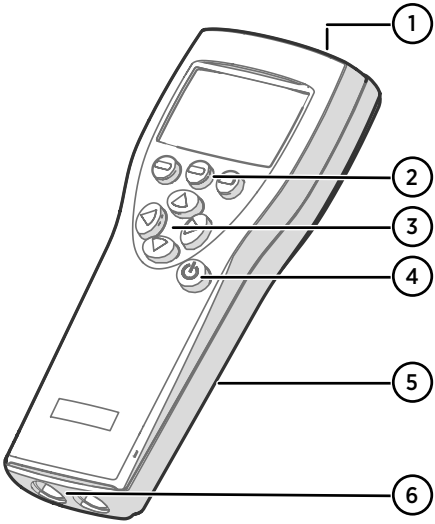

Figure 31 MI70 indicator parts

1 Charger socket
2 Function key shortcut buttons ⊖. The functions change according to what you are doing with the indicator.
3 Arrow buttons:
   - ▲ Move up in a menu
   - ▼ Move down in a menu
   - ▶ Enter a sub-menu
   - ◀ Return to previous menu level
4 Power On/Off button
5 Battery compartment at the back of the indicator
6 2 ports with M12 4-pin female connectors for connecting probes and instruments. The ports are labeled I and II.

To open menus, press an arrow button and then press the shortcut buttons. To activate a function shown above the shortcut button, press the shortcut button. To navigate in the menus, press the arrow buttons.

8.7 Holding and saving the display

With the **Hold/Save** function, you can freeze a certain display reading. This reading can be saved in the MI70 memory and it will be available even after MI70 is disconnected from the transmitter.

1. In the basic display, select **Hold/Save**. Alternatively, select **Main menu > Display > Hold/Save display > Hold**.
2. Press **Save**.
3. To view the saved display, go to basic display and select **Record > View recorded data**. Alternatively, select **Main menu > Recording/Viewing > View recorded data**.

   A list of saved displays and data recordings appears. The icons on the left of the date and time indicate whether the file is a saved display or a longer recording of data:

   Saved display

   Data recording

4. Select the saved display based on date and time by pressing the right arrow button.

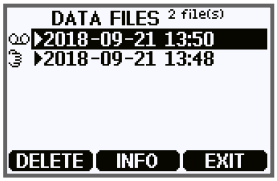

8.8 Recording data

With MI70, you can record transmitter measurement data over a certain period at chosen intervals. These recordings are saved in the MI70 memory and are available even after MI70 is disconnected from the transmitter. To start recording, select the **Record** function key in the basic display, or navigate to the recording menu: **Main menu > Recording/Viewing > Record data**.

8.9 Changing environmental compensation settings with MI70 indicator

You can see the compensation values that are currently used by the probe by selecting them as display quantities from **Main menu > Display > Quantities and Units**. The quantities are as follows:

- **Tcomp**: currently active temperature compensation value.
- **Pcomp**: currently active pressure compensation value.
- **Ocomp**: currently active oxygen concentration compensation value.
- **Hcomp**: currently active relative humidity compensation value.

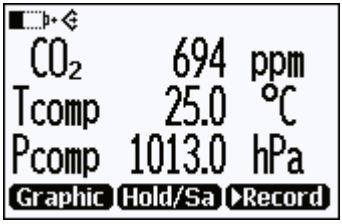

Figure 32 CO_2 reading with Tcomp and Pcomp on MI70 screen

You can change the compensation settings from **Main menu > Settings > Measurement settings**.

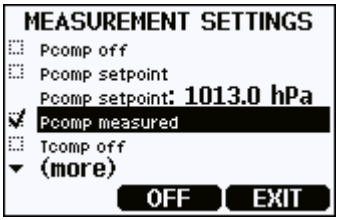

Figure 33 Probe compensation settings on MI70 screen

When you turn a compensation off, the probe still shows a value for the corresponding display quantity (for example, Pcomp shows 1013.2 hPa). This is the default compensation value that is mathematically neutral for the probe's internal compensation model.

GMP252 cannot receive the compensation values from a second probe connected to MI70. Only direct configuration is supported.

9. Vaisala Industrial Protocol

9.1 Vaisala Industrial Protocol overview

The RS-485 line of the probe provides an implementation of the Vaisala Industrial Protocol that can be used for service and configuration use, or for interfacing with the system to which the probe is integrated. The protocol is a plaintext protocol suitable for use both by human operators and automated systems.

9.2 Serial interface settings

Table 8 Default serial interface settings

Property	Description/Value
Bit rate	19200
Parity	None
Data bits	8
Stop bit	1
Flow control	None

9.3 Physical interface

The physical interface is a non-isolated 2-wire interface. The data lines are RS-485 D- and RS-485 D+. Ground is shared with power supply. The connector is a 5-pin male M12.

More information

- Wiring (page 34)

9.4 Connecting with a computer

- Vaisala USB service cable (item code 242659)
- Computer with:
  - Windows operating system
  - Terminal application (for example PuTTy, available from vaisala.com/software)
  - Free USB port
  - Driver for Vaisala USB service cable installed (available on the cable installation media and at vaisala.com/software)

The steps below describe how to connect to the probe using the PuTTY terminal application for Windows and a USB computer connection cable. Connecting with a computer allows you to configure and troubleshoot your probe using serial line commands.

1. If you have not used the Vaisala USB cable before, install the driver before attempting to use the cable.
2. Connect the USB serial interface cable between your computer and the M12 connector of the probe.
3. Start the PuTTY application.
4. Select **Connection > Serial & USB** and check that the correct COM port is selected in the **Serial or USB line to connect to** field. If you are using the PuTTY terminal application supplied by Vaisala, you can press the **USB Finder** button to open the Vaisala USB Instrument Finder program.
5. Check that the other serial settings are correct for your connection, and change if necessary. **Flow control** should be set to **None** unless you have a reason to change it.

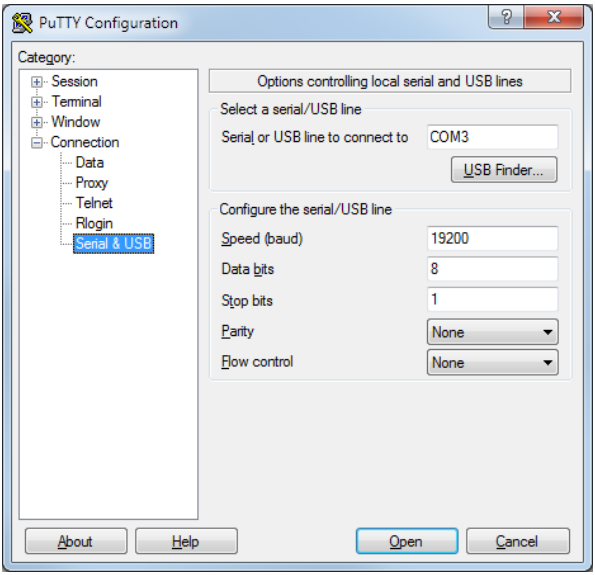

6. Select **Terminal**. Use the following settings:

   Local Echo: Select **Force on**. This setting ensures that your typing is shown on the session window.

> **CAUTION!** Make sure that the **Send line ends with line feeds (CR+LF)** option is not selected. Enabling this option can cause issues with the terminal connection.

7. To open the connection window and start using the serial line, select **Open**.

> If PuTTY is unable to open the serial port you selected, it shows you an error message instead. If this happens, restart PuTTY and check the settings.

More information

- Serial interface settings (page 62)
- Installing driver for the USB service cable (page 64)

9.4.1 Installing driver for the USB service cable

> Only Windows® operating systems are supported by the driver of the USB service cable.

1. Connect the USB service cable to a USB port on your computer. Windows® detects the new device and installs the appropriate driver.
2. Open **Device Manager** from the Windows® Start menu. Use search to find it if necessary (search for "device").
3. Locate the cable in the list of devices:
   - If the device is listed as **Vaisala USB Device** with a COM port number in brackets, the cable is ready for use.
   - If the device is listed as **Vaisala USB Instrument Cable** without a COM port number listed, you must install the driver manually.

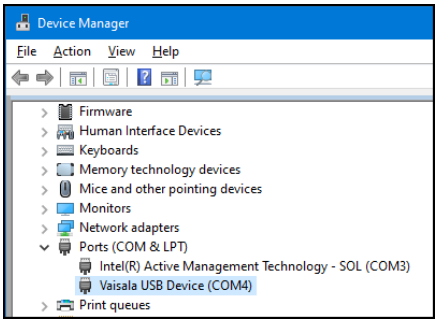

4. To install the driver manually:
   a. Disconnect the USB service cable from the computer.
   b. Download the Vaisala USB driver at vaisala.com/software (select the appropriate USB Instrument Driver Setup for your cable).
   c. Extract the driver zip file and run the USB driver installation program *`Vaisala USB Device Driver Setup.exe`*. Accept the installation defaults.
   d. Go back to step 1 and verify that the driver installation works as expected.

9.5 Accessing serial commands from Modbus or analog mode

1. Connect the USB cable to your PC and start the terminal application as instructed in Connecting with a computer (page 62).
2. Start a new terminal session using the default serial settings.
3. Keep the Enter key pressed down and connect the probe to the USB cable.

   When the probe is powered on (connected to your PC with the USB cable), you must send five carriage returns (Enter key presses) within 0.7 seconds to force the probe to serial command mode. The probe model information appears in the terminal application when the mode has been successfully changed, and Vaisala Industrial Protocol commands are available for use.
4. To test the connection, enter for example the **?** command. If the mode change failed, close the terminal application, disconnect the probe from the USB cable, and repeat step 2 and step 3.
5. To keep the serial mode in use (forced serial mode access is temporary and switches off at reset), select a serial output option (stop/run/poll) with the **`smode`** command.

> Note that the probe always remains in analog mode when pin #5 is connected to pin #3, and cannot be switched to digital output in this wiring option.

More information

- Serial interface settings (page 62)
- Enabling Modbus mode from Vaisala Industrial Protocol (page 66)

9.6 Enabling Modbus mode from Vaisala Industrial Protocol

If you need to switch from Vaisala Industrial Protocol to Modbus mode, you must configure the following settings:

- Serial line operating mode
- Modbus address
- Serial line settings (bit rate, parity, stop and data bits)

1. Connect the USB cable to your PC and start the terminal application as instructed in Connecting with a computer (page 62).
2. Set the serial mode to Modbus with the **smode** command:

```
smode modbus
```

3. Set the Modbus address to 240 with the **addr** command:

```
addr 240
```

4. Set the serial line settings to 19200/N/8/2 with the **seri** command:

```
seri 19200 N 8 2
```

5. Power off (disconnect) the probe or reset with the **reset** command. The new configuration is available at the next restart.

More information

- Accessing serial commands from Modbus or analog mode (page 65)

9.7 Changing from digital output to analog output

1. Set up a terminal connection as instructed in Connecting with a computer (page 62).
2. Change the mode from digital to analog with the **smode** serial command: **smode analog**.
3. Reset the probe (disconnect and reconnect the cable or use the **reset** serial command) to power on in analog output mode.

More information

- Accessing serial commands from Modbus or analog mode (page 65)

9.8 Serial commands

The notation **<cr>** refers to the carriage return control character, which you can send in a terminal application by pressing enter on your keyboard. Before entering commands, send a **<cr>** to clear the command buffer.

You can enter the commands in uppercase or lowercase. In the command examples, the keyboard input by the user is in bold type.

Table 9 (page 67) lists the basic serial commands that are available by default. To access advanced serial commands (listed in Table 10 (page 68)), enter the command **pass 1300**.

Table 9 Basic serial commands

Command	Description
Device information and status	
?	Show probe information.
??	Show probe information (will respond in **POLL** mode).
errs	Show currently active errors.
help	Show list of currently available serial commands.
snum	Show probe serial number.
system	Show probe firmware information.
time	Show probe operation hours and uptime.
vers	Show probe firmware version.
Serial line output and communication	
close	Close connection to probe (**POLL** mode)
form [modifier string]	Show or set output format.
intv [0 ... 255 s/min/h]	Set continuous output interval for **R** command.
open [address]	Open connection to probe in **POLL** mode.
r	Start the continuous outputting.
s	Stop the continuous outputting.
sdelay [1 ... 255]	Show or set serial line transmission delay (1–255, 1 unit = 4 milliseconds)
send	Output a single measurement message.
seri [baud data stop parity]	Show or set the serial interface settings.
smode [mode]	Show or set startup serial mode: **RUN**, **STOP**, or **POLL**.

Command	Description
Environmental compensation	
`env`	Show or set environmental parameters.
Adjustment information	
`adate`	Show CO_2 factory adjustment date.
`atext`	Show CO_2 factory adjustment information.
Other commands	
`reset`	Reset the probe.
`pass [1300]`	Access advanced serial commands.

Table 10 Advanced serial commands

Command	Description
Serial line output and communication	
`addr` [0 ... 254]	Show or set probe address.
Analog output	
`amode`	Show or set analog output mode (analog output limits and error level).
`aover`	Show or set analog output overrange and clipping behavior.
`asel`	Show or set analog output parameter and scaling.
Calibration and adjustment	
`cco2`	Adjust CO_2 measurement gain and offset.
`cdate`	Show or set calibration date.
`ct`	Adjust temperature measurement offset.
`ctext`	Show or set calibration information.
Environmental compensation	
`o2cmode`	Show or set oxygen compensation mode.
`pcmode`	Show or set pressure compensation mode.
`rhcmode`	Show or set humidity compensation mode.
`tcmode`	Show or set temperature compensation mode.
Other commands	
`frestore`	Restore probe to factory settings.

9.9 Device information and status

Table 11 ? command

Syntax	Description
?<cr>	Show listing of device information.
??<cr>	Show listing of device information even if device is in poll mode and connection has not been opened using the **open** command.

Example:

```
?
Device : GMP25x
Copyright : Copyright (c) Vaisala Oyj 2016. All rights
reserved.
SW Name : GMP25x
SW version : 1.0.0
SNUM : GMP233_5_18
SSNUM : S1234567
CBNUM : c1234567
Calibrated : 20160504 @ Vaisala/R&D
Address : 0
Smode : STOP
```

Table 12 errs command

Syntax	Description
errs<cr>	Show active error(s). For a list of possible errors and their remedies, see Error messages (page 115).

Example (no active errors):

```
errs
NO CRITICAL ERRORS
NO ERRORS
NO WARNINGS
STATUS NORMAL
```

Table 13 help command

Syntax	Description
help<cr>	Show list of currently available serial commands.

Syntax	Description
Example (showing a list of the basic commands):	

```
help
ADATE
ADDR
ATEXT
CLOSE
ENV
ERRS
FORM
HELP
INTV
PASS
RR
ESET
RX
SDELAY
SEND
SENDX
SERI
SMODE
SNUM
SYSTEM
UNIQID
TIME
VERS
```

Table 14 snum command

Syntax	Description
snum<cr>	Show serial number of the probe.
Example:	

```
snum
SNUM : M0220028
```

Table 15 system command

Syntax	Description
system<cr>	Show probe firmware information.
Example:	

```
system
Device Name : GMP25x
SW Name : GMP25x
SW version : 1.0.0
Operating system : TSFOS1.0
```

Table 16 time command

Syntax	Description
time<cr>	Show how long the probe has been in operation since the last startup or reset. The operation counter is in format hh:mm:ss.

Example:

```
time
Time : 01:41:24
```

Table 17 vers command

Syntax	Description
vers<cr>	Show firmware version of the probe.

Example:

```
vers
SW version : 1.0.0
```

9.10 Serial line output and communication

Table 18 addr command

Syntax	Description
addr<cr>	Show current device address. Addresses are required for **POLL** mode.
addr [aaa]<cr>	Set new device address. **aaa** = address, 0 ... 254 (default = 240)

Example (shows 0 as current address, enter 5 as the new address):

```
addr
Address : 0
addr 5
Address : 5
```

Table 19 close command

Syntax	Description
close<cr>	Close the connection that was opened with the **open** command.

Example:

```
close
line closed
```

Table 20 form command

Syntax	Description
form<cr>	Show the currently used measurement format.
form /<cr>	Reset measurement format to default.
form [sss]<cr>	Set a new measurement format. **sss** = String consisting of modifiers and abbreviations for measured parameters. See Table 19 on the facing page and Table 20 on the facing page. Maximum length is 150 characters. Maximum length may be shorter when text strings are used.

Example (show currently used measurement format (default format shown here)):

```
form
6.0 "CO2=" CO2 " " U3 #r #n
```

Output example (continuous output from RUN mode):

```
CO2= 452 ppm
```

Example (set output format as %CO_2):

```
form 3.1 "CO2=" CO2% " " U4 #r #n
OK
```

Output example (continuous output from RUN mode):

```
CO2= 5.1 %CO2
CO2= 5.1 %CO2
CO2= 5.0 %CO2
...
```

Syntax	Description

Example (set output format as CO_2 ppm with Modulus-65536 checksum):
`form 6.0 "CO2=" CO2 " " U3 " " CS4 #r #n`
`OK`
Output example (continuous output from RUN mode):
`CO2= 3563 ppm 9F`
`CO2= 3562 ppm 9E`
`CO2= 3559 ppm A4`
`...`	

Example (set output format as CO_2 ppm, with **start of text** (ASCII character 002) and **end of text** (003) ASCII codes, and without line feed and carriage return at the end):
`form #002 6.0 "CO2=" CO2 " " U3 #003`
`OK`
Output example (continuous output from RUN mode, ASCII codes not visible here):
`CO2= 866 ppm CO2= 866 ppm CO2= 867 ppm CO2= 867 ppm`
`CO2= 867 ppm CO2= 868 ppm CO2= 868 ppm CO2= 869 ppm`
`...`	

Table 21 Output parameters for form command

Output parameter	Abbreviation in form command
Carbon dioxide in ppm	**`co2`**
Carbon dioxide in percent	**`co2%`**
Currently used temperature compensation value	**`tcomp`**
Currently used pressure compensation value	**`pcomp`**
Currently used oxygen concentration compensation value	**`o2comp`**
Currently used relative humidity compensation value	**`rhcomp`**

Table 22 Modifiers for form command

Modifier	Description
`x.y`	Length modifier (number of digits and decimal places).
`#t`	Tabulator.

Modifier	Description
#r	Carriage-return.
#n	Line feed.
""	String constant, length 1 ... 15 characters.
#xxx	ASCII code value (decimal) of a special character; for example, #027 for ESC.
addr	Probe address (0 ... 254).
sn	Probe serial number.
time	Cumulative operating hours of the probe.
ux	Name of the measurement unit using x number of characters. For example, **u3** shows the name of the measurement unit with three characters.
cs4	Modulus-65536 checksum of message sent so far, ASCII encoded hexadecimal notation.
csx	NMEA xor-checksum of message sent so far, ASCII encoded hexadecimal notation.

You can also use the backslash character \ instead of the hash character #.

Table 23 intv command

Syntax	Description
intv<cr>	Show the output interval of the automatically repeating measurement messages (**r** command and run mode).
intv [iii uuu]<cr>	Set the output interval. iii = interval, range 0 ... 255. u = unit for interval setting: • s = seconds • min = minutes • h = hours If you set the interval to 0, the output messages are output as quickly as they are generated, without additional delay.

Syntax	Description

Example:
`intv 5 s`
`Output interval: 5 S`	

Table 24 open command

Syntax	Description
open [aaa]<cr>	Open a connection to a device at the specified address. Required when device is in poll mode. **aaa** = address, range 0 ... 254.

Example (target probe in POLL mode, with address 52):
`open 52`
`GMP25x: 52 Opened for operator commands`	

Table 25 r command

Syntax	Description
r<cr>	Start the continuous outputting of measurement values as an ASCII text string to the serial line. The probe keeps outputting measurement messages at the interval that has been set with the **intv** command until stopped with the **s** command.

Example:
`r`
`CO2= 1024 ppm`
`CO2= 1024 ppm`
`CO2= 1028 ppm`
`CO2= 1026 ppm`
`CO2= 1028 ppm`
`...`	

Table 26 s command

Syntax	Description
s<cr>	Stop the continuous outputting that was started with the **r** command.

Syntax	Description

Example:
`...`
`CO2= 658 ppm`
`CO2= 654 ppm`
`CO2= 655 ppm`
`s`	

Table 27 sdelay command

Syntax	Description
sdelay<cr>	Show serial line transmission delay (1 ... 255). 1 unit = 4 milliseconds (for example, 5 = 0.020 second transmission delay).
sdelay [delay]<cr>	Set a new serial line transmission delay. **delay** = Serial line delay, range 1 ... 255 (1 unit = 4 ms).

Example (set delay to 0.1 seconds = 25 units):
`sdelay 25`
`COM transmit delay : 25`	

Table 28 send command

Syntax	Description
send<cr>	Output a single measurement message.
send [aaa]<cr>	Output a single measurement message from a device in poll mode. **aaa** = address of the probe, range 0 ... 254

Example:
`send`
`CO2= 1422 ppm`	

Example (target probe in **POLL** mode, with address 52):
`send 52`
`CO2= 458 ppm`	

Table 29 seri command

Syntax	Description
seri<cr>	Show current serial line settings.
seri [b p d s]<cr>	Set new serial line settings. The new settings will be taken into use when the probe is reset or powered up. **b** = baud rate (9600, 19200, or 38400) **p** = parity • **n** = none • **e** = even • **o** = odd **d** = data bits (7 or 8) **s** = stop bits (1 or 2) For Modbus, baud rate must be 9600 ... 38400 and parity must be none.

Example (show current settings):

```
seri
Com1 Baud rate : 19200
Com1 Parity : N
Com1 Data bits : 8
Com1 Stop bits : 1
```

Example (set serial line to 9600 baud, even, 7 data bits, and 1 stop bit, and reset the probe to take the new settings in use):

```
seri 9600 e 7 1
OK
seri
Com1 Baud rate : 9600
Com1 Parity : E
Com1 Data bits : 7
Com1 Stop bits : 1
reset
GMP25x 1.0.0
```

Table 30 smode command

Syntax	Description
smode<cr>	Show current start-up operating mode of the serial line, and prompt to enter new mode.

Syntax	Description
smode [mode]<cr>	Set serial line start-up operating mode. New mode is taken into use when the device is reset or powered up. Available modes: **stop** = No automatic output. All commands available. Default mode. **run** = Automatic output of measurement messages. You can stop the output with the **s** command, and recontinue with the **r** command. **poll** = No automatic output. Will respond to addressed **send** command and **??** command. You can use other commands after opening a connection using an addressed **open** command. Use with RS- 485 buses where multiple probes can share the same line. **modbus** = Serial line communication uses the Modbus protocol. Serial line commands (Vaisala Industrial Protocol) are not accessible in the Modbus mode. **analog** = Switches the probe from digital output to analog output (active after probe reset). Serial line commands are not accessible in the analog mode.
Example (set serial mode to "poll"): **smode poll** Serial mode : POLL	

9.11 Analog output

Table 31 amode command

Syntax	Description
amode [channel]<cr>	Show currently set analog output limits and error level. **channel** = Analog output channel • 1 = voltage output (V) • 2 = current output (mA)

Syntax	Description
amode [channel lo_value hi_value error_value]<cr>	Set new analog output limits and error output value. **channel** = Analog output channel • 1 = voltage output (V) • 2 = current output (mA) **lo_value** = Low limit of the channel. **hi_value** = High limit of the channel. **error_value** = Error value of the channel. When setting the error output voltage, note that the probe's maximum voltage output is 10.325 V.

Example (show current configuration):

```
pass 1300
amode 1
Aout 1 range (V) : 0.00 ... 10.00 (error : 0.00)
amode 2
Aout 2 range (mA) : 4.00 ... 20.00 (error : 2.00)
```

Example (set channel 1 to 0 ... 5 V, and error output to 0.0 V; set channel 2 to 0 ... 20 mA, and error output to 23 mA):

```
amode 1 0 5 0.0
Aout 1 range (V) : 0.00 ... 5.00 (error : 0.00)
amode 2 0 20 23
Aout 2 range (mA) : 0.00 ... 20.00 (error : 23.00)
```

Table 32 aover command

Syntax	Description
aover [channel<cr>	Show the behavior of the analog output when the measured value is outside the scaled output range. **channel** = Analog output channel • 1 = voltage output (V) • 2 = current output (mA)

Syntax	Description
aover [channel clipping error_limit]<cr>	Set the behavior of the analog output when the measured value is outside the scaled output range. **channel** = Analog output channel • 1 = voltage output (V) • 2 = current output (mA) **clipping** = Output margin (%) at which the output is clipped. **error_limit** = Measurement value margin (%) at which the output of the channel goes into the error state. The current or voltage output of the error state is defined using the **amode** command.

Example (view currently set analog output overrange behavior on channel 1):

```
pass 1300
aover 1
Aout 1 clipping :5.00 %
Aout 1 error limit :10.00 %
```

Syntax	Description

Example (for channel 1):

1. View currently set analog output scaling (**asel** command), limits and error level (**amode** command), and overrange behavior (**aover** command):

```
pass 1300
asel 1
Aout 1 quantity : CO2(0 ... 2000)
amode 1
Aout 1 range (V) : 0.00 ... 5.00 (error : 0.00)
aover 1
Aout 1 clipping :1.00 %
Aout 1 error limit :5.00 %
```

2. Set analog output overrange clipping to 5 % and error limit to 10 %:

```
aover 1 5 10
Aout 1 clipping : 5.00 %
Aout 1 error limit : 10.00 %
```

The analog output now behaves like this:

- Clipping is now set to 5.00 %, meaning the voltage output is allowed to vary between 0 ... 5.25 V. The analog channel will output the measurement for 0 ... 2100 ppmCO_2, but range 0 ... 5 V remains scaled to 0 ... 2000 ppmCO_2.
- Error limit is 10 %, which means the output will show the error state (0 V) when the measured CO_2 concentration is 10 % outside the scaled output range. With the settings above, this will happen if the measured CO_2 concentration is outside range 0 ... 2200 ppmCO_2.
- The voltage output will never be above 5.25 V because of clipping: the voltage output is clipped when the output reaches 5.25 V, and if the measured CO_2 concentration keeps rising above 2200 ppmCO_2, the output jumps directly to the error state 0 V.

Syntax	Description

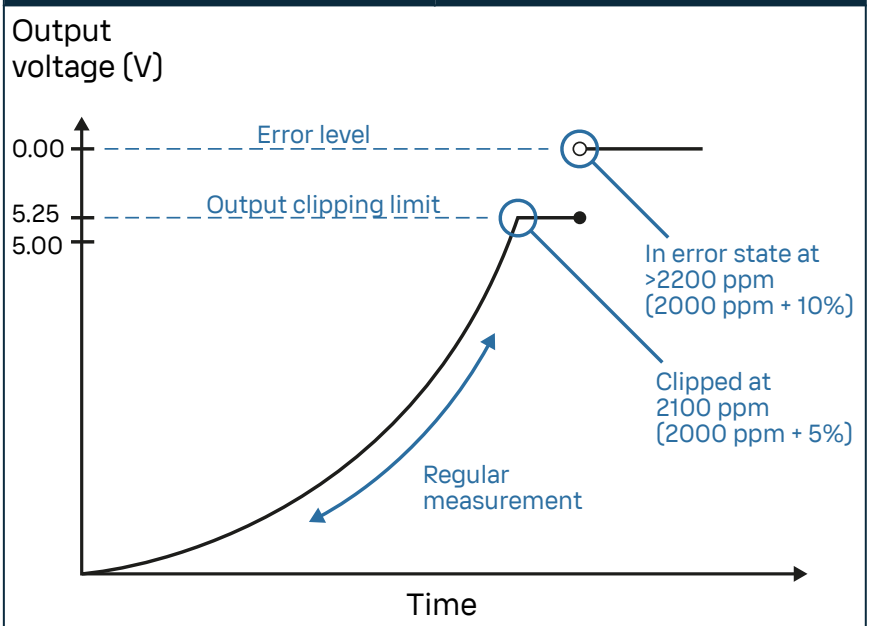

Figure 34 Example of analog output overrange behavior

The example shown above uses output scaled to 0 ... 5 V and 0 ... 2000 ppmCO_2, has error level set to 0 V, clipping set to 5 % overrange, and error limit set to 10 % overrange. CO_2 concentrations (ppm) are indicated for the clipping point and error limit point

Table 33 asel command

Syntax	Description
asel [channel]<cr>	Show the parameter and scaling of the analog output in ppm. **channel** = Analog output channel • 1 = voltage output (V) • 2 = current output (mA)

Syntax	Description
asel [channel] [parameter lowlimit highlimit]<cr>	Set the parameter and scaling of the analog output. **channel** = Analog output channel **parameter** = Parameter that is output on analog channel. The only parameter available is CO_2 (in ppm). **lowlimit** = Lower limit of channel scaling in ppm. Minimum value is -1000000 ppm (= - 100 %). **highlimit** = High limit of channel scaling in ppm. Maximum value is 1000000 ppm (= 100 %).

Example (for channel 1, show the currently set analog output parameter and scaling):

```
pass 1300
asel 1
Aout 1 quantity : CO2(0 ... 10000 ppm)
```

Example (for channel 1, set scaling to 0 ... 4000 ppmCO_2):

```
pass 1300
asel 1 co2 0 4000
Aout 1 quantity : CO2(0 ... 4000 ppm)
```

9.12 Calibration and adjustment commands

CAUTION! Before using the calibration and adjustment commands, read through Calibration and adjustment (page 94). Make sure that the environmental compensation settings of the probe are properly set for your calibration environment; see Environmental compensation (page 20).

Table 34 adate command

Syntax	Description
adate<cr>	Show CO_2 factory adjustment date.

Example:

```
adate
Adjustment date : 20150420
```

Table 35 atext command

Syntax	Description
atext<cr>	Show CO_2 factory adjustment information.

Example:

```
atext
Adjusted at Vaisala/Helsinki
```

Table 36 cdate command

Syntax	Description
cdate<cr>	Show calibration date.
cdate [yyyymmdd]<cr>	Set a new calibration date. **yyyymmdd** = Year (yyyy), month (mm) and day (dd) of calibration

Example:

```
pass 1300
cdate
Calibration date : 20150220
```

Example (set a new calibration date to June 30, 2015):

```
cdate 20150630
Calibration date : 20150630
```

Table 37 ctext command

Syntax	Description
ctext<cr>	Show calibration information text.
ctext [text]<cr>	Set a new calibration information text to be shown after the automatic text "Calibrated at".

Example:

```
pass 1300
ctext
Calibrated at 500 ppm in lab
```

Syntax	Description

Example (set a new information text):
`ctext 0/1000 by NN`
`Calibrated at 0/1000 ppm by NN`	

Table 38 cco2 command

Syntax	Description
cco2<cr>	Show current user adjustment status.
cco2 -lo [co2]<cr> **cco2 -hi [co2]<cr>**	Perform a 1-point (only either low or high concentration) or 2-point (both low and high concentrations) calibration and adjustment. **-lo** = Adjustment at low concentration (under 1000 ppmCO_2) **-hi** = Adjustment at high concentration (over 2000 ppmCO_2) **co2** = CO2 concentration reference in ppm
cco2 -save<cr>	Save the currently entered adjustments. Successfully saving the adjustment clears the calibration date (**cdate** command) and calibration text (**ctext** command) that have been stored in the probe. Use those commands to enter a new calibration date and text.
cco2 -cancel<cr>	Cancel currently entered adjustments.
cco2 -reset<cr>	Clear user adjustments.

Example (show current user adjustment status; no adjustment done):
`pass 1300`
`cco2`
`1.Ref. point low 0`
`1.Meas. point low 0`
`2.Ref. point high 3000`
`2.Meas. point high 3000`
`Gain : 1.0000`
`Offset : 0.0000`	

Syntax	Description

Example (perform a 1-point calibration):
1. Let the probe stabilize in the desired CO_2 concentration (here: 500 ppmCO_2).
2. Enter the calibration commands:
`pass 1300`
`cco2 -lo 500`
`OK`
`cco2 -save`
`OK`
3. Enter a new calibration date and information text:
`cdate 20160325`
`Calibration date : 20160325`
`ctext 500 ppm in lab`
`Calibrated at 500 ppm in lab`	

Example (perform 2-point calibration):
1. Let the probe stabilize in the desired low CO_2 concentration (here: 200 ppmCO_2).
2. Enter the calibration commands:
`pass 1300`
`cco2 -lo 200`
`OK`
`cco2 -save`
`OK`
3. Let the probe stabilize in the desired high CO_2 concentration (here: 3000 ppmCO_2).
4. Enter the calibration commands:
`pass 1300`
`cco2 -hi 3000`
`OK`
`cco2 -save`
`OK`
5. Enter a new calibration date and information text:
`pass 1300`
`cdate 20160425`
`Calibration date : 20160425`
`ctext 200/3000 ppm`
`Calibrated at 200/3000 ppm`	

9.13 Environmental compensation commands

To apply an accurate relative humidity compensation, the temperature and pressure compensation configurations must also match your measurement environment. See the **`rhcmode`**, **`tcmode`** and **`pcmode`** commands for instructions on enabling compensation configuration, and **`env`** command for instructions on setting a compensation value.

For probes with firmware version earlier than 1.4.3, temperature compensation mode **`internal`** is called **`measured`**.

For more information on environmental compensation and the default (neutral) compensation values used for disabled compensations, see Environmental compensation (page 20)

Table 39 env command

Syntax	Description
`env<cr>`	Show current compensation values. Before using this command, you must enable environmental compensation using the following commands: • **`o2cmode [on]`** • **`pcmode [on]`** • **`rhcmode [on]`** • **`tcmode [on | internal]`**

Syntax	Description
`env [temp | pres | oxy | hum] [value]<cr>`	Set new permanent compensation values and store them in **eeprom**. Eeprom: • Non-volatile memory, values retained during power off. • Number of writes is limited to 30000 cycles by memory implementation. • Must only be used for writing permanent values, to avoid wearing out the eeprom. **`temp`** = Compensation temperature. Range −40 ... +60 °C. **`pres`** = Compensation pressure. Range 500 ... 1100 hPa. **`oxy`** = Oxygen content of background gas. Range 0 ... 100 %. **`hum`** = Relative humidity of background gas. Range 0 ... 100 %.
`env [xtemp | xpres | xoxy | xhum] [value]<cr>`	Set new compensation values and store them in **RAM**. RAM: Volatile memory that loses the values when probe is reset, and where values are loaded from non-volatile memory at startup. Must be used for continuously updated values. **`xtemp`** = Compensation temperature stored in RAM. Range −40 ... +60 °C. **`xpres`** = Compensation pressure stored in RAM. Range 500 ... 1100 hPa. **`xoxy`** = Oxygen content of background gas stored in RAM. Range 0 ... 100 %. **`xhum`** = Relative humidity of background gas stored in RAM. Range 0 ... 100 %. Note: If temperature compensation is configured to use an internally measured value (**`tcmode`** is set to **`internal`**), it will continuously update the value in RAM, overriding any temperature value that is written to RAM with the ENV command.

Syntax	Description

Example (Show current compensation values; all compensations are enabled. Note that temperature compensation is in "internal" mode, so the value in use is constantly changing):
`env`
`In eeprom:`
`Temperature (C) : 8.00`
`Pressure (hPa) : 1013.00`
`Oxygen (%O2) : 21.00`
`Humidity (%RH) : 30.00`
 	
`In use:`
`Temperature (C) : 4.90`
`Pressure (hPa) : 1013.00`
`Oxygen (%O2) : 19.70`
`Humidity (%RH) : 27.00`	

Example (set temperature compensation to setpoint mode, and change temperature setpoint value to 5.00 °C in RAM):
`pass 1300`
`tcmode on`
`T COMP MODE : ON`
`env xtemp 5.00`
`In eeprom:`
`Temperature (C) : 8.00`
`Pressure (hPa) : 1013.00`
`Oxygen (%O2) : 21.00`
`Humidity (%RH) : 30.000`
 	
`In use:`
`Temperature (C) : 5.00`
`Pressure (hPa) : 1013.00`
`Oxygen (%O2) : 21.00`
`Humidity (%RH) : 30.00`	

Table 40 o2cmode command

Syntax	Description
`o2cmode<cr>`	Check current oxygen compensation mode. Possible modes: • **`on`** = Compensation enabled using setpoint value. • **`off`** = Compensation disabled, default (neutral) value used: see Environmental compensation (page 20)
`o2cmode [on | off]<cr>`	Change oxygen compensation mode (**`on`** or **`off`**).

Syntax	Description

Example (check oxygen compensation mode; oxygen compensation is disabled, a neutral value is used):
`pass 1300`
`o2cmode`
`O2 COMP MODE : OFF`	

Example (enable oxygen compensation):
`pass 1300`
`o2cmode on`
`O2 COMP MODE : ON`	

Table 41 pcmode command

Syntax	Description
pcmode<cr>	Check current pressure compensation mode. Possible modes: • **on** = Compensation enabled using setpoint value. • **off** = Compensation disabled, default (neutral) value used: see Environmental compensation (page 20).
pcmode [on | off]<cr>	Change pressure compensation mode (**on** or **off**).

Example (check pressure compensation mode; pressure compensation is enabled using a setpoint value):
`pass 1300`
`pcmode`
`P COMP MODE : ON`	

Table 42 rhcmode command

Syntax	Description
rhcmode<cr>	Check current relative humidity compensation mode. Possible modes: • **on** = Compensation enabled using setpoint value. • **off** = Compensation disabled, default (neutral) value used: see Environmental compensation (page 20). To apply an accurate relative humidity compensation, make sure that the temperature compensation and pressure compensation configurations also match the measurement environment.
rhcmode [on | off]<cr>	Change relative humidity compensation mode (**on** or **off**).

Example (check relative humidity compensation mode; relative humidity compensation is disabled, a neutral value is used):

```
pass 1300
rhcmode
RH COMP MODE : OFF
```

Example (enable temperature, pressure and relative humidity compensation using setpoint values):

```
pass 1300
tcmode on
T COMP MODE : ON
pcmode on
P COMP MODE : ON
rhcmode on
RH COMP MODE : ON
```

Table 43 tcmode command

Syntax	Description
tcmode<cr>	Check current temperature compensation mode. Possible modes: • **on** = Compensation enabled using setpoint value. • **off** = Compensation disabled, default (neutral) value used: see Environmental compensation (page 20) • **internal** = Compensation enabled using internal measurement.
tcmode [on | off | internal]<cr>	Change temperature compensation mode (**on**, **off** or **internal**).
Example (check temperature compensation mode; temperature compensation is enabled using a setpoint value): **pass 1300** **tcmode** T COMP MODE : ON	
Example (change temperature compensation to use internal measurement): **pass 1300** **tcmode internal** T COMP MODE : INTERNAL	

9.14 Other commands

Table 44 frestore command

Syntax	Description
frestore<cr>	Restore the probe to its factory configuration. All user settings and user calibration parameters will be lost. After using the **frestore** command, reset the probe using the **reset** command.

Syntax	Description
Example (restore the factory settings and reset the probe):	

```
pass 1300
frestore
Parameters restored to factory defaults
reset
GMP25x 1.0.0
```

Table 45 pass command

Syntax	Description
pass [code]<cr>	Access advanced serial commands. Advanced commands can be used until the next reset. **code** = Code for enabling advanced commands (1300).
Example:	

```
pass 1300
```

Table 46 reset command

Syntax	Description
reset<cr>	Reset the probe. The probe will restart as if it had just been powered on.
Example:	

```
reset
GMP25x 1.0.0
```

10. Calibration and adjustment

Calibrate and adjust the CO_2 measurement of the GMP252 probe as needed. Before starting, read through this section completely so that you are aware of your options, and the main factors that affect the result.

Performing an accurate calibration and adjustment takes some time and preparation. Instead of doing it yourself, you can also have a Vaisala Service Center calibrate and adjust your probe.

Calibration means comparing the measurement output of the device to a known reference, such as a known environment in a calibration chamber or the output of a reference instrument. Correcting the reading of the device so that it measures accurately is referred to as **adjustment**.

10.1 Calibration setup

Using handheld meter as reference

You can perform a 1-point calibration using a handheld meter as a reference. You will need a calibrated reference instrument to compare against, for example an Indigo80 handheld indicator with a calibrated GMP252 probe.

With the probe and the reference instrument in the same space, allow the measurement to stabilize before comparing the readings. Try to provide as stable an environment as you can during this time. Avoid working around the probe and reference instrument during this time.

Using calibration gas as reference

There are two easy ways to use a calibration gas as a reference:

- You can supply the gas to the probe using the calibration adapter accessory (Vaisala item code DRW244827SP). Gas flow should be in the range 0.5 ... 1.1 l/min, recommendation is 1 l/min. Allow the measurement to stabilize for three minutes before starting the calibration.
- You can fill the entire incubator with the calibration gas. You can use calibration gas a reference by putting the probe in a suitable chamber (for example, an incubator) and filling that chamber with the calibration gas.

To perform a two-point adjustment, you need two calibration gases: one gas that is below 1000 ppmCO_2 (low-end reference) and one that is above 2000 ppmCO_2 (high-end reference).

When supplying the gas from a gas bottle, make sure the gas bottle has stabilized to room temperature before starting.

10.2 Effect of environmental compensations

The probe has various environmental compensations that improve its CO_2 measurement accuracy (see Environmental compensation (page 20)). As the calibration and adjustment environment may differ from the actual measurement environment, you must make sure that the compensation settings are properly set. Here are some key points to remember:

- Pressure and temperature compensations have a significant effect on accuracy. If you are using setpoint values instead of the values from the built-in temperature sensor or an integrated system, make sure to correct the setpoints so that they correspond to your calibration situation. Consider switching temperature compensation to use the internal sensor and/or integrated system when calibrating, and then switching back when calibration and adjustment is done.
- The effect of background gas compensations for humidity and oxygen may be significant when using calibration gases, since these gases are often dry and oxygen-free. For example, pure nitrogen gas is typically used as a convenient 0 ppm CO_2 reference. As it does not contain any oxygen or humidity, the compensations for them must be set to zero.
- Remember to restore the normal compensation settings after completing calibration and adjustment. If you are integrating the calibration functionality of the probe as part of a control software, also implement proper handling of the environmental compensations.

10.3 Limits of adjustment

The probe limits the amount of adjustment that is allowed to the CO_2 measurement. The maximum correction that you can apply is 1000 ppm + 25 % of the probe's uncorrected reading. Previous user adjustments do not affect this limit (the correction is not cumulative). This feature limits the possible error introduced by incorrect adjustment.

For example, if you are adjusting using a 5000 ppmCO_2 calibration gas, the maximum correction you can apply is approximately 2250 ppm. Attempting to apply a greater adjustment will fail. Notification of failure from the probe depends on the interface you are using for adjustment.

10.4 Adjustment types

You can adjust the CO_2 measurement of the probe in 1 or 2 points.

- 1-point adjustment is recommended if you are interested in maintaining a fixed CO_2 level. For best result, use a calibration gas with a CO_2 concentration that is close to the intended level.
- 2-point adjustment is recommended if you typically measure a variable CO_2 level.

Available adjustment functions depend on the interface you use to operate the probe. If you want to compare the reading of the probe to a reference instrument and adjust it accordingly, use the Indigo80 handheld indicator and a reference probe. If you want to integrate the functionality into a control system, the Modbus interface and the Vaisala industrial protocol are recommended.

Vaisala Insight PC software

You can carry out 1-point and 2-point adjustments and change the environmental compensation settings with the Insight software.

Vaisala Indigo transmitters and Indigo80 handheld indicator

You can use an Indigo transmitter's configuration interface in the Insight PC software or connect the probe to the Indigo80 handheld indicator to carry out 1-point and 2-point adjustments and change the environmental compensation settings.

MI70 handheld indicator

The MI70 handheld indicator supports 1-point adjustment, either using a calibration gas or using a reference instrument that is connected to the MI70.

Vaisala Industrial Protocol

Vaisala industrial protocol supports 1-point and 2-point adjustment with the **`cco2`** command. Configuration of the environmental compensation settings can be done using serial line commands.

More information

- Calibration and adjustment commands (page 83)
- Overview of calibration with Indigo200 using Insight (page 98)
- Performing manual adjustment with Indigo80 handheld indicator using previously measured values (page 103)
- Calibration and adjustment with MI70 indicator (page 105)
- Configuration registers (page 129)

10.4.1 Adjusting CO_2 using previously measured values

If you have a list of previously collected calibration readings (for example, from a 3rd party laboratory calibration), you can adjust the device without having to generate the calibration conditions and wait for stabilization. This adjustment method is available starting from probe firmware version 1.4.3.

Insight PC software adjustment example:

1. Connect the probe to Insight PC software: for instructions, see Connecting to Insight software (page 37).
2. Before starting the adjustment, make sure that your environmental compensation settings (for example, the relative humidity and oxygen concentration values given as the current operating environment) are correct for your present environment. You can review and change the environmental settings in the **Configure device** menu.
3. To open the Insight PC software calibration menu, select ⚙ to access Insight main menu. In the main menu, select **Calibrate**.
4. Select **CO_2 adjustment**.

5. Select the **Reference value, point 1** field and enter the CO_2 level of calibration point 1. Press **Enter** or click outside the field when done.
6. Replace the automatically inserted measured value for point 1 with your previously measured value.
7. Repeat the procedure for all desired calibration points.
8. Select **Activate adjustment** and verify the result from the message that appears at the top of the screen.

10.5 DRW244827SP calibration adapter

The optional calibration adapter accessory can be used to feed a reference gas to the probe through a gas port when calibrating. Gas flow should be in the range 0.5–1.1 l/min, recommendation is 1 l/min. Allow the measurement to stabilize for 3 minutes before starting the calibration.

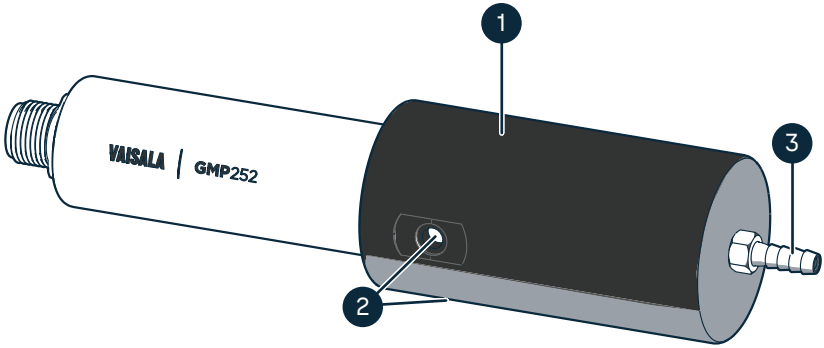

Figure 35 DRW244827SP calibration adapter with probe inserted

1 O-ring inside the adapter
2 Gas outlet on each side of the adapter
3 Gas port (port outer diameter 4.6 mm, port hole inner diameter 2 mm, suitable for tubing with 4 mm inner diameter)

10.6 Overview of calibration with Indigo200 using Insight

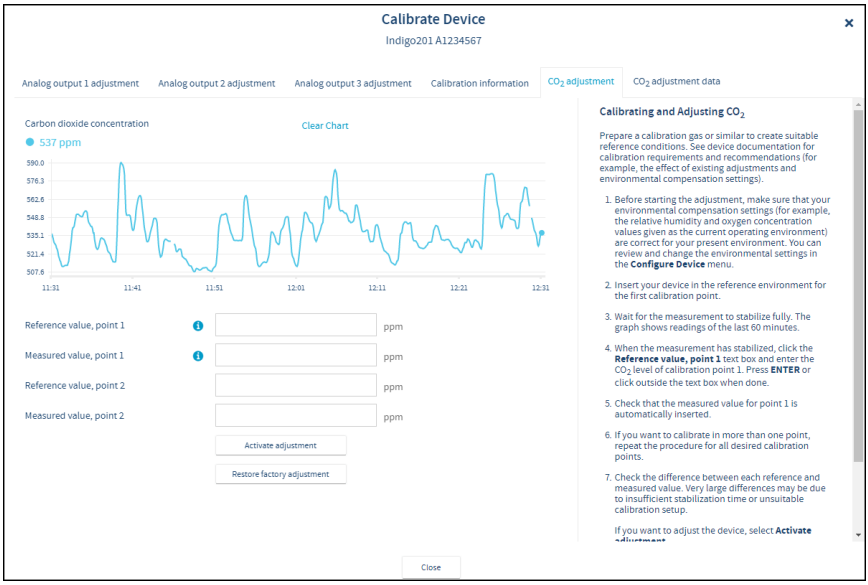

Figure 36 Insight calibration menu main view (CO_2 probe)

The calibration menu in the Insight PC software contains options for calibrating and adjusting the measurement of the probe you have connected to the transmitter, and testing and adjusting the analog output channels of the transmitter. You can also view the current adjustment and restore the probe's factory adjustments.

The range of available options (for example, environmental compensations and the number of adjustment points) varies depending on the features of the connected probe.
The menu examples presented here are examples of calibration options that are available when a CO_2 probe is connected to the transmitter.

CAUTION! Before adjusting a probe's measurement, make sure that you have familiarized yourself with the probe-specific calibration requirements such as possible adjustment limits and environmental compensation interdependencies. See the user documentation of the probe for probe-specific information.

Starting calibration

To open the calibration menu, select ⚙ to access Insight main menu. In the main menu, select **Calibrate**.

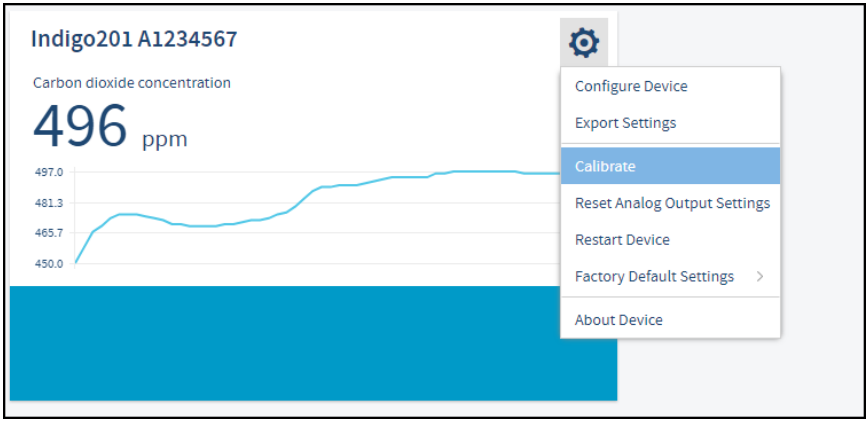

Figure 37 Insight **Calibrate** menu selection

Restoring factory adjustment

Before adjusting the probe measurement, you can remove any possible earlier adjustments with the **Restore factory adjustment** selection, if needed.

Figure 38 Insight **Restore factory adjustment** selection

10.6.1 Environmental compensation

When making adjustments, you can enter information about the environment in which you perform the adjustment. This allows compensating for environmental factors that have an effect on the measurement (for example, temperature, pressure, or background gases).

The selection of environmental compensations available in the Indigo transmitter configuration menus depends on the features and configuration of the connected probe. If the probe you have connected to the transmitter supports environmental compensations, the configuration options are shown in the **Configure device** menu accessible from the Insight PC software main view. For information and instructions on the environmental compensation features of the probe, see the user documentation of the probe you are using.

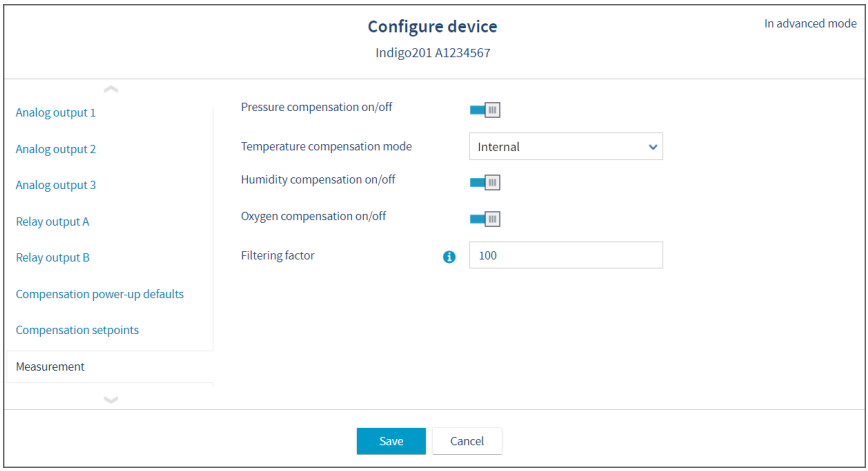

Figure 39 Insight environmental compensation configuration example with CO_2 probe

10.6.2 CO_2 probe adjustment example

Prepare a calibration gas or similar to create suitable reference conditions. See device documentation for calibration requirements and recommendations (for example, the effect of existing adjustments and environmental compensation settings).

To adjust the CO_2 measurement of the probe that is connected to the transmitter:

1. Before starting the adjustment, make sure that your environmental compensation settings (for example, the relative humidity and oxygen concentration values given as the current operating environment) are correct for your present environment. You can review and change the environmental settings in the **Configure device** menu.
2. To open the Insight PC software calibration menu, select ⚙ to access Insight main menu. In the main menu, select **Calibrate**.
3. Select **CO_2 adjustment**.
4. Insert the probe in the reference environment for the first calibration point.
5. Wait for the measurement to stabilize fully. The graph shows readings of the last 60 minutes.

6. When the measurement has stabilized, click the **Reference value, point 1** text box and enter the CO_2 level of calibration point 1. Press **Enter** or click outside the text box when done.
7. Check that the measured value for point 1 is automatically inserted.
8. If you want to calibrate in more than one point, repeat the procedure for all desired calibration points.
9. Check the difference between each reference and measured value. Very large differences may be due to insufficient stabilization time or unsuitable calibration setup.

   If you want to adjust the device, select **Activate adjustment**.
   To exit without taking the adjustment in use, select **Close**.
10. After calibrating your device, update the information in the **Calibration information** tab.

10.7 Calibration and adjustment with Indigo80 handheld indicator

The Indigo80 handheld indicator provides two ways to calibrate and adjust measurements for probes: **Guided calibration** and **Manual adjustment**.

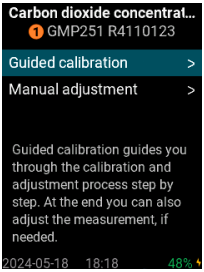

Figure 40 Calibration methods available with Indigo80

- Choose **Guided calibration** when you have a reference environment or a calibrated reference instrument and want the indicator to guide you through the calibration process step by step. At the end you can also adjust the measurement, if needed.
- Choose **Manual adjustment** if you already have previously collected calibration readings (for example, from a calibration certificate) for 1 or 2 calibration points and want to adjust the probe to correct the observed errors. No separate reference instrument or reference environment is needed during the manual adjustment procedure. For all other use cases, **Guided calibration** is recommended.

10.7.1 Performing guided calibration with Indigo80 handheld indicator

- Probe connection cable (M12-M12, Vaisala item code 272075SP)
- Calibration reference (for example, a reference gas with a known concentration, or a recently calibrated Indigo80-compatible probe

In guided calibration, the indicator guides you through the calibration process step by step. At the end, you can also adjust the measurement, if needed.

You can choose to perform either 1-point or 2-point calibration, and choose to use the reference gas or instrument of your choice, for example, another probe connected to your indicator.

Before starting the adjustment:

- Familiarize yourself with information on adjustment points and requirements for your probe.
- Make sure that the probe's environmental compensation settings (for example, the pressure value given as the current operating pressure) are correct for your present environment.
- **Always restore factory adjustment before entering a new adjustment.** This prevents any possible earlier adjustments having an effect on the new adjustment you make.

1. Connect the probe(s) to the indicator.
2. Open the indicator main menu by pressing ☰.
3. Select **Devices**. If you have more than one device connected to the indicator, make a further selection between the devices.
4. Select **Calibrate / Adjust**.
5. Acknowledge the notification by pressing **OK**.
6. Select **CO_2 adjustment**.
7. Select **Guided calibration**.
8. In **Calibration points**, select the number of calibration points: **1 point** or **2 points**.
9. If you are using a reference instrument connected to Indigo80, the name of the connected device is displayed under **Reference**.

   Alternatively, to use any reference environment(s) of your choice (for example, a reference gas or gases), select **Reference > Other reference**.
10. Select **Start calibration**.

The indicator guides you through the calibration process from this point onwards. Press ⊳ to proceed from one view to another.

10.7.2 Performing manual adjustment with Indigo80 handheld indicator using previously measured values

- Probe connection cable (M12-M12, Vaisala item code 272075SP)
- Previously collected calibration readings, for example, a calibration certificate

This procedure tells you how to use the Indigo80 handheld indicator to adjust the probe's measurement in 1–2 points when you have a list of previously collected calibration readings available (for example, in a calibration certificate from a third party laboratory calibration). You can adjust the probe without having to generate the calibration conditions and wait for stabilization.

If you adjust the probe using previously measured values, the device readings will be corrected and **your previous calibration certificate will not be valid anymore**. If an up-to-date calibration certificate is still needed, you must perform the calibration again to detect any remaining measurement error after the adjustment.

1. Connect the probe(s) to the indicator.
2. Open the indicator main menu by pressing ☰.
3. Select **Devices**. If you have more than one device connected to the indicator, make a further selection between the devices.
4. Select **Calibrate / Adjust**.
5. Acknowledge the notification by pressing **OK**.
6. Select **CO_2 adjustment**.
7. If you have **two probes** connected to the indicator:
   a. Select **Manual adjustment**.
   b. Scroll down and acknowledge the notification by pressing **OK**.
   c. The options **Read from device** and **Enter manually** will be visible at this point. Select **Enter manually**.

      Should you need to read the reference value from another device connected to Indigo80, Vaisala recommends accessing this functionality from the **Guided calibration** menu of Indigo80. See Performing guided calibration with Indigo80 handheld indicator (page 102).
8. If you have **one probe** connected to the indicator:
   a. Select **Manual adjustment**.
   b. Scroll down and acknowledge the notification by pressing **OK**.
9. Select **Reference value, point 1**.
10. Select **ppm** or **%** as the unit.

11. Use the arrow buttons to set the reference value (for example, the reference gas value from your calibration certificate), and then select **OK** or **Set**.
12. Scroll down and select the **Measured value, point 1** field. Select the unit and replace the automatically inserted value with your previously measured calibration reading (for example, the observed CO_2 value from your calibration certificate).
13. Scroll down and repeat for **Reference value, point 2** and **Measured value, point 2** (if performing a 2-point adjustment).
14. To store the adjustments to the probe, scroll down and select **Activate adjustment > OK**. Confirm by selecting **OK**.

    To exit without taking the adjustment in use, press ☰ to end calibration.
15. In the **Calibrate / Adjust** menu of your probe, select **Calibration information** and update any relevant data.
16. Press ☰ to end calibration.

More information

- Connecting probes to Indigo80 (page 51)
- Configuring environment settings with Indigo80 handheld indicator (page 55)
- Effect of environmental compensations (page 95)

10.7.3 Restoring factory adjustment with Indigo80 handheld indicator

- Probe connection cable (M12-M12, Vaisala item code 272075SP)

If needed, you can restore the factory adjustment for your probe's output parameters using the Indigo80 handheld indicator.

Always restore factory adjustment before entering a new adjustment. This prevents any possible earlier adjustments having an effect on the new adjustment you make.

1. Connect the probe(s) to the indicator.
2. Open the indicator main menu by pressing ☰.
3. Select **Devices**. If you have more than one device connected to the indicator, make a further selection between the devices.
4. Select **Calibrate / Adjust**.
5. Acknowledge the notification by pressing **OK**.

6. Select the type of adjustment to restore.

   For example, select **CO_2 adjustment**.
7. If you have **two probes** connected to the indicator:
   a. Select **Manual adjustment**.
   b. Scroll down and acknowledge the notification by pressing **OK**.
   c. The options **Read from device** and **Enter manually** will be visible at this point. Select **Enter manually**.
8. If you have **one probe** connected to the indicator:
   a. Select **Manual adjustment**.
   b. Scroll down and acknowledge the notification by pressing **OK**.
9. Scroll down and select **Restore factory adjustment > OK**.
10. Confirm by selecting **OK**.
11. Press ⊜ to end calibration.

More information

- Connecting probes to Indigo80 (page 51)

10.8 Calibration and adjustment with MI70 indicator

Before using the MI70 indicator for calibration and adjustment, read the instructions in Calibration and adjustment (page 94). Make sure that the environmental compensation settings of the probe are properly set for your calibration environment; see Changing environmental compensation settings with MI70 indicator (page 60).

When two probes are connected to the MI70 indicator, MI70 uses Roman numerals “I” and “II” to indicate which port the parameter or function in question is connected to.

10.8.1 1-point adjustment with an MI70-compatible reference probe

1. Connect the GMP252 probe to Port I of the MI70 indicator.
2. Connect the calibrated reference probe to Port II. Make sure the reference probe is in the same environment as GMP252’s sensor.

3. If you are using the calibration adapter to feed a calibration gas to GMP252, you must feed the same gas to the reference probe as well. Refer to the documentation of your reference probe on how to do this and what accessories you need.
4. Turn on the MI70 indicator.
5. Start the adjustment sequence from **Main menu > Functions > Adjustments**.

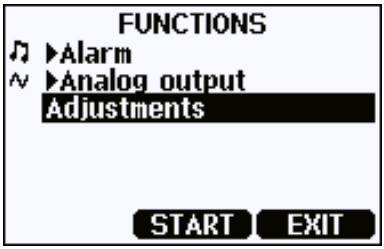

6. MI70 notifies you that automatic power off is disabled during adjustment mode, press **OK** to acknowledge.
7. To proceed with the adjustment, select the **CO2(I)** parameter in the **Select Quantity** screen.

   In the **Select Quantity** screen you can also view the currently used compensation values, and the **Last adjustment date** information. You can update the date and text using the **CDATE** and **CTEXT** commands on the serial line.
8. You may be prompted to check the environmental settings of the reference probe before proceeding. Press **Yes** to check the settings and **Exit** when you have checked and corrected the settings.
9. The adjustment mode is now active, and you can see the measured CO_2 readings and their difference on the screen. Allow the measurement to stabilize. To proceed with the adjustment, press **Adjust**.

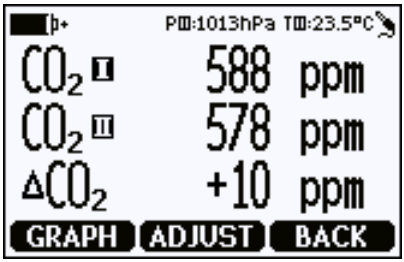

10. Select **To same as CO2(II)**.

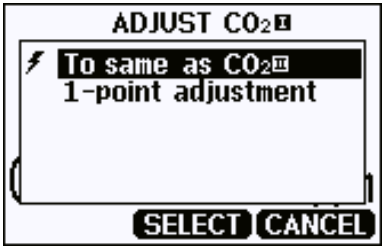

11. You will be prompted to confirm you want to adjust: select **Yes**.
12. If the adjustment is successful, MI70 will show the text **Adjustment Done**, after which you will return to the adjustment mode. At this point you can press **Back** and **Exit** to leave the adjustment mode. The adjustment is now completed.

    If the adjustment cannot be applied, MI70 will show the text **Cannot adjust**, possibly followed by a text stating the reason. A possible reason for an adjustment failure is attempting to apply a very large correction to the reading.

10.8.2 1-point adjustment with a reference gas

1. Connect GMP252 to Port I of the MI70 indicator.
2. Feed a calibration gas to the GMP252 using the calibration adapter accessory (Vaisala item code: DRW244827SP). If you are using ambient air as the calibration gas, you must have a reference meter in the same environment to verify the CO_2 concentration.
3. Turn on the MI70 indicator.
4. Start the adjustment sequence from **Main menu > Functions > Adjustments**.

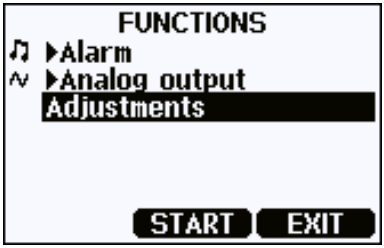

5. MI70 notifies you that automatic power off is disabled during adjustment mode, press **OK** to acknowledge.
6. Select the CO_2 parameter when prompted.

7. You may be prompted to check the environmental settings of the reference probe before proceeding. Press **Yes** to check the settings and **Exit** when you have checked and corrected the settings.
8. The adjustment mode is now active, and you can see the measured CO_2 reading on the screen. To proceed with the adjustment, press **Adjust**.

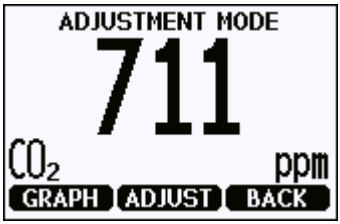

9. Select **1-point adjustment**.

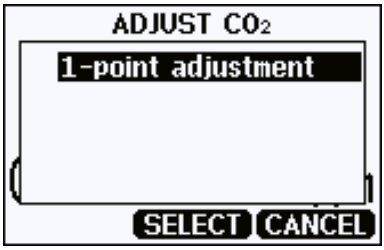

10. You will be prompted if you really want to adjust. Select **Yes**.
11. You are now in the 1-point adjustment screen. Allow the measurement to stabilize and press **Ready**.
12. Enter the CO_2 concentration of the reference gas and press **OK**.

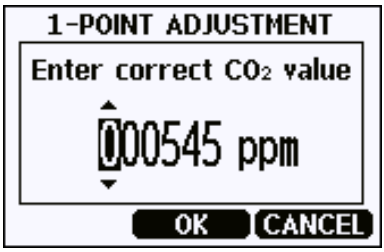

13. You will be prompted if you really want to adjust. Select **Yes**.

14. If the adjustment is successful, MI70 will show the text **Adjustment Done**, after which you will return to the adjustment mode. At this point you can press **Back** and **Exit** to leave the adjustment mode. The adjustment is now completed.

    If the adjustment cannot be applied, MI70 will show the text **Cannot adjust**, possibly followed by a text stating the reason. A possible reason for an adjustment failure is attempting to apply a very large correction to the reading.

11. Environmental compensation

When necessary, various environmental compensations can be applied to improve the CO_2 measurement accuracy of the probe.

The probe can compensate for the effects of the following parameters:

- Temperature
- Pressure
- Background gas oxygen (O_2) content
- Background gas relative humidity (%RH)

To apply an accurate relative humidity compensation, make sure that also the temperature compensation and pressure compensation configurations match the measurement environment.

The probe has an on-board temperature sensor that can be used to compensate for temperature. Additionally, if the probe is integrated in a system that measures one or more of the compensation parameters (T, P, RH, O_2), they can be updated to the probe continuously.

Compensation parameters are configured on the order form when ordering the probe, and can later be updated using Vaisala Industrial Protocol or Modbus protocol.

You can also turn off any of the compensations. In that case, the probe uses the default compensation value that is mathematically neutral for the probe's internal compensation model.

You can configure the environmental compensation settings with any of the following options:

- Vaisala Industrial Protocol serial commands
- Vaisala Insight software
- Modbus configuration registers
- MI70 handheld indicator
- Indigo80 handheld indicator

The environmental compensation configuration options available in the MI70 handheld indicator are not compatible with the probe. Using MI70 to configure the environmental compensation settings of the probe can decrease measurement accuracy.

11.1 Environmental compensation configuration overview (Insight PC software)

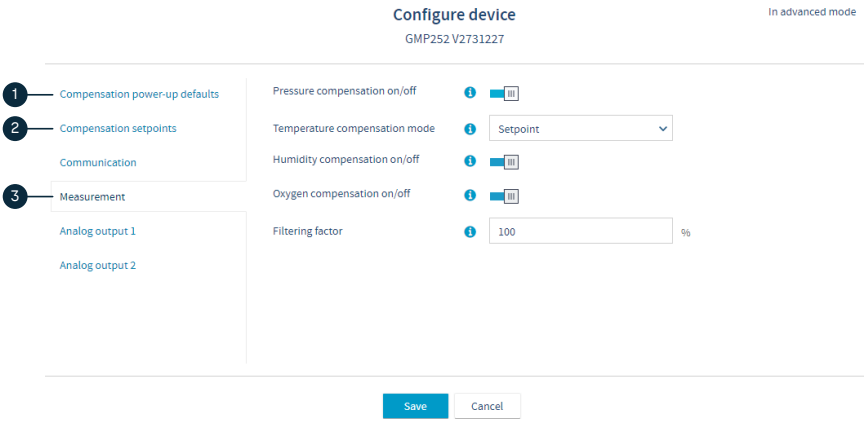

Figure 41 Measurement menu view in Insight PC software

1 **Compensation power-up defaults**: setpoint compensation values that are taken into use when the probe resets.
2 **Compensation setpoints**: temporary setpoint compensation values that are in use until the probe is reset, or until the compensation is switched off.
3 **Measurement**: options for switching compensations on and off and selecting the temperature compensation mode (**Off**/**Setpoint**/**Internal**)

You can set environmental compensation values for the following parameters:

- Temperature
- Pressure
- Background gas oxygen (O_2) content
- Background gas relative humidity (%RH)

Each of these environmental parameters can be entered as a setpoint value. For temperature compensation, you can also select to use the probe's internal temperature measurement that updates constantly.

You can set a power-up default setpoint value for each compensation parameter, and a temporary compensation setpoint value that resets to the power-up defaulf value when the probe is restarted. Compensations can also be switched off in the **Measurement** view.

Note that when you enter a setpoint value for a compensation parameter and save the configuration, the compensation value is automatically taken into use and the **On**/**Off** status of the compensation parameter is automatically switched to **On**, also if it was set to **Off** previously.

12. Maintenance

12.1 Cleaning

You can clean the probe body by wiping it with a moist cloth. Standard cleaning agents can be used.

When cleaning, follow these precautions:

- Do not immerse the probe in liquid to clean it.
- Be careful not to block the filter when cleaning the probe. The optional sintered PTFE filter is especially sensitive to blockage.
- When changing the filter, you can use clean instrument air to gently blow any loose dirt and filter material from the sensor. Do not attempt to clean the optical surfaces in any other manner.

12.1.1 Chemical tolerance

The following chemicals can be used to clean the probe:

- H_2O_2 (2000 ppm), non-condensing
- Alcohol-based cleaning agents such as ethanol and IPA (70 % isopropyl alcohol, 30 % water)
- Acetone
- Acetic acid

Avoid exposing the probe to chemicals for unnecessarily long periods of time. Do not immerse the probe in a chemical or spray anything directly on the probe. Wipe chemicals off the probe after cleaning.

12.2 Changing the filter

Change the filter to a new one if it shows visible signs of contamination or dirt. When changing the filter, use clean gloves to avoid blocking the pores of the new filter.

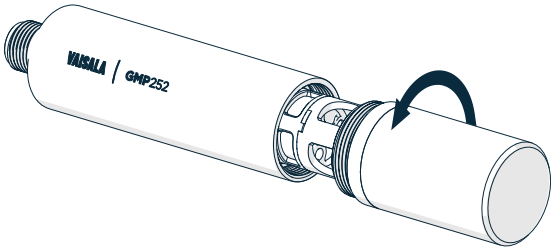

Figure 42 Opening the filter

CAUTION! When changing the filter, you can use clean instrument air to gently blow any loose dirt and filter material from the sensor. Do not attempt to clean the optical surfaces in any other manner.

13. Troubleshooting

13.1 Problem situations

Problem	Possible cause	Remedy
Analog output reading is unchanging and appears incorrect.	Analog output is in error state.	Remove the cause of the error state and the analog output will recover its normal function.
Probe outputs stars "****" on serial line instead of measurement data.	Incorrect supply voltage.	Check the power supply. Check the active errors using the ERRS command on the serial line.
	Unsuitable operating environment.	Verify that the operating environment is within specified operating limits.
Unable to access probe on the RS-485 line.	Incorrect wiring.	Check that the RS-485 connection is wired correctly.
	Probe in POLL mode with unknown address.	Power cycle or reset the probe and try again.
CO_2 measurement not working.	Condensation on the sensor.	Remove the filter and check if condensation has formed on the sensor. If yes, dry out the condensation with instrument air and insert a new dry filter. Keep the probe powered and operating to prevent re-occurrence.

More information

- Wiring (page 34)
- Analog output error state (page 117)

13.2 Error messages

The error messages are categorized according to the severity of the status:

- **Critical errors** are fatal to the operation of the unit. It may not be able to respond to communication at all, and will not measure correctly.
- **Errors** prevent CO_2 measurement and cause the analog outputs to be set to the error state. Depending on the problem, errors may resolve themselves. For example, sensor heating will eventually dry out condensation on the optical surfaces.
- **Warnings** do not prevent normal operation but may indicate possible problems.

- **Status** indicates a known state of the unit.

In case of constant error, contact Vaisala.

If using the probe in Modbus mode, see the possible error messages in Table 59 (page 132).

Error message and code	Description	Recommended action
Critical errors		
Program memory crc critical error [1]	Program memory is corrupted.	Fatal error, contact Vaisala technical support.
Parameter memory crc critical error [2]	Parameter memory is corrupted.	Fatal error, contact Vaisala technical support.
Errors		
Low supply voltage error [5]		Check and correct the supply voltage.
Internal 30V error [6]	Low internal 30 V voltage.	
Low RX signal error [7]	Low input signal. Can be caused by dirt or condensation on the optical surfaces.	Wait to see if condensation is removed by heat.
Internal 8V error [8]	Low internal 8 V voltage.	
RX signal cut error [9]	Signal distortion (EMC interference)	
Out of measurement range error [13]	CO_2 concentration is too high to measure.	Wait for CO_2 concentration to fall into the measurable range.
Sensor heater error [14]	Sensor heater resistance is out of range.	
IR temperature error [15]	Infrared source temperature error.	
FPI slope error [16]	Signal receiver error.	Contact Vaisala technical support.
Internal 2.5V error [17]	Internal 2.5 V voltage out of range.	
Internal 1.7V error [18]	Internal 1.7 V voltage out of range.	
Low IR current error [19]	Infrared source failure.	Contact Vaisala technical support.
Warnings		
Signal too low warning [21]	Low input signal. Can be caused by dirt or condensation on the optical surfaces.	Continue normally.

Error message and code	Description	Recommended action
Cut warning [23]	EMC interference error limit approaching.	Check for EMC interference sources.
Unexpected restart detected [24]	Transmitter is reset by watchdog process.	Continue normally.
Status messages		
CO_2 adjustment mode active [27]		Complete the CO_2 adjustment.
Calibration about to expire [29]	This message is displayed by the calibration reminder functionality.	Calibrate the probe and update the calibration date information.
Calibration expired [30]	This warning is displayed by the calibration reminder functionality if the calibration interval has been exceeded.	

More information

- Technical support (page 137)

13.3 Analog output error state

The probe sets the analog output channel into a defined error level instead of the measured result in two situations:

- Probe detects a measurement malfunction. This means an actual measurement problem, such as sensor damage or unsuitable environmental conditions.
- Measured value(s) are significantly outside the scaled output range.

The default error level depends on the output type:

Output	Default error level
0–20 mA	23 mA
4–20 mA	2 mA
0–5 V	0 V
0–10 V	0 V

The probe resumes normal operation of the analog output when the cause of the error state is removed.

14. Technical data

14.1 GMP252 specifications

Table 47 GMP252 measurement performance

Property	Description/value
Measurement range	0–10 000 ppm CO_2 (up to 30 000 ppm CO_2 with reduced accuracy)
Accuracy [1)]	
0–3000 ppm CO_2	±40 ppm CO_2
3000–10 000 ppm CO_2	±2 % of reading
Up to 30 000 ppm CO_2	±3.5 % of reading
Calibration uncertainty	
at 2000 ppm CO_2	±31 ppm CO_2
at 10 000 ppm CO_2	±105 ppm CO_2
Long-term stability	
0–3000 ppm CO_2	±60 ppm CO_2/year
3000–6000 ppm CO_2	±150 ppm CO_2/year
6000–10 000 ppm CO_2	±300 ppm CO_2/year
Temperature dependence 0–10 000 ppm CO_2	
With compensation, −10 ... +50 °C	±0.05 % of reading/°C
With compensation, −40 ... +60 °C	< ±0.1 % of reading/°C
Without temperature compensation at 2000 ppm CO_2 (typical)	−0.5 % of reading/°C
Pressure dependence	
With compensation at 0–10 000 ppm CO_2, 500–1100 hPa	±0.015 % of reading/hPa
Without compensation (typical)	+0.15 % of reading/hPa
Humidity dependence	
With compensation, 0–10 000 ppm CO_2, 0–100 %RH	±0.7 % of reading (at +25 °C (+77 °F))
Without compensation (typical)	+0.05 % of reading/%RH

Property	Description/value
O_2 dependence	
With compensation, 0–10 000 ppm %CO_2, 0–90 %O_2	±0.6 % of reading (at +25 °C (+77 °F))
Without compensation (typical)	−0.08 % of reading/%O_2
Start-up, warm-up, and response time	
Start-up time at +25 °C	< 12 s
Warm-up time for full spec.	< 2 min
Response time (T90):	
With standard filter	< 1 min
Flow-through option with > 0.1 l/min	30 s
With spray shield	< 3 min
Flow rate dependence (for flow-through option)	
< 1 l/min flow	No effect
1–10 l/min flow	< 0.6 % of reading l/min

1) *At 25 °C (77 °F) and 1013 hPa (incl. repeatability and non-linearity).*

Table 48 GMP252 operating environment

Property	Description/value
Operating temperature of CO_2 measurement	−40 ... +60 °C (−40 ... +140 °F)
Storage temperature	−40 ... +70 °C (−40 ... +158 °F)
Operating humidity	0–100 %RH, non-condensing
Condensation prevention	Sensor head heating when power on
IP rating, probe body	IP65: Dust-tight. Protected from water jets from any direction.
Chemical tolerance (temporary exposure during cleaning)	• H_2O_2 (2000 ppm, non-condensing) • Alcohol-based cleaning agents (for example ethanol and IPA) • Acetone • Acetic acid
Pressure	
Compensated	500–1100 hPa
Operating	< 1.5 bar
Gas flow (for flow-through option)	

Property	Description/value
Operating range	< 10 l/min
Recommended range	0.1–0.8 l/min

Table 49 GMP252 inputs and outputs

Property	Description/value
Analog outputs	• 0–5/10 V (scalable), min. load 10 kΩ • 0/4–20 mA (scalable), max. load 500 Ω
Digital output	Over RS-485: • Modbus • Vaisala Industrial Protocol
Operating voltage	
With digital output in use	12–30 V DC
With voltage output in use	12–30 V DC
With current output in use	20–30 V DC
Power consumption	
Typical (continuous operation)	0.4 W
Maximum	0.5 W

Table 50 GMP252 mechanical specifications

Property	Description/value
Weight, probe	55 g (1.94 oz)
Connector type	M12 5-pin male
Materials	
Probe housing	PBT polymer
Filter	PTFE
Dimensions	
Probe diameter	25 mm (0.98 in)
Probe length	130 mm (5.12 in)

Table 51 GMP252 compliance

Property	Description/Value
EU directives and regulations	EMC Directive (2014/30/EU) RoHS Directive (2011/65/EU) as amended by 2015/863
Electromagnetic compatibility (EMC)	EN 61326-1, basic electromagnetic environment
EMC emissions	CISPR 32 / EN 55032, Class B
Compliance marks	CE, RCM

14.2 Spare parts and accessories

Information on spare parts, accessories, and calibration products is available online at vaisala.com and store.vaisala.com.

Table 52 GMP252 spare parts and accessories

Item	Item code
Porous sintered PTFE filter for GMP252	DRW244221SP
Probe connection cable with open wires (1.5 m), shielded	223263SP
Probe connection cable with open wires (1.5 m), shielded	254294SP
Probe connection cable with open wires (3 m), shielded	26719SP
Probe connection cable with open wires (10 m), shielded	216546SP
Probe connection cable with open wires and 90° plug (0.6 m), shielded	244669SP
Probe connection cable with open wires and 90° plug (1.5 m), shielded	255102
MI70 connection cable, M12 5-pin	CBL210472
Connection cable for Indigo80, M12-5F - M12-5M, 1.5 m	272075SP
Flat cable for GMP250 probes, M12 5-pin	CBL210493SP
Indigo USB adapter [1)]	USB2
Probe mounting clips (2 pcs)	243257SP
Probe mounting flange	243261SP
Probe holder assembly	ASM213582
Probe handle with magnetic hanger	GMP252HANDLESP

Item	Item code
Probe handle	ASM214342SP
Flow-through adapter with gas ports	ASM212011SP
Calibration adapter	DRW244827SP
Spray shield	ASM212017SP
Radiation shield DTR250	DTR250
Radiation shield DTR250 with pole mounting kit	DTR250A

1) *Vaisala Insight software for Windows is available at www.vaisala.com/insight.*

14.3 Dimensions

14.3.1 GMP252 probe dimensions

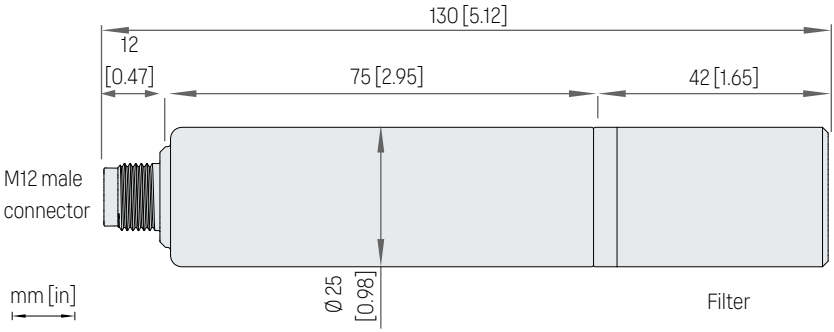

Figure 43 GMP252 dimensions

14.3.2 243261SP mounting flange dimensions

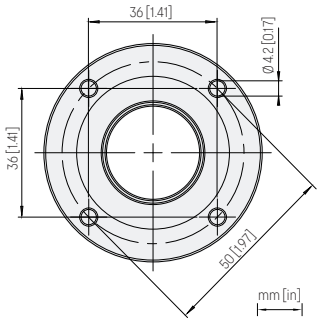

Figure 44 243261SP mounting flange dimensions

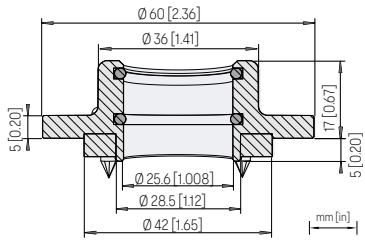

Figure 45 243261SP mounting flange dimensions, cross section

14.3.3 DRW244827SP calibration adapter dimensions

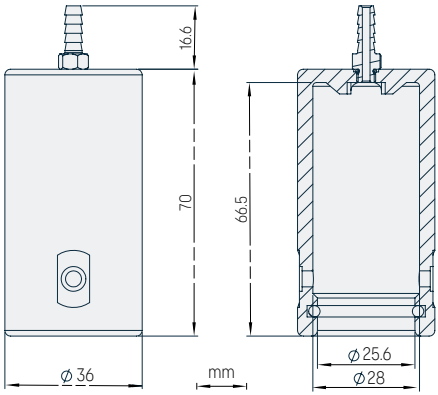

Figure 46 DRW244827SP calibration adapter dimensions

14.3.4 ASM212017SP spray shield dimensions

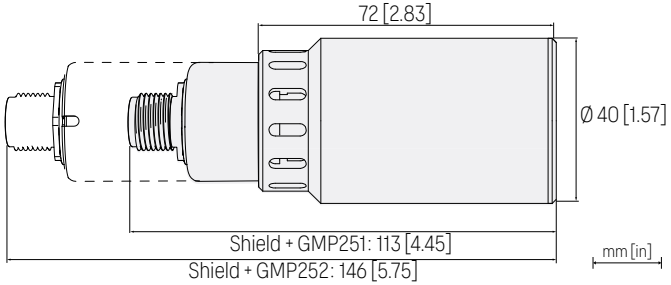

Figure 47 ASM212017SP spray shield dimensions

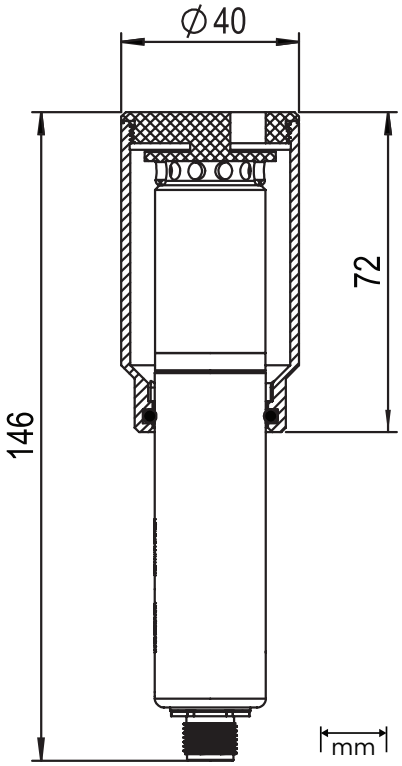

Figure 48 GMP252 spray shield cross section

14.3.5 DTR250 radiation shield dimensions

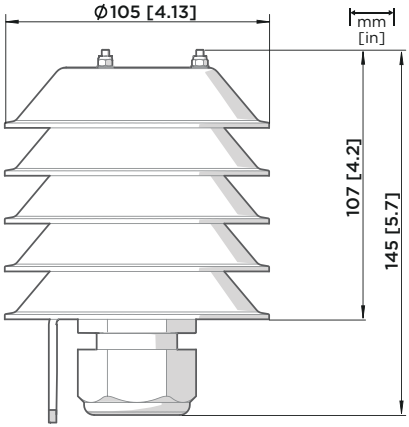

Figure 49 DTR250 radiation shield dimensions (mm)

14.3.6 DTR250A pole mounting kit dimensions

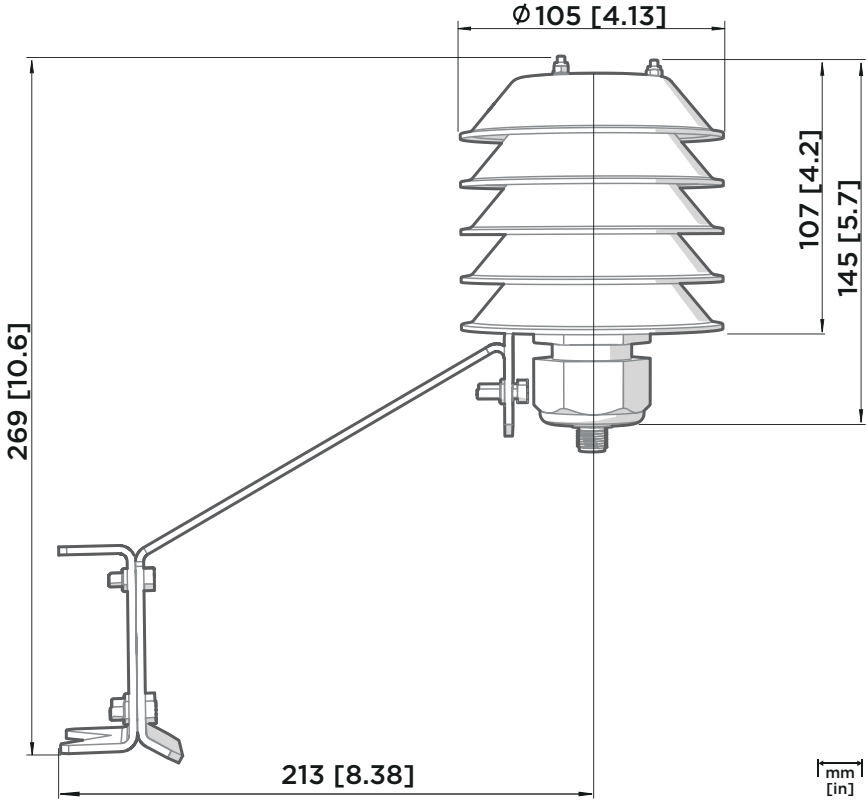

Figure 50 DTR250A pole mounting kit dimensions (in mm [inch])

Appendix A. Modbus reference

A.1 Default communication settings

Table 53 Default Modbus serial communication settings

Property	Description/Value
Serial bit rate	19200
Parity	N
Number of data bits	8
Number of stop bits	2
Modbus device address	240

A.2 Function codes

Table 54 Modbus function codes

Function code (decimal)	Function code (hexadecimal)	Name
03	0x03	Read Holding Registers
16	0x10	Write Multiple Registers
43/14	0x2B / 0x0E	Read Device Identification

A.3 Data encoding

In the data registers, the numeric values are available in one or two formats with separate register addresses: 32-bit IEEE floating point format and/or 16-bit signed integer format.

A.3.1 32-bit floating point or 32-bit integer format

Registers using **32-bit float** data format are encoded using the **binary32** encoding defined in IEEE 754. The format is also known as "single-precision floating point format".

The least significant 16 bits of a floating point number are placed at the Modbus register listed in the table, while the most significant 16 bits are placed in the register with number/address + 1, as specified in Open Modbus TCP Specification, Release 1.0. This is also known as "little-endian" or "Modicon" word order.

Despite the specification, some Modbus masters may expect a "big-endian" word order (most significant word first). In such case, you must select "word-swapped" floating point format in your Modbus master for the Modbus registers of the device.

A complete 32-bit floating point or 32-bit integer value should be read and written in a single Modbus transaction.

CAUTION! Reading the measurement data registers with incorrect floating point format setting may occasionally result in correct-looking, but nevertheless incorrect values.

It is highly recommended to verify that you have configured the floating point format correctly on your Modbus host system by reading a floating point value from a test value register.

A.3.2 16-bit integer format

Some 16-bit integer values in the data registers are scaled to include the necessary decimals. The scaling factors for those values are shown in the register tables.

Table 55 Interpretation of 16-bit signed integer values

Value (decimal)	Value (hexadecimal)	Description
0–32766	0x0000–0x7FFE	Value in range 0–32766
32767	0x7FFF	Value is 32767 or larger
32768	0x8000	Value is not available
32769	0x8001	Value is −32767 or smaller
32770–65535	0x8002–0xFFFF	Value in range −32766 ... −1 (2's complement)

A.4 Modbus registers

Registers are numbered in decimal, starting from 1. Register addresses in actual Modbus messages (Modbus Protocol Data Unit (PDU)) are in hexadecimal and start from zero. Register number 1 corresponds to address 0x0 in the actual Modbus message.

CAUTION! Reading the wrong register(s) may result in correct-looking values. Check the reference documentation of your Modbus host (PLC) to verify which notation it uses for Modbus register addresses.

A.4.1 Measurement data registers

Table 56 Modbus measurement data registers (read-only)

Register number	Address	Description	Data format	Unit
1	0x0000	Measured CO_2 value	32-bit float	ppm
3	0x0002	Compensation T	32-bit float	°C
5	0x0004	Measured T	32-bit float	°C
257	0x0100	Measured CO_2 value	16-bit signed integer	ppm (up to 32 000 ppm)
258	0x0101	Measured CO_2 value	16-bit signed integer	ppm[1)] (scaled, up to approx. 320 000 ppm)

1) *The ppm output of the second Measured CO_2 value register (number 258) is scaled and must be multiplied by 10.*

A.4.2 Configuration registers

CAUTION! Default power-up values (registers 513–519) are written into non-volatile EEPROM memory. The EEPROM memory implementation has a limit of 30000 writes, and is intended to be used only when saving long-term or permanent configurations. Use the volatile memory (registers 521–527, values cleared on power-up) for non-permanent configurations (for example, if the probe is used in a system that regularly updates the compensation values).

Table 57 Modbus configuration data registers (writable)

Register number	Address	Description	Data format	Unit / Valid range
513	0x0200	Power-up value for pressure compensation	32-bit float	hPa 500–1100 hPa Operating <1.5 bar (Init/default: 1013.25)
515	0x0202	Power-up value for temperature compensation	32-bit float	°C −40 ... +60 °C (Init/default: 25)
517	0x0204	Power-up value for humidity compensation	32-bit float	%RH 0–100 %RH (Init/default: 0)

Register number	Address	Description	Data format	Unit / Valid range
519	0x0206	Power-up value for oxygen compensation	32-bit float	%O_2 0–100 %O_2 (Init/default: 0)
521	0x0208	Volatile (value cleared at probe reset) pressure compensation	32-bit float	500–1100 hPa (Init copied from power-up value)
523	0x020A	Volatile (value cleared at probe reset) temperature compensation	32-bit float	−40 ... +60 °C (Init copied from power-up value)
525	0x020C	Volatile (value cleared at probe reset) humidity compensation	32-bit float	0–100 %RH (Init copied from power-up value)
527	0x020E	Volatile (value cleared at probe reset) oxygen compensation	32-bit float	0–100 %O_2 (Init copied from power-up value)
769	0x0300	Modbus address	16-bit integer	1–247 (default: 240)
770	0x0301	Serial speed	enum	4800–115200 0 = 4800 1 = 9600 2 = 19200 3 = 38400 4 = 57600 5 = 115200 (default: 2 (19200))
771	0x0302	Serial parity	enum	0 = None 1 = Even 2 = Odd (default: 0 (None))
772	0x0303	Serial stop bits	16-bit integer	1–2 (default: 2)
773	0x0304	Pressure compensation mode	enum	0 = Off 1 = On (default: 1 (On))

Register number	Address	Description	Data format	Unit / Valid range
774	0x0305	Temperature compensation mode	enum	0 = Off 1 = Given 2 = Internal [1)] (default: 2 (Internal))
775	0x0306	Humidity compensation mode	enum	0 = Off 1 = On (default: 0 (Off))
776	0x0307	Oxygen compensation mode	enum	0 = Off 1 = On (default: 0 (Off))
777	0x0308	CO_2 filtering factor	16-bit integer	0–100 (default: 100 (no filtering)). For information on setting the filtering factor, see Filtering factor (page 136).

1) *For probes with firmware version earlier than 1.4.3, temperature compensation mode 'internal' is called 'measured'.*

To apply an accurate relative humidity compensation (775), you must also enable temperature compensation (774) and pressure compensation (773).

A.4.3 Status registers

Table 58 Modbus status registers (read-only)

Register number	Address	Description	Data format	Notes
0800	0x2049	Device status	16-bit	0 = Status OK. 1 = Critical error. 2 = Error. 4 = Warning.

Register number	Address	Description	Data format	Notes
0801	0x2050	CO_2 status	16-bit	0 = Status OK. 2 = CO_2 reading not reliable. Appears during transmitter start-up. 256 = Measurement not ready. Appears during transmitter start-up.
0803 [1)]	0x2052	Error code	32-bit field	See table *Error codes in register 0x2052* below.

1) *Register available from probe firmware version 1.4.3 onwards.*

Table 59 Error codes in register 0x2052

Bitmask	Error message	Severity
0x0000	Status OK.	
0x0001	Program memory crc critical error.	Critical
0x0002	Parameter memory crc critical error.	Critical
0x0010	Low supply voltage error.	Error
0x0020	Internal 30V error.	Error
0x0040	Low RX signal error.	Error
0x0080	Internal 8V error.	Error
0x0100	RX signal cut error.	Error
0x1000	Out of measurement range error.	Error
0x2000	Sensor heater error.	Error
0x4000	IR temperature error.	Error
0x8000	FPI slope error.	Error
0x10000	Internal 2.5V error.	Error
0x20000	Internal 1.7V error.	Error
0x40000	Low IR current error.	Error

If several errors are active at the same time, the Modbus error code register contains the sum of currently active error codes.

More information

- Error messages (page 115)

A.5 Device identification objects

Table 60 Device identification objects

Object ID	Object ID (hexadecimal)	Object name	Example contents
0	0x00	VendorName	"Vaisala"
1	0x01	ProductCode	GMP252
2	0x02	MajorMinorVersion	"1.2.3" Software version of the device.
3	0x03	VendorUrl	"http://www.vaisala.com/"
4	0x04	ProductName	"GMP252 Carbon Dioxide Probe"
128	0x80	SerialNumber [1)]	"K0710040"
129	0x81	CalibrationDate [1)]	"2025-08-31" Calibration date in YYYY-MM-DD format. Empty string if not set/valid.
130	0x82	CalibrationText [1)]	"Vaisala/HEL" Calibration information text. Empty string if not set/valid.

1) Vaisala-specific device information.

A.6 Exception responses

Table 61 Modbus exception responses

Code	Name	Reason
01	Illegal function	Unsupported function code
02	Illegal data address	Register address or Object ID out of valid ranges
03	Illegal data value	Otherwise invalid request

Accessing unavailable (temporarily missing) measurement data does not generate a Modbus exception. “Unavailable” value (a quiet NaN for floating point data or 0x8000 for integer data) is returned instead. An exception is generated only for any access outside the applicable register ranges.

A.7 Modbus communication examples

Reading CO_2 value

Device address used in the following examples is 240 (0xF0).
The values returned by the device differ depending on the ambient conditions and/or device settings. Your device might not return exactly same values.

Request		Response	
Bytes on the line (hexadecimal)	**Description**	**Bytes on the line (hexadecimal)**	**Description**
(silence for 3.5 bytes)	Start of Modbus RTU frame	(silence for 3.5 bytes)	Start of Modbus RTU frame
0xF0	GMP25x address	0xF0	GMP25x address
0x03	Function (Read Holding Registers)	0x03	Function (Read Holding Registers)
0x00	Register address	0x04	Number of data bytes
0x00		0xD4	Value of first register (least significant word)
0x00	Number of 16-bit registers to read (2)	0x7A	
0x02		0x43	Value of second register (most significant word)
0xD1	Modbus RTU checksum	0xE8	
0x2A		0x33	Modbus RTU checksum
(silence for 3.5 bytes)	End of Modbus RTU frame	0xAB	
		(silence for 3.5 bytes)	End of Modbus RTU frame

Communication description	
Register address	1 (1-based Modbus documentation format) = 0x0000 (0-based format used in actual communication).
Data format	Two 16-bit Modbus registers interpreted as IEEE 754 binary32 floating point value, least significant word first.
Returned value	43E8D47Ah, which is binary32 representation of 465.65997 (ppm).

Writing volatile compensation pressure value

Request		Response	
Bytes on the line (hexadecimal)	**Description**	**Bytes on the line (hexadecimal)**	**Description**
(silence for 3.5 bytes)	Start of Modbus RTU frame	(silence for 3.5 bytes)	Start of Modbus RTU frame
0xF0	GMP25x address	0xF0	GMP25x address
0x10	Function (Write Multiple Registers)	0x10	Function (Write Multiple Registers)
0x02	Register address	0x02	Register address
0x08		0x08	
0x00	Number of registers to write (2)	0x00	Number of 16-bit registers written (2)
0x02		0x02	
0x04	Number of data bytes	0xD4	Modbus RTU checksum
0x50	Value for the first register (least significant word)	0x93	
0x00		(silence for 3.5 bytes)	End of Modbus RTU frame
0x44	Value for the second register (most significant word)	The response to a write function informs that the function was correctly received by the device. It does not guarantee that the written value was accepted by the device (for example, in case of out-of-range values). To verify that the value was really accepted by the device, read the register value after writing.	
0x7D			
0x0E	Modbus RTU checksum		
0xB7			
(silence for 3.5 bytes)	End of Modbus RTU frame		

Communication description	
Register address	521 (1-based Modbus documentation format) = 0x0208 (0-based format used in actual communication).
Data format	Two 16-bit Modbus registers interpreted as IEEE 754 binary32 floating point value, least significant word first.

Communication description	
Value to write	1013.25 (hPa), in binary32 format 0x447D5000.

A.8 Filtering factor

Modbus register 777 sets the CO_2 filtering factor.

The filtering factor affects the speed at which the latest CO_2 measurement is integrated into the output of the probe. A new measurement is produced approximately every two seconds.

By default, the filtering factor is set to 1.0, which means the latest measurement is shown directly in the output, without any filtering. If the measuring environment produces occasional exceptionally high or low readings that need to be averaged out in the output, filtering can be applied.

To apply filtering, you need to set a filtering factor that determines how much the previous measurements affect the calculation of measurement output. For example, when using filtering factor of 0.1, the new output is a combination of previous measurements (90 %) and the latest measurement (10 %).

Examples of the effect of filtering on output:

- Filtering factor 1.0 = No filtering, the latest measurement is output directly without integrating previous measurements.
- Filtering factor 0.5 = The reading output shows ~75 % of the measurement change after two 2-second measurement cycles and ~93 % after four cycles.
- Filtering factor 0.1 = The reading output shows ~90 % of the measurement change after 22 measurement cycles.

The configuration range of the filtering factor is 0–100 in the 16-bit register: for example, to set the factor to 0.5, set the value of the register to 50.

The following formula is used when calculating the output:

$$o_{\text{new}} = o_{\text{old}} + (m_{\text{new}} - o_{\text{old}}) \times f$$

o_{new} New output
o_{old} Previous output
m_{new} New measurement
f Filtering factor

Maintenance and calibration services

Vaisala offers comprehensive customer care throughout the life cycle of our measurement instruments and systems. Our factory services are provided worldwide with fast deliveries. For more information, see vaisala.com/calibration.

- Vaisala Online Store at store.vaisala.com is available for most countries. You can browse the offering by product model and order the right accessories, spare parts, or maintenance and calibration services.
- To contact your local maintenance and calibration expert, see vaisala.com/contactus.

Warranty

For warranty terms and conditions and the warranty claim process, see vaisala.com/warranty. Note that warranty coverage may not apply if the product is damaged due to normal wear and tear, exceptional operating conditions, negligent handling or installation, or unauthorized modifications. See the applicable supply contract or Conditions of Sale for details of the warranty for each product.

Technical support

You can contact Vaisala technical support at helpdesk@vaisala.com. Provide the following supporting information as applicable:

- Product name, model, and serial number
- Software/Firmware version
- Name and location of the installation site
- Name and contact information of a technical person who can provide further information

When contacting technical support for troubleshooting, also provide the following information as applicable:

- What failed (what worked / did not work)?
- Where did it fail (location and environment)?
- When did it fail (date, immediately / after a while / periodically / randomly)?
- How many failed (only one defect / other same or similar defects / several failures in one unit)?
- What was done when the failure was noticed?
- What was connected to the product and to which connectors?
- What is the input power source type, voltage, and what else (such as lighting, heaters, and motors) was connected to the same power output?
- Are all parts connected and grounded properly? Take a photo to help the troubleshooting.

If available, provide the diagnostics package for the application.

Recycling

Recycle all applicable material according to local regulations.

VAISALA

vaisala.com

AKRIBIS · www.akribis.info · contacto@akribis.info