USER GUIDE

GMP231

Vaisala · Authorized Partner

Distributed by AKRIBIS

M211501EN-F

User Guide

Carbon dioxide probe for CO_2 incubators

GMP231

VAISALA

AKRIBIS · www.akribis.info · contacto@akribis.info

PUBLISHED BY

Vaisala Oyj
Vanha Nurmijärventie 21, FI-01670 Vantaa, Finland
P.O. Box 26, FI-00421 Helsinki, Finland
+358 9 8949 1
vaisala.com
docs.vaisala.com

© Vaisala 2025

No part of this document may be reproduced, published, or publicly displayed in any form or by any means, electronic or mechanical (including photocopying), nor may its contents be modified, translated, adapted, sold, or disclosed to a third party without prior written permission of the copyright holder. Translated document and translated portions of the document are based on the original English version. Parts of the translation may have been created using machine-assisted translation. In ambiguous cases, the English version is applicable, not the translation.

The contents of this document are subject to change without prior notice.

Local rules and regulations applicable to the products and services may vary, and they shall take precedence over the information contained in this document. Vaisala makes no representations on this document's compliance with the local rules and regulations applicable at any given time, and hereby disclaims any and all responsibilities related thereto. You are instructed to confirm the applicability of the local rules and regulations and their effect on the intended use of the products and services.

This document does not create any legally binding obligations for Vaisala towards customers or end users. All legally binding obligations are set forth exclusively in the applicable contract or in the relevant set of General Conditions of Vaisala (vaisala.com/policies).

This product contains software developed by Vaisala or third parties. Use of the software is governed by license terms and conditions included in the applicable contract or, in the absence of separate license terms and conditions, by the General License Conditions of Vaisala Group.

Table of contents

1. About this document ... 9
1.1 Version information ... 9
1.2 Related manuals ... 9
1.3 Documentation conventions ... 9
1.4 Trademarks ... 10
1.5 Patent notice ... 10

2. Product overview ... 12
2.1 Introduction to GMP231 ... 12
2.2 Basic features and options ... 13
2.3 GMP231 parts ... 14
2.4 Operating principle of CO_2 measurement ... 15
2.5 Environmental compensation ... 16
2.5.1 Pressure compensation ... 17
2.5.2 Temperature compensation ... 17
2.5.3 Background gas compensations ... 17
2.6 Probe startup ... 17
2.7 Analog output overrange behavior ... 18
2.8 Safety ... 18
2.8.1 ESD protection ... 19
2.9 Regulatory compliances ... 19

3. Installation ... 20
3.1 Thermal management ... 20
3.2 Avoiding condensation ... 20
3.3 Probe installation depth ... 20
3.4 Dimensions ... 21
3.5 Recommended installation ... 23
3.6 Wiring ... 25
3.7 Power supply ... 26

4. Vaisala Industrial Protocol ... 27
4.1 Overview of Vaisala Industrial Protocol ... 27
4.2 Serial interface settings ... 27
4.3 Physical interface ... 27
4.4 Connecting with a computer ... 27
4.4.1 Installing driver for the USB service cable ... 28
4.4.2 Connecting to probe ... 29
4.5 Serial commands ... 30
4.6 Device information and status ... 32
4.7 Serial line output commands ... 34
4.8 Changing measurement settings ... 38
4.9 Configuring serial line operation ... 41
4.10 Calibration commands ... 43
4.11 Configuring analog output ... 47

4.12 Other commands ... 50

5. I2C interface ... 53
5.1 Overview of I²C interface ... 53
5.1.1 Physical interface ... 53
5.1.2 Communication parameters ... 53
5.1.3 Addressing ... 53
5.1.4 Timing ... 54
5.1.5 Status byte ... 55
5.1.6 Checksum ... 55
5.1.7 Status word ... 55
5.2 Commands ... 57
5.2.1 Get_Interface_Version ... 57
5.2.2 Get_Parameter ... 58
5.2.3 Set_Parameter ... 60
5.2.4 Get_Parameter_Info ... 62
5.2.5 Adjust ... 64
5.3 Adjusting measurement ... 66
5.3.1 1-point adjustment ... 66
5.3.2 2-point adjustment ... 66
5.4 Data registers ... 67
5.4.1 Data formats ... 67
5.4.2 Register table ... 67

6. Maintenance ... 72
6.1 Cleaning ... 72
6.1.1 Chemical tolerance ... 72
6.2 Changing the filter ... 72
6.3 Changing the silicone plug ... 73
6.4 Calibration and adjustment ... 74
6.4.1 Calibration setup ... 74
6.4.2 Effect of environmental compensations ... 76
6.4.3 Limits of adjustment ... 76
6.4.4 Adjustment types ... 76

7. Operating with MI70 indicator ... 78
7.1 Overview of MI70 support ... 78
7.2 Connecting GMP231 to MI70 Indicator ... 78
7.3 Changing environmental compensation settings with MI70 indicator ... 78
7.4 Calibration and adjustment with MI70 indicator ... 80
7.4.1 1-point adjustment with an MI70-compatible reference probe ... 80
7.4.2 1-point adjustment with a reference gas ... 82

8. Troubleshooting ... 84
8.1 Problem situations ... 84
8.2 Analog output error state ... 84

9. Technical data 86
9.1 GMP231 specifications 86
9.2 Spare parts and accessories 88

Online store 89

Warranty 89

Technical support 89

Recycling 89

List of figures

Figure 1 GMP231 installed through a chamber wall.....12
Figure 2 GMP231 parts.....14
Figure 3 CARBOCAP® sensor of the GMP231.....15
Figure 4 CO_2 measurement inside the incubator.....16
Figure 5 Probe installation depth.....21
Figure 6 Probe dimensions without silicone plug.....21
Figure 7 Probe dimensions with silicone plug.....22
Figure 8 Electronics housing dimensions.....22
Figure 9 Attachment bracket dimensions.....23
Figure 10 Recommended installation.....24
Figure 11 PuTTY terminal application.....30
Figure 12 Hardware schematic.....53
Figure 13 Changing the filter.....73
Figure 14 Changing the silicone plug.....74
Figure 15 Inserting the calibration adapter over the filter.....75
Figure 16 CO_2 reading on MI70 screen.....78
Figure 17 CO2 reading with Tcomp and Pcomp on MI70 screen.....79
Figure 18 GMP231 compensation settings on MI70 screen.....79

List of tables

Table 1 Document versions (English)....9
Table 2 Related manuals....9
Table 3 Applicable patents....10
Table 4 GMP231 connector pinout....25
Table 5 Cable....26
Table 6 Default serial interface settings....27
Table 7 Basic serial commands....30
Table 8 Advanced serial commands....31
Table 9 ? Command....32
Table 10 SNUM command....32
Table 11 VERS command....33
Table 12 SYSTEM command....33
Table 13 TIME command....33
Table 14 HELP command....33
Table 15 R command....34
Table 16 S command....35
Table 17 INTV command....35
Table 18 SEND command....35
Table 19 FORM command....36
Table 20 Output commands for FORM command....37
Table 21 Modifiers for FORM command....38
Table 22 Compensation mode commands....38
Table 23 ENV command....39
Table 24 STANDBY command....41
Table 25 SMODE command....41
Table 26 SERI command....42
Table 27 ADDR command....42
Table 28 SDELAY command....43
Table 29 ECHO command....43
Table 30 CCO2 command....43
Table 31 CDATE command....44
Table 32 CTEXT command....45
Table 33 CT command....45
Table 34 CP command....46
Table 35 ASEL command....47
Table 36 AMODE command....47
Table 37 AOVER command....48
Table 38 ATEST command....49
Table 39 PASS command....50
Table 40 OPEN command....50
Table 41 CLOSE command....50
Table 42 ERRS command....51
Table 43 RESET command....51
Table 44 FRESTORE command....52
Table 45 GMP231 I^2C Address....54

Table 46 GMP231 Device Address....54
Table 47 Timing....54
Table 48 Status Byte....55
Table 49 Status word content....56
Table 50 Get_Interface_Version invoke message....58
Table 51 Get_Interface_Version response message....58
Table 52 Get_Parameter invoke message....58
Table 53 Get_Parameter response message....59
Table 54 Read CO_2 measurement sequence example....59
Table 55 Set_Parameter invoke message....60
Table 56 Set_Parameter response message....61
Table 57 Set_Parameter return codes....61
Table 58 Set compensation temperature sequence example....62
Table 59 Get_Parameter_Info invoke message....63
Table 60 Get_Parameter_Info response message....63
Table 61 Parameter data types....63
Table 62 Parameter persistence....64
Table 63 Adjust invoke message....64
Table 64 Adjust response message....64
Table 65 Adjustment subcommands....65
Table 66 Adjustment parameters....65
Table 67 Adjustment return codes....65
Table 68 Data formats....67
Table 69 GMP231 register table....67
Table 70 Possible problem situations and their remedies....84
Table 71 Measurement performance....86
Table 72 Operating environment....87
Table 73 Inputs and outputs....87
Table 74 Mechanical specifications....88
Table 75 Spare parts and accessories for GMP231....88

1. About this document

1.1 Version information

This document provides information for installing, operating, and maintaining the Vaisala CARBOCAP® Carbon Dioxide Probe GMP231.

Table 1 Document versions (English)

Document code	Date	Description
M211501EN-F	February 2025	Updated standby mode recommendations during sterilization cycle. Updated sections: • Thermal management (page 20)
M211501EN-E	April 2020	• Corrected initial CRC calculation value in section Checksum (page 55) • Updated examples in sections Get_Parameter (page 58) and Set_Parameter (page 60) • Updated section GMP231 specifications (page 86) • Updated document to new visual appearance
M211501EN-D	December 2014	Applicable from software version 1.1.0 onward. Updated section Status word (page 55).

1.2 Related manuals

Table 2 Related manuals

Document code	Name
M211603EN	*GMP231 Quick Guide*

1.3 Documentation conventions

WARNING! Warning alerts you to a serious hazard. If you do not read and follow instructions carefully at this point, there is a risk of injury or even death.

CAUTION! Caution warns you of a potential hazard. If you do not read and follow instructions carefully at this point, the product could be damaged or important data could be lost.

Highlights important information on using the product.

Gives information for using the product more efficiently.

Lists tools needed to perform the task.

Indicates that you need to take some notes during the task.

1.4 Trademarks

CARBOCAP® is a registered trademark of Vaisala Oyj.

All other product or company names that may be mentioned in this publication are trade names, trademarks, or registered trademarks of their respective owners.

1.5 Patent notice

This product is protected by the following patents and their corresponding national rights:

Table 3 Applicable patents

Patent issued by	Patent number
United States Patent and Trademark Office	US 5,827,438
	US 6,177,673
European Patent Office	EP0776023
	EP0922972
German Patent and Trade Mark Office	69615635

Patent issued by	Patent number
Japan Patent Office	4263285
Finnish Patent Office	112005
	105598

2. Product overview

2.1 Introduction to GMP231

Vaisala CARBOCAP® Carbon Dioxide Probe GMP231 is designed for incubator manufacturers requiring accurate and reliable carbon dioxide measurements and sterilization durability at high temperatures.

GMP231 probe is based on patented Vaisala CARBOCAP® technology and a new type of infrared light source. The probe can remain in place during high-temperature sterilization cycles that heat the chamber interior to +180 °C. Special design of the probe enables easy installation through the incubator wall and ensures that the sensor optics and electronics are separated and thermally insulated.

Sensor performance is optimized at 5 %CO_2 measurement. GMP231 also has an internal pressure sensor, which allows compensation of the measurement according to ambient pressure. Since dust and most chemicals do not affect the measurement, and the effect of water vapor can be compensated for, GMP231 is accurate and stable at CO_2 incubator conditions.

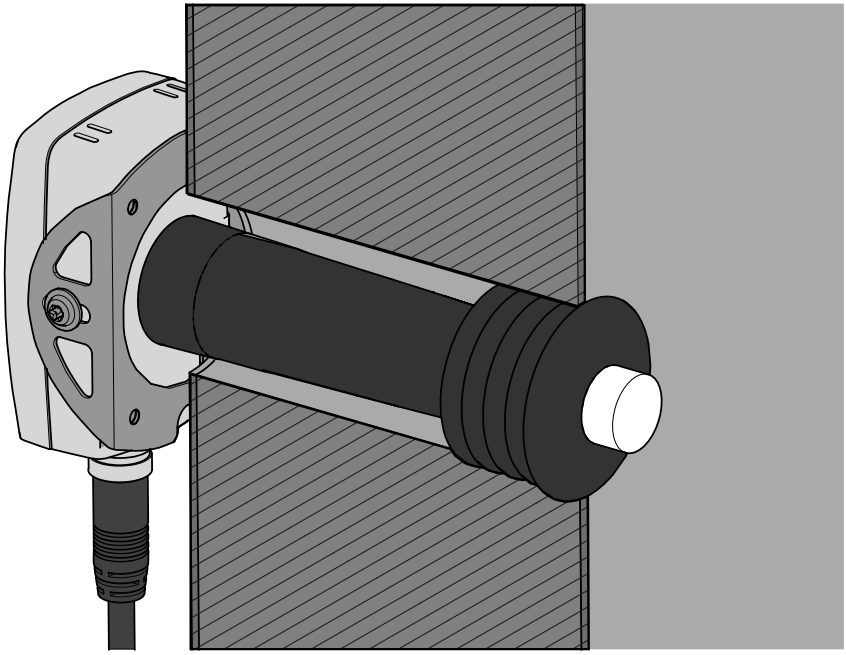

Figure 1 GMP231 installed through a chamber wall

2.2 Basic features and options

- CO_2 measurement range 0 ... 20 %CO_2.
- Temperature durability in standby mode up to +195 °C (+383 °F).
- Vaisala CARBOCAP® CO_2 sensor with excellent long-term stability.
- Measurement compensated for effects of pressure, temperature, and background gas. Pressure compensation based on integrated pressure sensor.
- Heating to avoid condensation on optical elements.
- Analog output: one current output channel (0 ... 20 mA or 4 ... 20 mA).
- Digital output:
  - I^2C.
  - RS-485 (non-isolated) with Vaisala Industrial Protocol.

More information

- Operating principle of CO2 measurement (page 15)
- Environmental compensation (page 16)
- Thermal management (page 20)

2.3 GMP231 parts

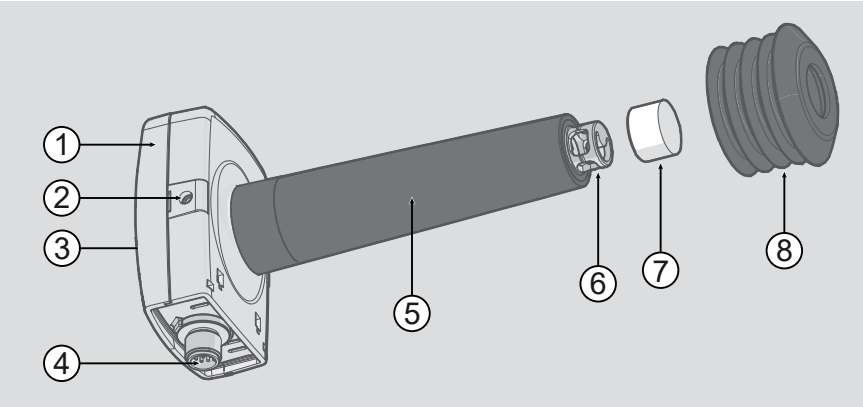

Figure 2 GMP231 parts

1 Electronics housing. Contains the main component board, including the digital pressure sensor.
2 Holes for M4 screws on both sides of the housing. Maximum screw depth 8 mm. Two screws included, type BN 10649 M4.
3 Type label on housing cover (not shown).
4 8-pin M12 connector.
5 Probe body.
6 Measurement cuvette with optics and CARBOCAP® CO_2 sensor.
7 PTFE filter.
8 Silicone plug for sealing the lead-through. Recommended accessory, suitable for ∅ 44 mm lead-throughs.

CAUTION! Do not open the electronics housing; there are no user serviceable parts inside. All wiring is done through the M12 connector (4).

More information

- Wiring (page 25)

2.4 Operating principle of CO_2 measurement

Vaisala CARBOCAP® sensor used in the GMP231 is a silicon-based, non-dispersive infrared (NDIR) sensor for the measurement of gaseous carbon dioxide. It is especially designed to tolerate high temperatures in standby mode, up to +195 °C (+383 °F). This allows it to be used in applications that utilize high temperature for heat sterilization. The operating temperature range of the sensor is 0 ... +70 °C (+32 ... +158 °F).

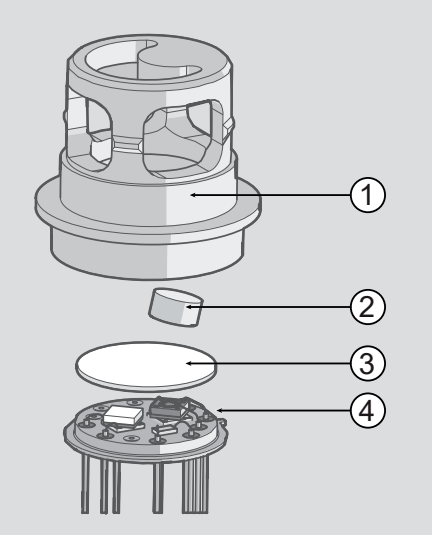

Figure 3 CARBOCAP® sensor of the GMP231

1 Cuvette
2 Mirror
3 Window
4 Sensor chips

The sensitivity to carbon dioxide is based on absorption of infrared light at a characteristic wavelength. The light is emitted by a novel, silicon-based microchip emitter into the cuvette which contains the gas to be measured. After reflection from the mirror, the light intensity is measured with a thermopile chip at a wavelength chosen by a micromechanical Fabry–Pérot interferometer (FPI) and a band pass filter. A hermetically sealed sapphire window is used to protect the sensor chips from moisture and contamination. A heater chip is utilized to prevent condensation in normal operation.

The carbon dioxide measurement consists of two steps: First, the FPI is electrically tuned so that its pass band coincides with the characteristic absorption wavelength of carbon dioxide and the signal is recorded. Second, the pass band is shifted to a wavelength where no absorption occurs in order to get a reference signal. The ratio of these two signals, one at the absorption wavelength and the other at the reference wavelength, gives the fraction of light absorption from which the carbon dioxide concentration is calculated. The reference signal compensates the possible effects of sensor aging and signal attenuation due to dirt on optical surfaces, making the sensor very stable over time.

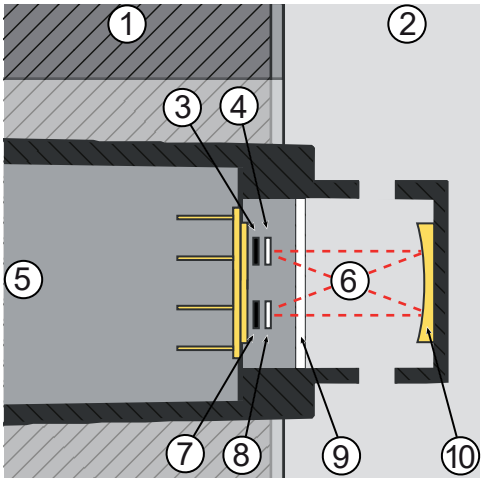

Figure 4 CO_2 measurement inside the incubator

1 Chamber wall
2 Chamber interior
3 Light source
4 Band pass filter
5 Ambient air (400 ... 1000 ppm CO_2)
6 Light absorbed by CO_2 in the incubator gas
7 Thermopile detector
8 Fabry-Perot interferometer
9 Sapphire window. Separates the sensor's active components from the measured environment.
10 Gold-plated mirror

2.5 Environmental compensation

GMP231 improves the CO_2 measurement accuracy by applying various environmental compensations. GMP231 compensates for the effects of:

- Pressure
- Temperature
- Background gas oxygen (O_2) content
- Background gas relative humidity (%RH)

Compensation parameters are configured on the order form when ordering the probe, and can later be updated using serial commands, MI70 Indicator, or I^2C protocol. If the probe is integrated in a system that measures one or more of the compensation parameters, they can be updated to the probe continuously.

You can also turn off any of the compensations. In that case, GMP231 uses the default compensation value that is mathematically neutral for the probe's internal compensation model.

For more information on the effect of the compensations on measurement accuracy, see GMP231 specifications (page 86).

2.5.1 Pressure compensation

There is a pressure sensor on the component board of the GMP231 that provides a live measurement of ambient pressure. GMP231 can compensate the CO_2 measurement based on this pressure reading, or it can use a fixed setpoint. Using the GMP231's own sensor is recommended for most applications.

If pressure compensation is turned off, GMP231 uses the default compensation value of 1013.2 hPa.

2.5.2 Temperature compensation

GMP231 can measure the approximate temperature of the CARBOCAP® sensor for compensation, or use a fixed setpoint. The temperature measurement is accurate enough to be useful for compensation, and is recommended for use unless a dedicated temperature measurement is available and can be regularly updated to the GMP231.

If temperature compensation is turned off, GMP231 uses the default value of +37 °C (+98.6 °F).

2.5.3 Background gas compensations

Compensation for background gas parameters are based on setpoint values only, as GMP231 has no internal measurement for oxygen concentration or humidity. The default setpoint values are as follows:

- Oxygen concentration: 19.7 %O_2
- Relative humidity: 93 %RH

If background gas compensations are turned off, GMP231 uses the value 0% for both.

2.6 Probe startup

When powered on, GMP231 starts up within 10 seconds. Measurements from the outputs (digital and analog) become available during this time but note that they only reach specified accuracy after a one minute warm-up period. For this reason, you should design the incubator's control system so that it does not rely on measurements from GMP231 during this time.

> Specifically note that the CO_2 reading rises to the correct reading as the sensor's infrared emitter achieves operation temperature.

2.7 Analog output overrange behavior

Analog output of the GMP231 has a defined behavior when the values measured by the probe are outside the scaled analog output range:

- Output is allowed to go 10% over the scaled range.
- Output is set to error state when measured value is more than 10% outside the scaled range.
- Output resumes normal function when measured value returns to within 10% of the selected range.

For example, consider a GMP231 with 0 ... 20 mA analog output, scaled to 0 ... 10 %CO_2.

- When measured CO_2 rises above 10 %CO_2, the output rises above 20 mA.
- The output keeps rising until the measurement is 11 %CO_2, at which point the probe outputs 22 mA.
- If the CO_2 level rises above 11 %CO2, the output enters the error state, which is 23 mA for the 0 ... 20 mA output.

This overrange and error state behavior is specific to the analog output, and does not affect the readings provided by the digital outputs.

You can change the analog output overrange behavior using the **AOVER** command.

More information

- Analog output error state (page 84)

2.8 Safety

The probe delivered to you has been tested for safety and approved as shipped from the factory. Note the following precautions:

WARNING! When returning a product for calibration or repair, make sure it has not been exposed to dangerous contamination, and is safe to handle without special precautions.

CAUTION! Do not modify the unit or use it in ways not described in the documentation. Improper modification or use may lead to safety hazards, equipment damage, failure to perform according to specification, or decreased equipment lifetime.

CAUTION! Do not attempt to open the probe body. There are no user serviceable parts inside the probe body.

2.8.1 ESD protection

Electrostatic discharge (ESD) can damage electronic circuits. Vaisala products are adequately protected against ESD for their intended use. However, it is possible to damage the product by delivering electrostatic discharges when touching, removing, or inserting any objects in the equipment housing.

To avoid delivering high static voltages to the product:

- Handle ESD-sensitive components on a properly grounded and protected ESD workbench or by grounding yourself to the equipment chassis with a wrist strap and a resistive connection cord.
- If you are unable to take either precaution, touch a conductive part of the equipment chassis with your other hand before touching ESD-sensitive components.
- Hold component boards by the edges and avoid touching component contacts.

2.9 Regulatory compliances

The probe is in conformity with the provisions of the following EU directives:

- EMC-Directive
- RoHS-Directive

The conformity is declared with using the following standards:

- EN 50581: Technical documentation for the assessment of electrical and electronic products with respect to the restriction of hazardous substances.
- EN 61326-1: Electrical equipment for measurement, control, and laboratory use – Immunity requirements for equipment to be used in a basic EMC environment.
- EN 55032: Class B. Electromagnetic compatibility of multimedia and information technology equipment – Emission requirements.

3. Installation

3.1 Thermal management

GMP231 is designed to remain installed during typical heat sterilization cycles that raise the chamber temperature to 180 °C (356 °F). Since 180 °C is the target temperature for sterilization, it is likely that there are hotspots inside the chamber that are above this temperature. Avoid installing the GMP231 near such hotspots, for example near heating elements. Do not expose the GMP231 to temperatures higher than 195 °C / 383 °F.

The following considerations are most important for achieving the specified heat durability and measurement stability:

- Only the sensor and its filter should be exposed to heat. The filter must be completely in the heated chamber. The probe body must remain inside the unheated chamber wall so that only the end of the probe body extends exactly 2.5 mm into the chamber.
- GMP231 automatically stops its measurement cycle if it detects a high temperature. For best results, Vaisala recommends configuring the incubator's control system to set GMP231 to standby mode (or to power it off) when the sterilization cycle is started.
- The installation tube must be sealed from the chamber side to limit heat conduction, and to prevent CO_2 in the chamber from entering the probe. Vaisala recommends a 44 mm diameter installation tube together with Vaisala's silicone plug.
- If the chamber wall contains heating elements, or has a construction where hot air is circulated inside the wall, design the installation tube so that excessive heat is not conducted to the GMP231.

3.2 Avoiding condensation

The sensor head of the GMP231 is heated during normal operation, which prevents condensation from forming inside the filter and on the optical surfaces. The heating is not on when GMP231 is in standby mode or unpowered. For this reason, keep the probe powered and operating when the incubator is in use and humidity inside the chamber is high.

Correct installation depth of the probe is also important for preventing condensation from running to the sensor along the chamber wall.

3.3 Probe installation depth

GMP231 must be installed so that only the sensor element and the filter are inside the chamber. If the probe is longer than the installation tube, the extra length should extend to the outside of the chamber.

The installation depth must be 2.5 mm. This installation depth provides the specified heat durability of the probe, and allows the silicone plug to seal the Ø 44 mm installation tube properly.

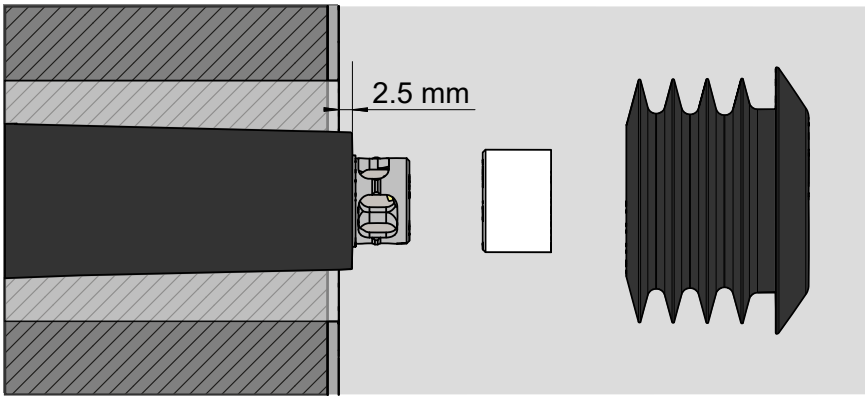

Figure 5 Probe installation depth

3.4 Dimensions

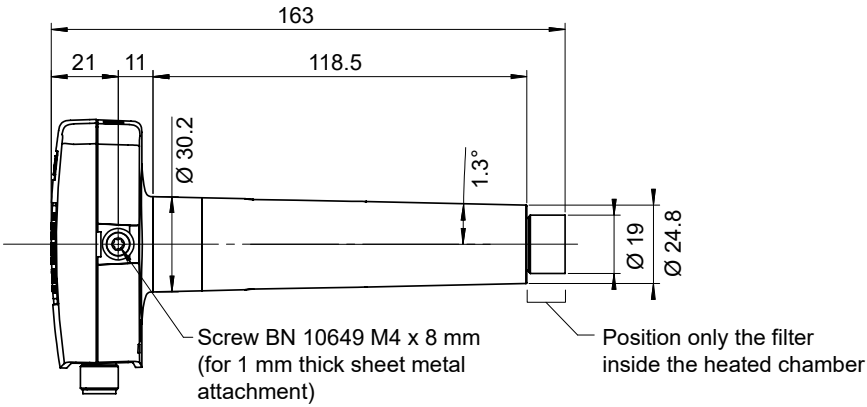

Figure 6 Probe dimensions without silicone plug

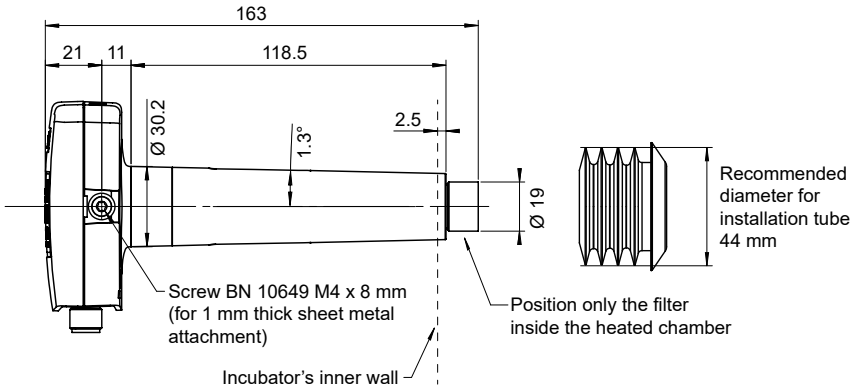

Figure 7 Probe dimensions with silicone plug

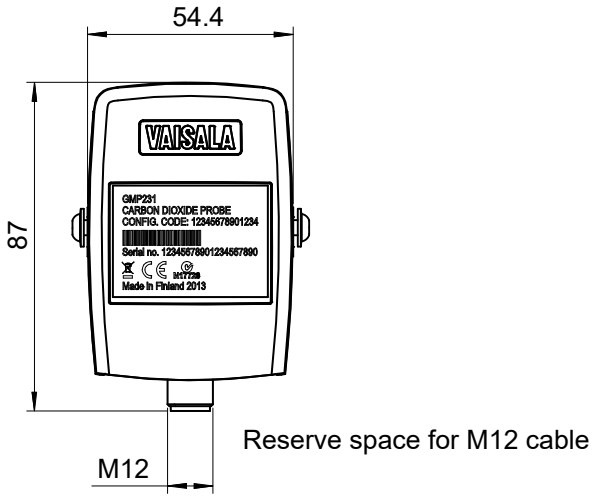

Figure 8 Electronics housing dimensions

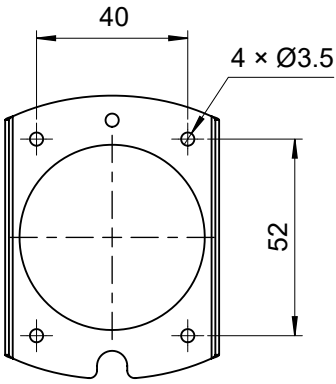

Figure 9 Attachment bracket dimensions

3.5 Recommended installation

GMP231 is designed to be installed through a chamber wall, and attached to the chamber chassis using an attachment bracket and the two screw holes on the side of the probe. As the installation depth of the probe inside the chamber is critical, the mounting method must allow the probe to be positioned exactly.

The probe and electronics housing must remain outside the heated chamber. The electronics housing should be in a ventilated space that is open to ambient air.

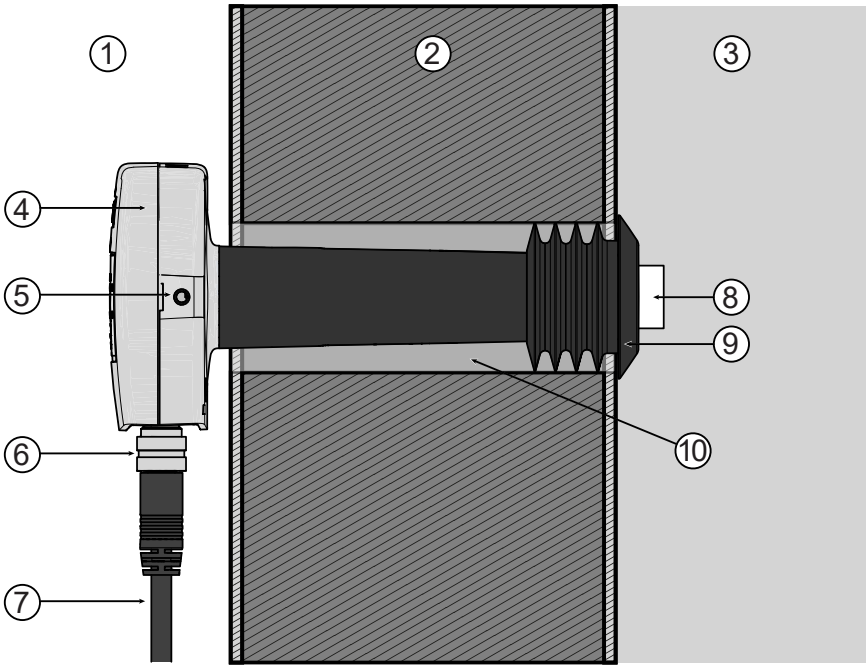

Figure 10 Recommended installation

1 Ambient air
2 Chamber wall
3 Chamber interior
4 GMP231 electronics housing
5 M4 screw holes on both sides of the probe housing
6 8-pin M12 connector
7 Cable
8 CARBOCAP® sensor under PTFE filter. The filter must be inside the chamber completely.
9 Silicone plug. Insert the plug over the probe from inside the chamber.
10 Ø 44 mm installation tube through the chamber wall. The diameter is important for proper sealing by the silicone plug.

More information

- Wiring (page 25)

3.6 Wiring

GMP231 provides several outputs you can use. Connect the output pins you need, and the power supply and ground pins. Use a shielded cable, and connect the shield to the chassis of the GMP231's M12 connector, and to ground on the other side.

Ground pin 5 to put the probe in standby mode (stops CO_2 measurement). The probe resumes normal measurement operation when pin 5 is no longer grounded, unless its internal measurement shows the temperature is too high.

Table 4 GMP231 connector pinout

Male 8-pin M12	Pin #	Function
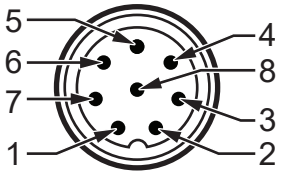	1	I^2C SDA
	2	RS-485 D-
	3	I^2C SCL
	4	Analog output +
	5	Standby
	6	RS-485 D+
	7	Power supply +
	8	Ground
	-	Shield

Vaisala's standard connection cable for the GMP231 (item code DRW240977) is a 90 cm long cable with female 8-pin M12 connector on one end, and open ended wires on the other. It supports all outputs from the GMP231, and connects the cable shield to the connector chassis.

Table 5 Cable

Female 8-pin M12	Pin #	Function	Wire color
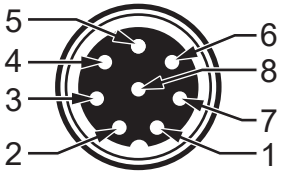	1	I^2C SDA	White
	2	RS-485 D-	Brown
	3	I^2C SCL	Green
	4	Analog output +	Yellow
	5	Standby	Gray
	6	RS-485 D+	Pink
	7	Power supply +	Blue
	8	Ground	Red
	-	Shield	Black

3.7 Power supply

The supply voltage range of GMP231 is 11 ... 30 VDC. If the analog output is used, the supply voltage range is 20 ... 30 VDC.

The maximum power consumption is 1 W.

4. Vaisala Industrial Protocol

4.1 Overview of Vaisala Industrial Protocol

RS-485 line of the GMP231 provides an implementation of the Vaisala Industrial Protocol that can be used for service and configuration use, or for interfacing with the incubator's control system. The protocol is a plaintext protocol suitable for use both by human operators and automated systems.

4.2 Serial interface settings

Table 6 Default serial interface settings

Property	Value
Bit rate	19200
Parity	None
Data bits	8
Stop bit	1
Flow control	None

4.3 Physical interface

The physical interface is a non-isolated 3-wire interface. The data lines are RS-485 D- and RS-485 D+. Ground is shared with power supply.

The connector is an 8-pin male M12.

More information

- Wiring (page 25)

4.4 Connecting with a computer

Connecting with a computer allows you to configure and troubleshoot your probe using serial line commands.

When connecting using a computer, use a compatible Vaisala USB service cable (item code 221040) and a suitable terminal application.

More information

- Installing driver for the USB service cable (page 28)
- Connecting to probe (page 29)
- Serial commands (page 30)

4.4.1 Installing driver for the USB service cable

Only Windows® operating systems are supported by the driver of the USB service cable.

1. Connect the USB service cable to a USB port on your computer. Windows® detects the new device and installs the appropriate driver.
2. Open **Device Manager** from the Windows® Start menu. Use search to find it if necessary (search for "device").
3. Locate the cable in the list of devices:
   - If the device is listed as **Vaisala USB Device** with a COM port number in brackets, the cable is ready for use.
   - If the device is listed as **Vaisala USB Instrument Cable** without a COM port number listed, you must install the driver manually.

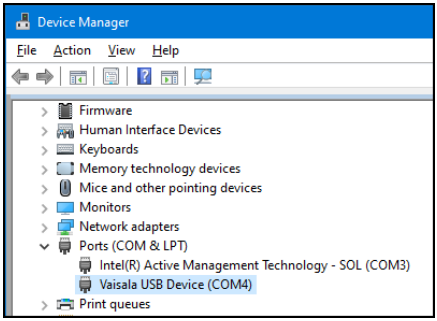

4. To install the driver manually:
   a. Disconnect the USB service cable from the computer.
   b. Download the Vaisala USB driver at vaisala.com/software (select the appropriate USB Instrument Driver Setup for your cable).
   c. Extract the driver zip file and run the USB driver installation program `Vaisala USB Device Driver Setup.exe`. Accept the installation defaults.
   d. Go back to step 1 and verify that the driver installation works as expected.

4.4.2 Connecting to probe

The following steps describe how to connect to the probe using the PuTTY terminal application for Windows (available for download at www.vaisala.com) and a USB service cable:

1. Connect the USB service cable between your computer and the M12 connector of the probe.
2. Start the PuTTY application.
3. Select **Connection > Serial & USB** and check that the correct COM port is selected in the **Serial or USB line to connect to** field.

   If you are using the PuTTY terminal application supplied by Vaisala, you can press the **USB Finder** button to open the **Vaisala USB Instrument Finder** program.
4. Check that the other serial settings are correct for your connection, and change if necessary. **Flow control** should be set to **None** unless you have a reason to change it.
5. Select **Open** to open the connection window and start using the serial line.

If PuTTY is unable to open the serial port you selected, it shows you an error message instead. If this happens, restart PuTTY and check the settings.

6. You may need to adjust the **Local echo** setting in the **Terminal** category to see what you are typing on the serial line. To access the configuration screen while a session is running, click the right mouse button over the session window, and select **Change Settings** from the pop-up menu.

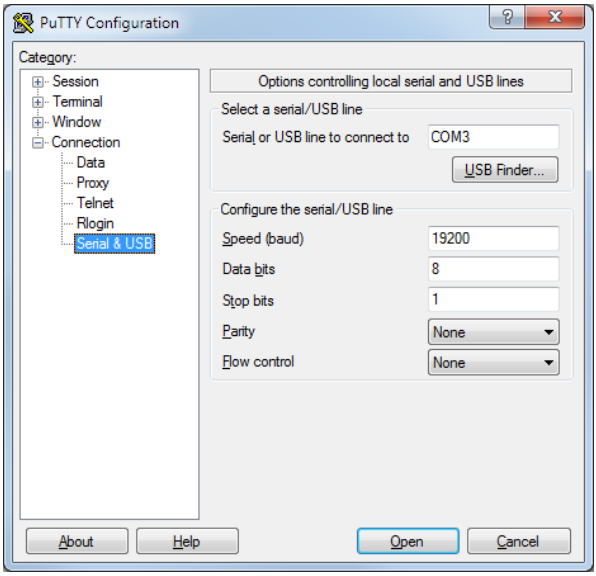

Figure 11 PuTTY terminal application

4.5 Serial commands

All commands can be issued either in uppercase or lowercase. In the command examples, the keyboard input by the user is in **bold**.

The notation <cr> refers to pressing the carriage return (**Enter**) key on your computer keyboard. Enter a <cr> to clear the command buffer before starting to enter commands.

Table 7 Basic serial commands

Command	Description
?	Show probe information.
CLOSE	Close connection to probe (POLL mode)
ECHO	Show or set remote echo mode.
ENV	Show or set environmental parameters.

Command	Description
ERRS	Show currently active errors.
FORM [modifier string]	Show or set output format.
HELP	Show list of currently available serial commands.
INTV [0 ... 9999 s/min/h]	Set continuous output interval for R command.
OPEN [address]	Open connection to probe in POLL mode
PASS [1300]	Access advanced serial commands.
R	Start the continuous outputting.
RESET	Reset the probe.
S	Stop the continuous outputting.
SDELAY [0 ... 255]	Show or set serial line transmission delay in milliseconds.
SEND	Output measurement message once.
SERI [baud data stop parity]	Show or set the serial interface settings
SMODE [mode]	Show or set startup serial mode: RUN, STOP, or POLL .
SNUM	Show probe serial number.
STANDBY [on/off]	Standby mode on/off (turn off measurement)
SYSTEM	Show probe firmware information
TIME	Show probe operation hours and uptime
VERS	Show probe firmware version.

Table 8 Advanced serial commands

Command	Description
ADDR [0 … 254]	Show or set probe address.
AMODE	Show or set analog output mode.
AOVER	Show or set analog output overrange and clipping behavior.
ASEL	Show or set analog output parameter.
ATEST	Test analog output.
CCO2	Adjust CO_2 measurement gain and offset.
CDATE	Show or set calibration date.
CP	Adjust pressure measurement offset.
CT	Adjust temperature measurement offset.

Command	Description
CTEXT	Show or set calibration information.
FRESTORE	Restore probe to factory settings.
O2CMODE	Show or set oxygen compensation mode.
PCMODE	Show or set pressure compensation mode.
RHCMODE	Show or set humidity compensation mode.
TCMODE	Show or set temperature compensation mode.

4.6 Device information and status

Table 9 ? Command

Syntax	Description
?<cr>	Show listing of device information.
??<cr>	Show listing of device information even if the device is in POLL mode but its address is unknown. Do not use the **??** command if you have more than one device on an RS-485 line.

Example:

```
?
Device              : GMP231
Copyright           : Copyright (c) Vaisala Oyj 2013. All rights reserved.
SW Name             : GMP231
SW version          : 1.0.1.1537
Snum                : J1320082
Calibrated          : 2014-03-11
Address             : 1
Smode               : STOP
```

Table 10 SNUM command

Syntax	Description
SNUM<cr>	Show serial number of the probe.

Example:

```
snum
Serial number       : J1320082
```

Table 11 VERS command

Syntax	Description
VERS	Show firmware version of the probe.

Example:

```
vers
GMP231 / 1.1.0.1537
```

Table 12 SYSTEM command

Syntax	Description
SYSTEM<cr>	Show probe firmware information.

Example:

```
system
Device Name          : GMP231
SW Name              : GMP231
SW version           : 1.1.0.1537
```

Table 13 TIME command

Syntax	Description
TIME	Show how long the probe has been in operation since the last startup or reset. The operation counter is in format hh:mm:ss. Full days and hours are retained in the counter, minutes and seconds are cleared at reset.

Example:

```
time
00000:23:56:49 Up time: 3409 s
```

Cumulative uptime is 23 hours, 56 minutes, and 49 seconds, uptime since last reset is 3409 seconds.

Table 14 HELP command

Syntax	Description
HELP<cr>	Show list of the currently available serial commands.

Syntax	Description
Example (shows basic commands, advanced commands are not enabled):	
CLOSE **ECHO** **ENV** **ERRS** **FORM** **HELP** **INTV** **PASS** **R** **RESET** **S** **SDELAY** **SEND** **SERI** **SMODE** **SNUM** **STANDBY** **SYSTEM** **TIME** **VERS**	

4.7 Serial line output commands

Table 15 R command

Syntax	Description
R<cr>	Start the continuous outputting of measurement values as an ASCII text string to the serial line. The probe keeps outputting measurement messages at the interval that has been set with the **INTV** command until stopped with the **S** command or with the **Esc** key.
Example (measurement message in default format):	
r CO2= 490 ppm CO2= 490 ppm CO2= 491 ppm CO2= 491 ppm CO2= 491 ppm ...	

Table 16 S command

Syntax	Description
S<cr>	Stop the continuous outputting that was started with the **R** command.

Example:

```
...
CO2= 5.1 %CO2
CO2= 5.0 %CO2
CO2= 5.0 %CO2
s
```

Table 17 INTV command

Syntax	Description
INTV [n xxx]<cr>	Change the output interval of the automatically repeating measurement messages. The measurement messages are repeated in the RUN mode, or after the **R** command has been given.

	Set the output interval.
	• `n` = interval, range 0 ... 255
	• `xxx` = unit for interval setting.
	  • `s` = seconds
	  • `min` = minutes
	  • `h` = hours
	If you set the interval to `0`, the output messages are output as quickly as they are generated, without additional delay.

Example:

```
intv 5 s
Output interval     : 5 S
```

Table 18 SEND command

Syntax	Description
SEND<cr>	Output a single measurement message.

Example:

```
send
CO2=  1702 ppm
```

Table 19 FORM command

Syntax	Description
FORM<cr>	Change the measurement message sent by the probe.
FORM /<cr>	Reset measurement format to default.
FORM [modifier string]<cr>	modifier string = String of parameters and modifiers that defines the output format, length 1 ... 150 characters. Maximum length may be shorter when text strings are used. For more information, see Table 20 (page 37) and Table 21 (page 38).

Syntax	Description

Examples:
Example of default output (continuous output from RUN mode):
`CO2=  860 ppm`
`CO2=  861 ppm`
`CO2=  861 ppm`
`...`
Command to set output format as %CO_2:
`form 3.1 "CO2=" CO2% " " U4 #r #n`
Output example:
`CO2=  5.1 %CO2`
`CO2=  5.1 %CO2`
`CO2=  5.0 %CO2`
`...`
Command to set output format as CO_2 ppm with Modulus-65536 checksum:
`form 6.0 "CO2=" CO2 " " U3 " " CS4 #r #n`
Output example:
`CO2=  3563 ppm 9F`
`CO2=  3562 ppm 9E`
`CO2=  3559 ppm A4`
`...`
Command to set output format as CO_2 ppm, with `start of text` (ASCII character 002) and `end of text` (003) ASCII codes, and without line feed and carriage return at the end:
`form #002 6.0 "CO2=" CO2 " " U3 #003`
Output example (ASCII codes not visible here):
`CO2=  866 ppm CO2=  866 ppm CO2=  867 ppm CO2=  867 ppm`
`CO2=  867 ppm CO2=  868 ppm CO2=  868 ppm CO2=  869 ppm`
`...`	

Table 20 Output commands for FORM command

Measured parameter	Abbreviation in FORM command
Carbon dioxide in ppm	`CO2`

Measured parameter	Abbreviation in FORM command
Carbon dioxide in percent	`CO2%`
Currently used temperature compensation value	`TCOMP`
Currently used pressure compensation value	`PCOMP`
Currently used oxygen concentration compensation value	`O2COMP`
Currently used relative humidity compensation value	`RHCOMP`

Table 21 Modifiers for FORM command

Modifier	Description
`x.y`	Length modifier (number of digits and decimal places)
`#t`	Tabulator
`#r`	Carriage-return
`#n`	Line feed
`""`	String constant, length 1 ... 15 characters
`#xxx`	ASCII code value (decimal) of a special character; for example, **`#027`** for ESC
`ADDR`	Probe address (0 ... 254)
`SN`	Probe serial number
`TIME`	Cumulative operating hours of the probe.
`Ux`	Shows the name of the measurement unit using “x” number of characters. For example, **`U3`** shows the name of the measurement unit with three characters
`CS4`	Modulus-65536 checksum of message sent so far, ASCII encoded hexadecimal notation
`CSX`	NMEA xor-checksum of message sent so far, ASCII encoded hexadecimal notation

4.8 Changing measurement settings

Table 22 Compensation mode commands

Syntax	Description
`PCMODE` `[on | off | measured]`<cr>	Show current compensation value for pressure compensation mode.

Syntax	Description
TCMODE [on | off | measured]<cr>	Show current compensation value for temperature compensation mode.
O2CMODE [on | off]<cr>	Show current compensation value for oxygen compensation mode.
RHCMODE [on | off]<cr>	Show current compensation value for relative humidity compensation mode.
	• **on** = Compensation enabled using setpoint value. • **off** = Compensation disabled, neutral value used. • **measured** = Compensation enabled using internal measurement. Available only for pressure and temperature compensations.

Example (check temperature compensation mode):

```
pass 1300
tcmode
T COMP MODE          : ON
```

Example (change temperature compensation mode to use internal measurement):

```
pass 1300
tcmode measured
T COMP MODE          : MEASURED
```

Table 23 ENV command

Syntax	Description
ENV [temp|pres|oxy|hum] [value]<cr>	Set new permanent compensation values and store them in EEPROM. • **temp** = Compensation temperature. Range -40 ... 100 °C. • **pres** = Compensation pressure. Range 500 ... 1150 hPa. • **oxy** = Oxygen content of background gas. Range 0 ... 100%. • **hum** = Relative humidity of background gas. Range 0 ... 100%.

Syntax	Description
ENV [xtemp|xpres|xoxy|xhum] [value]<cr>	Set new compensation values and store them in RAM. • **xtemp** = Compensation temperature. Range -40 ... 100 °C. • **xpres** = Compensation pressure. Range 500 ... 1150 hPa. • **xoxy** = Oxygen content of background gas. Range 0 ... 100%. • **xhum** = Relative humidity of background gas. Range 0 ... 100%.

Values of the parameters are stored in two places: EEPROM (non-volatile memory, values retained during power off) and RAM (volatile memory that loses the values when probe is reset, and where values are loaded from non-volatile memory at startup). As the number of writes to EEPROM is limited to 30000 cycles by memory implementation, you must write all continuously updated values to RAM to avoid wearing out the EEPROM.

Example (Show current compensation values; all compensations are enabled. Note that temperature and pressure compensations use internal measurement, so the value in use is constantly changing):

```
env
Temperature (C)     : 37.00
Pressure (hPa)      : 1013.20
Oxygen (%O2)        : 19.70
Humidity (%RH)      : 93.00

In use:
Temperature (C)     : 23.10
Pressure (hPa)      : 1011.28
Oxygen (%O2)        : 19.70
Humidity (%RH)      : 93.00
```

The following example sets temperature compensation to setpoint mode, and changes temperature setpoint value to 37.2 in RAM.

```
pass 1300
tcmode on
T COMP MODE         : ON
env xtemp 37.2
In eeprom:
Temperature (C)     : 37.00
Pressure (hPa)      : 1013.20
Oxygen (%O2)        : 19.70
Humidity (%RH)      : 93.00

In use:
Temperature (C)     : 37.2
Pressure (hPa)      : 1013.20
Oxygen (%O2)        : 19.70
Humidity (%RH)      : 93.00
```

If temperature and pressure compensations are configured to use internally measured values, they continuously update the values in RAM, overriding any temperature and pressure values that are written to RAM with the **ENV** command.

Table 24 STANDBY command

Syntax	Description
STANDBY [on | off]<cr>	Set the probe to standby mode. In standby mode, the CO_2 measurement is disabled. Probe returns to the normal measurement when you give the **STANDBY** `off` command or reset the probe.

Example (enable standby mode):
`standby on`
`Standby mode : ON`	

4.9 Configuring serial line operation

Table 25 SMODE command

Syntax	Description
SMODE [mode]<cr>	Set serial line start-up operating mode. Available modes: • `STOP` = No automatic output. All commands available. Default mode. • `RUN` = Automatic output of measurement messages. You can stop the output with the **S** command, and continue again with the **R** command. • `POLL` = No automatic output. Will respond to addressed **SEND** command and **??** command. You can use other commands after opening a connection using an addressed **OPEN** command. Use with RS- 485 buses where multiple probes can share the same line.

Example:
`smode poll`
`Serial mode : POLL`	

Table 26 SERI command

Syntax	Description
SERI<cr>	Show current serial line settings.

SERI [b p d s]<cr>	Set new serial line settings. The new settings are taken into use when the probe is reset or powered up.
	• b = baud rate (9600, 19200, or 19200)
	• p = parity
	  • n = none
	  • e = even
	  • o = odd
	• d = data bits (7 or 8)
	• s = stop bits (1 or 2)

Example (shows default settings):

```
seri
Com1 Baud rate      : 19200
Com1 Parity         : N
Com1 Data bits      : 8
Com1 Stop bits      : 1
```

Example (set serial line to 9600 baud, even, 7 data bits, and 1 stop bit):

```
seri 9600 e 7 1
OK
seri
Com1 Baud rate      : 9600
Com1 Parity         : E
Com1 Data bits      : 7
Com1 Stop bits      : 1
```

Table 27 ADDR command

Syntax	Description
ADDR<cr>	Show current device address. Addresses are required for POLL mode.
ADDR [aaa]<cr>	Set new device address. • aaa = Device address of the probe, range 0 ... 254 (default = 0).

Example (change probe address to 52):

```
pass 1300
addr 52
    Address             :    52
```

Table 28 SDELAY command

Syntax	Description
SDELAY<cr>	Show serial line transmission delay.
SDELAY [delay]<cr>	Set a new serial line transmission delay, range 0 ... 255 (milliseconds)
Example (set delay to 50 milliseconds):	

```
sdelay 50
Serial delay   :        50
```

Table 29 ECHO command

Syntax	Description
ECHO [on/off]<cr>	Enable or disable echoing of characters received by the probe.
Example:	

```
echo
Echo                : OFF
```

4.10 Calibration commands

Before calibrating GMP231 using serial line commands, see Calibration and adjustment (page 74).
Make sure that the environmental compensation settings of the GMP231 are properly set for your calibration environment.

Table 30 CCO2 command

Syntax	Description
cco2<cr>	Show current user adjustment status.
cco2 -lo [co2]<cr> **cco2** -hi [co2]<cr>	Perform a 1-point (only either low or high concentration) or 2-point (both low and high concentrations) calibration and adjustment. **-lo** = Adjustment at low concentration (under 2 %CO_2) **-hi** = Adjustment at high concentration (over 2 %CO_2) **co2** = CO_2 concentration reference in ppm

Syntax	Description
cco2 -save<cr>	Save the currently entered adjustments. Successfully saving the adjustment clears the calibration date (**cdate** command) and calibration text (**ctext** command) that have been stored in the probe. Use those commands to enter a new calibration date and text.
cco2 -cancel<cr>	Cancel currently entered adjustments.
cco2 -reset<cr>	Clear user adjustments.

Example (show current user adjustment status – no adjustment done):

```
pass 1300
cco2
1.Ref. point low        0
1.Meas. point low       0
2.Ref. point low   200000
2.Meas. point low  200000
Gain           : 1.0000
Offset         : 0.0000
```

Example (one-point adjustment in 5 % concentration (50000 ppm)):

```
pass 1300
cco2 -lo 50000
OK
cco2 -save
OK
```

Table 31 CDATE command

Syntax	Description
CDATE<cr>	Show calibration date.
CDATE [yyyy mm dd]<cr>	Set a new calibration date. • yyyy = Year of calibration in four digits. • mm = Month of calibration in two digits. • dd = Day of calibration in two digits.

Syntax	Description
Example (show currently stored calibration date):	

`>pass 1300`
`>cdate`
`Calibration date  :  2013-10-03`	

Example (set calibration date to 2014-03-10):	

`>pass 1300`
`>cdate 2014 03 10`
`Calibration date  :  2014-03-10`	

Table 32 CTEXT command

Syntax	Description
CTEXT<cr>	Show calibration information text.
CTEXT [text]<cr>	Calibration information text string, max 19 characters. If you want to use spaces in the string, enclose the text in quotes.
Example (shows the text “Calibrated at” followed by the currently stored calibration text):	

`pass 1300`
`ctext`
`Calibrated at Vaisala`	

Example (set calibration text to “Lab_1”):	

`pass 1300`
`ctext Lab_1`
`Calibrated at Lab_1`	

Table 33 CT command

Syntax	Description
CT [temp]<cr>	Perform an offset correction to the internal temperature measurement. **temp** = correct temperature in degrees Celsius (°C).
CT [-reset]<cr>	Clear the offset adjustment from internal temperature measurement.

Syntax	Description
Example (adjust the internal temperature measurement to 23 °C at the current conditions):	

`pass 1300`
`ct 23`
`OK`	

Example (clear the offset adjustment from internal temperature measurement):	

`pass 1300`
`ct -reset`
`OK`	

Table 34 CP command

Syntax	Description
CP [pressure]<cr>	Perform an offset correction to the internal pressure measurement. `pressure` = Correct pressure in hectopascals (hPa).
CP [-reset]<cr>	Clear the offset adjustment from internal pressure measurement.
Example (adjust the internal pressure measurement to 990 hPa at the current conditions):	

`pass 1300`
`cp 990`
`OK`	

Example (clear the offset adjustment from internal pressure measurement):	

`pass 1300`
`cp -reset`
`OK`	

More information

- Changing measurement settings (page 38)

4.11 Configuring analog output

Table 35 ASEL command

Syntax	Description
ASEL [channel]<cr>	Show the parameter and scaling of the analog output in ppm. **channel** = Analog output channel, only 1 can be selected.
ASEL [channel] [parameter lowlimit highlimit]<cr>	Set the parameter and scaling of the analog output. • **parameter** = Parameter that is output on analog channel. Only parameter available is CO2. • **lowlimit** = Lower limit of channel scaling in ppm. • **highlimit** = High limit of channel scaling in ppm.
Example (change channel scaling to 0 ... 5 %): **pass** 1300 **asel** 1 co2 0 50000 Aout 1 quantity : CO2(0 ... 50000)	

Table 36 AMODE command

Syntax	Description
AMODE [channel]<cr>	Show currently set analog output limits and error level. **channel** = Analog output channel, only 1 can be selected.
AMODE [channel lo_value hi_value error_value]<cr>	Set new analog output limits and error output value. • **lo_value** = Low limit of the channel. • **hi_value** = High limit of the channel. • **error_value** = Error value of the channel.

Syntax	Description

Example (show current configuration):
`pass 1300`
`amode 1`
`Aout 1 range (mA)  :4.00 ... 20.00 (error :21.00)`
Example (set channel to 4 ... 20 mA, and error level to 3.6 mA):
`pass 1300`
`amode 1 4 20 3.6`
`Aout 1 range (mA)  :4.00 ... 20.00 (error :3.60)`	

Table 37 AOVER command

Syntax	Description
AOVER [channel]<cr>	Show the behavior of the analog output when the measured value is outside the scaled output range. `channel` = Analog output channel, only 1 can be selected.
AOVER [channel clip% valid%]<cr>	Set the behavior of the analog output when the measured value is outside the scaled output range. • `clip%` = Output margin (%) at which the output is clipped. • `valid%` = Output margin (%) at which the output of the channel goes into the error state. The error state is defined using the **AMODE** command.

Syntax	Description

For example, first check the analog output settings using **ASEL**, **AMODE**, and **AOVER** commands:
`pass 1300`
`asel 1`
`Aout 1 quantity : CO2(0 ... 50000)`
 	
`amode 1`
`Aout 1 range (mA) :0.00 ... 20.00 (error : 23)`
 	
`aover 1`
`Aout 1 clipping :10.00 %`
`Aout 1 error limit :10.00 %`
 	
Now give the following **AOVER** command:
`aover 1 5 10`
`Aout 1 clipping : 5.00 %`
`Aout 1 error limit :10.00 %`
 	
The analog output now behaves like this:
• Clipping is now set to 5 %, meaning the output is allowed to vary between 0 ... 21 mA. The analog channel will output the measurement for 0 ... 52500 ppm, but range 0 ... 20 mA remains scaled to 0 ... 50000 ppm.
• Error limit is 10 %, which means the output will show the error state (23 mA) when the measured value is 10 % outside the scaled output range. With the settings above, this will happen if the measured CO_2 concentration is outside range 0 ... 55000 ppm.
• The output will never actually be between 21 mA and 23 mA because of clipping.	

Table 38 ATEST command

Syntax	Description
ATEST [channel] [level]<cr>	Test the operation of the analog output by forcing the output to a given value. • `channel` = Analog output channel, only 1 can be selected. • `level` = Level for analog output channel in mA. You can then measure the output with a calibrated multimeter. After testing the output, use the **ATEST** command again to exit the test mode.

Syntax	Description

Example (enable analog output test mode, set level to 20 mA):
`pass 1300`
`atest 1 20`
`Aout 1 (mA)  :20.000`	

Example (disabling analog output test mode, resuming normal output):
`atest 1`
`Aout 1 test mode disabled.`	

4.12 Other commands

Table 39 PASS command

Syntax	Description
PASS [code]<cr>	Access advanced serial commands. You can use advanced commands until the next reset. [code] = Code for enabling advanced commands (1300).
Example: `pass 1300`	

Table 40 OPEN command

Syntax	Description
OPEN [address]<cr>	Connect to a probe that is in POLL mode. address = Probe address, range 0 ... 254.

Example (target probe in POLL mode, with address 52):
`open 52`
`GMP231:  52 Opened for operator commands`	

Table 41 CLOSE command

Syntax	Description
CLOSE<cr>	Close the connection to a probe.

Syntax	Description

Example (target probe in POLL mode, with address 52):
Example:
`close`
`line closed`	

Table 42 ERRS command

Syntax	Description
ERRS<cr>	Show active errors. The possible errors and their identifying numbers correspond to content of the status word of the I^2C interface.

Example (showing normal status, no active errors):
`errs`
`NO CRITICAL ERRORS`
`NO ERRORS`
`NO WARNINGS`
`STATUS NORMAL`
Example (showing probe in standby mode, no active errors):
`errs`
`NO CRITICAL ERRORS`
`NO ERRORS`
`NO WARNINGS`
`STATUS 25 : Device in standby mode (set by user)`	

Table 43 RESET command

Syntax	Description
RESET<cr>	Reset the probe. The probe restarts as if it had just been powered on.

Example:
`reset`
`GMP231 1.0.0`	

Table 44 FRESTORE command

Syntax	Description
FRESTORE<cr>	Restore the probe to its factory configuration. All user settings are lost. After using the **FRESTORE** command, reset the probe using the **RESET** command.

Example:

```
pass 1300
frestore
Parameters restored to factory defaults
reset
GMP231 - Version 1.1.0
Vaisala Oyj 2012 - 2014
```

5. I2C interface

5.1 Overview of I²C interface

GMP231 has an inter-integrated circuit (I²C) interface for interfacing with the incubator's control computer. GMP231 implements I²C slave functionality, with the incubator's computer acting as the master. The interface can be used to read measurement values and status information, set operation parameters, and make adjustments.

5.1.1 Physical interface

The physical interface is a non-isolated 3-wire interface. Wires are SDA, SCL and ground. SDA and SCL lines are buffered. Ground is shared with power supply. There are small pull-up resistors for SCL and SDA. Connector is 8 pin male M12. Maximum cable length should not exceed 5 m and maximum capacitance between communication lines and ground should not exceed 500 pF.

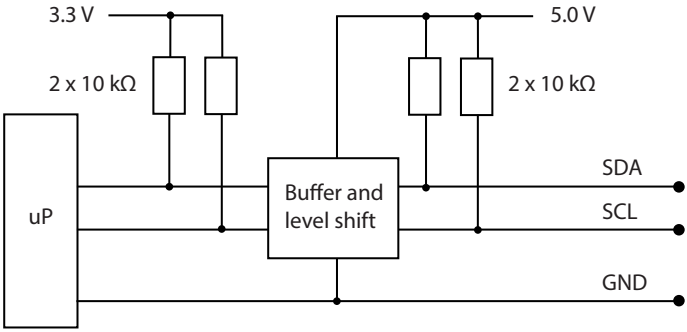

Figure 12 Hardware schematic

More information

- Wiring (page 25)

5.1.2 Communication parameters

GMP231 supports maximum 50 kHz clock speed. Protocol bits are sent most significant bit (MSB) first. Parameter bytes are sent using little endian order.

5.1.3 Addressing

GMP231 uses 7-bit addressing. The address consists of:

- 4-bit device type identifier part (default "0001" for GMP231)

- 3-bit sub address (default “001”)

The full 7-bit default address is “0001001” (09_{hex}). In I^2C communication, the address should be provided by the master in the standard way after the I^2C start condition, with the read/write bit as the least significant bit (LSB).

Table 45 GMP231 I^2C Address

0	0	0	1	0	0	1	R/W
Device type				Sub-address			Read/write bit (LSB)

The I^2C implementation of the GMP231 also includes the address inside the message frame. The purpose of this is to make the I^2C implementation easier, since the I^2C address can be lost by the I^2C hardware. This address is provided without the read/write bit, with zero as the MSB.

Table 46 GMP231 Device Address

0	0	0	0	1	0	0	1
MSB	Device type				Sub-address		

Make sure that there are no addressing conflicts if other I^2C devices are put on the same bus. The GMP231 address can be changed.

More information

- Register table (page 67)

5.1.4 Timing

The minimum time delay that the master must wait between the invoke and response messages depends on the operation. If the operation includes a write to the non-volatile memory, it takes more time than other operations.

Table 47 Timing

Operation	Minimum Delay
Normal delay between invoke and response	10 ms
Delay when write to non-volatile memory	300 ms

5.1.5 Status byte

The status byte gives the master device information about the slave device's state, and information about the communication status with the ACK/NACK bit.

The status byte has bits for signaling Status, Warning, Error and Critical error statuses. These bits are cleared when the status word is read. Bits are set when the corresponding status or error state changes in the slave device.

Table 48 Status Byte

Bit#	Description
0	ACK/NACK
1	Critical error
2	Error
3	Warning
4	Status
5	
6	
7	

5.1.6 Checksum

GMP231 uses a CRC16-CCITT checksum in its protocol frame. CCITT (x.25) polynomial is $X^{16}+X^{12}+X^{5}+1 = 11021_{hex}$. Initial value is $FFFF_{hex}$ and the final value is XORed with $FFFF_{hex}$. The checksum uses a bit reversed algorithm.

When the invoke message is received, the checksum is calculated using bytes from the command byte to the last byte of the data field. The checksum needs to be valid before data can be accepted. If the checksum is not valid, the message is rejected and the internal state of the GMP231 is set to Idle.

When the response message is transmitted, the checksum is calculated using bytes from the status byte to the last byte of the data field.

5.1.7 Status word

The status word is used to monitor the status of the GMP231 device. It can be read in the same way as any other slave parameter. The status word is used as a 32-bit long bit field, where each bit represents a state of some error or other essential status. The status word is sent least significant bit (LSB) first.

The status word content is updated every two seconds. Changes in the status word bits can be monitored by reading the status byte.

Table 49 (page 56) lists the content of the status word. The status bits are categorized according to the severity of the status:

- **Critical errors** are fatal to the operation of the unit. It may not be able to respond to communication at all, and does not measure correctly.
- **Errors** prevent CO_2 measurement and cause the analog outputs to be set to the error state. Depending on the problem, errors may resolve themselves. For example, sensor heating eventually dries out condensation on the optical surfaces.
- **Warnings** do not prevent normal operation but may indicate possible problems.
- **Status** indicates a known state of the unit, such as the CO_2 measurement standby mode.

There are several possible internal error statuses that you cannot do much about. After using the instructions in the following table and in Problem situations (page 84), try to power cycle the probe and see if the error stays on.
If your unit has persistent errors that you cannot resolve yourself, contact Vaisala.

Table 49 Status word content

Bit#	Type	Meaning	Recommended action
0	Critical Error	Program memory corrupted (CRC error).	Fatal error, contact Vaisala.
1	Critical Error	Parameter memory corrupted (CRC error).	Fatal error, contact Vaisala.
2	Reserved		
3	Reserved		
4	Error	Low supply voltage error.	Check supply voltage.
5	Error	Low internal 30 V voltage.	
6	Error	Low input signal. Can be caused by dirt or condensation on the optical surfaces.	Wait to see if condensation is removed by heat. For cleaning instructions, see Cleaning (page 72).
7	Error	Low internal 8 V voltage.	
8	Error	Signal dynamic range too high.	
9	Error	Pressure sensor communication.	
10	Error	Pressure sensor out of range.	
11	Error	Sensor temperature too high for operation.	Wait for sensor to cool down.
12	Error	CO_2 concentration too high to measure.	Wait for CO_2 concentration to fall into the measurable range.
13	Error	Sensor heater resistance out of range.	
14	Error	IR source temperature error too high.	

Bit#	Type	Meaning	Recommended action
15	Reserved		
16	Error	Internal 2.5 V voltage out of range.	
17	Error	Internal 1.7 V voltage out of range.	
18	Error	Low IR current.	
19	Reserved		
20	Warning	Low input signal. Can be caused by dirt or condensation on the optical surfaces.	Continue normally.
21	Reserved		
22	Warning	Noisy signal.	Continue normally.
23	Warning	Transmitter reset by watchdog process.	Continue normally.
24	Status	CO_2 measurement in standby mode: set automatically due to high temperature.	Wait for sensor to cool down.
25	Status	CO_2 measurement in standby mode: set by user command.	Set to normal mode when desired.
26	Status	CO_2 adjustment state on.	Complete the CO_2 adjustment.
27	Reserved		
28	Reserved		
29	Reserved		
30	Reserved		
31	Reserved		

More information

- Status byte (page 55)

5.2 Commands

5.2.1 Get_Interface_Version

Get_Interface_Version command (ID 80_{hex}) reads the interface version information. This command is recommended for verifying version compatibility before reading or writing parameters.

Table 50 Get_Interface_Version invoke message

Message segment	Length	Content
I^2C address	1 byte	I^2C address (write)
Command ID	1 byte	Always 80_{hex}
Device address	1 byte	See Table 46 (page 54).
Frame length	1 byte	Always 05_{hex}
Checksum	2 bytes	See Checksum (page 55).

Table 51 Get_Interface_Version response message

Message segment	Length	Content
I^2C address	1 byte	I^2C address (read)
Status	1 byte	See Status byte (page 55).
Command ID	1 byte	Always 80_{hex}
Device address	1 byte	See Table 46 (page 54).
Frame length	1 byte	Always $0A_{hex}$
Data	1 byte	Device version
	1 byte	Protocol frame version
	1 byte	Command set version
	1 byte	Parameter set version
Checksum	2 bytes	See Checksum (page 55).

5.2.2 Get_Parameter

Get_Parameter command (ID 81_{hex}) reads parameter values. You can use it to read both measurement results and operational parameters. If the master tries to read more bytes than message size, the slave sends FF_{hex} bytes.

Table 52 Get_Parameter invoke message

Message segment	Length	Content
I^2C address	1 byte	I^2C address (write)
Command ID	1 byte	Always 81_{hex}
Device address	1 byte	See Table 46 (page 54).
Frame length	1 byte	Always 06_{hex}

Message segment	Length	Content
Data	1 byte	ID of parameter to be read
Checksum	2 bytes	See Checksum (page 55).

Table 53 Get_Parameter response message

Message segment	Length	Content
I^2C address	1 byte	I^2C address (read)
Status	1 byte	See Status byte (page 55). If requested parameter ID was unknown, NACK bit is set in the status byte.
Command ID	1 byte	Always 81_{hex}
Device address	1 byte	See Table 46 (page 54).
Frame length	1 byte	Varies according to data length, 07_{hex} ... 39_{hex}.
Data	1 byte	ID of parameter
	1 ... 50 bytes	Value of parameter. If requested parameter ID is unknown, these data bytes are left out of the response.
Checksum	2 bytes	See Checksum (page 55).

5.2.2.1 Example: Read CO_2 measurement

Table 54 Read CO_2 measurement sequence example

Message bytes (hex)	Sent by	Content
	Master	I^2C start condition
12		I^2C address (write)
81		Get_parameter command
09		Device address
06		Frame length
0A		CO_2 parameter ID
AA		CRC high
9F		CRC lo
		I^2C repeated start condition
13		I^2C address (read)

Message bytes (hex)	Sent by	Content
00	GMP231	Status byte (no errors, ACK)
81		Get_parameter command
09		Device address
0B		Frame length
0A		CO_2 Parameter ID
69		CO_2 value 653.6314 ppm
68		
23		
44		
75		CRC high
7D		CRC lo
	Master	I^2C end condition

5.2.3 Set_Parameter

Set_Parameter command (ID 82_{hex}) writes parameter values to non-volatile memory. You can use it to set the operational parameters of the GMP231. Depending on the change, the functionality of the GMP231 may not change immediately.

The length of the invoke message varies depending on the data length. The master must write as many bytes as indicated in the frame length of the invoke message. If the master tries to write a longer or shorter message, GMP231 rejects the message.

Table 55 Set_Parameter invoke message

Message segment	Length	Content
I^2C address	1 byte	I^2C address (write)
Command ID	1 byte	Always 82_{hex}
Device address	1 byte	See Table 46 (page 54).
Frame length	1 byte	Varies according to data length, 07_{hex} ... 38_{hex}.
Data	1 byte	Parameter ID
	1 ... 50 bytes	Parameter value
Checksum	2 bytes	See Checksum (page 55).

Table 56 Set_Parameter response message

Message segment	Length	Content
I^2C address	1 byte	I^2C address (read)
Status	1 byte	See Status byte (page 55).
Command ID	1 byte	Always 82_{hex}
Device address	1 byte	See Table 46 (page 54).
Frame length	1 byte	Always 08_{hex}.
Data	1 byte	Parameter ID
	1 byte	Return code. See the following table.
Checksum	2 bytes	See Checksum (page 55)

Table 57 Set_Parameter return codes

Code	Meaning
0	Ok
1	Unknown parameter ID
2	Not writeable parameter
3	Value field too long
4	Value field too short
5	Data value not accepted
6	Incorrect message length

5.2.3.1 Example: Set compensation temperature

Table 58 Set compensation temperature sequence example

Message Bytes (hex)	Sent by	Content
	Master	I^2C start condition
12		I^2C address (write)
82		Set_parameter command
09		Device address
0A		Frame length
10		Parameter ID of compensation temperature
00		Temperature 37 °C
00		
14		
42		
0C		CRC high
6E		CRC lo
		I^2C repeated start condition
13		I^2C address (read)
04	GMP231	Status byte (error active, ACK)
82		Set_parameter command
09		Device address
08		Frame length
10		Parameter ID of compensation temperature
00		Return code: Ok
D1		CRC high
CE		CRC lo
	Master	I^2C end condition

5.2.4 Get_Parameter_Info

Get_Parameter_Info command (ID 83_{hex}) reads the properties of a single parameter from the GMP231. The command is useful for adapting to parameters that have been added in a new software version. If the requested parameter ID is not valid, data type **Unknown Parameter ID** is returned.

Table 59 Get_Parameter_Info invoke message

Message segment	Length	Content
I^2C address	1 byte	I^2C address (write)
Command ID	1 byte	Always 83_{hex}
Device address	1 byte	See Table 46 (page 54).
Frame length	1 byte	Always 06_{hex}.
Data	1 byte	Parameter ID
Checksum	2 bytes	See Checksum (page 55).

Table 60 Get_Parameter_Info response message

Message segment	Length	Content
I^2C address	1 byte	I^2C address (read)
Status	1 byte	See Status byte (page 55).
Command ID	1 byte	Always 83_{hex}
Device address	1 byte	See Table 46 (page 54).
Frame length	1 byte	
Data	1 byte	Parameter ID
	1 byte	Parameter datatype. See the following table.
	1 byte	Parameter length in bytes.
	1 byte	Parameter persistence. Describes if the parameter value is volatile (lost at reset) or non-volatile (survives reset). See Table 62 (page 64).
	≥8 bytes	Parameter name. If name is shorter than 8 bytes, extra bytes are filled with 00_{hex}.
Checksum	2 bytes	See Checksum (page 55).

Table 61 Parameter data types

Code	Meaning
0	Unknown parameter ID
1	Byte
2	Integer (16-bit)
3	Unsigned integer (16–bit)

Code	Meaning
4	Float (32-bit)
5	String

Table 62 Parameter persistence

Code	Meaning
0	Void
1	Volatile
2	Non volatile

5.2.5 Adjust

Adjust command (ID 84_{hex}) controls the user adjustment sequence of CO_2 measurement.

Table 63 Adjust invoke message

Message segment	Length	Content
I^2C address	1 byte	I^2C address (write)
Command ID	1 byte	Always 84_{hex}
Device address	1 byte	See Table 46 (page 54).
Frame length	1 byte	Varies according to data length, 07_{hex} ... $0B_{hex}$.
Data	1 byte	Adjustment subcommand. See Table 65 (page 65).
	1 byte	Parameter to be adjusted. See Table 66 (page 65).
	4 bytes	Value of parameter. Used only with subcommands 2 and 3.
Checksum	2 bytes	See Checksum (page 55).

Table 64 Adjust response message

Message Segment	Length	Content
I^2C address	1 byte	I^2C address (read)
Status	1 byte	See Status byte (page 55).
Command ID	1 byte	Always 84_{hex}
Device address	1 byte	See Table 46 (page 54).

Message Segment	Length	Content
Frame length	1 byte	Always 07_{hex}.
Data	1 byte	Return code. See Table 67 (page 65).
Checksum	2 bytes	See Checksum (page 55).

Table 65 Adjustment subcommands

Code	Adjustment operation
0	Start 1 point adjustment
1	Start 2 point adjustment
2	Record measured point 1, reference value is given in parameter
3	Record measured point 2, reference value is given in parameter
4	Cancel adjustment (previous adjustment is reverted)
5	End (adjustment is saved and new values are taken in use)
6	Revert to factory calibration (clear user adjustment)

Table 66 Adjustment parameters

Code	Purpose
0	All parameters (valid with revert to factory calibration)
1	CO_2

Table 67 Adjustment return codes

Code	Meaning
0	OK
1	Function not supported
2	Sequence error
3	Recorded-Reference difference too large
4	2-point adjustment: Points too close
5	Given reference value is invalid

5.3 Adjusting measurement

Before implementing an adjustment sequence using the **Adjust** command, read the general instructions for calibration and adjustment.

Create the reference environment inside the chamber, and use the **Adjust** command to perform the adjustment sequence.

Adjustment can fail for a number of reasons. For a list of return codes for the **Adjust** command, see Table 67 (page 65).

More information

- Calibration and adjustment (page 74)

5.3.1 1-point adjustment

To perform a 1-point adjustment of carbon dioxide (CO_2), measurement using I^2C protocol, you must perform the following sequence:

1. Using the **Adjust** command, start 1-point adjustment for the chosen parameter.
2. Place the sensor in the reference environment and wait until the measurement has stabilized.
3. Using the **Adjust** command, record the measured point and give the reference value.
4. Use the **Adjust** command to end the adjustment.

5.3.2 2-point adjustment

To perform a 2-point adjustment of CO_2 measurement using I^2C protocol, you must perform the following sequence:

1. Using the **Adjust** command, start 2-point adjustment for CO_2.
2. Supply the low concentration CO_2 reference gas to the sensor and wait for three minutes until the measurement has stabilized.
3. Using the **Adjust** command, record the first measured point and give the first reference value.
4. Supply the high concentration CO_2 reference gas to the sensor and wait for three minutes until the measurement has stabilized.
5. Using the **Adjust** command, record the second measured point and give the second reference value.
6. Use the **Adjust** command to end the adjustment.

5.4 Data registers

The register table describes all available parameters and their properties. The properties are: parameter meaning, ID, name, data type, length and persistence. Persistence defines if the parameter is saved in EEPROM (non-volatile memory) or in RAM. Make sure not to write excessively to the EEPROM, as it has a maximum lifetime of approximately 30000 cycles.

5.4.1 Data formats

Table 68 Data formats

Data type name	Size in bytes	Other
Byte	1	Value range 0 ... 255
Integer	2	Value range -32768 ... 32767.
Unsigned integer	2	Value range 0 ... 65535
Long integer	4	Value range −2,147,483,648 ... 2,147,483,647
Unsigned long integer	4	Value range 0 ... 4,294,967,295
Float	4	According to IEEE-754. Nan ($7FC00000_{hex}$) is returned if no value is available.
String	Max. 50	All characters accepted (00_{hex} ... FF_{hex})

Maximum string size refers to maximum communication buffer size. For the actual reserved storage space for each parameter, see Register table (page 67).

Integers and floating point numbers are sent LSB first.

5.4.2 Register table

Table 69 GMP231 register table

Meaning	Name	ID	Size in bytes	Type	Read/ write	Persistent	Other
Factory information							
Device address	ADDR	0	1	Byte	R	Yes	Default is 09_{hex}.
Device serial number	SNUM	1	12	Str	R	Yes	Example: A1234567

Meaning	Name	ID	Size in bytes	Type	Read/ write	Persistent	Other
Sensor number	SSNUM	2	12	Str	R	Yes	Example: B1234567
Component board number	CBNUM	3	12	Str	R	Yes	Example: C1234567
Software version number	VERS	4	12	Str	R	Yes	Example: 1.2.3.4567
Factory adjustment date Year	ADATEY	5	2	Uint	R	Yes	Example: 2014
Factory adjustment date Month	ADATEM	6	1	Byte	R	Yes	Example: 3
Factory adjustment date Day	ADATED	7	1	Byte	R	Yes	Example: 29
General parameters and variables							
Device status word	STATUS	8	4	Str	R	No	See Status word (page 55).
CO_2 measurement mode	CO2_MODE	9	1	Byte	R/W	Yes	0 = Standby mode. Measurement and probe heating is off 1 = Measurement on Internal logic can override this setting.
Final CO_2 result	CO2	10	4	Float	R	No	ppm CO_2
Raw CO_2 (uncompensated, unfiltered)	CO2_RAW	11	4	Float	R	No	ppm CO_2
Compensated CO_2 (unfiltered)	CO2_COMP	12	4	Float	R	No	ppm CO_2
CO_2 measurement filtering	CO2_FILT	13	1	Byte	R/W	Yes	Range 0 ... 1 0 = no filtering 1 = filtering (default)

Meaning	Name	ID	Size in bytes	Type	Read/ write	Persistent	Other
Sensor heating	HEAT	14	1	Byte	R/W	Yes	Range 0...1 0 = no heating 1 = heating (default)
Compensation settings							
Temperature compensation mode	TC_MODE	15	1	Byte	R/W	Yes	0 = Compensation off 1 = Use temperature setpoint value (default) 2 = Use Internal sensor temperature
Compensation temperature	T_COMP	16	4	Float	R/W	No	Celsius
Measured temperature (internal sensor)	T	17	4	Float	R	No	Celsius
Pressure compensation mode	PC_MODE	18	1	Byte	R/W	Yes	0 = Compensation off 1 = Use pressure setpoint value 2 = Use internal pressure sensor (default)
Compensation pressure	P_COMP	19	4	Float	R/W	No	hPa
Measured pressure (internal sensor)	P	20	4	Float	R	No	hPa
Humidity compensation mode	RHC_MODE	21	1	Byte	R/W	Yes	0 = Compensation off 1 = Use RH setpoint value (default)
Compensation humidity	RH_COMP	22	4	Float	R/W	No	%RH

Meaning	Name	ID	Size in bytes	Type	Read/ write	Persistent	Other
Oxygen compensation mode	O2C_MODE	23	1	Byte	R/W	Yes	0 = Compensation off 1 = Use oxygen concentration setpoint value (default)
Compensation oxygen	O2_COMP	24	4	Float	R/W	No	$\%O_2$
Adjustment settings							
Reference CO_2 point 1	CO2_RP1	25	4	Float	R/W	Yes	ppm CO_2
Measured CO_2 point 1	CO2_MP1	26	4	Float	R	Yes	ppm CO_2
Reference CO_2 point 2	CO2_RP2	27	4	Float	R/W	Yes	ppm CO_2
Measured CO_2 point 2	CO2_MP2	28	4	Float	R	Yes	ppm CO_2
Reference temperature point 1	T_RP1	29	4	Float	R/W	Yes	Celsius 0 °C
Measured temperature point 1	T_MP1	30	4	Float	R	Yes	Celsius 0 °C
Reference pressure point 1	PRE_RP1	31	4	Float	R/W	Yes	1013.25 hPa
Measured pressure point 1	PRE_MP1	32	4	Float	R	Yes	1013.25 hPa
Analog output settings							
Analog output mode	A_MODE	33	1	Byte	R/W	No	0 = Off (0 mA) 1 = Test mode 2 = Normal (default) 3 = Locked to latest value
Analog output test current	A_TC	34	4	Float	R/W	No	0 ... 25 mA

Meaning	Name	ID	Size in bytes	Type	Read/ write	Persistent	Other
Analog output error state current	A_EC	35	4	Float	R/W	Yes	0 ... 25 mA
Analog output low end current	A_LC	36	1	Byte	R/W	Yes	0 = 0 mA 1 = 4 mA
Analog output scale low (0/4 mA)	A_LOW	37	4	Float	R/W	Yes	ppm CO_2
Analog output scale high (20 mA)	A_HI	38	4	Float	R/W	Yes	ppm CO_2
Other							
Persistent compensation values (used if volatile values are not given)							
Compensation temperature	T_COMP2	39	4	Float	R/W	Yes	37 °C (default)
Compensation pressure	P_COMP2	40	4	Float	R/W	Yes	1013.25 hPa (default)
Compensation humidity	RH_COMP2	41	4	Float	R/W	Yes	90 %RH (default)
Compensation oxygen	O2_COMP2	42	4	Float	R/W	Yes	19.7 %O_2 (default)

6. Maintenance

6.1 Cleaning

When correctly installed, the GMP231 is minimally exposed to contaminants in the chamber. There is little reason to perform cleaning other than normal chamber sterilization, and changing the filter and/or silicone plug if they appear contaminated.

The CARBOCAP® sensor of the GMP231 is well protected by the PTFE filter, and it can tolerate some dirt on the optics as the measurement is compensated for the reduction of signal.

CAUTION! When changing the filter, you can use clean instrument air to gently blow any loose dirt and filter material away from the sensor. Do not attempt to clean the optical surfaces of the sensor in any other manner.

More information

- Changing the filter (page 72)
- Changing the silicone plug (page 73)

6.1.1 Chemical tolerance

GMP231 tolerates the following sterilization chemicals:

- DMSO
- IPA (70 % Isopropyl Alcohol, 30 % water)
- H_2O_2 (2000 ppm), non-condensing
- Ethanol
- Acetic acid

CAUTION! The electronics housing of the GMP231 is not sealed, so do not expose it to these chemicals. If necessary, you can clean the housing by wiping with a moist cloth.

6.2 Changing the filter

Change the filter to a new one if it shows visible signs of contamination.

1. Pull the white PTFE filter away from the sensor. Rotating the filter slightly makes it easier to detach.
2. Use clean instrument air to gently blow any loose dirt and filter material away from the sensor.

3. Take a new clean filter and push it onto the sensor. If you are using the Vaisala silicone plug for sealing, push and rotate the filter slightly to make sure the filter reaches below the edge of the plug.

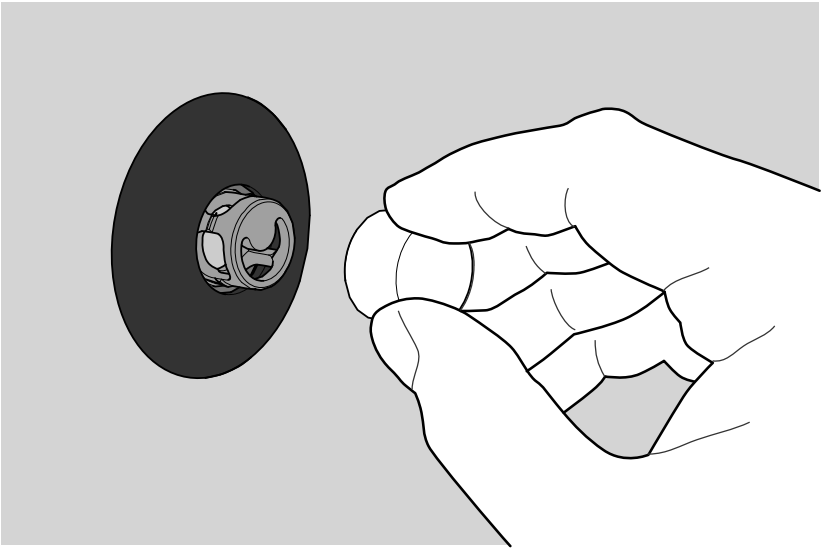

Figure 13 Changing the filter

6.3 Changing the silicone plug

Change the silicone plug if it shows visible signs of contamination. It is best to replace the filter also.

1. Pull the white PTFE filter away from the sensor. Rotating the filter slightly makes it easier to detach
2. Lift one edge of the plug and pull it away from the installation tube.
3. Use clean instrument air to gently blow any loose dirt and filter material away from the sensor.
4. Clean the installation tube and the wall around the plug.
5. Place the new silicone plug over the sensor and push it into the installation tube.

6. Take a new clean filter and push it onto the sensor. Push and rotate the filter slightly to make sure it is fully in place.

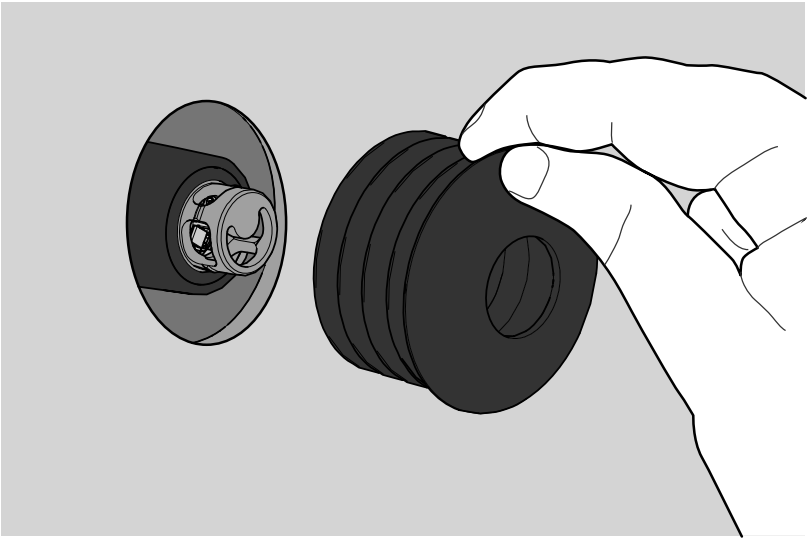

Figure 14 Changing the silicone plug

6.4 Calibration and adjustment

Calibrate and adjust the CO_2 measurement of GMP231 as needed. Before starting, read through this section completely so that you are aware of your options, and the main factors that affect the result.

Performing an accurate calibration and adjustment takes some time and preparation. Instead of doing it yourself, contact Vaisala.

Calibration means comparing GMP231 to a known reference, such as calibration gas or a reference instrument. Correcting the reading of the GMP231 so that is measures accurately is referred to as **adjustment**.

6.4.1 Calibration setup

GMP231 is designed to be calibrated while it remains installed through an incubator wall. If you calibrate the GMP231 without it being installed, note the following:

- If you are using a calibration gas, prevent it from entering the electronics housing of the GMP231. Otherwise it diffuses through the probe to the sensor and alter the CO_2 reading.
- Make sure that the PTFE filter is in place when performing calibration.
- If you are using the calibration adapter accessory to feed the calibration gas to the sensor, note that you must have the silicone plug and the PTFE filter installed on the probe. Without both of them in place, the calibration adapter does not function properly. Vaisala recommends replacing the silicone plug and the PTFE filter before calibration.

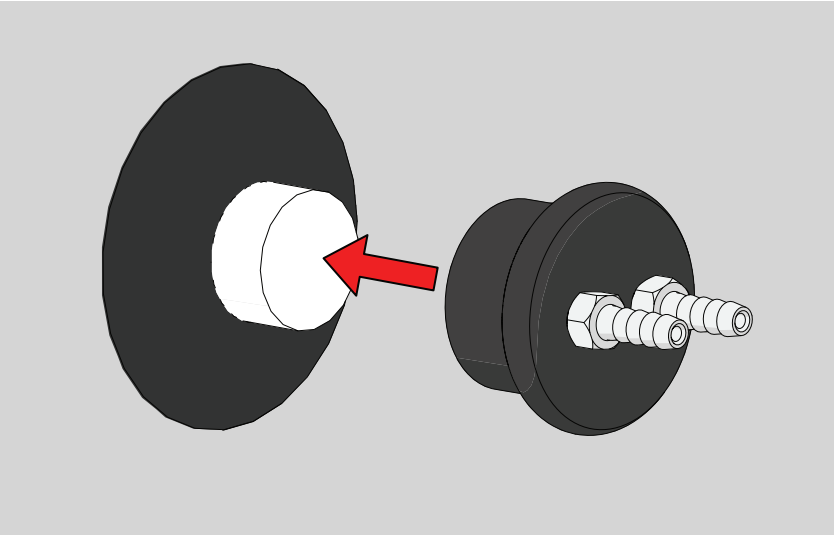

Figure 15 Inserting the calibration adapter over the filter

6.4.1.1 Using ambient air as reference

You can use ambient air to do a 1-point calibration with the background CO_2 level as your reference. You need a calibrated reference instrument to compare against, for example a GM70 hand-held meter with a calibrated GMP222 probe.

With the GMP231 and the reference instrument in the same space (for example, inside the incubator with the door open), allow the measurement to stabilize before comparing the readings. Try to provide as stable environment as you can during this time. Avoid working around the incubator during this time.

6.4.1.2 Using a calibration gas as reference

There are 2 easy ways to use a calibration gas as a reference:

- You can supply the gas to the GMP231 using the calibration adapter accessory. Gas flow should be in the range 0.5 ... 1.1 l/min, recommendation is 1 l/min. Allow the measurement to stabilize for three minutes before starting the calibration.
- You can fill the entire incubator with the calibration gas.

To perform a 2-point adjustment, you need 2 calibration gases: one that is below 2 %CO_2 (low-end reference) and one that is above 2 %CO_2 (high-end reference).

When supplying the gas from a gas bottle, make sure the gas bottle has stabilized to room temperature before starting.

6.4.2 Effect of environmental compensations

GMP231 has various environmental compensations that improve its CO_2 measurement accuracy. As the calibration and adjustment environment may differ from the actual measurement environment, you must make sure that the compensation settings are properly set. Here are some key points to remember:

- Pressure and temperature compensations have a significant effect on accuracy. If you are using setpoint values instead of the values from built-in pressure and temperature sensors, make sure to correct the setpoints so that they corresponds to your calibration situation. Consider switching the compensations to use the internal sensors when calibrating, and then switching back when calibration and adjustment is done.
- The effect of background gas compensations for humidity and oxygen may be significant when using calibration gases, since they are often dry and oxygen-free. For example, pure nitrogen gas is typically used as a convenient 0 ppm CO_2 reference.
- Remember to restore the normal compensation settings after completing calibration and adjustment. If you are integrating the calibration functionality of the GMP231 as part of the incubator's control software, also implement proper handling of the environmental compensations.

More information

‣ Environmental compensation (page 16)

6.4.3 Limits of adjustment

GMP231 limits the amount of adjustment that is allowed to the CO_2 measurement. The maximum correction that you can apply is **1000 ppm + 25 %** of the probe's uncorrected reading. Previous user adjustments do not affect this limit (correction is not cumulative). This feature limits the possible error introduced by incorrect adjustment.

For example, if you are adjusting using a 5 %CO_2 calibration gas (50000 ppm), the maximum correction you can apply is approximately 13500 ppm. Attempting to apply a greater adjustment fails. Notification of failure from the GMP231 depends on the interface you are using for adjustment.

6.4.4 Adjustment types

You can adjust the CO_2 measurement of GMP231 in 1 or 2 points.

- 1-point adjustment is recommended if you are interested in maintaining a fixed CO_2 level inside the chamber. For best result, use a calibration gas with a CO_2 concentration that is close to the intended level.
- 2-point adjustment is recommended if you typically measure a variable CO_2 level.

Available adjustment functions depend on the interface you use to operate the GMP231. If you want to integrate the functionality into the incubator's control system, the I^2C interface and the Vaisala Industrial Protocol are recommended. If you want to compare the reading of the GMP231 to a reference instrument as adjust it accordingly, use an MI70 handheld indicator and a reference probe.

6.4.4.1 I^2C Interface

I^2C interface supports 1 and 2-point adjustment sequences as well as configuration of the environmental compensation settings using the Get_Parameter and Set_Parameter commands.

More information

- Get_Parameter (page 58)
- Set_Parameter (page 60)
- Adjust (page 64)

6.4.4.2 Vaisala Industrial Protocol

Vaisala industrial protocol supports one and two-point adjustment with the **CC02** command. You can also adjust the internal pressure and temperature measurements with a simple offset correction. Configuration of the environmental compensation settings can be done using serial line commands.

More information

- Changing measurement settings (page 38)
- Calibration commands (page 43)

6.4.4.3 MI70 handheld indicator

MI70 handheld indicator supports 1-point adjustment, either using a calibration gas or using a reference instrument that is connected to the MI70.

More information

- Calibration and adjustment with MI70 indicator (page 80)

7. Operating with MI70 indicator

7.1 Overview of MI70 support

GMP231 is compatible with instruments that utilize the MI70 indicator, for example the GM70 Handheld Carbon Dioxide Meter. The MI70 indicator is a convenient service tool for viewing the measurement readings, adjusting the environmental compensation settings, and performing calibration and one-point adjustment.

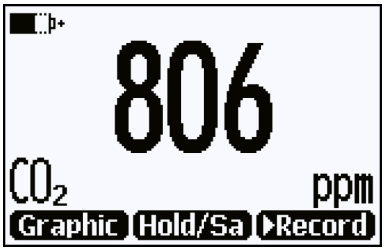

Figure 16 CO_2 reading on MI70 screen

7.2 Connecting GMP231 to MI70 Indicator

1. If GMP231 is installed in an incubator, disconnect the incubator's cable from the 8-pin M12 connector. Note that GMP231 can remain physically connected to the incubator.
2. If the MI70 indicator is on, turn it off.
3. Connect GMP231 to the MI70 indicator using the GMP231 service cable for MI70.
4. Turn on the MI70 indicator. MI70 detects the probe and proceeds to show the measurement screen. The parameters measured by GMP231 start to show valid measurement results after a few seconds.

More information

- Spare parts and accessories (page 88)

7.3 Changing environmental compensation settings with MI70 indicator

You can see the compensation values that are currently used by GMP231 by selecting them as display quantities from **Main menu > Display > Quantities and Units**. The quantities are as follows:

- **Tcomp**: currently active temperature compensation value.
- **Pcomp**: currently active pressure compensation value.

- **Ocomp**: currently active oxygen concentration compensation value.
- **Hcomp**: currently active relative humidity compensation value.

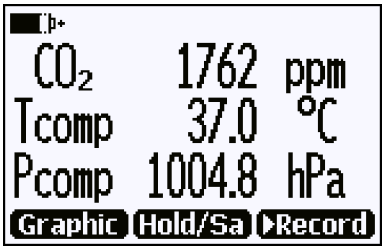

Figure 17 CO2 reading with Tcomp and Pcomp on MI70 screen

You can change the compensation settings from **Main menu > Settings > Measurement settings**.

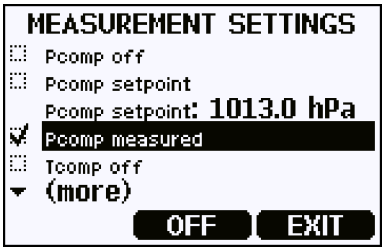

Figure 18 GMP231 compensation settings on MI70 screen

When you turn a compensation off, GMP231 still shows a value for the corresponding display quantity (for example, **Pcomp** shows 1013.2 hPa). This is the default compensation value that is mathematically neutral for the probe's internal compensation model.

More information

- Environmental compensation (page 16)

7.4 Calibration and adjustment with MI70 indicator

Before using the MI70 indicator for calibration and adjustment, see Calibration and adjustment (page 74).
Make sure that the environmental compensation settings of the GMP231 are properly set for your calibration environment.

When 2 probes are connected to the MI70 indicator, it uses Roman numerals “I” and “II” to indicate which port the parameter or function in question is connected to.

More information

- Changing environmental compensation settings with MI70 indicator (page 78)

7.4.1 1-point adjustment with an MI70-compatible reference probe

1. Connect the GMP231 to Port I of the MI70 indicator.
2. Connect the calibrated reference probe to Port II. Make sure the reference probe is in the same environment as the GMP231’s sensor.
3. If you are using the calibration adapter to feed a calibration gas to the GMP231, you must feed the same gas to the reference probe also. Refer to the documentation of your reference probe on how to do this, and what accessories you need.
4. Turn on the MI70 indicator.
5. Start the adjustment sequence from **Main menu > Functions > Adjustments**.

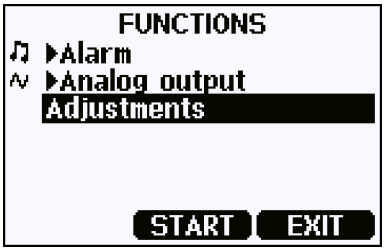

6. MI70 notifies you that automatic power off is disabled during adjustment mode, press **OK** to acknowledge.

7. To proceed with the adjustment, select the **CO2(I)** parameter in the **Select Quantity** screen. In the **Select Quantity** screen you can also view the currently used compensation values, and the **Last adjustment date** information. You can update the date and text using the **CDATE** and **CTEXT** commands on the serial line.
8. You may be prompted to check the environmental settings of the reference probe before proceeding. Press **Yes** to check the settings and **Exit** when you have checked and corrected the settings.
9. The adjustment mode is now active, and you can see the measured CO_2 readings and their difference on the screen. Allow the measurement to stabilize. To proceed with the adjustment, press **Adjust**.

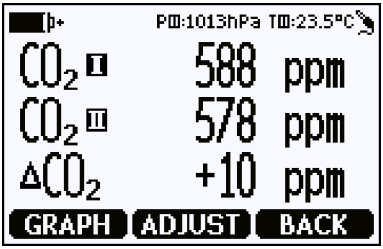

10. Select **To same as CO^2(II)**.

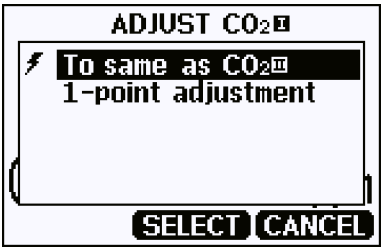

11. You are prompted if you really want to adjust. Select **Yes**.
12. If the adjustment is successful MI70 shows the text **Adjustment Done**, after which you return to the adjustment mode. At this point you can press **Back** and **Exit** to leave the adjustment mode. The adjustment is now completed. If the adjustment cannot be applied MI70 shows the text **Cannot adjust**, possibly followed by a text stating the reason. A possible reason for an adjustment failure is attempting to apply a very large correction to the reading.

More information

- Limits of adjustment (page 76)

7.4.2 1-point adjustment with a reference gas

1. Connect GMP231 to Port I of the MI70 indicator.
2. Feed a calibration gas to GMP231 using the calibration adapter accessory. If you are using ambient air as the calibration gas, you must have a reference meter in the same environment to verify the CO_2 concentration.
3. Turn on the MI70 indicator.
4. Start the adjustment sequence from **Main menu > Functions > Adjustments**.

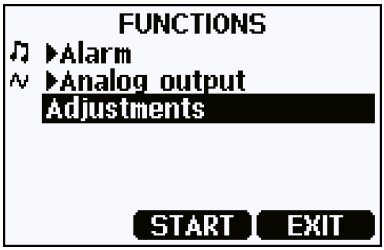

5. MI70 notifies you that automatic power off is disabled during adjustment mode, press **OK** to acknowledge.
6. Select the CO_2 parameter when prompted.
7. You may be prompted to check the environmental settings of the reference probe before proceeding. Press **Yes** to check the settings and **Exit** when you have checked and corrected the settings.
8. The adjustment mode is now active, and you can see the measured CO_2 reading on the screen. To proceed with the adjustment, press **Adjust**.

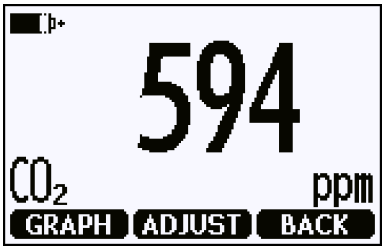

9. Select **1-point adjustment**.

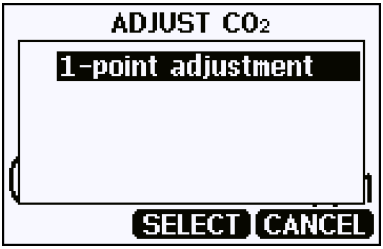

10. You are prompted if you really want to adjust. Select **Yes**.
11. You are now in the 1-point adjustment screen. Allow the measurement to stabilize and press **Ready**.
12. Enter the CO_2 concentration of the reference gas and press **OK**.

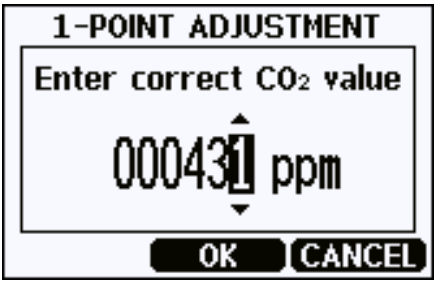

13. You are prompted if you really want to adjust. Select **Yes**.
14. If the adjustment is successful MI70 shows the text **Adjustment Done**, after which you return to the adjustment mode. At this point you can press **Back** and **Exit** to leave the adjustment mode. The adjustment is now completed. If the adjustment cannot be applied MI70 shows the text **Cannot adjust**, possibly followed by a text stating the reason. A possible reason for an adjustment failure is attempting to apply a very large correction to the reading.

More information

- Limits of adjustment (page 76)

8. Troubleshooting

8.1 Problem situations

Table 70 Possible problem situations and their remedies

Problem	Possible cause	Remedy
Analog output reading is unchanging and appears incorrect.	Analog output is in error state.	Remove the cause of the error state and the analog output recovers its normal function.
Probe outputs stars "****" on serial line instead of measurement data.	Incorrect supply voltage.	Check the power supply. Check the active errors using the **ERRS** command on the serial line.
	Unsuitable operating environment.	Verify that the operating environment is within specified operating limits.
Unable to access probe on RS-485 line.	Incorrect wiring.	Check that the RS-485 connection is wired correctly.
		Power cycle or reset the probe and try again.
	Probe in POLL mode with unknown address.	Issue the **??** command to make the probe output its information. Then use the **OPEN** command to open a line to the probe's address.
CO_2 measurement not working.	Condensation on the sensor.	Remove the PTFE filter and check if condensation has formed on the sensor. If yes, dry out the condensation with instrument air and insert a new dry filter. Keep the probe powered and operating to prevent re-occurrence.

More information

- Wiring (page 25)
- Analog output error state (page 84)

8.2 Analog output error state

GMP231 sets the analog output channel into a defined error level instead of the measured result in 2 situations:

- Probe detects a measurement malfunction. This means an actual measurement problem, such as sensor damage or unsuitable environmental conditions.
- Measured value(s) are well outside the scaled output range.

The default error level depends on the output type:

- For 4 ... 20 mA output, the default error level is **3.6 mA**.
- For 0 ... 20 mA output, the default error level is **23 mA**.

The probe resumes normal operation of the analog output when the cause of the error state is removed.

More information

‣ Analog output overrange behavior (page 18)

9. Technical data

9.1 GMP231 specifications

Table 71 Measurement performance

Property	Description/Value
Measurement range	0 ... 20 %CO_2
Calibration uncertainty at 5 %CO_2	±0.1 %CO_2
Start-up time	< 20 s
Warm-up time for full spec.	< 3 min
Response time	
T63	< 30 s
T90	< 50 s
Accuracy at 37 °C, 1013 hPa	
Repeatability at:	
0 ... 8 %CO_2	±0.1 %CO_2
8 ... 12 %CO_2	±0.2 %CO_2
12 ... 20 %CO_2	±0.4 %CO_2
Non-linearity at 0 ... 20 %CO_2	±0.1 %CO_2
Temperature dependence	
With compensation at 3 ... 12 %CO_2, 20 ... 60 °C	±0.1 %CO_2
Without compensation (typical)	-0.4 % of reading/°C
Pressure dependence	
With compensation at 3 ... 12 %CO_2, 700 ... 1100 hPa	±0.015 % of reading/hPa
Without compensation (typical)	+0.15 % of reading/hPa
Humidity dependence	
With compensation at 0 ... 20 %CO_2, 0 ... 100 %RH	±0.9 % of reading (at 37 °C)
Without compensation (typical)	+0.05 % of reading/%RH
O_2 dependence	
With compensation at 0 ... 20 %CO_2, 0 ... 90 %O_2	±0.6 % of reading

Property	Description/Value
Without compensation (typical)	-0.08 % of reading/%O_2
Long-term stability	
0 ... 8 %CO_2	< ±0.2 %CO_2/year
8 % ... 12 %CO_2	< ±0.5 %CO_2/year
12 % ... 20 %CO_2	< ±1.0 %CO_2/year

Table 72 Operating environment

Property	Description/Value
Operating temperature for CO_2 measurement	0 ... +70 °C (+32 ... +158 °F)
Max. temperature durability in standby mode (sensor head only)	Max. +195 °C (+383 °F)
Heat sterilization 180 °C durability	At least 120 cycles
Storage temperature	-40 ... +75 °C (-40 ... +167 °F)
Pressure (compensated)	500 ... 1100 hPa
Pressure (operating)	< 1500 hPa
Humidity	0 ... 100 %, non-condensing
Condensation prevention	Sensor head heating when power on
Chemical tolerance	DMSO, IPA (70 %), H_2O_2 (2000 ppm, non-condensing), ethanol, acetic acid
Electromagnetic compatibility	EN61326-1, Generic Environment

Table 73 Inputs and outputs

Property	Description/Value
Digital outputs	I^2C 5 V, RS-485 (2-wire with Vaisala Industrial Protocol)
Analog output	0 ... 20 mA (scalable) max. load 600 Ω
Power consumption	< 1 W (pulsed)
Operating voltage	11 ... 30 VDC 20 ... 30 VDC (with analog output)

Table 74 Mechanical specifications

Property	Description/Value
Connector	M12/8 pin
Weight	150 g (5.29 oz) without cable 200 g (7.05 oz) with cable
IP rating	IP54 (sensor head) IP20 (electronics housing)
Materials	
Housing	Metal coated plastic ABS+PC
Inner tube	Aluminum
Probe tube	PPSU
Filter	PTFE
Dimensions	
Probe tube max. diameter	30.2 mm (1.19 in)
Probe tube min. diameter	24.8 mm (0.98 in)
Probe tube length	118.5 mm (4.67 in)
Sensor filter diameter	19 mm (0.75 in)
Sensor filter length	12 mm (0.47 in)

9.2 Spare parts and accessories

Table 75 Spare parts and accessories for GMP231

Description	Item code
M12 connection cable 0.9 m with open ends	DRW240977SP
M12 connection cable 0.9 m with open ends	ASM210903SP
Service cable for MI70	221801
USB PC connection cable	221040
PTFE filter	DRW240494SP
Silicone plug	DRW240015SP
Attachment bracket	DRW240247SP
Calibration adapter for GMP231	239523

Online store

Accessories, spare parts, and calibration and repair products are available online at store.vaisala.com.

Warranty

For standard warranty terms and conditions, see vaisala.com/warranty.
Please observe that any such warranty may not be valid in case of damage due to normal wear and tear, exceptional operating conditions, negligent handling or installation, or unauthorized modifications. Please see the applicable supply contract or Conditions of Sale for details of the warranty for each product.

Technical support

Contact Vaisala technical support at helpdesk@vaisala.com. Provide at least the following supporting information as applicable:

- Product name, model, and serial number
- Software/Firmware version
- Name and location of the installation site
- Name and contact information of a technical person who can provide further information on the problem

For more information, see vaisala.com/support.

Recycling

Recycle all applicable material according to local regulations.

VAISALA

www.vaisala.com

AKRIBIS · www.akribis.info · contacto@akribis.info