USER GUIDE

GMD110

Vaisala · Authorized Partner

Distributed by AKRIBIS

M212885EN-B

User Guide

Duct Carbon Dioxide Transmitter

GMD110

VAISALA

AKRIBIS · www.akribis.info · contacto@akribis.info

PUBLISHED BY

Vaisala Oyj
Vanha Nurmijärventie 21, FI-01670 Vantaa, Finland
P.O. Box 26, FI-00421 Helsinki, Finland
+358 9 8949 1
www.vaisala.com
docs.vaisala.com

© Vaisala 2023

No part of this document may be reproduced, published or publicly displayed in any form or by any means, electronic or mechanical (including photocopying), nor may its contents be modified, translated, adapted, sold or disclosed to a third party without prior written permission of the copyright holder. Translated documents and translated portions of multilingual documents are based on the original English versions. In ambiguous cases, the English versions are applicable, not the translations.

The contents of this document are subject to change without prior notice.

Local rules and regulations may vary and they shall take precedence over the information contained in this document. Vaisala makes no representations on this document's compliance with the local rules and regulations applicable at any given time, and hereby disclaims any and all responsibilities related thereto.

This document does not create any legally binding obligations for Vaisala towards customers or end users. All legally binding obligations and agreements are included exclusively in the applicable supply contract or the General Conditions of Sale and General Conditions of Service of Vaisala.

This product contains software developed by Vaisala or third parties. Use of the software is governed by license terms and conditions included in the applicable supply contract or, in the absence of separate license terms and conditions, by the General License Conditions of Vaisala Group.

Table of contents

1. About this document ... 7
1.1 Version information ... 7
1.2 Related manuals ... 7
1.3 Documentation conventions ... 8
1.4 Trademarks ... 8

2. Product overview ... 9
2.1 Introduction to GMD110 Duct Carbon Dioxide Transmitter ... 9
2.1.1 GMD110 basic features ... 9
2.2 GMD110 transmitter parts ... 10
2.3 Analog output overrange behavior ... 11
2.4 Safety ... 12
2.4.1 ESD protection ... 12

3. Installation ... 13
3.1 Duct mounting overview ... 13
3.2 Installing into duct ... 13
3.2.1 243261SP mounting flange ... 16
3.3 Wiring ... 16
3.3.1 RS-485 termination and biasing ... 18

4. Using transmitter with Insight PC software ... 20
4.1 Vaisala Insight PC software ... 20
4.2 Connecting to Insight PC software ... 20
4.3 Insight main view ... 22
4.4 Configuring analog outputs with Insight ... 23
4.5 CO2 adjustment in Insight ... 23
4.6 Setting filtering factor with Insight ... 25

5. Using transmitter with Indigo80 handheld indicator ... 26
5.1 Indigo80 handheld indicator ... 26
5.1.1 Indigo80 keypad ... 26
5.1.2 Indigo80 main menu ... 26
5.2 Connecting to Indigo80 handheld indicator ... 27
5.3 Configuring transmitter features with Indigo80 handheld indicator ... 29
5.4 CO2 adjustment with Indigo80 ... 30

6. Using transmitter with MI70 handheld indicator ... 31
6.1 Overview of MI70 support ... 31
6.2 Connecting to MI70 handheld indicator ... 31
6.3 Basic display ... 32
6.4 Graphical display ... 32
6.5 Main menu ... 32
6.6 Holding and saving the display ... 33
6.7 Recording data ... 34

7. Maintenance 35
7.1 Cleaning 35
7.2 Changing the filter 35
7.3 Calibration and adjustment 36
7.3.1 Calibration setup 36
7.3.2 Limits of adjustment 37
7.3.3 DRW244827SP calibration adapter 37

8. Troubleshooting 38
8.1 Problem situations 38
8.2 Error messages 39
8.3 Analog output error state 40

9. Technical data 42
9.1 GMD110 specifications 42
9.2 Accessories and spare parts 45
9.3 243261SP mounting flange dimensions 46

Appendix A: Modbus reference 47
A.1 Default communication settings 47
A.2 Function codes 47
A.3 Data encoding 47
A.3.1 32-bit floating point or 32-bit integer format 47
A.3.2 16-bit integer format 48
A.4 Modbus registers 48
A.4.1 Measurement data registers 49
A.4.2 Configuration registers 49
A.4.3 Status registers 50
A.5 Device identification objects 50
A.6 Exception responses 51
A.7 Filtering factor 51

Maintenance and calibration services 53

Technical support 53

Warranty 53

Recycling 53

List of figures

Figure 1 GMD110 transmitter parts....10
Figure 2 GMD110 transmitter base parts....11
Figure 3 Duct mounting overview....13
Figure 4 GMD110 with 243261SP mounting flange....16
Figure 5 Current output wiring....17
Figure 6 Voltage output wiring....17
Figure 7 RS-485 wiring....18
Figure 8 Termination and bias resistors on the RS-485 bus....19
Figure 9 Connecting GMD110 transmitter to Insight PC software....21
Figure 10 Insight main menu and settings....22
Figure 11 Analog output configuration options in Insight....23
Figure 12 Insight calibration view....24
Figure 13 Filtering factor configuration view....25
Figure 14 Indigo80 handheld indicator....26
Figure 15 Indigo80 keypad....26
Figure 16 Indigo80 main menu....27
Figure 17 Connecting GMD110 transmitter to Indigo80 handheld indicator....28
Figure 18 MI70 basic display....32
Figure 19 Opening the filter....35
Figure 20 DRW244827SP calibration adapter....37
Figure 21 GMD110 dimensions....45
Figure 22 243261SP mounting flange dimensions....46
Figure 23 243261SP mounting flange dimensions, cross section....46

List of tables

Table 1 Document versions (English) 7
Table 2 Related manuals 7
Table 3 Analog output overrange clipping and error limits 12
Table 4 GMD110 error messages 39
Table 5 GMD110 measurement performance 42
Table 6 GMD110 operating environment 43
Table 7 GMD110 inputs and outputs 43
Table 8 GMD110 compliance 44
Table 9 GMD110 mechanical specifications 44
Table 10 GMD110 accessories and spare parts 45
Table 11 Default Modbus serial communication settings 47
Table 12 Modbus function codes 47
Table 13 Interpretation of 16-bit signed integer values 48
Table 14 Modbus measurement data registers (read-only) 49
Table 15 Modbus configuration data registers (writable) 49
Table 16 Modbus status registers (read-only) 50
Table 17 Device identification objects 50
Table 18 Modbus exception responses 51

1. About this document

1.1 Version information

This document provides detailed instructions for installing, using, and maintaining Vaisala GMD110 Duct Carbon Dioxide Transmitter.

Table 1 Document versions (English)

Document code	Date	Description
M212885EN-B	September 2023	This document. Updated sections: • Safety (page 12) Added sections: • Analog output overrange behavior (page 11) • Configuring transmitter features with Indigo80 handheld indicator (page 29) • CO2 adjustment with Indigo80 (page 30) • Overview of MI70 support (page 31) • Connecting to MI70 handheld indicator (page 31) • Basic display (page 32) • Graphical display (page 32) • Main menu (page 32) • Holding and saving the display (page 33) • Recording data (page 34)
M212885EN-A	May 2023	First version.

1.2 Related manuals

For the latest versions of these documents, see docs.vaisala.com.

Table 2 Related manuals

Document code	Name
M010139EN	Vaisala GM70 Carbon Dioxide Meter User Guide
M212722EN	Vaisala Indigo80 Handheld Indicator User Guide

1.3 Documentation conventions

WARNING! Warning alerts you to a serious hazard. If you do not read and follow instructions carefully at this point, there is a risk of injury or even death.

CAUTION! Caution warns you of a potential hazard. If you do not read and follow instructions carefully at this point, the product could be damaged or important data could be lost.

Note highlights important information on using the product.

Tip gives information for using the product more efficiently.

Lists tools needed to perform the task.

Indicates that you need to take some notes during the task.

1.4 Trademarks

Vaisala® and CARBOCAP® are registered trademarks of Vaisala Oyj.

Windows® is either a registered trademark or trademark of Microsoft Corporation in the United States and other countries.

All other product or company names that may be mentioned in this publication are trade names, trademarks, or registered trademarks of their respective owners.

2. Product overview

2.1 Introduction to GMD110 Duct Carbon Dioxide Transmitter

GMD110 is a high-accuracy duct transmitter for measuring carbon dioxide in air-handling systems and ventilation ducts. The transmitter is equipped with the renowned CARBOCAP® sensor that has unique accuracy and measurement stability, which supports precise and reliable controls of HVAC systems even in demanding conditions and sites.

The transmitter belongs to Vaisala HMDW110 Transmitter Series, which include transmitters for duct mounting, IP65-rated wall transmitters, immersion temperature transmitters and outdoor transmitters with integrated radiation shields.

2.1.1 GMD110 basic features

- Designed for highly reliable CO_2 measurement in air ducts
- Vaisala CARBOCAP® sensor
- ± 40 ppm CO_2 accuracy
- Excellent long-term stability
- Analog and Modbus RTU output options
- IP65-rated housing
- Traceable calibration (certificate included)

2.2 GMD110 transmitter parts

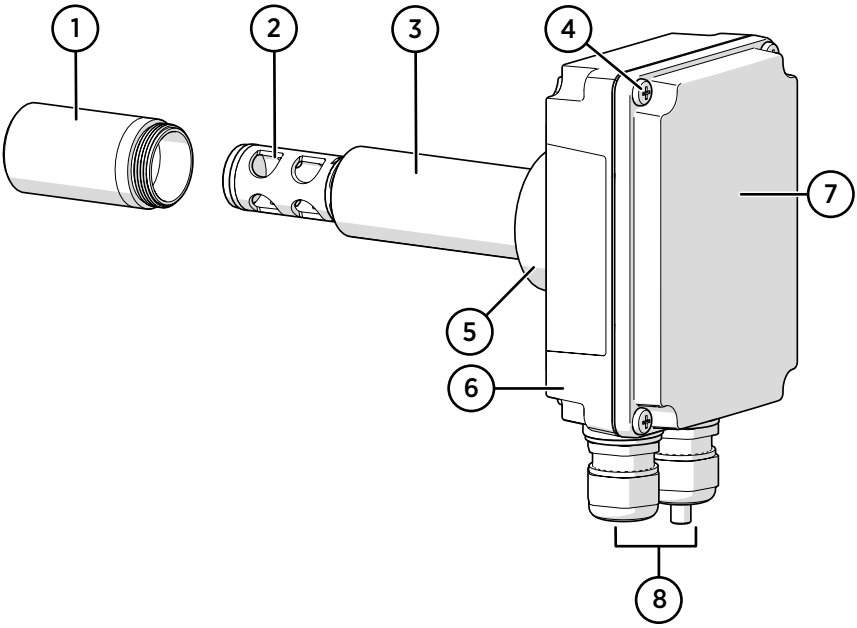

Figure 1 GMD110 transmitter parts

1 Filter (sintered, PTFE)
2 Measurement cuvette with optics and CARBOCAP® CO_2 sensor
3 Probe body
4 Screws (4 pcs) for opening the transmitter cover
5 Duct gasket
6 Transmitter base
7 Transmitter cover
8 Cable glands with sealing tab (M16×1.5 lead-through, cable diameter 4 ... 8 mm (0.16 ... 0.31 in))

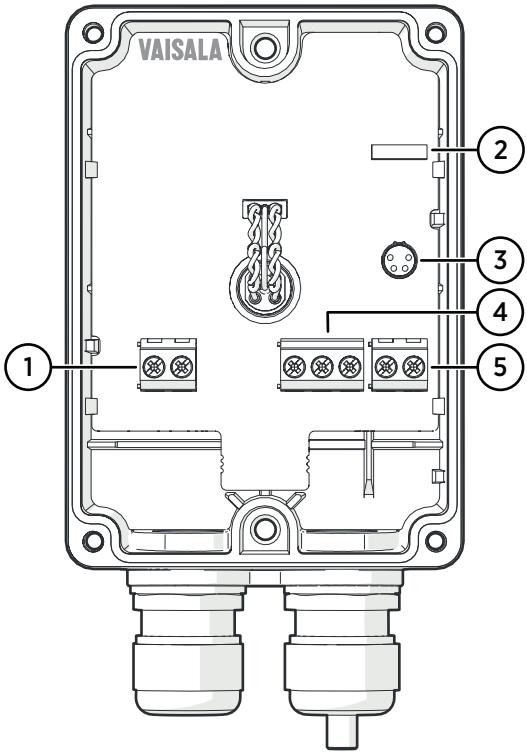

Figure 2 GMD110 transmitter base parts

1 Screw terminals for 24 V DC power supply input
2 Output mode switch
3 Service port (M8 4-pin A-coded male)
4 Screw terminals for analog output
5 Screw terminals for digital output

2.3 Analog output overrange behavior

The analog output has a defined behavior when the measurement is outside the scaled analog output range. At first, the output is clipped when the measurement exceeds a set limit (the measurement continues, but the output does not change from the clipped value).

When the measurement exceeds the second limit (error limit), the analog output switches to the error state defined for the output.

The table below lists the clipping and error limits and default error state outputs for the analog voltage and current outputs.

Table 3 Analog output overrange clipping and error limits

Output voltage / current	Clipping limit	Error limit	Default error state output
0 ... 5 V	>5 %	>10 %	0 V
0 ... 10 V	>1 %	>10 %	0 V
0 ... 20 mA	>5 %	>10 %	23 mA
4 ... 20 mA	>5 %	>10 %	2 mA

The same clipping and error limits are applied when the measured value drops back to the scaled range: at first the output returns to the clipped value from the error state, and then to normal output.

Clipping and error state limits differ for 0 ... 10 V and 0 ... 5 V outputs. For 0 ... 10 V output the limits are 1 % and 10 %, and for 0 ... 5 V output the limits are 5 % and 10 %.

2.4 Safety

This product has been tested for safety. Note the following precautions:

CAUTION! Do not modify the unit or use it in ways not described in the documentation. Improper modification or use may lead to safety hazards, equipment damage, failure to perform according to specification, decreased equipment lifetime, or the warranty becoming void.

CAUTION! The service port connection is only intended for temporary use during configuration, and must not be used for permanent installations.

2.4.1 ESD protection

Electrostatic discharge (ESD) can damage electronic circuits. Vaisala products are adequately protected against ESD for their intended use. However, it is possible to damage the product by delivering electrostatic discharges when touching, removing, or inserting any objects in the equipment housing.

To avoid delivering high static voltages to the product, avoid touching exposed component contacts during installation and maintenance.

3. Installation

3.1 Duct mounting overview

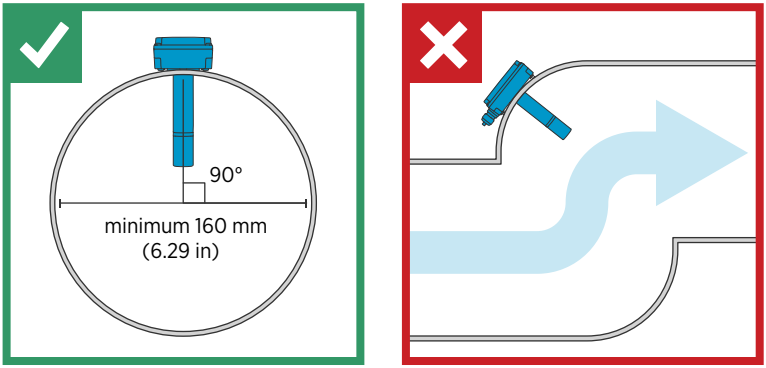

Figure 3 Duct mounting overview

1. Check that the duct diameter is suitable for the probe body. The minimum diameter of the duct is 160 mm (6.29 in). Ideally, the sensor should be installed in the middle of the duct.
2. Install the probe in a 90° angle so that the sensor is placed as close to the middle of the duct as possible.
3. Avoid installing the transmitter in dead legs.

3.2 Installing into duct

- Crosshead screwdriver with long PZ2 bit
- Drill with 26 ... 28 mm (1.02 ... 1.10 in) drill bit
- Screws (2 pcs), provided
- Small slotted screwdriver
- Tools for cutting and stripping wires

It is recommended to attach the transmitter to the duct without predrilling holes for the screws. If you wish to drill holes in advance, use a maximum 2 mm (0.08 in) drill bit.

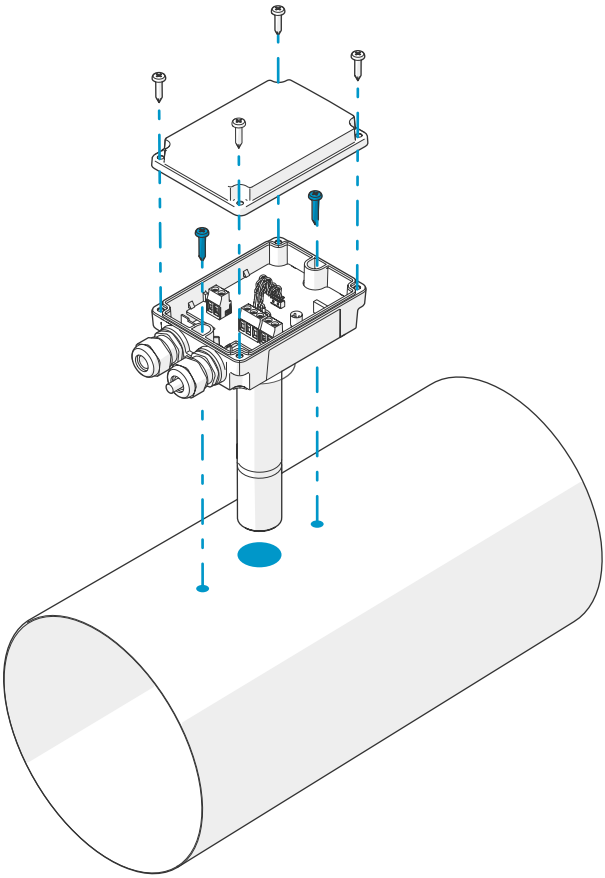

1. Open the 4 screws on the transmitter cover and remove the cover.
2. Attach the input/output wiring to the screw terminals on the transmitter component board. Tighten cable glands firmly after wiring.
3. Select an installation location for the transmitter on the duct surface and drill a 26 ... 28 mm (1.02 ... 1.10 in) hole for inserting the probe.

4. Push the probe through the hole on the duct until the duct gasket meets the duct.

> Check that the duct gasket sits tightly over the installation hole. If the duct has a negative pressure, external air can be drawn into the duct and affect the measurement if the installation hole is not sealed tightly.

5. Attach the transmitter body to the duct with 2 screws.
6. Close the transmitter cover.

More information

- Wiring (page 16)

3.2.1 243261SP mounting flange

The optional flange accessory can be used to install the probe through a surface.

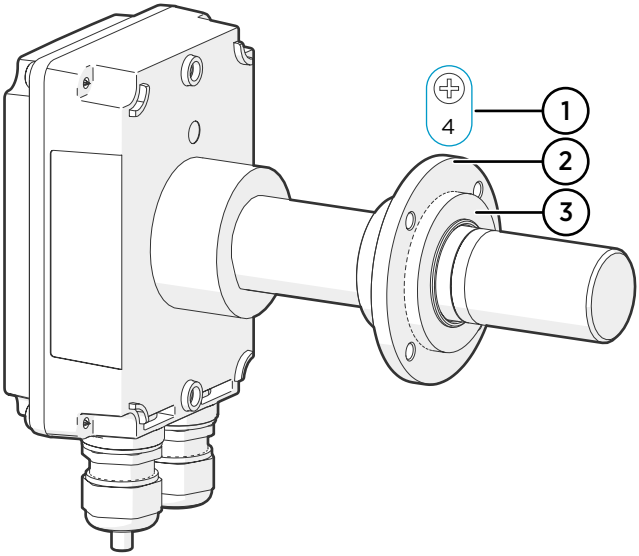

Figure 4 GMD110 with 243261SP mounting flange

1 4 Phillips head screws (included)
2 Mounting flange (diameter 60 mm (2.36 in)) with four Ø 4.2 mm (Ø 0.17 in) screw holes
3 Gasket ring

3.3 Wiring

Wiring with analog output

The output mode switch must be set to **Analog** to enable the analog outputs.

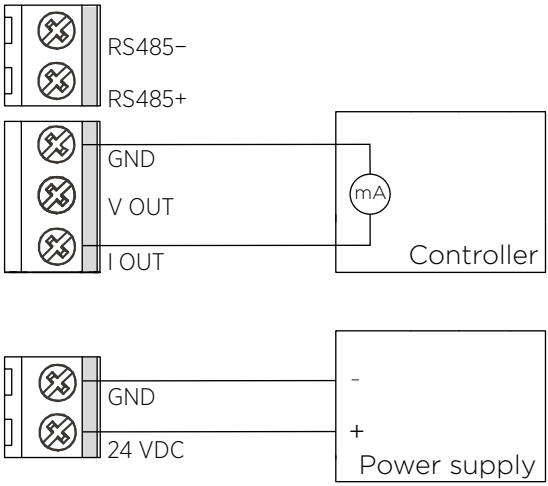

Figure 5 Current output wiring

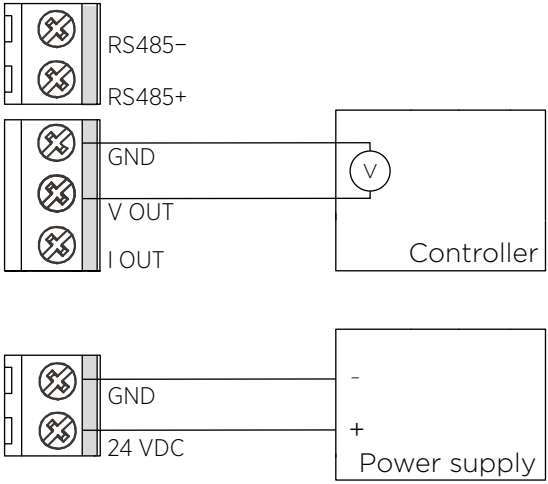

Figure 6 Voltage output wiring

Wiring with digital output

- The output mode switch must be set to **Digital** to enable the RS-485 connection.
- Use twisted pair cabling for the RS-485 connection so that positive and negative signals are in a pair.

- To ensure reliable data transmission and attain the rated EMC performance of the device, you must install the appropriate termination and bias resistors on the RS-485 line.

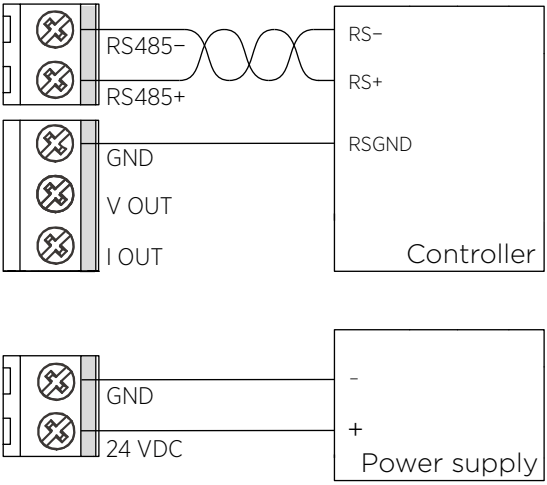

Figure 7 RS-485 wiring

More information

- RS-485 termination and biasing (page 18)

3.3.1 RS-485 termination and biasing

When using the RS-485 output of the GMD110, you must install the appropriate termination and bias resistors on the RS-485 bus to ensure reliable data transmission and attain the rated EMC performance of the device. On a bus that connects multiple transmitters with separate "stub" connections, it also helps keep the individual stubs as short as possible.

Requirements for termination and biasing depend on various variables, for example, number of devices on the bus, cabling specification and length, and data rate used. Therefore, specific bus implementation must always be considered when implementing the network.

The recommended way of implementing termination and biasing is using a simple resistor network as shown in Figure 8 (page 19). Note that GMD110 does not have integrated termination or bias resistors.

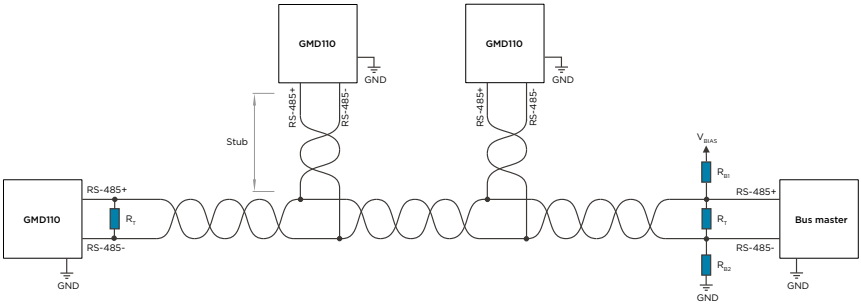

Figure 8 Termination and bias resistors on the RS-485 bus

R_T Termination resistor
R_{B1} Bias resistor for connecting the RS-485+ line to a 5 V power supply
R_{B2} Bias resistor for connecting the RS-485- line to ground
V_{BIAS} 5 V power supply

Termination

When a signal is transmitted over a communication bus, it can bounce back and forth between the ends of the line, creating multiple reflections that interfere with the original signal. You can prevent this by adding a termination resistor to absorb the reflected signal.

Termination resistor values should be selected to match the characteristic impedance of the cable used (typically 120 Ω for a twisted pair). It is recommended to add a termination resistor at both ends of the bus.

Biasing

Biasing refers to the process of maintaining a constant voltage level on the communication line to ensure that the line is in a known state when no data is being transmitted. This is important because without a known state, the receiving device may not be able to distinguish between a valid data signal and noise.

Biasing resistor values shall be selected so that voltages on RS-485 signals shall never exceed +12 V or −7 V, and differential voltage can be driven to ±200 mV by all devices on the network. Example values for termination and biasing network as shown in Figure 8 (page 19) are: 120 Ω for R_T, 750 Ω for R_{B1} and R_{B2} with a V_{BIAS} of 5 V.

Only one pair of biasing resistors is needed for a bus.

4. Using transmitter with Insight PC software

4.1 Vaisala Insight PC software

Vaisala Insight PC software is a configuration software for Indigo-compatible probes and other supported devices. Insight is available for Microsoft Windows® operating systems (64-bit only).

With the Insight software, you can:

- See device information and status.
- See real-time measurement data.
- Calibrate and adjust the device.

Download Insight at www.vaisala.com/insight.

4.2 Connecting to Insight PC software

- Computer with a Microsoft Windows® operating system (64-bit version) and Vaisala Insight PC software installed
- Crosshead screwdriver
- Vaisala Indigo USB adapter (Vaisala item code USB2) and M12 - M8 service cable (Vaisala item code 262195)
- Vaisala USB Device driver installed

CAUTION! The service port connection is only intended for temporary use during configuration, and must not be used for permanent installations.

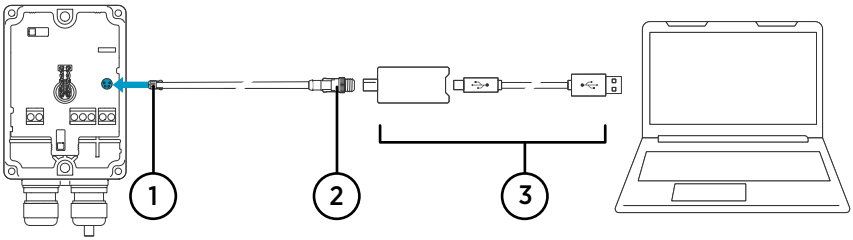

Figure 9 Connecting GMD110 transmitter to Insight PC software

1 M8 connector of the service cable
2 M12 connector of the service cable
3 USB adapter

1. Open the 4 screws on the transmitter cover and remove the cover.
2. Change the position of the output mode switch to digital mode.
3. Connect the M8 connector of the service cable to the service port.
4. Connect the USB adapter to the M12 connector of the M12 - M8 service cable (262195).
5. Connect the USB adapter to a free USB port on the PC.
6. Open the Insight software on your PC.
7. Wait for the Insight software to detect the transmitter.

4.3 Insight main view

Figure 10 Insight main menu and settings

1 Select ⚙ to access Insight main menu.
   - **Configure device**: communication settings, analog output settings, Modbus configuration and filtering factor.
   - **Export settings**: creates a text file export of the device settings.
   - **Calibrate**: options for calibrating and adjusting carbon dioxide output, viewing adjustment data, and restoring factory adjustments.
   - **Communication**: contains a quick access selection for restarting the device.
   - **About device**: general device information such as serial number and software version.
2 Select **Settings** to switch between the **Basic mode** and **Advanced mode** user modes, change the units of parameters (metric/non-metric), enter a factory code to access restricted functionalities, or view information about the Insight software.
3 **Monitoring** provides options for monitoring and recording selected parameters, and exporting the monitoring data as a CSV (comma-separated values) file.
4 Device information menu with the following tabs:
   - **Measurements**: measurement graph view with parameter drop-down selection.
   - **Calibration information**: read-only information about the latest stored calibration.
   - **Diagnostics**: troubleshooting and administrative information about the device status.

4.4 Configuring analog outputs with Insight

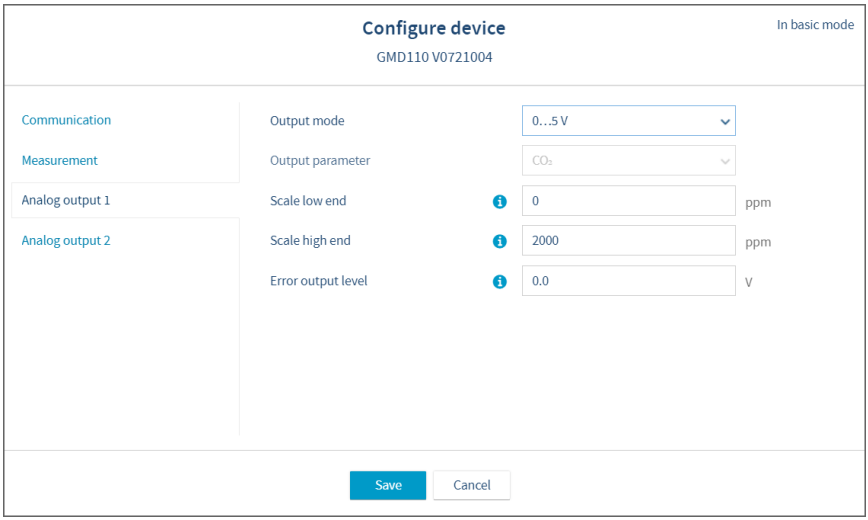

Figure 11 Analog output configuration options in Insight

1. Connect the transmitter to Insight. See Connecting to Insight PC software (page 20).
2. Select ⚙ **> Configure device**.
3. Select **Analog output 1** or **Analog output 2** depending on which output you want to configure.
   - To configure voltage output, select **Analog output 1**.
   - To configure current output, select **Analog output 2**.
4. In **Output mode** select the output mode.
5. In **Scale low end** and **Scale high end**, enter the low and high end values for the output scale.
6. In **Error output level**, set the error output value.
7. Select **Save** to store the configuration and exit the menu with **Cancel** when done.

4.5 CO2 adjustment in Insight

Prepare a calibration gas for the desired reference CO_2 concentration.

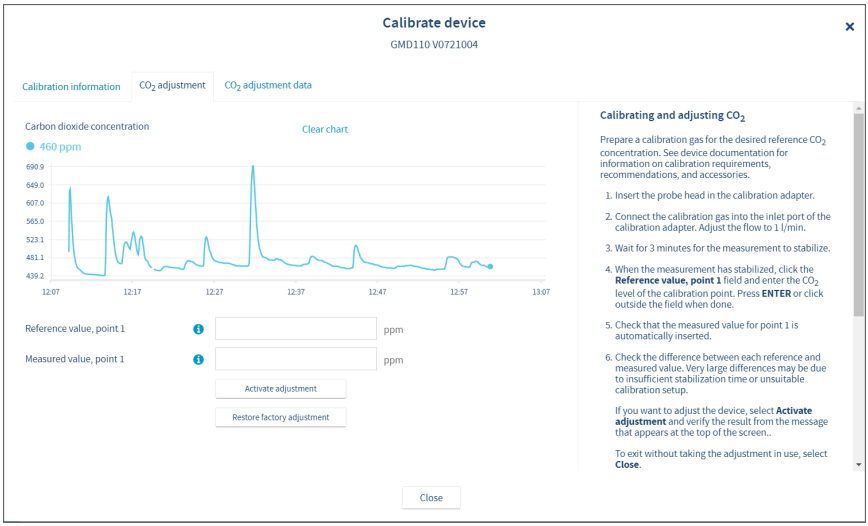

Figure 12 Insight calibration view

1. Connect the transmitter to Insight. See Connecting to Insight PC software (page 20).
2. Select ⚙ **> Calibrate > CO_2 adjustment**.
3. Insert the probe head in the calibration adapter.
4. Connect the calibration gas into the inlet port of the calibration adapter. Adjust the flow to 1 l/min.
5. Wait for 3 minutes for the measurement to stabilize.
6. When the measurement has stabilized, click the **Reference value, point 1** field and enter the CO_2 level of the calibration point. Press **ENTER** or click outside the field when done.
7. Check that the measured value for point 1 is automatically inserted.

> If you have a previously measured value that you want to use for adjustment (for example, from a 3rd party calibration report), you can manually replace the automatically inserted measured value.

8. Check the difference between reference and measured value. Very large differences may be due to insufficient stabilization time or unsuitable calibration setup.
9. If you want to adjust the device, select **Activate adjustment** and verify the result from the message that appears at the top of the screen.
10. To exit without taking the adjustment in use, select **Close**.

After adjusting your device, update the information in the **Calibration information** tab.

4.6 Setting filtering factor with Insight

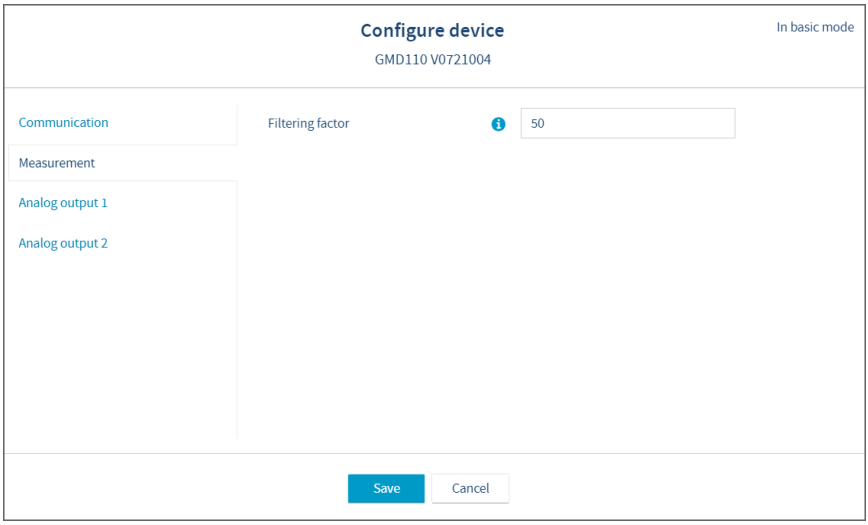

Figure 13 Filtering factor configuration view

1. Select ⚙ **> Configure device > Measurement > Filtering factor**.
2. Enter a filtering factor below 100 to apply filtering to the output (range: 1 ... 100).

> Examples of the effect of filtering on output:
> - Filtering factor 100 = No filtering, the latest measurement is output directly without integrating previous measurements.
> - Filtering factor 50 = The reading output integrates 50% of the previous measurement with the latest measurement.
> - Filtering factor 10 = The reading output integrates 90% of the previous measurement with the latest measurement.

3. Select **Save** when done and exit with **Cancel**.

5. Using transmitter with Indigo80 handheld indicator

5.1 Indigo80 handheld indicator

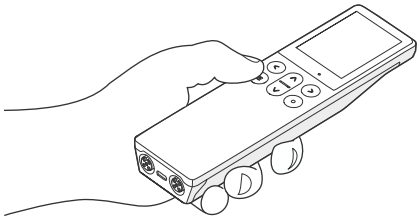

Figure 14 Indigo80 handheld indicator

Vaisala Indigo80 Handheld Indicator is a portable diagnostics tool that accommodates up to two Vaisala Indigo-compatible probes or transmitters for measuring a wide range of parameters.

With the indicator, you can:

- See real-time measurements and device and status information
- Log measurement data
- Calibrate and adjust the probe
- Configure the analog outputs

The help tours in the indicator's user interface guide you through the key features of the indicator. You can access the tours in the **Help** menu by pressing the ☰ button.

For more information on using the indicator, for example, editing the measurement views and performing data logging, see Indigo80 User Guide (M212722EN).

5.1.1 Indigo80 keypad

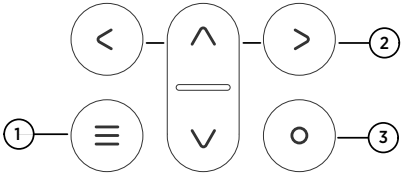

Figure 15 Indigo80 keypad

1 Power on/off and main menu button
2 Arrow buttons for navigating menus and scrolling views
3 Select button for selecting items in the user interface

5.1.2 Indigo80 main menu

Pressing the ☰ button while navigating the Indigo80 menus and views opens the main menu.

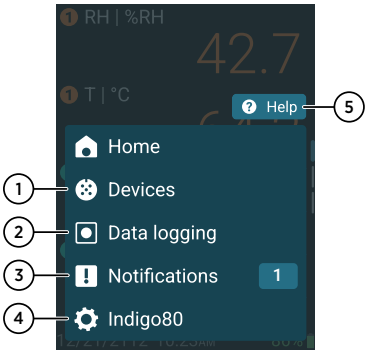

Figure 16 Indigo80 main menu

1 **Devices** menu contains, for example, options related to sensor purge, calibration, and environment settings (depending on the connected device).
2 **Data logging** menu for setting logging interval and duration, and browsing data files.
3 **Notifications** menu displays notifications related to Indigo80 and the connected devices.
4 **Indigo80** menu for changing the settings of Indigo80 (for example, date, time, and language) and viewing device information.
5 **Help** menu contains a **Getting started** tour showing the key features of Indigo80, as well as instructions for sending devices to Vaisala for calibration and maintenance.

5.2 Connecting to Indigo80 handheld indicator

- Crosshead screwdriver
- M12 - M8 service cable (Vaisala item code 262195)

CAUTION! The service port connection is only intended for temporary use during configuration, and must not be used for permanent installations.

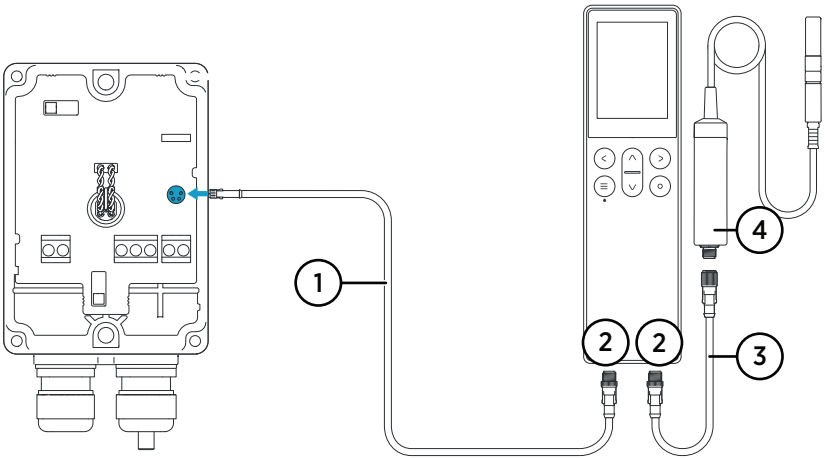

Figure 17 Connecting GMD110 transmitter to Indigo80 handheld indicator

1 M12 - M8 service cable
2 M12-5F ports on the bottom of Indigo80 for connecting compatible Vaisala devices. Ports are labeled ❶ and ❷.
3 Probe connection cable
4 Probe connected to Indigo80

1. Open the 4 screws on the transmitter cover and remove the cover.
2. Check the position of the output mode switch. The output mode switch must be set to **Digital** to enable the service port. If the switch was set to analog, remember to set it back to analog when you don't use the service port anymore.
3. Connect the M8 end of the service cable to the service port.

4. Connect the M12 end of the cable to the desired port on the bottom of the indicator. You can select the port freely based on your set of connected devices.
   - **Note the orientation of the cable connector when inserting it**
   - **Hold the connector in place while turning its locking ring clockwise – never twist the connector body!**

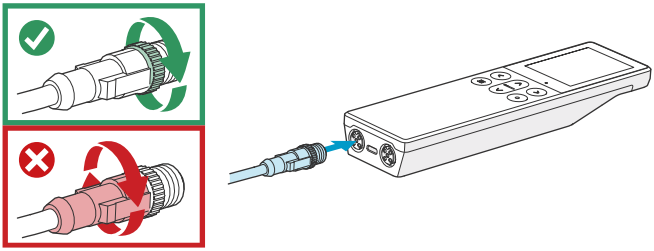

5.3 Configuring transmitter features with Indigo80 handheld indicator

- Crosshead screwdriver
- M12 - M8 service cable (Vaisala item code 262195)

You can use the Indigo80 handheld indicator to configure transmitter features such as filtering factor, analog outputs, and communication.

1. Check the position of the output mode switch. The output mode switch must be set to **Digital** to enable the service port. If the switch was set to analog, remember to set it back to analog when you don't use the service port anymore.
2. Connect the transmitter to the indicator.
3. Open the main menu by pressing ☰.
4. Select **Devices**. If you have more than one device connected to the indicator, make a further selection between the devices.
5. Select **Settings** to access and change the features available for the transmitter.
6. Exit the menu by pressing ⮜ or return to the main menu by pressing ☰.

5.4 CO2 adjustment with Indigo80

- Crosshead screwdriver
- M12 - M8 service cable (Vaisala item code 262195)

1. Connect the transmitter to the indicator.
2. Wait for the indicator to detect the transmitter.
3. Open the main menu by pressing ☰.
4. Select **Devices**. If you have more than one device connected to the indicator, make a further selection between the devices.
5. Select **Calibrate / Adjust**.
6. Select **CO_2 adjustment**.
7. Place the probe to the reference point and select **Reference value, point 1** to open the stabilizing graph view. Wait for the measurement to stabilize fully.
   a. When the reading has stabilized, press >.
   b. Use the arrow buttons to set the value of the reference, and then select **OK** or **Set**.
8. In **CO_2 adjustment** view, check the difference between each reference and measured value. Very large differences may be due to insufficient stabilization time or unsuitable calibration setup.
   - To store the adjustments to the probe, scroll down and select **Activate adjustment > OK**. Confirm by selecting **OK**.
   - To exit without taking the adjustment in use, press ☰ to end calibration.
9. Update the calibration information in **Calibrate / Adjust > Calibration information**. Navigate to the **Calibration information** menu by pressing <.
10. Press ☰ to end calibration.

6. Using transmitter with MI70 handheld indicator

6.1 Overview of MI70 support

The MI70 handheld indicator is a convenient service tool for viewing the measurement readings and performing calibration and adjustment. MI70 is used as the display and configuration tool in, for example, the HM70 handheld humidity and temperature meter, and is also compatible with various Vaisala probes and transmitters.

You can use the MI70 indicator for the following tasks with GMD110:

- Measurement viewing and logging
- Calibration and 1-point adjustment
- Viewing information about the transmitter (serial number, software version, last adjustment date)

To connect GMD110 to an MI70 indicator, you need the optional MI70 connection cable (Vaisala order code 219980SP).

6.2 Connecting to MI70 handheld indicator

- Crosshead screwdriver
- MI70 connection cable (Vaisala order code 219980SP)

CAUTION! The service port connection is only intended for temporary use during configuration, and must not be used for permanent installations.

1. Open the 4 screws on the transmitter cover and remove the cover.
2. If the MI70 handheld indicator is on, turn it off.
3. Check the position of the output mode switch. The output mode switch must be set to **Digital** to enable the service port. If the switch was set to analog, remember to set it back to analog when you don't use the service port anymore.
4. Connect the MI70 connection cable 219980SP to the service port.
5. Connect the MI70 connection cable to the desired port on the bottom of the indicator. You can select the port freely based on your set of connected devices.
6. Turn on the MI70 indicator (time and date are requested at first startup). MI70 detects GMD110 and proceeds to show the measurement screen. MI70 will start to show valid measurement results from GMD110 after a few seconds.

6.3 Basic display

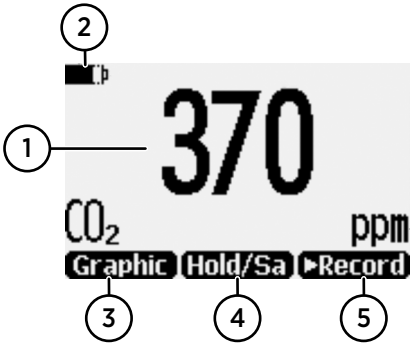

Figure 18 MI70 basic display

1. Measured parameter and compensations (up to three items on display simultaneously). You can change the shown items in **Main menu > Display > Quantities and units**.
2. Battery indicator. Shows current status (charge) of the battery.
3. Function key **Graphic** shows the readings as a curve.
4. Function key **Hold/Save** freezes the display and you can save the reading in the MI70 memory.
5. Function key **Record** is a quick access to the **Recording/Viewing** menu.

You can change the default function key shortcuts (**Graphic**, **Hold/Save**, **Record**) to other menus or functions in **Main menu > Settings > User interface > Program shortcut keys**.

6.4 Graphical display

The graphical display shows you the measurements as a curve (the curve of the uppermost parameter shown in the basic display). From the curve you can examine the data trend and history of the last minutes.

To open the graphical display, select **Graphic** in the basic display or select **Main menu > Display > Graphic history > Show**.

To get the statistical info on the graph area (minimum, maximum, and average values), press **Info**.

To get the curve of the other selected parameters, press **Next**. To get the curves of all the parameters, press **Next** until the text **All** appears, and then select **All**.

To zoom in and out, press the up/down arrow buttons.

To move back and forward in the timeline, use the left/right arrow buttons.

6.5 Main menu

In the main menu, you can configure the MI70 settings and basic display options, view information about the probe, access recordings and clear the memory, set alarms, start adjustments, and use the analog output option of the MI70 indicator.

To open the main menu and navigate in the menus:

1. Go to the basic display.
2. Press any arrow button, then select ⊖ **Open** (must be pressed within 5 seconds or the indicator returns to the basic display).
3. Move in the menus using the ▲ ▼ buttons.
4. Select an item with the ▶ button.
5. To return to the previous level, press ◀.
6. To return to normal operation, press ⊖ **Exit**.

6.6 Holding and saving the display

With the **Hold/Save** function, you can freeze a certain display reading. This reading can be saved in the MI70 memory and it will be available even after MI70 is disconnected from the transmitter.

1. In the basic display, select **Hold/Save**. Alternatively, select **Main menu > Display > Hold/Save display > Hold**.
2. Press **Save**.
3. To view the saved display, go to basic display and select **Record > View recorded data**. Alternatively, select **Main menu > Recording/Viewing > View recorded data**.

   A list of saved displays and data recordings appears. The icons on the left of the date and time indicate whether the file is a saved display or a longer recording of data:

   Saved display

   Data recording

4. Select the saved display based on date and time by pressing the right arrow button.

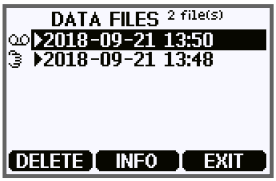

6.7 Recording data

With MI70, you can record transmitter measurement data over a certain period at chosen intervals. These recordings are saved in the MI70 memory and are available even after MI70 is disconnected from the transmitter. To start recording, select the **Record** function key in the basic display, or navigate to the recording menu: **Main menu > Recording/Viewing > Record data**.

7. Maintenance

7.1 Cleaning

You can clean the transmitter and probe body by wiping them with a moist cloth. Standard cleaning agents can be used.

When cleaning, follow these precautions:

- Do not immerse the probe in liquid to clean it.
- Be careful not to block the filter when cleaning the probe. The optional sintered PTFE filter is especially sensitive to blockage.

7.2 Changing the filter

Change the filter to a new one if it shows visible signs of contamination or dirt. When changing the filter, use clean gloves to avoid blocking the pores of the new filter.

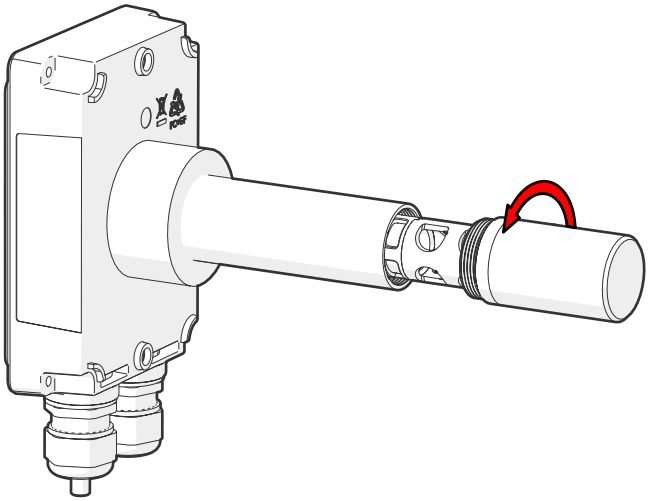

Figure 19 Opening the filter

CAUTION! When changing the filter, you can use clean instrument air to gently blow any loose dirt and filter material from the sensor. Do not attempt to clean the optical surfaces in any other manner.

7.3 Calibration and adjustment

GMD110 supports adjustment of the CO_2 measurement in 1 point. Note the following:

- For the best result, use a calibration gas with a CO_2 concentration that is close to the average CO_2 level of the intended measurement environment. Depending on the concentration of the gas, the transmitter will automatically adjust either the offset or gain of the measurement.
- GMD110 does not use configurable environmental compensation so it is not necessary to adjust the device settings before calibration.

Performing an accurate calibration and adjustment takes some time and preparation. Instead of doing it yourself, you can also have a Vaisala Service Center calibrate and adjust your transmitter.

Calibration means comparing the measurement output of the device to a known reference, such as a known environment in a calibration chamber or the output of a reference instrument. Correcting the reading of the device so that it measures accurately is referred to as **adjustment**.

More information

- CO2 adjustment in Insight (page 23)
- CO2 adjustment with Indigo80 (page 30)

7.3.1 Calibration setup

Using handheld meter as reference

You can perform a 1-point calibration using a handheld meter as a reference. You will need a calibrated reference instrument to compare against, for example an Indigo80 Handheld Indicator with a calibrated GMP252 probe.

With the transmitter and the reference instrument in the same space, allow the measurement to stabilize before comparing the readings. Try to provide as stable an environment as you can during this time. Avoid working around the transmitter and reference instrument during stabilization.

Using calibration gas as reference

There are two easy ways to use a calibration gas as a reference:

- You can supply the gas to the transmitter using the calibration adapter accessory (Vaisala item code DRW244827SP). Gas flow should be in the range 0.5 ... 1.1 l/min, recommendation is 1 l/min. Allow the measurement to stabilize for three minutes before starting the calibration.
- You can fill the entire measurement environment with the calibration gas. You can use calibration gas a reference by inserting the transmitter in a suitable chamber and filling that chamber with the calibration gas.

When supplying the gas from a gas bottle, make sure the gas bottle has stabilized to room temperature before starting.

7.3.2 Limits of adjustment

The transmitter limits the amount of adjustment that is allowed to the CO_2 measurement. The maximum correction that you can apply is 1000 ppm + 25 % of the transmitter's uncorrected reading. Previous user adjustments do not affect this limit (the correction is not cumulative). This feature limits the possible error introduced by incorrect adjustment.

For example, if you are adjusting using a 5000 ppmCO_2 calibration gas, the maximum correction you can apply is approximately 2250 ppm. Attempting to apply a greater adjustment will fail with a notification from the transmitter.

7.3.3 DRW244827SP calibration adapter

The optional calibration adapter accessory can be used to feed a reference gas to the transmitter through a gas port when calibrating. Gas flow should be in the range 0.5 ... 1.1 l/min, recommendation is 1 l/min. Allow the measurement to stabilize for three minutes before starting the calibration.

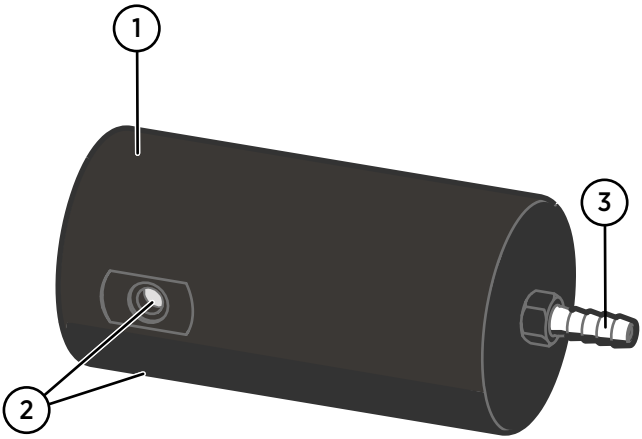

Figure 20 DRW244827SP calibration adapter

1 O-ring inside the adapter
2 Gas outlet on each side of the adapter
3 Gas port (port outer diameter 4.6 mm, port hole inner diameter 2 mm, suitable for tubing with 4 mm inner diameter)

8. Troubleshooting

8.1 Problem situations

Problem	Possible cause	Remedy
CO_2 measurement output seems incorrect.	Installation location is not representative of actual conditions you want to measure.	Verify the installation location and relocate the transmitter if necessary. See Duct mounting overview (page 13).
	Condensation on the sensor.	Remove the filter and check if condensation has formed on the sensor. If yes, dry out the condensation with instrument air and insert a new dry filter. Keep the transmitter powered and operating to prevent re-occurrence.
	Unsuitable operating environment.	Verify that the operating environment is within specified operating limits. See GMD110 specifications (page 42).
	CO_2 measurement has drifted.	Calibrate and adjust the transmitter.
Analog output reading is unchanging and appears incorrect.	Analog output is in error state.	Remove the cause of the error state and the analog output will recover its normal function. See Analog output error state (page 40).
	Output mode switch is set to digital mode and analog output is disabled.	Move the switch to the analog output position. See GMD110 transmitter parts (page 10) for the location of the switch.
Unable to access transmitter on the RS-485 line.	Incorrect wiring.	Check that the RS-485 connection is wired correctly. See Wiring (page 16).
	Output mode switch is set to analog mode.	Move the switch to the digital output position.
Intermittent problems or corrupted data in RS-485 communication.	RS-485 line not properly terminated and biased.	Check that the RS-485 line is terminated and biased properly. See RS-485 termination and biasing (page 18).

Problem	Possible cause	Remedy
Unable to connect to the transmitter using the service port.	Output mode switch is set to analog mode.	Move the switch to the digital output position. Remember to move the switch back to the analog position when you are done using the service port.

8.2 Error messages

Devices can communicate with error messages when they are connected to an Indigo transmitter or Insight software. The messages are categorized according to the severity of the status:

- **Critical errors** are fatal to the operation of the device. It may not be able to respond to communication at all, and will not measure correctly.
- **Errors** prevent normal operation of the device. Depending on the problem, errors may resolve themselves. For example, a completely wet humidity sensor may cause a humidity measurement error.
- **Warnings** do not prevent normal operation but may indicate possible problems.
- **Status** indicates a known state of the device.

Table 4 GMD110 error messages

Error message	Description	Recommended action
Critical errors		
Firmware checksum mismatch. [49]	The installed firmware is corrupted.	Contact Vaisala technical support.
Device settings corrupted. [50]	Parameter memory is corrupted.	
Errors		
Supply voltage out of range. [55]	Transmitter supply voltage is too high or low.	Check and correct the supply voltage.
Sensor signal low. [209]	The optical signal level is insufficient for accurate measurement. Can be caused by significant dirt or condensation on the optical surfaces.	Remove the filter and inspect the visible sensor surfaces for condensation and contamination. You can blow on the sensor with instrument air to dry the condensation and dislodge loose dirt. If the error persists, contact Vaisala technical support.
Measurement signal out of range. [211]	Measured CO_2 concentration is too high.	Wait for CO_2 concentration to fall into measurable range.

Errors		
Sensor signal distorted. [210]	Hardware fault.	Contact Vaisala technical support.
Internal voltage out of range. [208]		
Sensor heater failure. [212]		
Infrared source temperature out of range. [213]		
Warnings		
Sensor signal low. [209]	Low optical signal level. Can be caused by dirt or condensation on the optical surfaces.	When this message appears as a warning, measurement is still possible and you can continue using the transmitter normally. However, maintenance is likely required soon.
Unexpected device restart. [216]	The transmitter has automatically restarted itself.	Check that supply voltage is stable and operating environment is within specification.
Status messages		
Calibration is about to expire. [352]	This message is displayed by the calibration reminder functionality.	Calibrate the transmitter and update the calibration date information.
Calibration has expired. [353]	This warning is displayed by the calibration reminder functionality if the calibration interval has been exceeded.	

8.3 Analog output error state

The transmitter sets the analog output channel into a defined error level instead of the measured result in two situations:

- Transmitter detects a measurement malfunction. This means an actual measurement problem, such as sensor damage or unsuitable environmental conditions.
- The measured value is significantly outside the scaled output range.

The default error level depends on the output type:

Output	Default error level
0 ... 20 mA	23 mA
4 ... 20 mA	2 mA

Output	Default error level
0 ... 5 V	0 V
0 ... 10 V	0 V

The transmitter resumes normal operation of the analog output when the cause of the error state is removed.

9. Technical data

9.1 GMD110 specifications

Table 5 GMD110 measurement performance

Property	Description/value
Measurement range	0 ... 10 000 ppm CO_2 Orderable with analog output scaled to 0 ... 2000 ppm, 0 ... 5000 ppm, or 0 ... 10 000 ppm
Accuracy [1)]	
0 ... 3000 ppm CO_2	±40 ppm CO_2
3000 ... 10 000 ppm CO_2	±2 % of reading
Calibration uncertainty	
at 2000 ppm CO_2	±31 ppm CO_2 (typical)
at 10 000 ppm CO_2	±105 ppm CO_2 (typical)
Long-term stability	
0 ... 3000 ppm CO_2	±60 ppm CO_2/year
3000 ... 6000 ppm CO_2	±150 ppm CO_2/year
6000 ... 10 000 ppm CO_2	±300 ppm CO_2/year
Temperature dependence 0 ... 10 000 ppm CO_2	
−10 ... +50 °C	±0.05 % of reading/°C
−40 ... +60 °C	< ±0.1 % of reading/°C
Pressure dependence	
Typical	+0.15 % of reading/hPa
Start-up, warm-up, and response time	
Start-up time at +25 °C	< 12 s
Warm-up time for full specification	< 2 min
Response time (T_{90})	< 1 min

1) At 25 °C and 1013 hPa (incl. repeatability and non-linearity).

Table 6 GMD110 operating environment

Property	Description/value
Operating temperature	−20 ... +60 °C (−4 ... +140 °F)
Storage temperature	−40 ... +60 °C (−40 ... +140 °F)
Humidity	0 ... 95 %RH, non-condensing
Condensation prevention	Sensor head heating when power on
IP rating	IP65: Dust-tight. Protected from water jets from any direction.

Table 7 GMD110 inputs and outputs

Property	Description/value
Output parameter	Carbon dioxide (ppm)
Output modes	0/4 ... 20 mA, scalable, max. load 500 Ω 0 ... 5/10 V, scalable, min. load 10 kΩ RS-485 with Modbus RTU
Power consumption	0.5 W typical, 1.1 W max.
Supply voltage	
With current output	20 ... 30 V DC
With voltage output or RS-485	12 ... 30 V DC
Digital communication	
Interface	RS-485, non-isolated, no line termination
Default serial settings	19200 bps N 8 2
Protocol	Modbus RTU
Modbus device address	240
Service port	
Connector	M8 4-pin male
Compatibility	• Indigo80 handheld indicator [1)] • MI70 handheld indicator [2)] • Vaisala Insight PC software [3)]

1) *Requires M12-M8 cable 262195SP.*
2) *Requires connection cable 219980SP.*
3) *Requires USB adapter USB2 with M12-M8 cable 262195SP. Vaisala Insight software for Windows is available at www.vaisala.com/insight.*

Table 8 GMD110 compliance

Property	Description/Value
EU directives and regulations	EMC Directive (2014/30/EU) RoHS Directive (2011/65/EU) amended by 2015/863
Electromagnetic compatibility (EMC)	EN 61326-1, basic electromagnetic environment
Compliance marks	CE, RCM

Table 9 GMD110 mechanical specifications

Property	Description/value
Probe diameter	25 mm (0.98 in)
Probe length	126 mm (4.96 in)
Weight	215 g (0.47 lb)
Screw terminal wire size	0.5 ... 2.5 mm^2 (AWG 24 ... 14)
Housing color	White (RAL9003)
Mounting methods	Screws or optional mounting flange 243261SP
Materials	
Probe	PBT polymer
Probe filter	PTFE
Housing	PC + 10 %GF (UL-V0 approved)

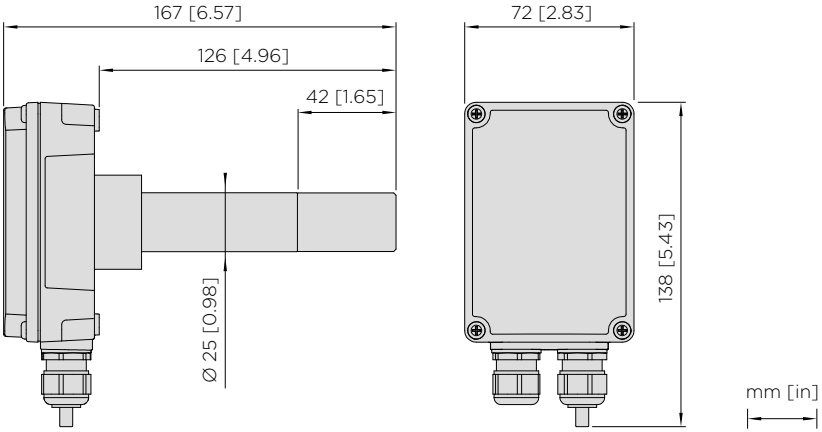

Figure 21 GMD110 dimensions

9.2 Accessories and spare parts

Table 10 GMD110 accessories and spare parts

Item	Item code
Probe mounting flange	243261SP
Conduit fitting + O-ring (M16 × 1.5 / NPT1/2")	210675SP
Conduit fitting + O-ring (M16 × 1.5 / PG9, RE-MS)	210674SP
USB adapter for Insight and M12 - M8 cable	USB2 and 262195SP
Connection cable for GM70 (MI70) handheld meter	219980SP
Calibration adapter	DRW244827SP
Porous sintered PTFE filter	DRW244221SP

9.3 243261SP mounting flange dimensions

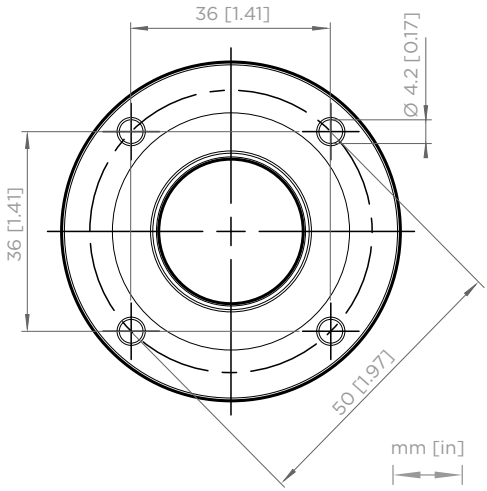

Figure 22 243261SP mounting flange dimensions

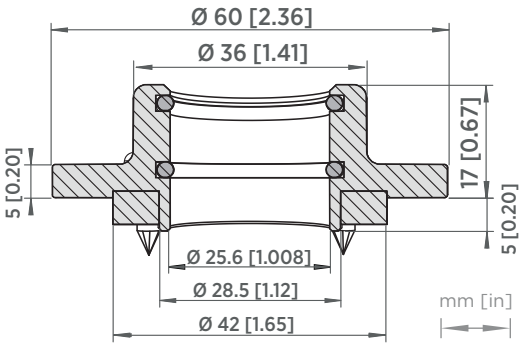

Figure 23 243261SP mounting flange dimensions, cross section

Appendix A. Modbus reference

A.1 Default communication settings

Table 11 Default Modbus serial communication settings

Property	Description/Value
Serial bit rate	19200
Parity	N
Number of data bits	8
Number of stop bits	2
Modbus device address	240

A.2 Function codes

Table 12 Modbus function codes

Function code (decimal)	Function code (hexadecimal)	Name
03	03_{hex}	Read Holding Registers
16	10_{hex}	Write Multiple Registers
43/14	$2B_{hex}$ / $0E_{hex}$	Read Device Identification

A.3 Data encoding

In the data registers, the numeric values are available in one or two formats with separate register addresses: 32-bit IEEE floating point format and/or 16-bit signed integer format.

A.3.1 32-bit floating point or 32-bit integer format

Registers using **32-bit float** data format are encoded using the **binary32** encoding defined in IEEE 754. The format is also known as "single-precision floating point format".

The least significant 16 bits of a floating point number are placed at the Modbus register listed in the table, while the most significant 16 bits are placed in the register with number/address + 1, as specified in Open Modbus TCP Specification, Release 1.0. This is also known as "little-endian" or "Modicon" word order.

Despite the specification, some Modbus masters may expect a "big-endian" word order (most significant word first). In such case, you must select "word-swapped" floating point format in your Modbus master for the Modbus registers of the device.

A complete 32-bit floating point or 32-bit integer value should be read and written in a single Modbus transaction.

CAUTION! Reading the measurement data registers with incorrect floating point format setting may occasionally result in correct-looking, but nevertheless incorrect values.

It is highly recommended to verify that you have configured the floating point format correctly on your Modbus host system by reading a floating point value from a test value register.

A.3.2 16-bit integer format

Some 16-bit integer values in the data registers are scaled to include the necessary decimals. The scaling factors for those values are shown in the register tables.

Table 13 Interpretation of 16-bit signed integer values

Value (decimal)	Value (hexadecimal)	Description
0 ... 32766	0000_{hex} ... $7FFE_{hex}$	Value in range 0 ... 32766
32767	$7FFF_{hex}$	Value is 32767 or larger
32768	8000_{hex}	Value is not available
32769	8001_{hex}	Value is −32767 or smaller
32770 ... 65535	8002_{hex} ... $FFFF_{hex}$	Value in range −32766 ... −1 (2's complement)

A.4 Modbus registers

Registers are numbered in decimal, starting from 1. Register addresses in actual Modbus messages (Modbus Protocol Data Unit (PDU)) are in hexadecimal and start from zero. Register number 1 corresponds to address 0_{hex} in the actual Modbus message.

CAUTION! Reading the wrong register(s) may result in correct-looking values. Check the reference documentation of your Modbus host (PLC) to verify which notation it uses for Modbus register addresses.

A.4.1 Measurement data registers

Table 14 Modbus measurement data registers (read-only)

Register number	Address	Description	Data format	Unit
1	0000_{hex}	Measured CO_2 value	32-bit float	ppm
3	0002_{hex}	Compensation T	32-bit float	°C
5	0004_{hex}	Measured T	32-bit float	°C
257	0100_{hex}	Measured CO_2 value	16-bit signed integer	ppm (up to 32 000 ppm)
258	0101_{hex}	Measured CO_2 value	16-bit signed integer	ppm [1)] (scaled, up to approx. 320 000 ppm)

1) *The ppm output of the second Measured CO_2 value register (number 258) is scaled and must be multiplied by 10.*

A.4.2 Configuration registers

Table 15 Modbus configuration data registers (writable)

Register number	Address	Description	Data format	Unit / Valid range
769	0300_{hex}	Modbus address	16-bit integer	Valid range 1 ... 247 (default: 240)
770	0301_{hex}	Serial speed	enum	Valid range 4800 ... 115200 0 = 4800 1 = 9600 2 = 19200 3 = 38400 4 = 57600 5 = 115200 (default: 2 (19200))
771	0302_{hex}	Serial parity	enum	0 = None 1 = Even 2 = Odd (default: 0 (None))
772	0303_{hex}	Serial stop bits	16-bit integer	Valid range 1...2 (default: 2)

Register number	Address	Description	Data format	Unit / Valid range
777	0308_{hex}	CO_2 filtering factor	16-bit integer	Valid range 0 ... 100 (default: 100 (no filtering)). For information on setting the filtering factor, see Filtering factor (page 51).

A.4.3 Status registers

Table 16 Modbus status registers (read-only)

Register number	Address	Description	Data format	Notes
2049	0800_{hex}	Device status	16-bit	0 = Status OK. 1 = Critical error. 2 = Error. 4 = Warning.
2050	0801_{hex}	CO_2 status	16-bit	0 = Status OK. 2 = CO_2 reading not reliable. Appears during transmitter start-up. 256 = Measurement not ready. Appears during transmitter start-up.

Multiple statuses can be present simultaneously. In those cases, the value of the status register is the sum of the status values. For example, the value of the device status register is **6** if a warning (**4**) and an error (**2**) are present simultaneously.

A.5 Device identification objects

Table 17 Device identification objects

Object ID	Object ID (hexadecimal)	Object name	Example contents
0	00_{hex}	VendorName	"Vaisala"
1	01_{hex}	ProductCode	GMD110
2	02_{hex}	MajorMinorVersion	"1.2.3" Software version of the device.

Object ID	Object ID (hexadecimal)	Object name	Example contents
3	03_{hex}	VendorUrl	"http://www.vaisala.com/"
4	04_{hex}	ProductName	"GMD110 Duct Carbon Dioxide Transmitter"
128	80_{hex}	SerialNumber [1)]	"K0710040"
129	81_{hex}	CalibrationDate [1)]	"2020-01-31" Calibration date in YYYY-MM-DD format. Empty string if not set/valid.
130	82_{hex}	CalibrationText [1)]	"Vaisala/HEL" Calibration information text. Empty string if not set/valid.

1) Vaisala-specific device information.

A.6 Exception responses

Table 18 Modbus exception responses

Code	Name	Reason
01	ILLEGAL FUNCTION	Unsupported function code
02	ILLEGAL DATA ADDRESS	Register address or Object ID out of valid ranges
03	ILLEGAL DATA VALUE	Otherwise invalid request

Accessing unavailable (temporarily missing) measurement data does not generate a Modbus exception. “Unavailable” value (a quiet NaN for floating point data or 8000_{hex} for integer data) is returned instead. An exception is generated only for any access outside the applicable register ranges.

A.7 Filtering factor

Modbus register 777 sets the CO_2 filtering factor.

The filtering factor affects the speed at which the latest CO_2 measurement is integrated into the output of the probe. A new measurement is produced approximately every two seconds.

By default, the filtering factor is set to 1.0, which means the latest measurement is shown directly in the output, without any filtering. If the measuring environment produces occasional exceptionally high or low readings that need to be averaged out in the output, filtering can be applied.

To apply filtering, you need to set a filtering factor that determines how much the previous measurements affect the calculation of measurement output. For example, when using filtering factor of 0.1, the new output is a combination of previous measurements (90 %) and the latest measurement (10 %).

Examples of the effect of filtering on output:

- Filtering factor 1.0 = No filtering, the latest measurement is output directly without integrating previous measurements.
- Filtering factor 0.5 = The reading output shows ~75 % of the measurement change after two 2-second measurement cycles and ~93 % after four cycles.
- Filtering factor 0.1 = The reading output shows ~90 % of the measurement change after 22 measurement cycles.

The configuration range of the filtering factor is 0 ... 100 in the 16-bit register: for example, to set the factor to 0.5, set the value of the register to 50.

The following formula is used when calculating the output:

$$o_{\text{new}} = o_{\text{old}} + (m_{\text{new}} - o_{\text{old}}) \times f$$

o_{new}	New output
o_{old}	Previous output
m_{new}	New measurement
f	Filtering factor

Maintenance and calibration services

Vaisala offers comprehensive customer care throughout the life cycle of our measurement instruments and systems. Our factory services are provided worldwide with fast deliveries. For more information, see www.vaisala.com/calibration.

- Vaisala Online Store at store.vaisala.com is available for most countries. You can browse the offering by product model and order the right accessories, spare parts, or maintenance and calibration services.
- To contact your local maintenance and calibration expert, see www.vaisala.com/contactus.

Technical support

Contact Vaisala technical support at helpdesk@vaisala.com. Provide at least the following supporting information as applicable:

- Product name, model, and serial number
- Software/Firmware version
- Name and location of the installation site
- Name and contact information of a technical person who can provide further information on the problem

For more information, see www.vaisala.com/support.

Warranty

For standard warranty terms and conditions, see www.vaisala.com/warranty.
Please observe that any such warranty may not be valid in case of damage due to normal wear and tear, exceptional operating conditions, negligent handling or installation, or unauthorized modifications. Please see the applicable supply contract or Conditions of Sale for details of the warranty for each product.

Recycling

Recycle all applicable material according to local regulations.

VAISALA

www.vaisala.com

AKRIBIS · www.akribis.info · contacto@akribis.info